CATERPILLAR®

SEBP2478-35
May 2002

VOLUME I
Pages 1-676

Parts Manual

SIS

See "General Information" for New Parts Manual Features.

D10R Track-Type Tractor

3KR1-Up (Machine)
80M1-Up (Engine)
1LY1-Up (Transmission)
4KP1-Up (Bulldozer)
4LP1-Up (Bulldozer)
2YP1-99999 (Ripper)
4PP1-Up (Ripper)
5LP1-99999 (Ripper)
7KP1-Up (Ripper)
BEY1-Up (Ripper)
BRT1-Up (Ripper)
9EA1-Up (Winch)
3TT1-Up (Torque Converter)

Powered By 3412 Engine

Product and Dealer Information

Note: For product identification plate locations, see the section “Product Identification Information” in the Operation and Maintenance Manual.

Delivery Date: _____

Product Information

Model: _____

Product Identification Number: _____

Engine Serial Number: _____

Transmission Serial Number: _____

Generator Serial Number: _____

Attachment Serial Numbers: _____

Attachment Information: _____

Customer Equipment Number: _____

Dealer Equipment Number: _____

Dealer Information

Name: _____ Branch: _____

Address: _____

_____

_____

	Dealer Contact	Phone Number	Hours
Sales:			
Parts:			
Service:			

Informations produit et concessionnaire

Nota: Voir l'emplacement de la plaque signalétique du produit au chapitre "Informations produit" du guide d'utilisation et d'entretien.

Date de livraison: _____

Informations produit

Modèle: _____

Numéro d'identification produit: _____

Numéro de série du moteur: _____

Numéro de série de la boîte de vitesses: _____

Numéro de série de l'alternateur: _____

Numéros de série d'équipement: _____

Informations sur l'équipement: _____

Numéro matériel client: _____

Numéro matériel concessionnaire: _____

Informations concessionnaire

Nom: _____ Agence: _____

Adresse: _____

_____

_____

	Contact concessionnaire	Numéro de téléphone	Heures
Ventes:			
Pièces:			
Service:			

Información del Producto/Distribuidor

Nota: Para saber la ubicación de las placas de identificación del producto, ver la sección “Información sobre identificación del producto” en el Manual de Operación y Mantenimiento.

Fecha de entrega: _____

Información del producto

Modelo: _____

Número de identificación del producto: _____

Número de serie del motor: _____

Número de serie de la transmisión: _____

Número de serie del generador: _____

Números de serie de los accesorios: _____

Información sobre los accesorios: _____

Número del equipo del cliente: _____

Número del equipo del distribuidor: _____

Información del distribuidor

Nombre: _____ Sucursal: _____

Dirección: _____

_____

_____

	Comunicación con el distribuidor	Número de teléfono	Horas
Ventas:			
Piezas:			
Servicio:			

Informações Sobre Produto e Revendedor

Nota: Para localizações da placa de identificação do produto, consulte a seção, “Informações Sobre Identificação do Produto” no Manual de Operação e Manutenção.

Data de Entrega: _____

Informações Sobre o Produto

Modelo: _____

Número de Identificação do Produto: _____

Número de Série do Motor: _____

Número de Série da Transmissão: _____

Número de Série do Gerador: _____

Números de Série de Acessórios: _____

Informações Sobre Acessórios: _____

Número do Equipamento do Cliente: _____

Número do Equipamento do Revendedor: _____

Informações Sobre o Revendedor

Nome: _____ Filial: _____

Endereço: _____

_____

_____

	Contato do Revendedor	Telefone	Horas
Vendas:			
Peças:			
Serviço:			

Produkt- und Händlerinformation

Anmerkung: Für die Lage der Produkt-Identnummer und Seriennummern siehe Abschnitt "Produkt-Identinformation" im Betriebs- und Wartungshandbuch.

Lieferdatum: _____

Produkt-Identinformation

Modell: _____

Produkt-Identnummer: _____

Seriennummer des Motors: _____

Seriennummer des Getriebes: _____

Seriennummer des Generators: _____

Seriennummern der Arbeitsgeräte: _____

Arbeitsgeräteinformation: _____

Kundennummer: _____

Händlernummer: _____

Händlerinformation

Name: _____ Niederlassung: _____

Adresse: _____

_____

_____

	Kontaktperson beim Händler	Telefon	Dienststunden
Verkauf:			
Ersatzteile:			
Service:			

MEMORANDA

TABLE OF CONTENTS

Name	Page
GENERAL INFORMATION	A26
REPAIR ALTERNATIVES	A45
SUPPLEMENTAL COOLANT ADDITIVES	A50
MAINTENANCE PARTS	A55
INDEX	A113
MACHINE ARRANGEMENT	1
ARCTIC AR	1
COLD WEATHER AR	1
ELECTRONICS AR-MACHINE	1
MACHINE AR-COLD WEATHER	2
MODIFICATION AR	2
SUPPRESSION AR-SOUND	3
WASTE HANDLING AR	4
ENGINE ARRANGEMENT	6
ENGINE AR	6
BASIC ENGINE	12
BELT TIGHTENER GP	12
CAMSHAFT GP	20
COVER GP-CYLINDER BLOCK	21
COVER GP-FLYWHEEL HOUSING	23
COVER GP-FRONT HOUSING	24
COVER GP-VALVE MECHANISM	26
CRANKSHAFT GP	28
CYLINDER BLOCK AS	34
CYLINDER BLOCK GP	38
CYLINDER HEAD AS	41
CYLINDER HEAD GP	45
DAMPER GP	56
DRIVE GP-FAN	57
FLYWHEEL GP	78
GEAR GP-FRONT	80
GEAR GP-REAR	82
HOUSING GP-FLYWHEEL	90
HOUSING GP-FRONT	92
LIFTING GP-ENGINE	94
PAN GP-OIL	96
PISTON & ROD GP	98
PLUG GP-CYLINDER BLOCK	100
PLUG GP-CYLINDER HEAD	102
PULLEY GP-CRANKSHAFT	103
ROCKER ARM GP	105
SUPPORT GP-ENGINE	106
TRUNNION GP-ENGINE	108
V-BELT SET	109
VALVE MECHANISM GP	110
YOKE GP	111
LUBRICATION SYSTEM	113
FASTENER GP-OIL PUMP MOUNTING	113
FILLER GP-ENGINE OIL	114
FUMES DISPOSAL GP	116
GAUGE GP-OIL LEVEL (DIPSTICK)	118
LINES GP-ENGINE OIL	120
LINES GP-OIL SUPPLY	124
LINES GP-TURBOCHARGER OIL	130
OIL CHANGE GP-HIGH SPEED	132
PRELUBRICATION AR-ENGINE	134
PUMP GP-ENGINE OIL	140
VALVE & MTG GP-FAN DRIVE	142
COOLING SYSTEM	143
COOLANT CONDITIONER GP	143
COOLER GP-ENGINE OIL	145
CORE GP-OIL COOLER	146
FAN AR	147
FAN AR-VARIABLE	148
FAN GP-BLOWER	150
FAN GP-VARIABLE PITCH	152
LINES GP-WATER	156
PUMP GP-WATER	169
RADIATOR GP	178
TANK GP-COOLANT	183
TANK GP-WATER	184
AIR INLET AND EXHAUST SYSTEM	192
AFTERCOOLER GP-WATER	192
AIR CLEANER GP	194
DUST EJECTOR GP	197
KIT-INSTALLATION	198
LINES GP-AIR	200
MANIFOLD GP-EXHAUST	204
MUFFLER GP	206
PRECLEANER AR	207
PRECLEANER GP	209
SHIELD GP-MANIFOLD	210
TURBOCHARGER GP	212
FUEL SYSTEM	216
ADAPTER GP-FAST FILL FUEL	216
CONTROL GP-DECELERATOR	228
DRIVE GP-UNIT INJ HYD PUMP	234
FILTER & LINES GP-FUEL	246
FILTER GP-FUEL	248
FILTER GP-WATER SEP & FUEL	252
INJECTOR GP-FUEL	255
KIT-SEAL	260
LINES GP-FUEL	262
LINES GP-FUEL FILTER	264
LINES GP-INJECTOR HYD PUMP	268
PUMP & MTG GP-UNIT INJ HYD	270
PUMP GP-FUEL INJECTION	286

TABLE OF CONTENTS

Name	Page
PUMP GP-FUEL PRIMING	291
PUMP GP-FUEL PRM & PRIM FILTER	292
PUMP GP-UNIT INJECTOR HYD	294
TANK GP-FUEL	308
VALVE GP-PRESSURE CONTROL	314
ELECTRICAL AND STARTING SYSTEM	315
ALARM GP	315
ALTERNATOR AR-CHARGING	316
ALTERNATOR GP-CHARGING	318
BATTERY & WIRING GP	328
CONTROL & MTG GP-ELECTRONIC	376
CONTROL & MTG GP-ENGINE ELEK	379
CONTROL GP-ELECTRONIC	381
CONTROL GP-ENG RATINGS ELEK	384
CONTROL GP-ENGINE ELECTRONIC	387
CONTROL GP-POWER TRAIN	391
CONTROL GP-UNPROGRAMMED	392
CONVERTER GP-ELECTRICAL	395
ELECTRONICS GP-POWER TRAIN	396
FASTENER AR-DISCONNECT KEY	397
HEATER GP-COOLANT	398
HEATER GP-FUEL	406
HEATER GP-JACKET WATER	410
JUNCTION BLOCK GP	413
LAMP GP-DOME	414
LAMP GP-FLOOD	415
LIGHTING AR	420
LIGHTING AR-REAR	424
LIGHTING GP	426
LIGHTING GP-AUXILIARY	427
LIGHTING GP-FLOOD	429
LIGHTING GP-FRONT	434
LIGHTING GP-REAR	439
LIGHTING GP-RIPPER	442
MAGNETIC PICKUP GP	443
SENSOR GP-ARC SUPPRESSOR	444
SENSOR GP-FUEL LEVEL	445
SENSOR GP-POSITION	446
SENSOR GP-PRESSURE	453
SENSOR GP-SPEED	463
SENSOR GP-TEMPERATURE	468
SERVICE GP-POWER TRAIN	471
SOLENOID AS-STARTING MOTOR	472
STARTING AID GP-ETHER	474
STARTING AR-COLD WEATHER	476
STARTING MOTOR GP-ELECTRIC	484
SWITCH GP-BYPASS	497
SWITCH GP-DISCONNECT	499
SWITCH GP-FLOW	500
SWITCH GP-HANDLE	502
SWITCH GP-START	503
SWITCH GP-TIMER	504
WIRING GP-CONSOLE	506
WIRING GP-ENGINE	520
WIRING GP-PLATFORM	522
WIRING GP-UNIT INJECTOR	530
POWER TRAIN	531
AXLE GP-POWER TRAIN	531
CASE & PARTS GP-PLANETARY	536
CONTROL & MTG GP-TRANSMISSION	538
CONTROL GP-TRANSMISSION HYD	540
COOLER GP-TRANSMISSION OIL	546
COUPLING GP-PUMP	547
DRAIN GP-ECOLOGY	548
FILTER GP-OIL	550
FINAL DRIVE GP	558
GEAR GP-BEVEL & TRANSFER	598
GUARD GP-DRIVE SHAFT	600
LINES GP-POWER TRAIN OIL	602
MANIFOLD & VALVE GP	626
MOUNTING GP-TRANSMISSION	628
PLANETARY GP-TRANSMISSION	630
PUMP GP-GEAR	634
SEGMENT GP-SPROCKET	639
SHAFT GP-MAIN DRIVE	641
TORQUE CONVERTER GP	642
TRANSMISSION AR	648
UNIVERSAL JOINT GP	649
VALVE & MTG GP-PILOT	650
VALVE GP-CONTROL	652
VALVE GP-MODULATING	660
VALVE GP-PRESSURE CONTROL	662
VALVE GP-PRIORITY	664
VALVE GP-RELIEF	666
VALVE GP-SELECTOR	670
VALVE GP-SOLENOID	671
VALVE GP-TRANSMISSION CONTROL	673
FRAME AND BODY	678
CASE & FRAME GP	678
COUNTERWEIGHT & BAR AR-REAR	684
COUNTERWEIGHT GP	686
COVER GP-TRUNNION	690
DRAWBAR GP	692
ENCLOSURE GP-ENGINE	694
ENCLOSURE GP-FENDER	700
FENDER AR	706
FENDER GP	708
GRID GP-SAND BLAST ERODING	713
GUARD AR-FINAL DRIVE	714
GUARD AR-HINGED	716
GUARD AR-IDLER	718
GUARD GP-BOTTOM	720
GUARD GP-PIVOT SHAFT	724
GUARD GP-RADIATOR	726
GUARD GP-REAR	730

TABLE OF CONTENTS

Name	Page
GUARD GP-ROCK	732
GUARD GP-SEAL	734
HOOD & GUARD GP	736
LATCH GP	741
UNDERCARRIAGE	742
BAR AR-STRIKER	742
BAR GP-EQUALIZER	746
BAR GP-STRIKER	762
CAP GP-TRACK IDLER	764
CAP GP-TRACK ROLLER	766
FRAME AS-TELESCOPING RECOIL	767
FRAME GP-TELESCOPING RECOIL	768
IDLER AR-TRACK	782
IDLER GP-TRACK	783
LINK AS-TRACK	792
LUBRICATION GP-EQUALIZER BAR	796
LUBRICATION GP-PIVOT SHAFT	798
ROLLER AR-TRACK CARRIER	802
ROLLER GP-TRACK-DOUBLE FLANGE	805
ROLLER GP-TRACK-SINGLE FLANGE	810
SUSPENSION GP-BOGIE	815
SUSPENSION GP	816
SUSPENSION GP-BOGIE	817
TRACK ADJUSTER & RECOIL GP	822
TRACK GP	836
UNDERCARRIAGE AR	838
STEERING AND BRAKING SYSTEM	844
ADJUSTER GP-STEER & TMSN CONT	844
CLUTCH & BRAKE GP-STEERING	848
CONTROL GP-BRAKE	852
CONTROL GP-PARKING BRAKE	858
CONTROL GP-STEERING & TMSN	860
DETENT GP	868
GEAR GP-STEERING	870
MANIFOLD & VALVE GP	874
SUPPORT GP-CONTROL	876
VALVE & MTG GP-STEERING	877
VALVE GP-CONTROL	878
VALVE GP-SOLENOID	880
HYDRAULIC SYSTEM	882
CARTRIDGE GP-VANE PUMP	882
CONTROL AR-DUAL TILT	884
CONTROL AR-HYDRAULIC	886
COOLER GP-HYDRAULIC OIL	893
COVER GP-HYDRAULIC TANK CAP	896
CYLINDER & LINES GP-DUAL TILT	897
CYLINDER AR-DUAL TILT	897
CYLINDER GP-BULLDOZER LIFT	898
CYLINDER GP-BULLDOZER TILT	902
CYLINDER GP-DUAL TILT	908
CYLINDER GP-RIPPER LIFT	912
CYLINDER GP-RIPPER PIN PULLER	924
CYLINDER GP-RIPPER TILT	926
LINES GP-ARCTIC	932
LINES GP-LIFT CYLINDER	934
LINES GP-PIN PULLER CYLINDER	937
LINES GP-PUMP	942
LINES GP-RIPPER	964
LINES GP-TILT	971
LINES GP-TILT CYLINDER	972
LINES GP-WINCH	986
PUMP & LINES AR	990
PUMP GP-GEAR	991
PUMP GP-VANE	994
TANK & FILTER GP-HYDRAULIC	998
VALVE & CYLINDER GP	1000
VALVE & MTG GP-CONTROL	1016
VALVE GP-BANK	1018
VALVE GP-BANK 3	1020
VALVE GP-BYPASS	1022
VALVE GP-CHECK	1023
VALVE GP-CONTROL	1024
VALVE GP-PILOT	1038
VALVE GP-PRESSURE CONTROL	1040
VALVE GP-QUICK-DROP	1041
VALVE GP-RELIEF	1043
VALVE GP-SELECTOR & PRESS CONT	1044
VALVE GP-SHUTTLE	1046
VALVE GP-SOLENOID	1047
VALVE GP-TILT CONTROL	1058
IMPLEMENTS	1060
BLOCK GP-PUSH	1060
BRACE GP-BULLDOZER	1064
BULLDOZER AR	1065
BYPASS GP-FILTER	1069
CASE GP-WINCH	1070
CLUTCH & GEAR GP	1074
CONTROL GP-TOWING WINCH	1082
CONTROL GP-WINCH	1086
COVER GP-SHIPPING	1088
FAIRLEAD GP-WINCH	1089
FRAME GP-RIPPER	1090
GEAR GP-ACCESSORY	1100
GUIDE GP-ROLLER	1101
INSTALLATION AR-WINCH	1102
KIT-OVERPACK	1102
LINK GP-STABILIZER	1106
LINKAGE GP-IMPLEMENT	1108
MOUNTING GP-CYLINDER	1114
MOUNTING GP-PUMP	1115
MOUNTING GP-RIPPER	1116
MOUNTING GP-WINCH	1124

TABLE OF CONTENTS

Name	Page
PULLER AR-PIN	1125
PULLER GP-PIN	1126
PUSH ARM GP	1130
PUSH ARM GP-LH	1131
PUSH ARM GP-RH	1132
RIPPER AR	1133
SCREEN GP-MAGNETIC	1136
TRUNNION AR-BULLDOZER	1138
TRUNNION GP-BULLDOZER	1142
VALVE GP-PRESSURE CONTROL	1144
VALVE GP-SELECTOR	1146
VALVE GP-WINCH CONTROL	1148
WORK TOOLS	1149
BIT GP-END	1149
BLADE & EDGE GP	1149
BLADE AS	1152
BLADE AS-SEMI-UNIVERSAL	1154
BLADE AS-UNIVERSAL	1156
BLADE GP-SEMI-UNIVERSAL	1159
BLADE GP-UNIVERSAL	1166
DRIVE GP-WINCH	1174
EDGE GP-BIT & CUTTING	1175
PLATE GP-WEAR	1183
RIPPER GP	1185
TOOTH GP-RIPPER	1191
WINCH AR-TOWING	1194
WINCH GP-TOWING	1194
OPERATOR STATION	1196
ADJUSTER GP-SEAT	1196
AIR CONDITIONER AR	1200
AIR CONDITIONER GP	1202
ARMREST AR	1213
ARMREST GP	1214
CAB AR	1216
CAB AR-COLD WEATHER	1230
CAB GP	1234
COMPRESSOR GP-REFRIGERANT	1238
CONDENSER & MTG GP-REFRIGERANT	1250
CONDENSER GP-REFRIGERANT	1264
CONTROL GP-MONITOR SYS DIMMER	1269
CONTROL GP-WATER	1270
CONVERSION AR	1271
EXTENSION GP-BACKREST	1272
FAN GP-DEFROSTER	1274
FLOORPLATE AR	1276
GUARD GP-VANDALISM	1277
HEATER AR	1278
HEATER GP	1280
HEATER GP-CAB	1286
HOUSING GP-SEAT SUSPENSION	1298
INSTALLATION GP-RADIO	1305
KIT-REBUILD	1306
KIT-WINDOW	1306
LINER GP-CAB	1307
LINES GP-AIR CONDITIONER	1308
LINES GP-HEATER	1324
MIRROR GP-REAR VIEW	1326
MODULE AS-OPERATOR	1328
MODULE GP-QUAD GAUGE	1330
MODULE GP-SPEEDOMETER & TACH	1332
MOUNTING GP-CAB	1334
MOUNTING GP-CB	1336
MOUNTING GP-ROPS	1337
OPERATOR AR-SPECIAL	1338
PAN GP-BACKREST	1344
PAN GP-SEAT	1348
PANEL GP-INSTRUMENT	1350
PLATFORM GP-CAB	1354
RECLINER GP-SEAT	1362
ROPS AS	1363
ROPS GP	1364
SCREEN GP-PROTECTION	1366
SEAT AR	1367
SEAT BELT GP	1368
SEAT GP	1372
SEAT GP-SUSPENSION	1388
SUPPRESSION AR-SOUND	1402
SUSPENSION GP-SEAT	1404
TANK GP-WINDOW WASHER	1420
WASHER GP-WINDOW	1428
WINDOW AS-SLIDING	1435
WINDOW GP-CAB	1436
WIPER GP-WINDOW	1452
WIPER PIVOT GP	1464
SERVICE EQUIPMENT AND SUPPLIES	1465
FILM GP	1465
PLATE & FILM GP	1468
PART NUMBER INDEX	B1

TABLE DES MATIÈRES

Désignation	Page
GÉNÉRALITÉS	A29
OPTIONS DE RÉPARATION	A46
ADDITIFS POUR LIQUIDE DE REFROIDISSEMENT	A51
PIÈCES DE RECHANGE	A64
INDEX	A133
VERSION DE MACHINE	1
VERSION POUR LES RÉGIONS POLAIRES	1
TEMPS FROID (VERSION)	1
COMPOSANTS ÉLECTRONIQUES DE LA MACHINE (VERSION)	1
MACHINE - TEMPS FROID (VERSION)	2
VERSION DE TRANSFORMATION	2
INSONORISATION (VERSION)	3
ÉLIMINATION DES DÉCHETS (VERSION)	4
VERSION DE MOTEUR	6
MOTEUR (VERSION)	6
MOTEUR STANDARD	12
TENDEUR DE COURROIE (ASS)	12
ARBRE A CAMES (ASS)	20
BLOC-CYLINDRES - COUVERCLE (ASS)	21
COUVERCLE DE CARTER DE VOLANT (ASS)	23
COUVERCLE DE CARTER AV (ASS)	24
CACHE-SOUPAPES (ASS)	26
VILEBREQUIN (ASS)	28
BLOC-CYLINDRES (ENS)	34
BLOC-CYLINDRES (ASS)	38
CULASSE (ENS)	41
CULASSE (ASS)	45
AMORTISSEUR DE VIBRATIONS (ASS)	56
ENTRAÎNEMENT DE VENTILATEUR (ASS)	57
VOLANT MOTEUR (ASS)	78
PIGNONNERIE AV (ASS)	80
PIGNON AR (ASS)	82
CARTER DE VOLANT (ASS)	90
CARTER AV (ASS)	92
OEILLETONS DE LEVAGE MOTEUR (ASS)	94
HUILE MOTEUR - CARTER (ASS)	96
PISTON ET BIELLE (ASS)	98
BOUCHON - BLOC-CYLINDRES	100
BOUCHON - CULASSE (ASS)	102
VILEBREQUIN - POULIE (ASS)	103
AXE DE CULBUTEUR (ASS)	105
SUPPORT DE MOTEUR (ASS)	106
TOURILLON DE MOTEUR (ASS)	108
JEU DE COURROIES TRAPEZOIDALES	109
CULBUTERIE (ASS)	110
ETRIER (ASS)	111
CIRCUIT DE GRAISSAGE	113
BOULONNERIE DE MONTAGE DE LA POMPE A HUILE (ASS)	113
BOUCHON DE REMPLISSAGE D'HUILE MOTEUR (ASS)	114
DISPOSITIF D'EVACUATION DES VAPEURS DE CARTER	116
JAUGE D'HUILE MOTEUR (BAIONNETTE) (ASS)	118
CANALISATIONS D'HUILE MOTEUR (ASS)	120
CANALISATIONS D'ALIMENTATION D'HUILE (ASS)	124
CANALISATIONS D'HUILE DE TURBOCOMPRESSEUR (ASS)	130
DISPOSITIF DE VIDANGE RAPIDE D'HUILE (ASS)	132
VERSION DE PRÉGRAISSAGE DE MOTEUR	134
POMPE A HUILE MOTEUR (ASS)	140
SOUPAPE ET MONTAGE-ENTRAÎNEMENT DE VENTILATEUR (ASS)	142
CIRCUIT DE REFROIDISSEMENT	143
ADDITIF POUR LIQUIDE DE REFROIDISSEMENT (ASS)	143
REFROIDISSEUR D'HUILE MOTEUR (ASS)	145
FAISCEAU DU REFROIDISSEUR D'HUILE (ASS)	146
VERSION DE VENTILATEUR	147
VENTILATEUR VARIABLE (VERSION)	148
VENTILATEUR SOUFFLANT (ASS)	150
VENTILATEUR VARIABLE (ASS)	152
CANALISATIONS D'EAU (ASS)	156
POMPE A EAU (ASS)	169
RADIATEUR (ASS)	178
RÉSERVOIR DU LIQUIDE DE REFROIDISSEMENT (ASS)	183
RÉSERVOIR D'EAU (ASS)	184
CIRCUIT D'ADMISSION D'AIR ET D'ECHAPPEMENT	192
ADMISSION REFROIDIE PAR EAU (ASS)	192
FILTRE A AIR (ASS)	194

TABLE DES MATIÈRES

Désignation	Page
ÉJECTEUR AUTOMATIQUE DE POUSSIÈRE (ASS)	197
KIT DE MONTAGE	198
CANALISATIONS D'AIR (ASS)	200
COLLECTEUR D'ÉCHAPPEMENT (ASS)	204
SILENCIEUX (ASS)	206
PREFILTRE (VERSION)	207
PREFILTRE (ASS)	209
ÉCRAN DE COLLECTEUR (ASS)	210
TURBOCOMPRESSEUR (ASS)	212
CIRCUIT DE CARBURANT	216
ADAPTATEUR DE REMPLIS. RAPIDE DE CARBURANT (ASS)	216
COMMANDE DE DECELERATEUR (ASS)	228
ENTRAINEMENT D'INJECTEURS-POMPES HYDRAULIQUES	234
FILTRE ET CANALISATIONS DE CARBURANT (ASS)	246
FILTRE A CARBURANT (ASS)	248
FILTRE DE SÉPARATEUR D'EAU ET DE CARBURANT (ASS)	252
INJECTEUR DE CARBURANT (ASS)	255
KIT DE JOINTS	260
CANALISATIONS DE CARBURANT (ASS)	262
CANALISATIONS DU FILTRE A CARBURANT (ASS)	264
CANALISATIONS - INJECTEURS-POMPES HYDRAULIQUES	268
POMPE D'INJECTEURS-POMPES HYDRAU. ET MONTAGE	270
POMPE D'INJECTION DE CARBURANT (ASS)	286
POMPE D'AMORÇAGE DE CARBURANT (ASS)	291
POMPE D'AMORÇAGE DE CARBURANT ET FILTRE PRINCIPAL	292
INJECTEURS-POMPES HYDRAULIQUES (ENS)	294
RÉSERVOIR DE CARBURANT (ASS)	308
DISTRIBUTEUR DE PRESSION (ASS)	314
CIRCUIT DE DÉMARRAGE ET ÉLECTRIQUE	315
AVERTISSEUR (ASS)	315
ALTERNATEUR DE CHARGE (VERSION)	316
ALTERNATEUR DE CHARGE (ASS)	318
BATTERIE ET CÂBLAGE	328
COMMANDE ELECTRONIQUE ET MONTAGE (ASS)	376
COMMANDE ET MONTAGE - MOTEUR	379
COMMANDE ELECTRONIQUE DE BOITE (ASS)	381
COMMANDE ÉLECTRIQUE DE RÉGLAGE DU MOTEUR (ASS)	384
COMMANDE ELECTRONIQUE DE MOTEUR (ASS)	387
COMMANDE DE TRANSMISSION (ASS)	391
COMMANDE NON PROGRAMMEE (ASS)	392
TRANSFORMATION ELECTRIQUE (ASS)	395
ÉLECTRONIQUE DE TRANSMISSION (ASS)	396
BOULONNERIE - ROBINET DE BATTERIE (VERSION)	397
RÉCHAUFFEUR DU LIQUIDE DE REFROIDISSEMENT (ASS)	398
RECHAUFFEUR DE CARBURANT (ASS)	406
EAU DES CHEMISES - RECHAUFFEUR (ASS)	410
BLOC DE BRANCHEMENT (ASS)	413
PLAFONNIER (ASS)	414
LAMPE - PHARE (ASS)	415
ÉCLAIRAGE (VERSION)	420
VERSION D'ÉCLAIRAGE ARRIÈRE	424
ÉCLAIRAGE (ASS)	426
ÉCLAIRAGE - AUXILIAIRE (ASS)	427
ÉCLAIRAGE - PROJECTEURS (ASS)	429
ECLAIRAGE AV (ASS)	434
ECLAIRAGE AR (ASS)	439
ECLAIRAGE DE RIPPER (ASS)	442
CAPTEUR MAGNÉTIQUE (ASS)	443
CAPTEUR - SUPPRESSION DE COM. DE RALENTIS. AUTO.	444
CAPTEUR DE NIVEAU DE CARBURANT (ASS)	445
SONDE - CIRCUIT DE CARBURANT	446
CAPTEUR DE PRESSION (ASS)	453
CAPTEUR DE VITESSE (ASS)	463
CAPTEUR DE TEMPERATURE (ASS)	468
ENTRETIEN DE LA TRANSMISSION (ASS)	471
SOLÉNOÏDE DE DÉMARREUR (ENS)	472
AUXILIAIRE DE DÉMARRAGE À L'ÉTHER	474
DÉMARRAGE PAR TEMPS FROID (VERSION)	476
DÉMARREUR ÉLECTRIQUE (ASS)	484
INTERRUPTEUR - DÉRIVATION (ASS)	497
ROBINET DE BATTERIE (ASS)	499
CONTACTEUR DE DEBIT (ASS)	500

TABLE DES MATIÈRES

Désignation	Page
CONTACTEUR-POIGNÉE (ASS)	502
INTERRUPTEUR DE DÉMARRAGE (ASS)	503
INTERRUPTEUR - MINUTERIE (ASS)	504
CABLAGE DE CONSOLE (ASS)	506
CABLAGE DE MOTEUR (ASS)	520
CABLAGE - PLATE-FORME (ASS)	522
CABLAGE D'INJECTEUR	530
TRANSMISSION	531
ARBRE DE TRANSMISSION (ASS)	531
TRAINS PLANÉTAIRES - CARTER ET PIÈCES	536
COMMANDE DE BOÎTE ET MONTAGE (ASS)	538
COMMANDE HYDRAULIQUE DE BOÎTE (ASS)	540
REFROIDISSEUR D'HUILE DE BOÎTE (ASS)	546
ACCOUPLEMENT DE POMPE (ASS)	547
VIDANGE-ÉCOLOGIE (ASS)	548
FILTRE A HUILE (ASS)	550
RÉDUCTEURS (ASS)	558
COURONNE ET ENGRENAGES DE TRANSFERT (ASS)	598
BLINDAGE D'ARBRE DE TRANSMISSION (ASS)	600
CANALISATIONS D'HUILE DE TRANSMISSION (ASS)	602
COLLECTEUR ET SOUPAPE (ASS)	626
REDUCTEUR MARIN - MONTAGE (ASS)	628
BOÎTE PLANÉTAIRE (ASS)	630
POMPE A ENGRENAGES (ASS)	634
SEGMENT DE BARBOTIN (ASS)	639
ARBRE D'ENTRAINEMENT PRINCIPAL	641
CONVERTISSEUR DE COUPLE (ASS)	642
BOÎTE DE VITESSES (VERSION)	648
JOINT UNIVERSEL (ASS)	649
SOUPAPE PILOTE ET MONTAGE (ASS)	650
DISTRIBUTEUR (ASS)	652
SOUPAPE DE MODULATION (ASS)	660
DISTRIBUTEUR DE PRESSION (ASS)	662
SOUPAPE DE PRIORITE (ASS)	664
CLAPET DE DECHARGE (ASS)	666
SOUPAPE SÉLECTRICE (ASS)	670
SOUPAPE - SOLÉNOÏDE (ASS)	671
DISTRIBUTEUR DE BOITE (ASS)	673
CHÂSSIS ET BENNE	678
CHÂSSIS ET CARTER (ASS)	678
CONTREPOIDS ET BARRE - ARRIÈRE (VERSION)	684
CONTREPOIDS (ASS)	686
COUVERCLE DE TOURILLON (ASS)	690
BARRE D'ATTELAGE (ASS)	692
CARENAGE DE MOTEUR (ASS)	694
CARENAGE - GARDE-BOUE (ASS)	700
GARDE-BOUE (VERSION)	706
GARDE-BOUE (ASS)	708
DEFLECTEUR PARE-SABLE (ASS)	713
PROTECTEUR DE RÉDUCTEURS (VERSION)	714
PROTECTION À CHARNIÈRES (VERSION)	716
PROTECTION DE ROUE LIBRE (VERSION)	718
BLINDAGE INFÉRIEUR (ASS)	720
PROTECTION D'ARBRE PIVOT (ASS)	724
PROTÈGE-RADIATEUR (ASS)	726
BLINDAGE AR	730
PARE-PIERRES (ASS)	732
PROTECTION DE JOINT (ASS)	734
CAPOT ET PROTECTION (ASS)	736
VERROU (ASS)	741
TRAIN DE ROULEMENT	742
BARRE DÉFLECTRICE (VERSION)	742
BALANCIER DE SUSPENSION (ASS)	746
BARRE DÉFLECTRICE (ASS)	762
CHAPEAU DE ROUE AV (CHAINE) (ASS)	764
CHAPEAU DE GALET INFERIEUR (ASS)	766
CARTER TÉLESCOPIQUE DE MÉCANISME AMORTISSEUR (ENS)	767
CARTER TELESCOPIQUE DE MECANISME AMORTISSEUR	768
ROUE AV - CHAÎNES (VERSION)	782
ROUE AV - CHAINES (ASS)	783
MAILLON DE CHAINE (ENS)	792
GRAISSAGE DE BALANCIER DE SUSPENSION (ASS)	796
GRAISSAGE DE LA TRAVERSE-PIVOT	798
GALET SUPERIEUR (VERSION)	802
GALET A BOUDIN DOUBLE (ASS)	805
GALET A BOUDIN SIMPLE (ASS)	810
SUSPENSION A BOGIES (ASS)	815
SUSPENSION (ASS)	816
SUSPENSION A BOGIES (ASS)	817
MECANISME AMORTISSEUR ET REGLAGE DE CHAINES (ASS)	822
CHAINES (ASS)	836
TRAIN DE ROULEMENT	838

TABLE DES MATIÈRES

Désignation	Page
CIRCUIT DE DIRECTION ET DE FREIN	844
RÉGLAGE DE COMMANDE DE DIRECT. ET DE BOÎTE	844
EMBRAYAGE ET FREIN DE DIRECTION (ASS)	848
FREIN - COMMANDE (ASS)	852
COMMANDE DE FREIN DE STATIONNEMENT (ASS)	858
COMMANDE DE DIRECTION ET BOITE DE VITESSES	860
DISPOSITIF D'ARRÊT	868
ENGRENAGE DE DIRECTION (ASS)	870
COLLECTEUR ET SOUPAPE (ASS)	874
SUPPORT - COMMANDE (ASS)	876
SOUPAPE DE DIRECTION ET MONTAGE (ENS)	877
DISTRIBUTEUR (ASS)	878
SOUPAPE - SOLÉNOÏDE (ASS)	880
CIRCUIT HYDRAULIQUE	882
POMPE À AILETTES - CARTOUCHE	882
COMMANDE DE DOUBLE DEVERS (VERSION)	884
COMMANDE HYDRAULIQUE (VERSION)	886
REFROIDISSEUR D'HUILE HYDRAULIQUE (ASS)	893
COUVERCLE DE RÉSERVOIR HYDRAULIQUE	896
VÉRIN ET CANALISATIONS - DOUBLE INCLINAISON (ASS)	897
VÉRIN À DOUBLE INCLINAISON (VERSION)	897
VÉRIN DE LEVAGE DE LAME DE BULLDOZER (ASS)	898
VÉRIN D'INCLINAISON DE BULLDOZER (ASS)	902
VÉRIN D'INCLINAISON DOUBLE (ASS)	908
VERIN DE LEVAGE DE RIPPER (ASS)	912
VERIN D'EXTRACTEUR DE BROCHE DE RIPPER (ASS)	924
VERIN D'INCLINAISON DU RIPPER (ASS)	926
CANALISATIONS (ASSEMBLAGE POUR L'ARCTIQUE)	932
CANALISATIONS DE VÉRIN DE LEVAGE (ASS)	934
CANALISATIONS D'EXTRACTEUR DE BROCHE (ASS)	937
CANALISATIONS DE POMPE (ASS)	942
CANALISATIONS DU RIPPER (ASS)	964
CANALISATIONS D'INCLINAISON (ASS)	971
CANALISATIONS DU VÉRIN D'INCLINAISON (ASS)	972
CANALISATIONS DE TREUIL (ASS)	986
CANALISATIONS ET POMPE (VERSION)	990
POMPE A ENGRENAGES (ASS)	991
POMPE À PALETTES (ASS)	994
RÉSERVOIR HYDRAULIQUE ET FILTRE (ASS)	998
DISTRIBUTEUR ET VÉRIN (ASS)	1000
DISTRIBUTEUR ET MONTAGE (ASS)	1016
DISTRIBUTEURS (ASS)	1018
DISTRIBUTEUR TRIPLE ÉLÉMENT (ASS)	1020
SOUPAPE DE DÉRIVATION (ASS)	1022
CLAPET DE RETENUE (ENS)	1023
DISTRIBUTEUR (ASS)	1024
SOUPAPE PILOTE (ASS)	1038
DISTRIBUTEUR DE PRESSION (ASS)	1040
SOUPAPE D'ABAISSEMENT RAPIDE (ASS)	1041
CLAPET DE DECHARGE (ASS)	1043
SOUPAPE SELECTRICE ET REGULATRICE DE PRESSION	1044
VANNE PILOTE (ASS)	1046
SOUPAPE - SOLÉNOÏDE (ASS)	1047
DISTRIBUTEUR D'INCLINAISON (ASS)	1058
ÉQUIPEMENTS	1060
TAMPON DE POUSSÉE (ASS)	1060
TIRANT DE BULLDOZER (ASS)	1064
VERSION DE BULLDOZER	1065
FILTRE DE DÉRIVATION (ASS)	1069
CARTER - TREUIL (ASS)	1070
EMBRAYAGE ET ENGRENAGE (ASS)	1074
COMMANDE DE TREUIL DE REMORQUAGE (ASS)	1082
COMMANDE DE TREUIL (ASS)	1086
COUVERCLES D'EXPEDITION (ASS)	1088
GUIDE-CABLE DE TREUIL (ASS)	1089
BATI DE RIPPER (ASS)	1090
ENGRENAGE D'ÉQUIPEMENT (ASS)	1100
GUIDE DE GALET (ASS)	1101
MONTAGE DE TREUIL (VERSION)	1102
KIT DE BOULONNERIE, JOINTS ET CALES D'ÉPAISSEUR	1102
STABILISATEUR - BRAS DE POUSSEE (ASS)	1106
TRINGLERIE D'ÉQUIPEMENT (ASS)	1108
MONTAGE DE VÉRIN (ASS)	1114
MONTAGE DE POMPE (ASS)	1115
MONTAGE DE RIPPER (ASS)	1116
MONTAGE DE TREUIL (ASS)	1124

TABLE DES MATIÈRES

Désignation	Page
EXTRACTEUR DE BROCHE (VERSION)	1125
EXTRACTEUR DE BROCHE (ASS)	1126
BRAS DE POUSSÉE (ASS)	1130
BRAS DE POUSSEE - GAUCHE (ASS)	1131
BRAS DE POUSSEE - DROITE (ASS)	1132
RIPPER (VERSION)	1133
ÉCRAN MAGNÉTIQUE (ASS)	1136
TOURILLON DE BULLDOZER (VERSION)	1138
TOURILLON DE BULLDOZER (ASS)	1142
DISTRIBUTEUR DE PRESSION (ASS)	1144
SOUPAPE SÉLECTRICE (ASS)	1146
DISTRIBUTEUR DE TREUIL (ASS)	1148
OUTILS DE TRAVAIL	1149
EMBOUT D'EXTRÉMITÉ (ASS)	1149
LAME DE COUPE (ASS)	1149
BALAI D'ESSUIE-GLACE (ENS)	1152
LAME SEMI-UNIVERSELLE (ENS)	1154
LAME UNIVERSELLE (ENS)	1156
LAME SEMI-UNIVERSELLE (ASS)	1159
LAME UNIVERSELLE (ASS)	1166
ENTRAÎNEMENT DE TREUIL (ASS)	1174
EMBOUT ET LAME DE COUPE (ASS)	1175
PLAQUE D'USURE (ASS)	1183
RIPPER (ASS)	1185
DENT DE RIPPER (ASS)	1191
TREUIL DE REMORQUAGE (ENS)	1194
TREUIL DE REMORQUAGE (ASS)	1194
POSTE DE CONDUITE	1196
REGLAGE DE SIEGE (ASS)	1196
CLIMATISEUR (VERSION)	1200
CLIMATISEUR (ASS)	1202
ACCOUDOIR (VERSION)	1213
ACCOUDOIR (ASS)	1214
CABINE (VERSION)	1216
CABINE (VERSION POUR TEMPS FROID)	1230
CABINE (ASS)	1234
COMPRESSEUR DE REFRIGERANT (ASS)	1238
CONDENSATEUR ET MONTAGE (RÉFRIGÉRANT)	1250
CONDENSEUR DE RÉFRIGÉRANT	1264
COMMANDE D'INVERSION DE LA CENTRALE DE SURVEILLANCE (ASS)	1269
COMMANDE DE PULVERISATION (ASS)	1270
VERSION DE TRANSFORMATION	1271
RALLONGE DU DOSSIER DE SIEGE	1272
VENTILATEUR DÉGIVREUR (ASS)	1274
TOLE DE PLANCHER (VERSION)	1276
PROTECTION ANTIVANDALISME (ASS)	1277
CHAUFFAGE (VERSION)	1278
CHAUFFAGE (ASS)	1280
CHAUFFAGE DE CABINE (ASS)	1286
SUSPENSION DE SIEGE - CARTER (ASS)	1298
MONTAGE DE RADIO (ASS)	1305
KIT DE RÉNOVATION	1306
KIT-FENETRE	1306
CABINE - REVÊTEMENT (ASS)	1307
CANALISATIONS DE CLIMATISEUR (ASS)	1308
CANALISATIONS DE CHAUFFAGE (ASS)	1324
RÉTROVISEUR (ASS)	1326
MODULE - CONDUCTEUR (ENS)	1328
MODULE - QUATRE INSTRUMENTS (ASS)	1330
MODULE D'INDICATEUR DE VITESSE ET COMPTE-TOURS (ASS)	1332
MONTAGE DE CABINE (ASS)	1334
GROUPE DE MONTAGE	1336
MONTAGE DU TOIT ROPS (ASS)	1337
CONDUCTEUR - SPÉCIAL (VERSION)	1338
COUVERCLE INFÉRIEUR-DOSSIER (ASS)	1344
SIEGE - COUVERCLE INFERIEUR (ASS)	1348
TABLEAU DE BORD (ASS)	1350
PLATE-FORME - CABINE (ASS)	1354
SIÈGE INCLINABLE (ASS)	1362
TOIT ROPS (ENS)	1363
TOIT ROPS (ASS)	1364
GRILLE DE PROTECTION (ASS)	1366
SIEGE (VERSION)	1367
CEINTURE DE SECURITE (ASS)	1368
SIÈGE (ASS)	1372
SIÈGE AVEC SUSPENSION (ASS)	1388
INSONORISATION (VERSION)	1402
SIÈGE AVEC SUSPENSION (ASS)	1404
RÉSERVOIR - LAVE-GLACE (ASS)	1420
LAVE-GLACE - VITRE (ASS)	1428
VITRE COULISSANTE (ENS)	1435
VITRE DE CABINE (ASS)	1436
ESSUIE-GLACE (ASS)	1452
PIVOT D'ESSUIE-GLACE (ASS)	1464
MATÉRIEL ET FOURNITURES D'ENTRETIEN	1465
PLAQUE SIGNALÉTIQUE (ASS)	1465
PLAQUES SIGNALETIQUES ET AUTOCOLLANTS (ASS)	1468
INDEX DE NUMÉROS DE PIÈCES	B1

CONTENIDO

Nombre	Página
INFORMACIÓN GENERAL	A33
ALTERNATIVAS DE REPARACIÓN	A47
ADITIVOS DE REFRIGERANTE SUPLEMENTARIOS	A52
PIEZAS DE MANTENIMIENTO	A76
INDICE	A155
CONFIGURACIÓN DE MÁQUINA	1
CONFIGURACIÓN PARA REGIONES ÁRTICAS	1
CONFIGURACIÓN PARA CLIMA FRÍO	1
CONFIGURACIÓN ELECTRÓNICA DE LA MÁQUINA	1
CONFIGURACIÓN DE MÁQUINA PARA CLIMAS FRÍOS	2
CONFIGURACIÓN DE MODIFICACIÓN	2
INSONORIZADOR (CONFIG)	3
CONFIGURACIÓN DE ELIMINACIÓN DE BASURAS	4
CONFIGURACIÓN DE MOTOR	6
CONFIGURACIÓN DE MOTORES	6
MOTOR BÁSICO	12
AJUSTADOR DE CORREA (GR)	12
ÁRBOL DE LEVAS (GR)	20
TAPA DEL BLOQUE MOTOR (GR)	21
TAPA DE LA CAJA DE VOLANTE (GR)	23
TAPA DE LA CAJA DELANTERA (GR)	24
TAPA DEL MECANISMO DE VÁLVULAS (GR)	26
CIGÜEÑAL (GR)	28
BLOQUE MOTOR (CONJ)	34
BLOQUE MOTOR (GR)	38
CULATA DE CILINDROS (CONJ)	41
CULATA DE CILINDROS (GR)	45
AMORTIGUADOR DE VIBRACIONES (GR)	56
IMPULSOR DE VENTILADOR (GR)	57
VOLANTE (GR)	78
ENGRANAJE DELANTERO (GR)	80
ENGRANAJE TRASERO (GR)	82
VOLANTE - CAJA DE (GR)	90
CAJA DELANTERA (GR)	92
CÁNCAMOS DE LEVANTAMIENTO DEL MOTOR (GR)	94
CÁRTER - COLECTOR DEL (GR)	96
PISTÓN Y BIELA (GR)	98
TAPÓN DEL BLOQUE MOTOR (GR)	100
TAPÓN DE CULATA (GR)	102
CIGÜEÑAL - POLEA DE (GR)	103
BALANCÍN (GR)	105
MOTOR - SOPORTE DEL (GR)	106
MUÑÓN DEL MOTOR (GR)	108
JUEGO DE CORREAS TRAPEZOIDALES	109
MECANISMO DE VÁLVULAS (GR)	110
YUGO (GR)	111
SISTEMA DE LUBRICACIÓN	113
TORNILLERÍA DE MONT. DE LA BOMBA DE ACEITE (GR)	113
TUBO DE LLENADO DE ACEITE (GR)	114
ESCAPE DE GASES (GR)	116
INDICADOR DEL NIVEL DE ACEITE (VARILLA) (GR)	118
TUBERÍAS DE ACEITE DEL MOTOR (GR)	120
TUBERIAS DE ACEITE (GR)	124
TURBOCOMPRESOR - TUBERÍAS DE ACEITE DEL (GR)	130
CAMBIO RÁPIDO DE ACEITE (GR)	132
PRELUBRICACION DEL MOTOR (CONFIG)	134
BOMBA DE ACEITE DEL MOTOR (GR)	140
VALVULA Y MONTAJE DE MANDO DE VENTILADOR (GR))	142
SISTEMA DE ENFRIAMIENTO	143
ACONDICIONADOR DE REFRIGERANTE (GR)	143
ENFRIADOR DE ACEITE DEL MOTOR (GR)	145
NÚCLEO DEL ENFRIADOR DE ACEITE (GR)	146
VENTILADOR, CONFIGURACIÓN	147
VENTILADOR VARIABLE (CONFIG)	148
SOPLADOR - VENTILADOR (GR)	150
PASO VARIABLE DEL VENTILADOR (GR)	152
TUBERÍAS DEL AGUA (GR)	156
BOMBA DE AGUA (GR)	169
RADIADOR (GR)	178
TANQUE DE REFRIGERANTE (GR)	183
TANQUE DEL AGUA (GR)	184
SISTEMA DE ADMISIÓN Y ESCAPE DE AIRE	192
POSENFRIADOR DE AGUA (GR)	192
FILTRO DE AIRE (GR)	194
EXPULSOR DE POLVO (GR)	197
JUEGO DE INSTALACIÓN	198
AIRE - TUBERÍAS DE (GR)	200
MÚLTIPLE DE ESCAPE (GR)	204
SILENCIADOR (GR)	206

CONTENIDO

Nombre	Página
ANTEFILTRO (CONFIG)	207
ANTEFILTRO (GR)	209
MULTIPLE - PROTECTOR DEL	210
TURBOCOMPRESOR (GR)	212
SISTEMA DE COMBUSTIBLE	216
ADAPTADOR DE LLENADO RÁPIDO DE COMBUSTIBLE (GR)	216
CONTROL DEL DECELERADOR (GR)	228
MANDO DE BOMBA HIDRÁULICA INYECTORA (GR)	234
FILTRO Y TUBERÍAS DE COMBUSTIBLE (GR)	246
FILTRO DE COMBUSTIBLE (GR)	248
FILTRO DE COMBUSTIBLE Y SEPARADOR DE AGUA (GR)	252
INYECTOR DE COMBUSTIBLE (GR)	255
JUEGO DE SELLOS	260
TUBERÍAS DE COMBUSTIBLE (GR)	262
TUBERÍAS DEL FILTRO DE COMBUSTIBLE	264
TUBERÍAS DE BOMBA HIDRÁULICA DE INYECCIÓN (GR)	268
BOMBA HIDRÁULICA DEL INYECTOR UNITARIO Y MONTAJE	270
BOMBA DE INYECCIÓN DE COMBUSTIBLE (GR)	286
BOMBA DE CEBADO DE COMBUSTIBLE (GR)	291
BOMBA DE CEBADO Y FILTRO PRIMARIO DE COMBUSTIBLE (GR)	292
BOMBA HIDRÁULICA DEL INYECTOR UNITARIO (GR)	294
COMBUSTIBLE - TANQUE DE (GR)	308
PRESIÓN - VÁLVULA DE CONTROL DE (GR)	314
SISTEMA ELÉCTRICO Y DE ARRANQUE	315
ALARMA (GR)	315
ALTERNADOR DE CARGA (CONFIG)	316
CARGA - ALTERNADOR DE (GR)	318
BATERÍA Y CABLES (GR)	328
CONTROL ELECTRÓNICO Y MONTAJE (GR)	376
CONTROL ELECTRÓNICO DEL MOTOR Y MONTAJE	379
CONTROL ELECTRÓNICO (GR)	381
CONTROL ELECTRÓNICO DE CLASIFICACIÓN DE MOTOR (GR)	384
CONTROL ELECTRÓNICO DEL MOTOR (GR)	387
CONTROL DE TREN DE FUERZA (GR)	391
CONTROL NO PROGRAMADO (GR)	392
CONVERTIDOR ELÉCTRICO (GR)	395
TREN DE FUERZA-GRUPO ELECTRÓNICO	396
TORNILLERÍA-INTERRUPTOR GENERAL (CONFIG)	397
CALENTADOR DEL REFRIGERANTE (GR)	398
CALENTADOR DEL COMBUSTIBLE (GR)	406
AGUA DE LAS CAMISAS - CALENTADOR DEL (GR)	410
BLOQUE DE EMPALME (GR)	413
LÁMPARA DEL TECHO (GR)	414
REFLECTOR (GR)	415
LUCES (CONFIG)	420
ILUMINACION TRASERA (CONFIG)	424
GRUPO DE LUCES	426
LUCES AUXILIARES (GR)	427
LUCES DE REFLECTOR (GR)	429
LUCES DELANTERAS (GR)	434
LUCES TRASERAS (GR)	439
LUCES DEL DESGARRADOR (GR)	442
DETECTOR MAGNÉTICO (GR)	443
SENSOR DEL SUPRESOR DEL CONTROL AUTOMÁTICO DEL RETARDADOR (GR)	444
SENSOR DE NIVEL DE COMBUSTIBLE (GR)	445
DETECTOR DE POSICIÓN (SISTEMA DE COMBUST.) (GR)	446
SENSOR DE PRESIÓN (GR)	453
SENSOR DE VELOCIDAD (GR)	463
SENSOR DE TEMPERATURA (GR)	468
SERVICIO DE TREN DE FUERZA (GR)	471
SOLENOIDE DEL MOTOR DE ARRANQUE (CONJ)	472
AUXILIAR DE ARRANQUE CON ÉTER (GR)	474
ARRANQUE EN TIEMPO FRIO (CONFIG)	476
MOTOR DE ARRANQUE ELÉCTRICO (GR)	484
INTERRUPTOR DE DERIVACIÓN	497
DISYUNTOR (GR)	499
INTERRUPTOR DE FLUJO (GR)	500
EMPUÑADURA DEL INTERRUPTOR (GR)	502
ARRANQUE - INTERRUPTOR DE (GR)	503
INTERRUPTOR DE CRONOMETRO (GR)	504
CABLES DE LA CONSOLA (GR)	506
CABLES DEL MOTOR (GR)	520
CABLES DE LA PLATAFORMA (GR)	522
CABLES DE INYECTOR (GR)	530

CONTENIDO

Nombre	Página
TREN DE FUERZA	531
EJE DEL TREN DE FUERZA (GR)	531
CAJA Y PIEZAS DE LOS PLANETARIOS	536
CONTROL DE LA TRANSMISIÓN Y MONTAJE (GR)	538
CONTROL HIDRÁULICO DE LA TRANSMISIÓN (GR)	540
ENFRIADOR DE ACEITE DE LA TRANSMISIÓN (GR)	546
ACOPLAMIENTO DE BOMBA (GR)	547
DRENAJE DE SEGURIDAD ECOLÓGICA (GR)	548
FILTRO DE ACEITE (GR)	550
MANDO FINAL (GR)	558
ENGRANAJE DE TRANSFERENCIA Y CORONA (GR)	598
PROTECTOR DEL EJE IMPULSOR (GR)	600
TUBERÍAS DE ACEITE DEL TREN DE FUERZA (GR)	602
MÚLTIPLE Y VÁLVULA (GR)	626
MONTAJE DE LA TRANSMISIÓN (GR)	628
TRANSMISIÓN PLANETARIA (GR)	630
BOMBA DE ENGRANAJES (GR)	634
SEGMENTO DE RUEDA MOTRIZ (GR)	639
EJE DE MANDO PRINCIPAL (GR)	641
CONVERTIDOR DE PAR (GR)	642
TRANSMISION (CONFIG)	648
JUNTA UNIVERSAL (GR)	649
VALVULA PILOTO Y MONTAJE (GR)	650
VÁLVULA DE CONTROL (GR)	652
VÁLVULA DE MODULACIÓN (GR)	660
PRESIÓN - VÁLVULA DE CONTROL DE (GR)	662
PRIORIDAD - VÁLVULA DE (GR)	664
VÁLVULA DE ALIVIO (GR)	666
VÁLVULA SELECTORA (GR)	670
VÁLVULA DE SOLENOIDE (GR)	671
VÁLVULA DE CONTROL DE LA TRANSMISIÓN (GR)	673
BASTIDOR Y CAJA	678
CAJA Y BASTIDOR (GR)	678
CONTRAPESO TRASERO Y BARRA (CONFIG)	684
CONTRAPESO (GR)	686
TAPA DEL MUÑÓN (GR)	690
BARRA DE TIRO (GR)	692
COMPARTIMIENTO DEL MOTOR (GR)	694
CONTENIDO DEL GRUPO DE GUARDABARROS	700
GUARDABARROS (CONFIG)	706
GUARDABARROS (GR)	708
PROTECTOR CONTRA ARENA (GR)	713
PROTECTOR DE MANDO FINAL (GR)	714
PROTECTOR ABISAGRADO (CONJ)	716
PROTECTOR DE LA RUEDA GUÍA (CONFIG)	718
PROTECTOR INFERIOR (GR)	720
PROTECTOR DEL EJE PIVOTE (GR)	724
PROTECTOR DEL RADIADOR (GR)	726
PROTECTOR POSTERIOR (GR)	730
PROTECTOR CONTRA ROCAS (GR)	732
PROTECTOR DE SELLO (GR)	734
CAPO Y PROTECTOR (GR)	736
RETÉN (GR)	741
TREN DE RODAJE	742
BARRA LIMPIADORA(CONFIG)	742
BARRA COMPENSADORA (GR)	746
BARRA LIMPIADORA (GR)	762
TAPA DE RUEDA GUÍA (GR)	764
TAPA DE RODILLO INFERIOR	766
BASTIDOR TELESCÓPICO TENSOR (CONJ)	767
BASTIDOR TELESCÓPICO DEL RESORTE TENSOR (GR)	768
CADENA - RUEDA GUÍA (CONFIG)	782
RUEDA GUÍA DE CADENA (GR)	783
ESLABÓN DE CADENA (CONJ)	792
GRUPO DE LUBRICACIÓN DE BARRA ESTABILIZADORA	796
LUBRICACIÓN DE EJE PIVOTE (GR)	798
RODILLO SUPERIOR DE CADENAS (CONFIG)	802
RODILLOS DE PESTAÑA DOBLE (GR)	805
RODILLOS DE PESTAÑA SIMPLE (GR)	810
SOPORTE BASCULANTE (GR)	815
SUSPENSIÓN (GR)	816
SOPORTE BASCULANTE (GR)	817
RESORTE TENSOR Y AJUSTADOR DE LA CADENA (GR)	822
CADENAS (GR)	836
TREN DE RODAJE (CONFIG)	838
SISTEMA DE FRENOS Y DIRECCIÓN	844
AJUSTADOR DEL CONTROL DE DIRECCIÓN Y TRANSMISIÓN (GR)	844
FRENO Y EMBRAGUE DE DIRECCIÓN (GR)	848
CONTROL DEL FRENO (GR)	852
CONTROL DEL FRENO DE ESTACIONAMIENTO	858
CONTROL DE DIRECCIÓN Y TRANSMISIÓN (GR)	860
TOPE (GR)	868
ENGRANAJE DE DIRECCIÓN (GR)	870
MÚLTIPLE Y VÁLVULA (GR)	874

CONTENIDO

Nombre	Página
SOPORTE DE CONTROL (GR)	876
VÁLVULA DE DIRECCIÓN Y MONTAJE (GR)	877
VÁLVULA DE CONTROL (GR)	878
VÁLVULA DE SOLENOIDE (GR)	880
SISTEMA HIDRÁULICO	882
BOMBA DE PALETAS-CARTUCHO (GR)	882
CONTROL DE INCLINACIÓN DUAL (CONFIG)	884
CONTROL HIDRÁULICO (CONFIG)	886
ENFRIADOR DEL ACEITE HIDRAULICO (GR)	893
TAPA DEL TAPÓN DEL TANQUE HIDRÁULICO (GR)	896
CILINDRO DE DOBLE INCLINACION Y TUBERIAS (GR)	897
CILINDRO DE DOBLE INCLINACION (CONFIG)	897
CILINDRO DE LEVANTAMIENTO DE LA HOJA TOPADORA (GR)	898
CILINDRO DE INCLINACIÓN DE LA HOJA TOPADORA (GR)	902
CILINDRO DE DOBLE INCLINACIÓN (GR)	908
CILINDRO DE LEVANTAMIENTO DEL DESGARRADOR (GR)	912
CILINDRO DEL EXTRACTOR DE PASADOR DEL DESGARRADOR (GR)	924
CILINDRO DE INCLINACIÓN DEL DESGARRADOR (GR)	926
LÍNEAS ÁRTICAS (GR)	932
CILINDRO DE LEVANTAMIENTO - TUBERÍAS DEL (GR)	934
TUBERÍAS DE CILINDRO DE EXTRACTOR DE PASADORES	937
BOMBA - TUBERÍAS DE (GR)	942
TUBERÍAS DEL DESGARRADOR (GR)	964
TUBERÍAS DE INCLINACIÓN	971
TUBERÍAS DEL CILINDRO DE INCLINACIÓN (GR)	972
TUBERÍAS DEL MALACATE (GR)	986
TUBERÍAS DE BOMBA (CONFIG)	990
BOMBA DE ENGRANAJES (GR)	991
BOMBA DE PALETAS (GR)	994
TANQUE Y FILTRO HIDRÁULICOS (GR)	998
VÁLVULA Y CILINDRO (GR)	1000
VÁLVULA DE CONTROL Y MONTAJE (GR)	1016
BANCADA DE VÁLVULAS HIDRÁULICAS (GR)	1018
GRUPO DE 3 VÁLVULAS HIDRÁULICAS	1020
DERIVACIÓN - VÁLVULA DE (GR)	1022
VÁLVULA DE RETENCIÓN (GR)	1023
VÁLVULA DE CONTROL (GR)	1024
VÁLVULA PILOTO (GR)	1038
PRESIÓN - VÁLVULA DE CONTROL DE (GR)	1040
VÁLVULA DE CAÍDA RÁPIDA (GR)	1041
VÁLVULA DE ALIVIO (GR)	1043
VÁLVULA SELECTORA Y DE CONTROL DE PRESIÓN (GR)	1044
VÁLVULA DE LANZADERA (GR)	1046
VÁLVULA DE SOLENOIDE (GR)	1047
VALVULA DE CONTROL DE INCLINACION (GR)	1058
IMPLEMENTOS	1060
BLOQUE DE EMPUJE (GR)	1060
SOPORTE DE LA HOJA TOPADORA	1064
HOJA TOPADORA (CONFIG)	1065
FILTRO DE DERIVACIÓN (GR)	1069
CAJA DEL CABRESTANTE (GR)	1070
EMBRAGUE Y ENGRANAJE (GR)	1074
CONTROL DE REMOLQUE DEL MALACATE (GR)	1082
CONTROL DEL MALACATE (GR)	1086
TAPAS PROTECTORAS DE EMBARQUE (GR)	1088
GUIACABLE DEL MALACATE (GR)	1089
BASTIDOR DEL DESGARRADOR (GR)	1090
ENGRANAJE ACCESORIO (GR)	1100
GUÍA DE RODILLO (GR)	1101
INSTALACIÓN DEL MALACATE (CONFIG)	1102
JUEGO DE TORNILLERÍA, JUNTAS Y CALCES	1102
ESTABILIZADOR DEL BRAZO DE EMPUJE (GR)	1106
VARILLAJE DE LOS IMPLEMENTOS	1108
MONTAJE DE CILINDRO (GR)	1114
MONTAJE DE LA BOMBA (GR)	1115
MONTAJE DEL DESGARRADOR (GR)	1116
MONTAJE DEL MALACATE (GR)	1124
EXTRACTOR DE PASADOR (CONFIG)	1125
EXTRACTOR DE PASADOR (GR)	1126
BRAZO DE EMPUJE (GR)	1130
BRAZO DE EMPUJE IZQUIERDO (GR)	1131
BRAZO DE EMPUJE DERECHO (GR)	1132
DESGARRADOR (CONFIG)	1133
REJILLA MAGNÉTICA (GR)	1136
MUÑÓN DE LA HOJA TOPADORA (CONFIG)	1138

CONTENIDO

Nombre	Página
MUÑÓN DE LA HOJA TOPADORA (GR)	1142
PRESIÓN - VÁLVULA DE CONTROL DE (GR)	1144
VÁLVULA SELECTORA (GR)	1146
VÁLVULA DE CONTROL DEL MALACATE (GR)	1148
HERRAMIENTAS	1149
CANTONERA DE EXTREMO (GR)	1149
HOJA Y CUCHILLA (GR)	1149
HOJA DE LIMPIAPARABRISAS (CONJ)	1152
HOJA SEMIUNIVERSAL (CONJ)	1154
HOJA UNIVERSAL (CONJ)	1156
HOJA SEMIUNIVERSAL (GR)	1159
HOJA UNIVERSAL (GR)	1166
MANDO DEL MALACATE (GR)	1174
GRUPO DE CANTONERA Y CUCHILLA	1175
PLANCHA DE DESGASTE (GR)	1183
DESGARRADOR (GR)	1185
DIENTE DE DESGARRADOR (GR)	1191
MALACATE - REMOLQUE (CONFIG)	1194
MALACATE DE REMOLQUE (GR)	1194
CABINA DEL OPERADOR	1196
AJUSTADOR DEL ASIENTO (GR)	1196
ACONDICIONADOR DE AIRE (CONFIG)	1200
ACONDICIONADOR DE AIRE (GR)	1202
APOYABRAZOS (CONFIG)	1213
POSABRAZOS (GR)	1214
CABINA (CONFIG)	1216
CABINA PARA TIEMPO FRÍO (CONFIG)	1230
CABINA (GR)	1234
COMPRESOR DE REFRIGERANTE (GR)	1238
CONDENSADOR DEL REFRIGERANTE Y MONTAJE (GR)	1250
CONDENSADOR DE REFRIGERANTE (GR)	1264
CONTROL ELECTRONICO DEL REDUCTOR DE LA LUZ INTERIOR DEL SISTEMA MONITOR (GR)	1269
CONTROL DE AGUA (GR)	1270
CONFIGURACIÓN DE TRANSFORMACIÓN	1271
EXTENSIÓN DEL RESPALDO (GR)	1272
VENTILADOR DESCONGELADOR (GR)	1274
PLANCHA DEL PISO (CONFIG)	1276
PROTECTOR CONTRA EL VANDALISMO (GR)	1277
CALEFACCIÓN (CONFIG)	1278
CALEFACCIÓN (GR)	1280
CALEFACCIÓN DE LA CABINA (GR)	1286
CAJA DE LA SUSPENSIÓN DEL ASIENTO (GR)	1298
INSTALACIÓN DE RADIO (GR)	1305
JUEGO DE RECONSTRUCCIÓN	1306
JUEGO DE VENTANAS	1306
REVESTIMIENTO DE LA CABINA (GR)	1307
TUBERÍAS DE ACONDICIONADOR DE AIRE (GR)	1308
TUBERÍAS DE LA CALEFACCIÓN (GR)	1324
RETROVISOR (GR)	1326
MÓDULO DEL OPERADOR (CONJ)	1328
MODULO ELECTRÓNICO DE CUATRO INDICADORES (GR)	1330
MÓDULO DEL TACÓMETRO Y DEL VELOCÍMETRO (GR)	1332
GRUPO DE MONTAJE DE LA CABINA	1334
GRUPO DE MONTAJE	1336
MONTAJE DE LA ESTRUCTURA ROPS (GR)	1337
CONFIGURACIÓN ESPECIAL PARA EL OPERADOR	1338
SOPORTE DEL RESPALDO (GR)	1344
CUBIERTA INFERIOR DEL ASIENTO DEL OPERADOR (GR)	1348
TABLERO DE INSTRUMENTOS (GR)	1350
PLATAFORMA DE LA CABINA (GR)	1354
RECLINACION DE ASIENTO (GR)	1362
SISTEMA ROPS (CONJ)	1363
ESTRUCTURA ROPS (GR)	1364
REJILLA PROTECTORA (GR)	1366
CONFIGURACIÓN DE ASIENTO	1367
CINTURÓN DE SEGURIDAD (GR)	1368
ASIENTO (GR)	1372
SUSPENSIÓN - ASIENTO CON (GR)	1388
INSONORIZADOR (CONFIG)	1402
ASIENTO CON SUSPENSIÓN (GR)	1404
TANQUE DEL LAVAPARABRISAS (GR)	1420
LAVAPARABRISAS DE LA VENTANA (GR)	1428
VENTANA CORREDIZA (CONJ)	1435
VENTANA DE LA CABINA (GR)	1436
LIMPIAPARABRISAS DE LA VENTANA (GR)	1452
PIVOTE DEL LIMPIADOR (GR)	1464
EQUIPOS Y SUMINISTRO DE SERVICIOS	1465
ETIQUETA DE ADVERTENCIA (GR)	1465
CALCOMANÍAS Y PLACAS DE IDENTIFICACIÓN (GR)	1468

CONTENIDO

Nombre	Página	Nombre	Página
INDICE DE NUMEROS DE PIEZA	B1		

ÍNDICE

Designação	Página
INFORMAÇÃO GERAL	A37
ALTERNATIVAS DE REPARO	A48
ADITIVOS SUPLEMENTARES DO LÍQUIDO ARREFECEDOR	A53
PEÇAS DE MANUTENÇÃO	A89
ÍNDICE	A177
MÁQUINA - ARRANJO	1
ARRANJO ÁRTICO	1
CLIMA FRIO - ARRANJO	1
SISTEMA ELETRÔNICO - MÁQUINA	1
MÁQUINA - TEMPO FRIO	2
GRUPO DE CONVERSÃO	2
RUÍDO - ARRANJO PARA SUPRESSÃO	3
ATERRO SANITÁRIO	4
MOTOR - ARRANJO	6
MOTOR	6
MOTOR BÁSICO	12
AJUSTADOR DE CORREIAS	12
EIXO-COMANDO DE VÁLVULA	20
TAMPA - BLOCO DO MOTOR	21
TAMPA - CAIXA DO VOLANTE	23
TAMPA - CAIXA DIANTEIRA	24
TAMPA - MECANISMO DAS VÁLVULAS	26
VIRABREQUIM	28
BLOCO DO MOTOR	34
CABEÇOTE DO MOTOR	41
AMORTECEDOR	56
COMANDO DO VENTILADOR	57
VOLANTE DO MOTOR	78
ENGRENAGENS DE DISTRIBUIÇÃO	80
ENGRENAGENS DE COMANDO TRASEIRO	82
CAIXA DO VOLANTE DO MOTOR	90
CAIXA DIANTEIRA	92
LEVANTAMENTO DO MOTOR	94
CÁRTER DO ÓLEO DO MOTOR	96
PISTÃO E BIELA	98
BUJÃO DO BLOCO DO CILINDRO	100
BUJÃO - CABEÇA DO CILINDRO	102
POLIA DO VIRABREQUIM	103
BALANCIM	105
SUPORTE DO MOTOR	106
MUNHÃO DO MOTOR	108
JOGO DE CORREIAS EM V	109
MECANISMO DAS VÁLVULAS	110
GARFO	111
SISTEMA DE LUBRIFICAÇÃO	113
FIXADORES - BOMBA DE ÓLEO DO MOTOR	113
BOCAL DE ENCHIMENTO DE ÓLEO DO MOTOR	114
ELIMINAÇÃO DE VAPORES DO CÁRTER	116
INDICADOR - NÍVEL DO ÓLEO (VARETA)	118
TUBOS - ÓLEO DO MOTOR	120
TUBOS - SUPRIMENTO DE ÓLEO	124
TUBOS - ÓLEO DO TURBOALIMENTADOR	130
ÓLEO - ARRANJO PARA TROCA RÁPIDA	132
PRÊ-LUBRIFICAÇÃO	134
BOMBA DE ÓLEO - MOTOR	140
VÁLVULA DO COMANDO DO VENTILADOR E MONTAGEM	142
SISTEMA DE ARREFECIMENTO	143
CONDICIONADOR DO LÍQUIDO ARREFECEDOR	143
ARREFECEDOR - ÓLEO DO MOTOR	145
COLMÉIA - ARREFECEDOR DE ÓLEO	146
VENTILADOR	147
VENTILADOR - VARIÁVEL	148
VENTILADOR DE SOPRO	150
VENTILADOR - ROTAÇÃO VARIÁVEL	152
TUBOS - ÁGUA	156
BOMBA DE ÁGUA	169
RADIADOR	178
TANQUE - LÍQUIDO ARREFECEDOR	183
TANQUE DE ÁGUA	184
SISTEMA DA ADMISSÃO DE AR E DE ESCAPE	192
PÓS-ARREFECEDOR A ÁGUA	192
PURIFICADOR DE AR	194
EJETOR DE POEIRA	197
JOGO DE INSTALAÇÃO	198
TUBOS - AR	200
COLETOR DE ESCAPE	204
SILENCIADOR	206
PRÉ-PURIFICADOR	207
BLINDAGEM DO COLETOR	210
TURBOALIMENTADOR	212
SISTEMA DE COMBUSTÍVEL	216
ADAPTADOR - ABASTECIMENTO RÁPIDO DE COMBUSTÍVEL	216
CONTROLE DO DESACELERADOR	228
COMANDO DA BOMBA HIDRÁULICA DO INJETOR	234

ÍNDICE

Designação	Página
FILTRO E TUBOS - COMBUSTÍVEL	246
FILTRO - COMBUSTÍVEL	248
FILTRO DE COMBUSTÍVEL E SEPARADOR DE ÁGUA	252
INJETOR DE COMBUSTÍVEL	255
JOGO DE RETENTOR	260
TUBOS - COMBUSTÍVEL	262
TUBOS - FILTRO DO COMBUSTÍVEL	264
TUBOS - INJETOR DA BOMBA HIDRÁULICA	268
BOMBA HIDRÁULICA E MONTAGEM - UNIDADE INJETORA	270
BOMBA DE INJEÇÃO DO COMBUSTÍVEL	286
BOMBA DE ESCORVA DO COMBUSTÍVEL	291
BOMBA DE ESCORVA DO COMBUSTÍVEL E DO FILTRO PRIMÁRIO	292
BOMBA HIDRÁULICA - UNIDADE INJETORA	294
TANQUE DE COMBUSTÍVEL	308
VÁLVULA DE CONTROLE DE PRESSÃO	314
SISTEMA ELÉTRICO E DE PARTIDA	315
ALARME	315
ALTERNADOR DE CORRENTE	316
BATERIA E CABOS / FIOS ELÉTRICOS	328
CONTROLE ELETRÔNICO E MONTAGEM	376
CONTROLE ELETRÔNICO E MONTAGEM - MOTOR	379
CONTROLE ELETRÔNICO	381
CONTROLE ELETRÔNICO DO MOTOR - CLASSIFICAÇÃO	384
CONTROLE ELETRÔNICO - MOTOR	387
CONTROLE DO TREM DE FORÇA	391
CONTROLE - NÃO PROGRAMADO	392
CONVERSOR ELÉTRICO	395
SISTEMA ELETRÔNICO - TREM DE FORÇA	396
FIXADORES - CHAVE GERAL	397
AQUECEDOR DO LÍQUIDO ARREFECEDOR	398
AQUECEDOR DO COMBUSTÍVEL	406
AQUECEDOR DA ÁGUA DO MOTOR	410
BLOCO DE JUNÇÃO	413
LÂMPADA - TETO	414
LÂMPADA - FAROL	415
SISTEMA DE ILUMINAÇÃO	420
ILUMINAÇÃO TRASEIRA	424
ILUMINAÇÃO	426
ILUMINAÇÃO - AUXILIAR	427
SISTEMA DE ILUMINAÇÃO - FARÓIS	429
ILUMINAÇÃO - DIANTEIRA	434
ILUMINAÇÃO - TRASEIRA	439
ILUMINAÇÃO - RÍPER	442
SENSOR MAGNÉTICO	443
SENSOR SUPRESSOR - CONTROLE DE RETARDAMENTO AUTOMÁTICO	444
SENSOR - NÍVEL DE COMBUSTÍVEL	445
EMISSOR - POSIÇÃO	446
SENSOR - PRESSÃO	453
SENSOR DE VELOCIDADE	463
SENSOR - TEMPERATURA	468
GR. DE SERVICO - TREM DE FORÇA	471
SOLENÓIDE DO MOTOR DE ARRANQUE	472
AUXILIAR DE PARTIDA A ÉTER	474
PARTIDA EM TEMPO FRIO - ARRANJO	476
MOTOR ELÉTRICO DE PARTIDA	484
INTERRUPTOR DE DERIVAÇÃO	497
CHAVE GERAL	499
INTERRUPTOR - FLUXO	500
INTERRUPTOR - ALAVANCA	502
INTERRUPTOR - PARTIDA	503
INTERRUPTOR - CRONÔMETRO	504
CABOS/FIOS ELÉTRICOS DO CONSOLE	506
CABOS/FIOS ELÉTRICOS - MOTOR	520
CABOS/FIOS ELÉTRICOS - PLATAFORMA	522
CABOS/FIOS ELÉTRICOS - INJETOR	530
TREM DE FORÇA	531
SEMI-EIXO - TREM DE FORÇA	531
CARCAÇA DAS ENGRENAGENS PLANETÁRIAS E COMPONENTES	536
CONTROLE E MONTAGEM - TRANSMISSÃO	538
CONTROLE HIDRÁULICO DA TRANSMISSÃO	540
ARREFECEDOR DE ÓLEO DA TRANSMISSÃO	546
ACOPLAMENTO DA BOMBA	547
DRENO - ECOLOGIA	548
FILTRO - ÓLEO	550
COMANDO FINAL	558
COROA E ENGRENAGEM DE TRANFERÊNCIA	598
PROTETOR - EIXO DE TRANSMISSÃO	600
TUBOS - ÓLEO DA TRANSMISSÃO	602
COLETOR E VÁLVULA	626
MONTAGEM - TRANSMISSÃO	628
ENGRENAGENS PLANETÁRIAS - TRANSMISSÃO	630
BOMBA DE ENGRENAGENS	634

ÍNDICE

Designação	Página
SEGMENTO DA RODA MOTRIZ	639
EIXO DA TRANSMISSÃO	641
CONVERSOR DE TORQUE	642
TRANSMISSÃO	648
JUNTA UNIVERSAL	649
VÁLVULA PILOTO E MONTAGEM	650
VÁLVULA DE CONTROLE	652
VÁLVULA DE MODULAÇÃO	660
VÁLVULA DE CONTROLE DE PRESSÃO	662
VÁLVULA DE PRIORIDADE	664
VÁLVULA DE ALÍVIO	666
VÁLVULA SELETORA	670
VÁLVULA SOLENÓIDE	671
VÁLVULA DE CONTROLE - TRANSMISSÃO	673
CHASSI E CARROCERIA	678
CAIXA E CHASSI	678
CONTRAPESO TRASEIRO E BARRA	684
CONTRAPESO	686
TAMPA - MUNHÃO	690
BARRA DE TRAÇÃO	692
COBERTURA DO MOTOR	694
COBERTURA - PÁRA-LAMA	700
PÁRA-LAMA	706
GRADE DO RADIADOR CONTRA EROSÃO	713
PROTETOR - COMANDO FINAL	714
PROTEÇÃO COM DOBRADIÇA	716
PROTETOR - RODA-GUIA	718
PROTETOR INFERIOR	720
PROTETOR - EIXO PIVÔ	724
PROTETOR - RADIADOR	726
PROTETOR - TRASEIRO	730
PROTETOR - ROCHA	732
GUIA - VEDADOR	734
CAPÔ E PROTETOR	736
TRINCO	741
MATERIAL RODANTE	742
BARRA LIMPADORA DOS ROLOS	742
BARRA DE SUSPENSÃO	746
BARRA LIMPADORA DOS ROLOS	762
TAMPA DA RODA-GUIA	764
TAMPA - ROLETE DAS ESTEIRAS	766
ARMAÇÃO - TENSOR TELESCÓPICO	767
ARMAÇÃO TELESCÓPICA DA MOLA TENSORA	768
RODA GUIA DAS ESTEIRAS	782
RODA-GUIA DAS ESTEIRAS	783
ELO DA ESTEIRA	792
LUBRIFICAÇÃO-BARRA EQUALIZADORA	796
EIXO PIVÔ - LUBRIFICAÇÃO	798
ROLETE SUPERIOR DA ESTEIRA	802
ROLETE DE ESTEIRA DE FLANGE DUPLO	805
ROLETE DE ESTEIRA DE FLANGE SIMPLES	810
SUSPENSÃO - TRUQUE	815
SUSPENSÃO	816
SUSPENSÃO - TRUQUE	817
AJUSTADOR DE ESTEIRAS E MOLA TENSORA	822
ESTEIRA	836
MATERIAL RODANTE	838
SISTEMA DE DIREÇÃO E DE FREIO	844
AJUSTADOR DO CONTROLE DA DIREÇÃO E TRANSMISSÃO	844
EMBREAGEM DE DIREÇÃO E FREIOS	848
CONTROLE DO FREIO	852
CONTROLE DO FREIO DE ESTACIONAMENTO	858
CONTROLE DE DIREÇÃO E TRANSMISSÃO	860
RETEM	868
MECANISMO DE DIREÇÃO	870
COLETOR E VÁLVULA	874
SUPORTE - CONTROLE	876
VÁLVULA DA DIREÇÃO E MONTAGEM	877
VÁLVULA DE CONTROLE	878
VÁLVULA SOLENÓIDE	880
SISTEMA HIDRÁULICO	882
CARTUCHO - BOMBA DE PALHETAS	882
CONTROLE DE INCLINAÇÃO DUPLA	884
CONTROLE HIDRÁULICO	886
ARREFECEDOR DO ÓLEO HIDRÁULICO	893
TAMPA - TANQUE HIDRÁULICO	896
CILINDRO DUPLO DE INCLINAÇÃO E TUBOS	897
CILINDRO DUPLO DE INCLINAÇÃO	897
CILINDRO - LEVANTAMENTO DA LÂMINA	898
CILINDRO - INCLINAÇÃO DA LÂMINA	902
CILINDRO DE INCLINAÇÃO DUAL	908
CILINDRO DE LEVANTAMENTO DO RIPER	912
CILINDRO DO SACADOR DE PINO DO RIPER	924
CILINDRO DE INCLINAÇÃO DO RÍPER	926
TUBOS - APLICAÇÃO ÁRTICA	932
TUBOS - CILINDRO DE LEVANTAMENTO	934

ÍNDICE

Designação	Página
TUBOS - CILINDRO DO SACA-PINO	937
TUBOS - BOMBA	942
TUBOS - RIPER	964
TUBOS - INCLINACÃO	971
TUBOS - CILINDRO DE INCLINAÇÃO	972
TUBOS - GUINCHO	986
BOMBA E TUBOS	990
BOMBA DE ENGRENAGENS	991
BOMBA DE PALHETAS	994
TANQUE HIDRÁULICO E FILTRO	998
VÁLVULA E CILINDRO	1000
VÁLVULA DE CONTROLE E MONTAGEM	1016
GR. DE VÁLVULAS DE CONTROLE	1018
GRUPO DE VÁLVULAS DE CONTROLE - TRIPLO	1020
VÁLVULA DE DERIVAÇÃO	1022
VÁLVULA DE RETENÇÃO	1023
VÁLVULA DE CONTROLE	1024
VÁLVULA DE CONTROLE PILOTO	1038
VÁLVULA DE CONTROLE DE PRESSÃO	1040
VÁLVULA DE QUEDA RÁPIDA	1041
VÁLVULA DE ALÍVIO	1043
VÁLVULA SELETORA E CONTROLE DE PRESSÃO	1044
VÁLVULA DE SEPARAÇÃO	1046
VÁLVULA SOLENÓIDE	1047
VÁLVULA DE CONTROLE DE INCLINAÇÃO	1058
ACESSÓRIOS	1060
BLOCO DE EMPUXO	1060
TIRANTE DA LÂMINA	1064
LÂMINA	1065
FILTRO - DERIVAÇÃO	1069
CAIXA - GUINCHO	1070
EMBREAGEM E ENGRENAGEM	1074
CONTROLE DO GUINCHO DE REBOQUE	1082
CONTROLE DO GUINCHO	1086
TAMPA - EMBARQUE	1088
ROLDANAS DE GUIA DO GUINCHO	1089
ARMAÇÃO DO RIPER	1090
ENGRENAGEM DO ACESSÓRIO	1100
GUIA DOS ROLETES	1101
INSTALACÃO DO GUINCHO	1102
JOGO DE GAXETA	1102
ELO ESTABILIZADOR	1106
ARTICULAÇÃO DO ACESSÓRIO	1108
MONTAGEM - CILINDRO	1114
MONTAGEM - BOMBA	1115
MONTAGEM - RIPER	1116
MONTAGEM - GUINCHO	1124
SACA-PINO	1125
BRAÇO DE EMPUXO	1130
BRAÇO DE EMPUXO - ESQUERDO	1131
BRAÇO DE EMPUXO - DIREITO	1132
RIPER	1133
FILTRO - MAGNÉTICO	1136
MUNHÃO DA LÂMINA	1138
VÁLVULA DE CONTROLE DE PRESSÃO	1144
VÁLVULA SELETORA	1146
VÁLVULA DE CONTROLE DO GUINCHO	1148
FERRAMENTAS DE TRABALHO	1149
CANTO DE LÂMINA	1149
LÂMINA E BORDA CORTANTE	1149
LÂMINA	1152
LÂMINA SEMI-UNIVERSAL	1154
LÂMINA UNIVERSAL	1156
LÂMINA SEMI-UNIVERSAL	1159
LÂMINA UNIVERSAL	1166
COMANDO DO GUINCHO	1174
BEIRA - PONTA CORTANTE	1175
PLACA DE DESGASTE	1183
RIPER	1185
DENTE DO RÍPER	1191
REBOQUE - GUINCHO	1194
POSTO DO OPERADOR	1196
AJUSTADOR DO ASSENTO	1196
CONDICIONADOR DE AR	1200
BRAÇO DO ASSENTO	1213
CABINE	1216
CABINE PARA USO EM TEMPO FRIO	1230
CABINE	1234
COMPRESSOR DE REFRIGERANTE	1238
CONDENSADOR DO REFRIGERANTE E MONTAGEM	1250
CONDENSADOR DE REFRIGERANTE	1264
CONTROLE - REDUTOR DE LUMINOSIDADE DO SIST. DE MONITORIZAÇÃO	1269
CONTROLE DE ÁGUA	1270
GR. DE CONVERSÃO	1271
EXTENSÃO - ENCOSTO	1272
DESCONGELADOR	1274
CHAPA DO PISO	1276
PROTETOR CONTRA VANDALISMO	1277
AQUECEDOR	1278
AQUECEDOR DA CABINE	1286
CAIXA - SUSPENSÃO DO ASSENTO	1298
INSTALAÇÃO DO RÁDIO	1305
JOGO DE RECONDICIONAMENTO	1306
JOGO-JANELA	1306
REVESTIMENTO DA CABINE	1307
TUBOS - AR CONDICIONADO	1308

ÍNDICE

Designação	Página
TUBOS - AQUECEDOR	1324
ESPELHO RETROVISOR	1326
MÓDULO DO OPERADOR	1328
MÓDULO ELETRÔNICO DE QUATRO INDICADORES	1330
MÓDULO - VELOCÍMETRO E TACÔMETRO	1332
MONTAGEM - CABINE	1334
MONTAGEM DE RÁDIO DE FAIXA DE ONDA CIVIL	1336
MONTAGEM - ESTRUTURA ROPS	1337
OPERADOR - ESPECIAL	1338
FUNDO - ENCOSTO	1344
ASSENTO - FUNDO	1348
PAINEL DE INSTRUMENTOS	1350
PLATAFORMA DA CABINE	1354
RECLINAÇÃO - ASSENTO	1362
ESTRUTURA ROPS	1363
TELA DE PROTEÇÃO	1366
ASSENTO	1367
CINTO DE SEGURANÇA	1368
ASSENTO	1372
ASSENTO COM SUSPENSÃO	1388
RUÍDO - ARRANJO PARA SUPRESSÃO	1402
SUSPENSÃO - ASSENTO	1404
TANQUE - LAVADOR DE JANELA	1420
LAVADOR DO VIDRO	1428
JANELA DESLIZANTE	1435
JANELA DA CABINE	1436
LIMPADOR DO VIDRO	1452
PIVÔ DO LIMPADOR	1464
EQUIPAMENTO DE SERVIÇO E SUPRIMENTOS	1465
DECALQUE	1465
PLACA E DECALQUE	1468
ÍNDICE DE NÚMERO DE PEÇA	B1

INHALTSVERZEICHNIS

Bezeichnung	Seite
ALLGEMEINE HINWEISE	A41
REPARATURALTERNATIVEN	A49
KÜHLMITTELZUSATZ	A54
WARTUNGSTEILE	A102
STICHWORTVERZEICHNIS	A198
MASCHINE	1
KALTWETTERAUSRÜSTUNG	1
ELEKTRONIK - MASCHINE	1
KALTWETTERAUSRÜSTUNG	2
UMBAUSATZ	2
SCHALLDÄMPFUNG	3
ABFALLBESEITIGUNGSMONTAGE	4
MOTORAUSFÜHRUNG	6
MOTORAUSFÜHRUNG	6
MOTOR (GRUNDAUSFÜHRUNG)	12
RIEMENSPANNER	12
NOCKENWELLE	20
MOTORBLOCKDECKEL	21
SCHWUNGRADGEHÄUSEDECKEL	23
STIRNRADGEHÄUSEDECKEL	24
VENTILDECKEL	26
KURBELWELLE	28
MOTORBLOCK	34
ZYLINDERKOPF	41
DÄMPFER	56
LÜFTERANTRIEB	57
SCHWUNGRAD	78
STIRNRAD	80
ZAHNRADVORGELEGE	82
SCHWUNGRADGEHÄUSE	90
STIRNRADGEHÄUSE	92
MOTORHUBÖSE	94
ÖLWANNE	96
PLEUELSTANGE UND KOLBEN	98
ZYLINDERBLOCKSCHRAUBE	100
ZYLINDERKOPFSTOPFEN	102
KURBELWELLEN-RIEMENSCHEIBE	103
VENTILKIPPHEBEL	105
MOTORAUFHÄNGUNG	106
MONTAGEZAPFEN	108
KEILRIEMENSATZ	109
VENTILSTEUERUNG	110
JOCHSATZ	111
SCHMIERSYSTEM	113
ÖLPUMPEN-BEFESTIGUNGSTEILE	113
MOTORÖLEINFÜLLSTUTZEN	114
ENTDUNSTER	116
ÖLMESSSTAB	118
MOTORÖLLEITUNGEN	120
ÖLZUFUHRLEITUNGEN	124
TURBOLADERÖLLEITUNGEN	130
ÖLSCHNELLWECHSELANSCHLUSS	132
MOTORVORSCHMIERUNG	134
SCHMIERPUMPE	140
LÜFTERANTRIEBSVENTIL U. BEFESTIGUNGSSATZ	142
KÜHLSYSTEM	143
KÜHLWASSERZUSATZELEMENT	143
MOTORÖLKÜHLER	145
ÖLKÜHLERBLOCK	146
LÜFTER	147
LÜFTER (VERSTELLBAR)	148
DRUCKLÜFTER	150
LÜFTER, HÖHENVERSTELLBAR	152
KÜHLWASSERLEITUNGEN	156
KÜHLWASSERPUMPE	169
KÜHLER	178
KÜHLMITTELBEHÄLTER	183
WASSERTANK	184
LUFTEINLASS- UND ABGASSYSTEM	192
LADELUFTKÜHLER, WASSERGEKÜHLT	192
LUFTREINIGER	194
STAUBAUSWERFER	197
EINBAUSATZ	198
DRUCKLUFTLEITUNGEN	200
AUSPUFFKRÜMMER	204
SCHALLDÄMPFER	206
VORREINIGER	207
KRÜMMERSCHILD	210
TURBOLADER	212
KRAFTSTOFFSYSTEM	216
SCHNELLBETANKUNGSANSCHLUSS	216
GASREDUZIERGESTÄNGE	228
HYDRAULIKPUMPENANTRIEB	234
KRAFTSTOFFILTER UND LEITUNGEN	246
KRAFTSTOFFILTER	248
WASSERABSCHEIDER- U. KRAFTSTOFFILTER	252
KRAFTSTOFFEINSPRITZDÜSE	255
DICHTUNGSSATZ	260
KRAFTSTOFFLEITUNGEN	262
KRAFTSTOFFILTERLEITUNGEN	264
EINSPRITZLEITUNGEN - HYDRAULIKPUMPE	268
PUMPE UND BEFESTIGUNGSTEILE	270
KRAFTSTOFFEINSPRITZPUMPE	286

INHALTSVERZEICHNIS

Bezeichnung	Seite
KRAFTSTOFF-ENTLÜFTUNGSPUMPE	291
KRAFTSTOFFENTLÜFTUNGSPUMPE UND -HAUPTFILTER	292
PUMPENDÜSE, HYDRAULISCH	294
KRAFTSTOFFTANK	308
DRUCKSTEUERVENTIL	314
ELEKTRISCHE ANLAGE UND STARTSYSTEM	315
WARNVORRICHTUNG	315
DREHSTROMGENERATOR	316
BATTERIE UND VERDRAHTUNG	328
ELEKTRON. STEUERUNG UND ANBAUSATZ	376
STEUERUNGSEINHEIT, ELEKTRON. FÜR MOTOR UND BEFEST.	379
STEUERUNG, ELEKTRON.	381
MOTORNENNLEISTUNGSSTEUERUNG, ELEKTRON.	384
MOTORSTEUERUNG, ELEKTRON.	387
KRAFTÜBERTRAGUNGSSTEUERUNG	391
STEUERUNG - NICHT PROGRAMMIERT	392
ELEKTR. UMFORMER	395
KRAFTÜBERTRAGUNGSELEKTRONIK	396
HALTETEILE-TRENNSCHALTER	397
KÜHLMITTELHEIZUNG	398
KRAFTSTOFFHEIZUNG	406
UMLAUFKÜHLWASSERHEIZUNG	410
KLEMMLEISTE	413
FAHRERHAUSBELEUCHTUNG	414
ARBEITSLEUCHTEN	415
BELEUCHTUNGSANLAGE	420
HECKBELEUCHTUNG	424
BELEUCHTUNGSANLAGE	426
ZUSATZBELEUCHTUNG	427
ARBEITSLEUCHTEN	429
FRONTBELEUCHTUNG	434
HECKBELEUCHTUNG	439
BELEUCHTUNGSANLAGE (AUFREISSER)	442
AUSSCHALTER, MAGN.	443
AUTOM. DAUERBREMSENSTEUERUNTERDRÜCKUNGSSENSOR	444
KRAFTSTOFFSTANDSENSOR	445
STELLUNGSSENSOR	446
DRUCKSENSOR	453
DREHZAHLSENSOR	463
TEMPERATURSENSOR	468
ANTRIEBSSTRANG-WARTUNGSSATZ	471
MAGNETSPULE - ANLASSMOTOR (ELEKTR.)	472
ÄTHERSTARTHILFE	474
KALTWETTERSTARTANLAGE	476
STARTERMOTOR	484
UMGEHUNGSSCHALTER	497
TRENNSCHALTER	499
STRÖMUNGSSCHALTER	500
HANDGRIFFSCHALTER	502
STARTSCHALTER	503
TIMERSCHALTER	504
KONSOLENVERDRAHTUNG	506
MOTORVERDRAHTUNG	520
FAHRERPLATTFORMVERDRAHTUNG	522
VERDRAHTUNG (EINSPRITZEINHEIT)	530
KRAFTÜBERTRAGUNG	531
KRAFTÜBERTRAGUNGSACHSE	531
PLANETENANTRIEBSGEHÄUSE U. TEILE	536
GETRIEBESTEUERUNG UND BEFESTIGUNGSTEILE	538
GETRIEBEHYDRAULIK	540
GETRIEBEÖLKÜHLER	546
PUMPENANSCHLUSS	547
ABLASS (UMWELTFREUNDLICH)	548
ÖLFILTER	550
SEITENANTRIEB	558
TELLERRAD- UND VORGELEGERADSATZ	598
ANTRIEBSWELLENVERKLEIDUNG	600
ÖLLEITUNGEN - KRAFTÜBERTRAGUNG	602
KRÜMMER UND VENTIL	626
GETRIEBEAUFLAGER	628
PLANETENGETRIEBE	630
ZAHNRADPUMPE	634
KETTENRADSEGMENT	639
HAUPTANTRIEBSWELLE	641
DREHMOMENTWANDLER	642
GETRIEBE	648
KREUZGELENK	649
VORSTEUERVENTIL UND BEFESTIGUNGSTEILE	650
STEUERVENTIL	652
MODULATORVENTIL	660
DRUCKSTEUERVENTIL	662
VORRANGVENTIL	664
ÜBERDRUCKVENTIL	666
SCHALTVENTIL	670
MAGNETVENTIL	671
GETRIEBESTEUERVENTIL	673

INHALTSVERZEICHNIS

Bezeichnung	Seite
RAHMEN UND AUFBAU	678
RAHMEN UND GEHÄUSE	678
GEGENGEWICHT UND BALKEN, HINTEN	684
GEGENGEWICHT	686
MONTAGEZAPFENVERKLEIDUNG	690
ZUGHAKEN	692
MOTORVERKLEIDUNG	694
SCHUTZBLECHVERKLEIDUNG	700
SCHUTZBLECHE	706
SANDSTRAHLSCHUTZGITTER	713
SEITENANTRIEBSVERKLEIDUNG	714
VERKLEIDUNG, KLAPPBAR	716
LEITRADSCHUTZ	718
PANZERWANNE	720
DREHZAPFENVERKLEIDUNG	724
KÜHLERSCHUTZ	726
HECKVERKLEIDUNG	730
STEINSCHUTZ	732
SCHUTZDICHTUNG	734
MOTORHAUBE UND VERKLEIDUNG	736
VERRIEGELUNG	741
LAUFWERK	742
ABSTREIFBALKEN	742
QUERTRAVERSE	746
ABSTREIFBALKEN	762
LEITRADAUFSATZ	764
LAUFROLLENAUFSATZ	766
LAUFROLLENRAHMEN (TELESKOPRÜCKLAUF)	767
LEITRAD	782
KETTENGLIEDER	792
SCHMIERVORRICHTUNG - QUERTRAVERSE	796
ACHSWELLENSCHMIERUNG	798
TRAGROLLEN	802
DOPPELFLANSCHROLLEN	805
EINZELFLANSCHROLLEN	810
LAUFROLLENRAHMEN-KNICKFEDERUNG	815
FEDERUNG	816
LAUFROLLENRAHMEN-KNICKFEDERUNG	817
KETTENSPANNER UND -FEDERRÜCKLAUF	822
LAUFWERKSKETTE	836
LAUFWERKSRAHMEN	838
LENK- UND BREMSSYSTEM	844
LENK- UND GETRIEBEEINSTELLER	844
LENKKUPPLUNG UND BREMSE	848
BREMSGESTÄNGE	852
FESTSTELLBREMSGESTÄNGE	858
LENK- UND GETRIEBESTEUERUNG	860
SPERRE	868
LENKTRIEB	870
KRÜMMER UND VENTIL	874
STÜTZGRUPPE - STEUERUNG	876
LENKVENTIL U. BEFESTIGUNGSTEILE	877
STEUERVENTIL	878
MAGNETVENTIL	880
HYDRAULIKSYSTEM	882
FLÜGELZELLENPUMPENEINSATZ	882
DOPPELKIPPZYLINDERSTEUERUNG	884
HYDRAULIKSTEUERUNG	886
HYDRAULIKÖLKÜHLER	893
ZUGANGSKLAPPE - HYDRAULIKTANKKAPPE	896
DOPPELKIPPZYLINDER UND LEITUNGEN	897
DOPPELKIPPZYLINDER	897
PLANIERSCHILDHUBZYLINDER	898
PLANIERSCHILDKIPPZYLINDER	902
DOPPELNEIGEZYLINDER	908
AUFREISSERHUBZYLINDER	912
AUFREISSER-BOLZENZIEHERZYLINDER	924
AUFREISSERKIPPZYLINDER	926
LEITUNGEN FÜR DEN EINSATZ IN ARKTISCHEN UMGEBUNGSTEMPERATUREN	932
HUBZYLINDERLEITUNGEN	934
BOLZENZIEHERZYLINDERLEITUNGEN	937
HYDRAULIKPUMPE UND LEITUNGEN	942
AUFREISSERLEITUNGEN	964
KIPPZYLINDERLEITUNGEN	971
NEIGEZYLINDERLEITUNGEN	972
WINDEN-ÖLLEITUNGEN	986
PUMPE UND LEITUNGEN	990
ZAHNRADPUMPE	991
MESSERPUMPE	994
HYDRAULIKTANK UND SCHMIERFILTER	998
VENTIL UND ZYLINDER	1000
STEUERVENTIL UND BEFESTIGUNGSTEILE	1016
VENTILANORDNUNG	1018
VENTILSATZ (3-VENTIL)	1020
NEBENSTROMVENTIL	1022
SPERRVENTIL	1023
STEUERVENTIL	1024
VORSTEUERVENTIL	1038
DRUCKSTEUERVENTIL	1040
SCHNELLSENKVENTIL	1041

INHALTSVERZEICHNIS

Bezeichnung	Seite
ÜBERDRUCKVENTIL	1043
VENTIL - SCHALT- UND DRUCKSTEUERUNG	1044
PENDELVENTIL	1046
MAGNETVENTIL	1047
KIPPSTEUERVENTIL	1058
ARBEITSGERÄTE	1060
SCHUBBLOCK	1060
SCHILDSTREBE	1064
PLANIEREINRICHTUNG	1065
NEBENSTROMFILTER	1069
WINDENGEHÄUSE	1070
KUPPLUNG UND ANTRIEB	1074
ZUGWINDENSTEUERUNG	1082
WINDENSTEUERUNG	1086
VERSANDDECKEL	1088
ROLLENTURM	1089
AUFREISSERRAHMEN	1090
ZUSATZANTRIEB	1100
ROLLENFÜHRUNG	1101
WINDENEINBAUSATZ	1102
DICHTUNGSSATZ	1102
STABILISATORGELENK	1106
ARBEITSGERÄTEGESTÄNGE	1108
ZYLINDERAUFHÄNGUNG	1114
PUMPENAUFHÄNGUNG	1115
AUFREISSERBEFESTIGUNG	1116
SEILWINDENAUFHÄNGUNG	1124
BOLZENZIEHER	1125
SCHUBARM	1130
SCHUBARM, LINKS	1131
SCHUBARM, RECHTS	1132
AUFREISSER - TEILLISTE	1133
MAGNETSIEB	1136
MONTAGEZAPFEN (PLANIERSCHILDEINRICHTUNG)	1138
DRUCKSTEUERVENTIL	1144
SCHALTVENTIL	1146
WINDENSTEUERVENTIL	1148
ARBEITSGERÄTE	1149
ENDMESSER	1149
SCHILD UND SCHNEIDMESSER	1149
SCHEIBENWISCHERBLATT	1152
SU-SCHILD	1154
U-SCHILD	1156
SU-SCHILD	1159
U-SCHILD	1166
SEILWINDENANTRIEB	1174
SCHNEIDMESSER UND EINSATZSTÜCK	1175
VERSCHLEISSPLATTEN	1183
AUFREISSER	1185
AUFREISSERZAHN	1191
ZUGWINDE	1194
FAHRERHAUS	1196
FAHRERSITZVERSTELLER	1196
KLIMAANLAGE	1200
ARMLEHNE	1213
FAHRERHAUS	1216
FAHRERHAUS (FÜR TIEFE UMGEBUNGSTEMPERATUREN)	1230
FAHRERHAUS	1234
KÄLTEMITTELKOMPRESSOR	1238
KÄLTEMITTELKONDENSATOR U. BEFESTIGUNGSTEILE	1250
KÄLTEMITTELKONDENSATOR	1264
ÜBERWACHUNGSSYSTEMDIMMER - STEUERUNG	1269
WASSERREGELUNG	1270
UMBAUSATZ	1271
RÜCKLEHNENVERLÄNGERUNG	1272
ENTFROSTERGEBLÄSE	1274
BODENPLATTE	1276
SCHUTZVERKLEIDUNG	1277
HEIZUNG	1278
FAHRERHAUSHEIZUNG	1280
FAHRERSITZFEDERUNGSGEHÄUSE	1298
RADIOEINBAUSATZ	1305
KÜHLWASSERPUMPEN-REGENERIERSATZ	1306
FENSTERSATZ	1306
FAHRERHAUSAUSKLEIDUNG	1307
KLIMAANLAGENLEITUNGEN	1308
HEIZUNGSLEITUNGEN	1324
RÜCKSPIEGEL	1326
FAHRERMODUL	1328
MODUL - VIER ELEKTRON. ANZEIGEN	1330
GESCHWINDIGKEITS- U. DREHZAHLMESSERMODUL	1332
FAHRERHAUSANBAUSATZ	1334
ÜBERROLLSCHUTZAUFLAGER	1337
FAHRERHAUS - SONDERAUSRÜSTUNG	1338
SCHALE - RÜCKENLEHNE	1344
FAHRERSITZVERKLEIDUNG	1348
INSTRUMENTENTAFEL	1350
FAHRERPLATTFORM	1354
VERSTELLBARER SITZ	1362
ÜBERROLLSCHUTZ	1363
SCHUTZGITTER	1366
FAHRERSITZ	1367
SICHERHEITSGURT	1368
FAHRERSITZ	1372
SCHWINGSITZ	1388
SCHALLDÄMPFUNG	1402
FAHRERSITZFEDERUNG	1404

INHALTSVERZEICHNIS

Bezeichnung	Seite
SCHEIBENWASCHMITTELBEHÄL-TER	1420
SCHEIBENWASCHANLAGE	1428
SCHIEBEFENSTER	1435
FAHRERHAUSFENSTER	1436
SCHEIBENWISCHER	1452
WISCHERARM	1464
WARTUNGSAUSRÜSTUNG UND -ZUBEHÖR	1465
AUFKLEBER	1465
SCHILD UND AUFKLEBER	1468
ERSATZTEILNUMMERNINDEX	B1

GENERAL INFORMATION

1. MACHINE IDENTIFICATION

Caterpillar machines are identified by Product Identification Numbers (PIN). Some components included in a machine may be identified by Serial Numbers (S/N). Typical components that will be serialized include engines, transmissions, bulldozers, and rippers. The machine and engine are further identified by arrangement numbers and in some cases modification numbers. These numbers are shown on the product identification plate(s) and on the master plate in the operator's compartment.

Caterpillar dealers need all of these numbers to determine accurate parts identification.

SIS ***New Feature***

Effective First Quarter 2001 the Caterpillar Product Identification Number (PIN) will change from 8 to 17 characters. In an effort to provide uniform equipment identification, Caterpillar and other construction equipment manufacturers are moving to comply with the latest version of the product identification numbering standard. Non-road machine PINs are defined by ISO 10261. The new PIN format will apply to all Caterpillar machines and generator sets. The PIN plates and frame marking will display the 17 character PIN. The new format will look like the following:

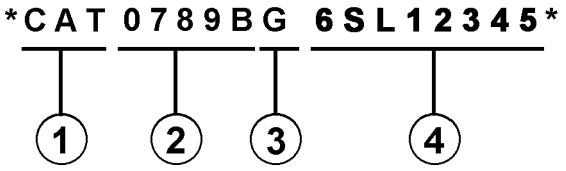

Where:

1. Caterpillar's World Manufacturing Code (characters 1-3)

2. Machine Descriptor (characters 4-8)

3. Check Character (character 9)

4. Machine Indicator Section (MIS) or Product Sequence Number (characters 10-17). These were previously referred to as the Serial Number.

Machines and generator sets produced before First Quarter 2001 will maintain their 8 character PIN format.

Components such as engines, transmissions, axles, etc. and work tools will continue to use an 8 character Serial Number (S/N).

2. ORDERING PARTS

⚠ WARNING

When replacement parts are required for this product Caterpillar recommends using Caterpillar replacement parts or parts with equivalent specifications including, but not limited to, physical dimensions, type, strength and material.

Failure to heed this warning can lead to premature failures, product damage, personal injury or death.

Quality Caterpillar replacement parts are available from Caterpillar dealers throughout the world. Their parts inventories are up to date and include all parts normally required to protect your investment in Caterpillar machines. Dealers may offer repair kits or remanufactured parts to allow selection of the most effective repair alternative for a particular situation. When ordering parts, your order should specify the quantity, part number, part name, and the serial number/product identification number of the machine for which the parts are needed.

3. PARTS MANUAL ORGANIZATION

Product information in this manual is presented as "information elements" that represent all of the components for the specific model. Engine Arrangement and Seat Group are examples of information elements. The information elements are organized alphabetically by part name and secondarily by part number within each major section of the manual.

4. TABLE OF CONTENTS

SIS ***New Feature***

A table of contents (TOC) is found at the beginning of the manual. The TOC lists each section of the manual with a complete list of all information elements organized as they appear in the manual. Page numbers are provided for quick reference to detailed parts identification illustrations and serviceable consist lists.

5. MAINTENANCE PARTS INDEX

The Maintenance Parts Index, located near the beginning of the manual, references most frequently used maintenance part numbers, providing description, quantity, usage and page number. This information is organized alphabetically by part description.

6. INDEX

The index located near the front of the manual is an alphabetical listing of all information elements included in the manual. Page numbers are provided for quick reference to detailed parts identification illustrations and serviceable consist lists.

7. PART NUMBER INDEX

A numerical index listing all part numbers and the corresponding page number(s) appears at the back of the manual.

8. CAPTIONS

Captions located at the top of each page of an information element identify the part number and part name along with additional descriptive information. PIN and S/N information found in each caption should be used to select correct information for a specific machine. Field replacement options, identification of optional attachment components, and where used ("part of") information is also provided.

SIS ***New Feature***

The first line of a caption is shown in larger type font to indicate the beginning of an information element. Captions for additional pages that may be required to illustrate an information element will be shown in standard type font and will include the term *(contd.)* .

9. NON-SERVICED PARTS

SIS ***New Feature***

In some instances it is necessary to display non-serviced parts that are a link to a lower level serviceable consist lists. These non-serviced part numbers are shown in *italic* type indicating that they are not available.

10. PARTS LIST REFERENCE NUMBERS

SIS ***New Feature***

Numbers shown in the Ref No column correspond to numbers used in the associated graphic(s). An alphabetic suffix may be added to a reference number to identify lower level consist items. Numbers shown in the Graphic Ref column refer to the graphic number identifier displayed in the lower left corner of each illustration. The Graphic Ref number may be used in combination with the item Ref No to determine the correct part number. There may be intentional omission of a Ref No in a consist list as information is updated to reflect the latest serviceable part numbers.

11. INDENTED PART NAMES

When a part name is indented in a parts list, it is part of (included in) the group or assembly under which it is indented.

12. ILLUSTRATION REFERENCE LETTERS

When necessary, illustrations contain reference letters (A, B, C etc.) that are intended to track lines and harnesses from one point to another. They are also used to show where to reconnect illustrations that have been separated.

13. ABBREVIATIONS AND SYMBOLS

O.D. – Outside Diameter
I.D. – Inside Diameter
A – Not Part Of This Group
B – Use As Required
C – Change From Previous Type
D – Order By The Meter
E – Order By The Centimeter
F – Not Shown
G – Order By The Inch
I – See Hose Fabrication Guide
M – Metric Part
R – Remfg Part May Be Available
Y – Separate Illustration
Z – Not Serviced Separately

NOTE:

Continuing improvement and advancement of product design may cause changes to your machine which may not be included in this publication. Whenever a question arises regarding your Caterpillar product or this publication, please consult your Caterpillar dealer for the latest available information.

FRAME AND BODY

8E-3299 PLATFORM GP-CAB

PIN 38K1-99999

SMCS-7253 — 100090751

NOTE	REF NO	GRAPHIC REF	PART NUMBER	QTY	PART NAME 1 2 3 4 5 (PRODUCT LEVEL)	SEE PAGE
	1	1	3T-3953	1	PLATE AS	
	2	1	6B-3062	25	BOLT (3/8-16X.750IN)	
	3	1	6P-1075	41	WASHER-HARD (3MM THK)	
	4	1	9P-1444	2	SUPPORT AS-FOOT	
	5	1	6P-2229	19	BOLT (1/2-13X1IN)	
		1	6P-[illegible]	19	WASHER-HARD (4MM THK)	
	6	1	8E-8194	1	COVER AS-LH	
		1	9F-2979	5	NUT-WELD (3/8-16 THD)	
		1	1P-8199	1	CLIP	
	7	1	7E-3411	4	COVER	
	8		6J-0468	19	SCREW-HEAD (3/8-16X.875IN)	
	9	1	[illegible]474	1	COVER	
		1	8E-8972	1	GASKET	
	10	1	8E-3248	1	[illegible]	
		1	8E-2250	1	GASKET	
	11	1	3T-3936	1	HANDHOLD	
	12	1	8E-8976	1	COVER AS	
		1	9F-2979	8	NUT-WELD (3/8-16 THD)	
		1	8E-8978	1	GASKET	
	13	1	7T-0131	1	FLOORPLATE AS	
		1	1F-0748	4	NUT-WELD (1/2-13 THD)	
	14	1	7V-8087	1	PLUG-BUTTON	
	15	1	7T-0136	1	PLATE AS	
		1	9F-2979	5	NUT-WELD (3/8-16 THD)	
	16	1	7T-8066	1	COVER	
		1	7T-0779	1	GASKET	
	17	1	3T-3951	1	PLATE AS	
	18	1	6T-8364	4	BOLT (1/4-20X.625IN)	
M		1	6T-4205	4	WASHER-HARD (2MM THK)	
	19	1	6X-8464	1	FLOOR MAT	
	20	1	8E-8846	1	MODULE AS-OPERATOR	
	21	1	3T-3934	1	HANDHOLD	
	22	1	9P-8571	2	PLUG	
	23	2	6T-8364	4	BOLT (1/4-20X.625IN)	
M		2	6T-4205	4	WASHER-HARD (2MM THK)	
	24	2	6B-3062	17	BOLT (3/8-16X.750IN)	
	25	2	6P-1075	21	WASHER-HARD (3MM THK)	
	26	2	7T-0136	1	SEAL	
	27	2	7X-0378	2	BOLT (3/4-10X5IN)	
		2	7X-0682	2	WASHER-HARD (6MM THK)	
	28	2	3T-3482	2	PLATE	
	29	2	3T-8290	1	PLATE AS	
		2	7E-4528	6	SPACER	
	30	2	3T-8281	1	SEAL	
	31	2	7E-8817	1	GASKET	
	32	2	7E-8915	1	COVER AS	
		2	2E-2376	2	WASHER	
		2	6P-8026	2	SCREW-KNURLED	
	33	2	9W-3429	1	COVER	
	34	2	8E-8897	1	COVER	
	35	2	6D-3031	8	SCREW-SOCKET HEAD	
	36	2	9W-3142	8	MOUNTING	
	37	2	9W-9027	2	PLATE	
	38	2	7X-0300	2	BOLT (7/8-9X6IN)	
		2	7X-0672	2	WASHER-HARD	
	39	2	4L-6454	4	BOLT (3/8-16X1.0IN)	
	40	2	3T-4788	1	COVER	

12 FRAME AND BODY — 1 of 4 — SELP4570-01

FRAME AND BODY

8E-3299 PLATFORM GP-CAB *(contd.)* — 100090751

NOTE	REF NO	GRAPHIC REF	PART NUMBER	QTY	PART NAME 1 2 3 4 5 (PRODUCT LEVEL)	SEE PAGE
	41	2	8E-2515	1	COVER	
	42	2	7T-0134	1	PLATE	
	43	2	7T-0138	1	GASKET	
	44	2	7E-8724	1	GASKET	
	45	2	7E-8723	1	COVER	
	46	2	6V-1960	2	PLUG-BUTTON	

M-METRIC PART

SELP4570-01 — 2 of 4 — FRAME AND BODY 13

FRAME AND BODY

8E-3299 PLATFORM GP-CAB *(contd.)* — 100090751

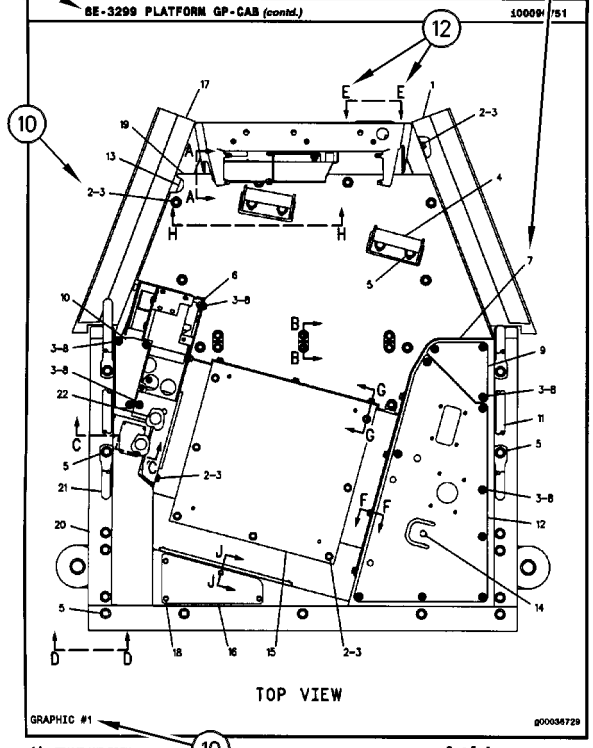

GRAPHIC #1 — g00036729

14 FRAME AND BODY — 3 of 4 — SELP4570-01

FRAME AND BODY

8E-3299 PLATFORM GP-CAB *(contd.)* — 100090751

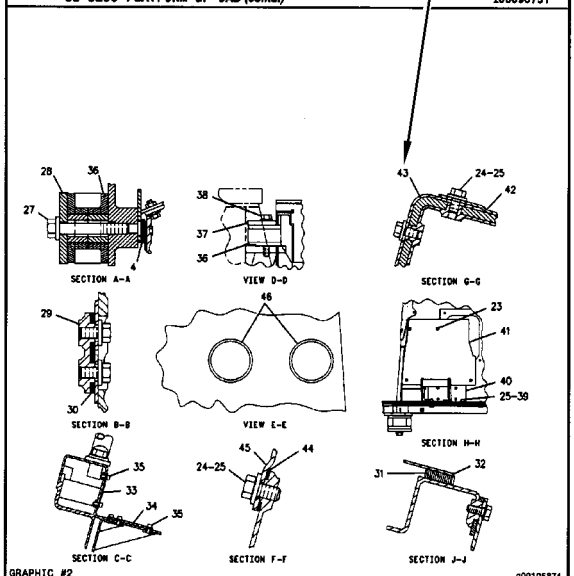

GRAPHIC #2 — g00105874

SELP4570-01 — 4 of 4 — FRAME AND BODY 15

1. IDENTIFICATION DE LA MACHINE

Toutes les machines Caterpillar portent un numéro d'identification (PIN). Certains composants des machines peuvent porter des numéros de série (S/N). En général, parmi les composants qui portent des numéros de série il y a les moteurs, les transmissions, les bulldozers et les rippers. En plus, la machine et le moteur peuvent recevoir des numéros de version, et dans certains cas, de modification. Ces numéros figurent sur les plaques de numéro de série et sur la plaque signalétique principale qui se trouve dans le poste de conduite.

Les concessionnaires Caterpillar doivent connaître tous ces numéros pour identifier correctement les pièces.

SIS ***Nouvelle Caractéristique***

À partir du premier trimestre 2001, le numéro d'identification produit (PIN) Caterpillar passe de 8 à 17 caractères. Afin de permettre une identification uniforme des matériels, Caterpillar et d'autres constructeurs de machines de travaux publics s'efforcent de se conformer à la norme la plus récente portant sur les numéros d'identification des produits. Les numéros d'identification (PIN) de machines de chantier sont définis par la norme ISO 10261. Le nouveau format du numéro d'identification est valable pour toutes les machines et tous les groupes électrogènes Caterpillar. Le numéro d'identification produit (PIN) figurant sur la plaque et sur le châssis se composera de 17 caractères. Le nouveau format ressemblera à ceci:

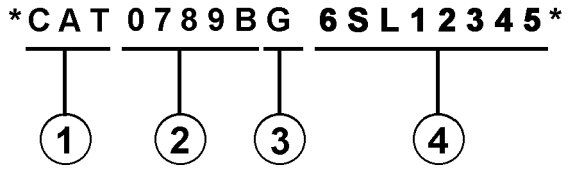

Il se décomposera de la façon suivante:

1. Code international de fabrication de Caterpillar (caractères 1 à 3)

2. Descriptif de la machine (caractères 4 à 8)

3. Contrôle (caractère 9)

4. Indicateur machine (MIS) ou numéro de séquence produit (caractères 10 à 17). Ceux-ci étaient auparavant désignés sous le terme de numéro de série.

Les machines et les groupes électrogènes construits avant le premier trimestre 2001 garderont le format à 8 caractères du numéro d'identification produit (PIN).

Les organes tels que les moteurs, les boîtes de vitesses, les essieux, etc., continueront d'être désignés par un numéro de série (S/N) à 8 caractères.

2. COMMANDE DE PIÈCES

⚠ DANGER

Lorsqu'il faut remplacer des pièces de rechange pour ce produit Caterpillar recommande d'utiliser les pièces de rechange Caterpillar ou les pièces qui ont des spécifications équivalentes dont les dimensions physiques, le type, la force et le matériau. Ces équivalences ne se limitent pas à l'énoncé précédent.

L'inobservation de cette mise en garde peut entraîner des défaillances prématurées, des dommages au produit, des blessures ou même la mort.

Les concessionnaires Caterpillar fournissent dans le monde entier des pièces de rechange de qualité Caterpillar. Leurs stocks de pièces sont constamment réapprovisionnés et comptent toutes les pièces nécessaires pour assurer la bonne marche de vos machines Caterpillar. Certains concessionnaires proposent également des kits de réparation ou des pièces rénovées, ce qui permet de choisir la solution la plus économique dans une situation donnée. Lors des commandes de pièces, mentionner la quantité, le numéro et la désignation des pièces ainsi que le numéro de série ou le numéro d'identification (PIN) de la machine pour laquelle ces pièces sont requises.

3. ORGANISATION DU CATALOGUE DE PIÈCES

Les renseignements sur les produits sont présentés sous forme de "Information element" (élément d'information) représentant tous les composants d'un modèle donné. "Engine Arrangement" (version de moteur) et "Seat Group" (assemblage de siège)" sont des exemples d'éléments d'information. Les éléments d'information sont classés par ordre alphabétique par la désignation standard des pièces et par numéros de pièces dans chaque partie importante du manuel.

4. TABLE DES MATIÈRES

SIS *Nouvelle Caractéristique*

La table des matières se trouve au début du manuel. La table des matières fournit la liste de tous les chapitres du manuel avec une liste complète de tous les éléments d'information classés par ordre d'apparition dans le manuel. Les numéros de page sont fournis afin que l'utilisateur puisse trouver rapidement les illustrations détaillées concernant l'identification des pièces et les listes des pièces d'entretien.

5. INDEX DES PIÈCES D'ENTRETIEN

La rubrique "Index des pièces d'entretien" qui se trouve au début du manuel renvoie aux pièces d'entretien les plus fréquemment utilisées en précisant la désignation, la quantité, là où la pièce est utilisée et le numéro de page. Ces pièces sont classés par ordre alphabétique.

6. INDEX

L'index qui se trouve vers le début du manuel est une liste alphabétique de tous les éléments d'information du manuel. Les numéros de page sont fournis afin que l'utilisateur puisse trouver rapidement les illustrations détaillées concernant l'identification des pièces et les listes des pièces d'entretien.

7. INDEX DES NUMÉROS DE PIÈCES

Une liste numérique de tous les numéros de pièces et des pages correspondantes se trouve à la fin du manuel.

8. LÉGENDES

Les légendes qui se trouvent en haut de chaque page de chaque élément d'information fournissent le numéro de pièce, la désignation ainsi que des renseignements supplémentaires sur les pièces. Les renseignements concernant les numéros de série (S/N) qui se trouvent dans chaque légende doivent être utilisés pour sélectionner les informations correctes pour un moteur donné. Les informations concernant les options de remplacement sur le chantier, l'identification des composants des équipements offerts en option et les lieux d'application sont aussi fournies.

SIS *Nouvelle Caractéristique*

Les lettres de la première ligne d'une légende sont présentées en police plus grande afin d'indiquer le début d'une unité d'information. Les légendes qui pourraient être requises pour des pages supplémentaires afin d'illustrer une unité d'information seront présentées en police standard et comprendront le terme (à suivre).

9. PIÈCES NON FOURNIES

SIS *Nouvelle Caractéristique*

Dans certains cas, il est nécessaire d'indiquer les pièces non fournies qui sont en aval de la liste des pièces d'entretien. Les numéros des pièces non fournies dans la liste des pièces et les légendes seront en italique pour signaler qu'ils ne sont pas disponibles.

10. NUMÉROS DE RÉFÉRENCE DE LA LISTE DES PIÈCES

SIS *Nouvelle Caractéristique*

Les numéros indiqués dans la colonne des numéros de références correspondent aux numéros utilisés dans les illustrations auxquelles ils sont associés. Un suffixe alphabétique peut être ajouté à un numéro de référence pour identifier la liste des articles en aval. Les numéros indiqués dans la colonne de référence de l'illustration renvoient à l'identification du numéro affiché dans le coin inférieur gauche de chaque illustration. Le numéro de référence de l'illustration pourrait être utilisé avec le numéro de référence de l'article pour déterminer le numéro de pièce correct. Il peut y avoir une omission intentionnelle d'un numéro de référence dans une liste de pièces suite à la mise à jour des informations en vue de refléter les numéros de pièces les plus récentes.

11. DÉSIGNATIONS DE PIÈCES EN RETRAIT

Lorsqu'une désignation de pièce est en retrait, cela veut dire que l'article en regard fait partie de l'ensemble sous lequel il figure.

12. LETTRES DE RÉFÉRENCE DES ILLUSTRATIONS

Quand cela est nécessaire, les illustrations comportent des lettres de référence (A, B, C, etc.) pour montrer le trajet des canalisations et faisceaux de câbles d'un point à l'autre. Elles sont utilisées également pour indiquer où relier les illustrations séparées auparavant.

13. ABRÉVIATIONS ET SYMBOLES

O.D. – Diamètre extérieur
I.D. – Diamètre intérieur
A – Ne fait pas partie de ce groupe
B – Utiliser selon besoin
C – Modification
D – Commander par mètre
E – Commander par centimètre
F – Non représenté
G – Commander par pouce
I – Voir "Hose Fabrication Guide"
M – Pièce métrique
R – Pièce rénovée éventuellement disponible
Y – Illustration séparée
Z – Non fourni séparément

NOTA:

En raison du progrès technique et des améliorations continuelles apportées au matériel, votre machine comporte peut-être des modifications qui n'apparaissent pas dans la présente publication. En cas de doute sur un détail de votre machine Caterpillar ou sur le texte de la présente publication, adressez-vous à votre concessionnaire Caterpillar.

FRAME AND BODY

8E-3299 PLATFORM GP-CAB

PIN 38K1-99999

SMCS-7253 — 100090751

NOTE	REF NO	GRAPHIC REF	PART NUMBER	QTY	PART NAME 1 2 3 4 5 (PRODUCT LEVEL)	SEE PAGE
	1	1	3T-3953	1	PLATE AS	
	2	1	6B-3062	25	BOLT (3/8-16X.750IN)	
	3	1	6P-1075	41	WASHER-HARD (3MM THK)	
	4	1	9P-1444	2	SUPPORT AS-FOOT	
	5	1	6P-2229	19	BOLT (1/2-13X1IN)	
		1	6P-[illegible]	19	WASHER-HARD (4MM THK)	
	6	1	8E-8194	1	COVER AS-LH	
		1	9F-2979	5	NUT-WELD (3/8-16 THD)	
		1	1P-0199	1	CLIP	
	7	1	7E-3411	4	COVER	
	8		6J-0468	19	SCREW-HEAD (3/8-16X.875IN)	
	9	1	[illegible]474	1	COVER	
		1	8E-8972	1	GASKET	
	10	1	8E-3248	1	[illegible]	
		1	8E-2250	1	GASKET	
	11	1	3T-3936	1	HANDHOLD	
	12	1	8E-8976	1	COVER AS	
		1	9F-2979	8	NUT-WELD (3/8-16 THD)	
		1	8E-8978	1	GASKET	
	13	1	7T-0131	1	FLOORPLATE AS	
		1	1F-0749	4	NUT-WELD (1/2-13 THD)	
	14	1	7V-8087	1	PLUG-BUTTON	
	15	1	7T-0136	1	PLATE AS	
		1	9F-2979	5	NUT-WELD (3/8-16 THD)	
	16	1	7T-8066	1	COVER	
		1	7T-0779	1	GASKET	
	17	1	3T-3951	1	PLATE AS	
	18	1	6T-8364	4	BOLT (1/4-20X.625IN)	
M		1	6T-4205	4	WASHER-HARD (2MM THK)	
	19	1	6X-8464	1	FLOOR MAT	
	20	1	8E-8846	1	MODULE AS-OPERATOR	
	21	1	3T-3934	1	HANDHOLD	
	22	1	9P-8571	2	PLUG	
	23	2	6T-8364	4	BOLT (1/4-20X.625IN)	
M		2	6T-4205	4	WASHER-HARD (2MM THK)	
	24	2	6B-3062	17	BOLT (3/8-16X.750IN)	
	25	2	6P-1075	21	WASHER-HARD (3MM THK)	
	26	2	7T-0136	1	SEAL	
	27	2	7X-0378	2	BOLT (3/4-10X5IN)	
		2	7X-0682	2	WASHER-HARD (6MM THK)	
	28	2	3T-3482	2	PLATE	
	29	2	3T-8290	1	PLATE AS	
		2	7E-4528	6	SPACER	
	30	2	3T-8281	1	SEAL	
	31	2	7E-8817	1	GASKET	
	32	2	7E-8915	1	COVER AS	
		2	2R-2376	2	WASHER	
		2	6P-8026	2	SCREW-KNURLED	
	33	2	9W-3429	1	COVER	
	34	2	8E-8897	1	COVER	
	35	2	6D-3031	8	SCREW-SOCKET HEAD	
	36	2	9W-3142	8	MOUNTING	
	37	2	9W-9027	2	PLATE	
	38	2	7X-0380	2	BOLT (7/8-9X6IN)	
		2	7X-0672	2	WASHER-HARD	
	39	2	4L-6454	4	BOLT (3/8-16X1.0IN)	
	40	2	3T-4788	1	COVER	

12 FRAME AND BODY — 1 of 4 — SELP4570-01

FRAME AND BODY

8E-3299 PLATFORM GP-CAB *(contd.)* — 100090751

NOTE	REF NO	GRAPHIC REF	PART NUMBER	QTY	PART NAME 1 2 3 4 5 (PRODUCT LEVEL)	SEE PAGE
	41	2	8E-2515	1	COVER	
	42	2	7T-0134	1	PLATE	
	43	2	7T-0138	1	GASKET	
	44	2	7E-8724	1	GASKET	
	45	2	7E-8723	1	COVER	
	46	2	6V-1960	2	PLUG-BUTTON	

M-METRIC PART

SELP4570-01 — 2 of 4 — FRAME AND BODY 13

FRAME AND BODY

8E-3299 PLATFORM GP-CAB *(contd.)* — 100090751

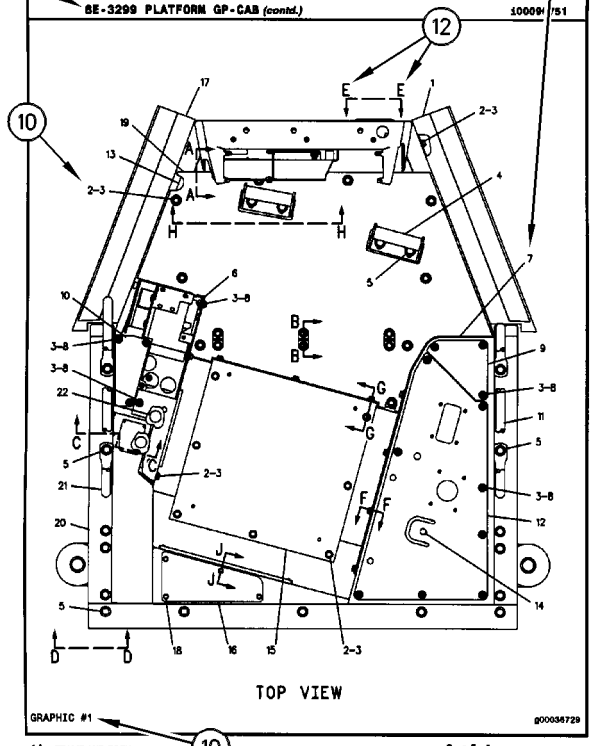

GRAPHIC #1 — g00036729

14 FRAME AND BODY — 3 of 4 — SELP4570-01

FRAME AND BODY

8E-3299 PLATFORM GP-CAB *(contd.)* — 100090751

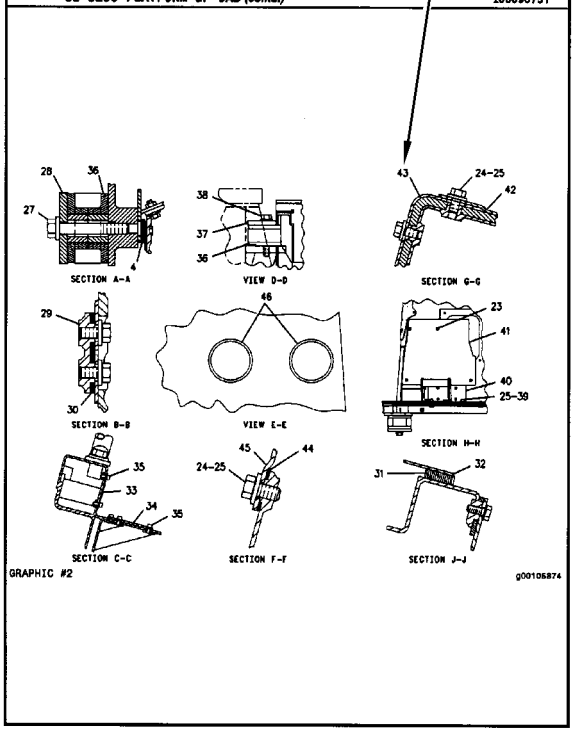

GRAPHIC #2 — g00105874

SELP4570-01 — 4 of 4 — FRAME AND BODY 16

INFORMACIÓN GENERAL

1. MÁQUINAS

Las máquinas Caterpillar se identifican con Números de Identificación del Producto (PIN). Algunos componentes incluídos en la máquina pueden estar identificados con Números de Serie (N/S). Los componentes que tienen típicamente esta identificación incluyen motores, transmisiones, hojas topadoras y desgarradores. La máquina y el motor se identifican además con Números de Configuración y en algunos casos, Números de Modificación. Estos números están en las placas de identificación del producto o en la placa principal en la cabina del operador.

Los distribuidores Caterpillar necesitan estos números para identificar con exactitud los números de piezas de repuesto.

SIS ***Nueva Característica***

A partir del primer trimestre del 2001, el Número de Identificación de Producto (PIN) de Caterpillar cambiará de 8 a 17 caracteres. Para hacer más uniforme el método de identificación de equipos, Caterpillar y otros fabricantes de equipo de construcción han tomado medidas para cumplir con la versión más reciente de la norma de numeración de identificación de productos. Los Números de Identificación de Producto para máquinas que no se operan en carreteras son definidos por la norma ISO 10261. El nuevo formato PIN corresponderá a todas las máquinas y grupos electrógenos Caterpillar. Las placas y los caracteres PIN estampados en el bastidor mostrarán el PIN de 17 caracteres. El nuevo formato tendrá la apariencia siguiente:

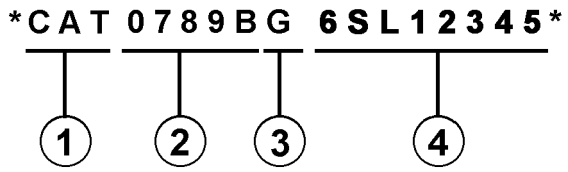

Significado de los caracteres:

1. Código de Fabricación Mundial de Caterpillar (caracteres 1-3)

2. Sección Descriptor de la Máquina (caracteres 4-8)

3. Carácter de Verificación (carácter 9)

4. Sección Indicador de la Máquina (MIS) o Número de Secuencia de Producto (caracteres 10-17). Anteriormente, estos caracteres constituían el Número de Serie.

Las máquinas y grupos electrógenos producidos antes del primer semestre del 2001 mantendrán su formato PIN de 8 caracteres.

Los componentes como motores, transmisiones, ejes, herramientas de trabajo, etc., continuarán usando un Número de Serie (S/N) de 8 caracteres.

2. COMO PEDIR REPUESTOS

⚠ ADVERTENCIA

Cuando se necesiten piezas de repuesto para este producto, Caterpillar recomienda usar piezas de repuesto Caterpillar o piezas que tengan especificaciones equivalentes incluyendo, pero sin estar limitadas a, dimensiones físicas, tipo, fortaleza y material.

El no hacer caso de esta advertencia puede llevar a fallas prematuras, daños al producto y lesiones graves o mortales.

Las piezas de repuesto Caterpillar de calidad están a la disposición de los distribuidores Caterpillar en todo el mundo. Sus existencias actualizadas incluyen todas las piezas normalmente requeridas para proteger su inversión en máquinas Caterpillar. Los distribuidores pueden tener juegos de reparación o piezas remanufacturadas para permitir la selección de la mejor alternativa de reparación en un caso en particular. Al pedir piezas de repuesto, especifique en su pedido la cantidad, el número de pieza, el nombre de la pieza y el número de serie/número de identificación del producto, de la máquina para la cual se necesitan estas piezas.

3. ORGANIZACION DEL MANUAL DE PIEZAS

La información sobre el producto, se presenta en este manual, como "elementos de información" que representan todos los componentes de un modelo específico. Las configuraciones de motores y los grupos de asientos son ejemplos de elementos de información. Los elementos de información están organizados primeramente por nombres de piezas en orden alfabético y en segundo lugar, por el número de pieza dentro de cada sección principal del manual.

4. CONTENIDO

SIS *Nueva Característica*

La página de Contenido se encuentra al principio del manual. El Contenido indica cada sección del manual con una lista completa de todos los elementos de información organizados en el orden que aparecen en el manual. Los números de página proporcionan una referencia rápida a las ilustraciones detalladas de identificación de piezas y a las listas de componentes de repuesto de dichas piezas.

5. ÍNDICE DE PIEZAS DE MANTENIMIENTO

Al principio de este catálogo se encuentra un índice de los números de piezas utilizadas más frecuentemente para el mantenimiento, que incluye descripción, cantidad necesaria, lugar de utilización y número de página. Esta información está organizada alfabéticamente, por descripción de la pieza.

6. ÍNDICE

El Índice, ubicado cerca del principio del manual, es una lista en orden alfabético de todos los elementos de información incluídos en el manual. Los números de página proporcionan una referencia rápida a las ilustraciones detalladas de identificación de piezas y a las listas de componentes de repuesto de dichas piezas.

7. INDICE NUMÉRICO DE PIEZAS

Un índice numérico de piezas con el correspondiente número de página aparece al final de este catálogo.

8. TÍTULOS

Los títulos ubicados en la parte superior de cada página de elementos de información identifican el número y el nombre de la pieza junto con información descriptiva adicional para ayudar al usuario a determinar las piezas necesarias para una máquina en particular. También se suministra información sobre las opciones de reparación en el campo, la identificación de componentes de accesorios optativos y el lugar de ubicación de la pieza ("es parte de").

SIS *Nueva Característica*

La primera línea del título se muestra con un tipo de letra más grande para indicar el comienzo de un elemento de información. Si se requieren páginas adicionales para ilustrar un elemento de información, los títulos se muestran con un tipo de letra normal y la continuación se indica entre paréntesis.

9. PIEZAS QUE NO SE SUMINISTRAN COMO REPUESTO

SIS *Nueva Característica*

En algunos casos es necesario indicar piezas que no se suministran como repuesto pero que pueden estar conectadas a listas de componentes de otras piezas de repuesto. En tal caso, dichas piezas se muestran en cursiva para indicar que no son piezas disponibles.

10. NÚMEROS DE REFERENCIA

SIS *Nueva Característica*

Los números en la columna de No. de Referencia corresponden a los números indicados en la ilustración que pertenece a ese número de pieza. Los números que tienen un sufijo alfabético identifican artículos de las listas de componentes de piezas. Los números en la columna de Referencia de la ilustración se identifican en la esquina inferior izquierda de cada ilustración. Para determinar el número de pieza correcto se puede utilizar tanto el No. de Referencia de la ilustración como el No. de Referencia del artículo. A medida que se actualiza la información para indicar los más recientes números de piezas de repuesto, puede omitirse intencionalmente un No. de Referencia en una lista de componentes de piezas.

11. NOMBRES DE PIEZA SANGRADOS

Cuando el nombre de una pieza está sangrado en una lista, significa que esta pieza forma parte del grupo o conjunto del renglón inmediatamente superior.

12. LETRAS DE REFERENCIA DE ILUSTRACIONES

Las ilustraciones contienen algunas veces letras de referencia (A, B, C etc.) cuyo propósito es seguir el trayecto de líneas y mazos de cables de un punto a otro. También se utilizan para mostrar dónde volver a unir ilustraciones que se habían separado.

13. ABREVIATURAS Y SIMBOLOS

O.D. – Diámetro exterior
I.D. – Diámetro interior
A – No es pieza de este grupo
B – Utilizado según la demanda
C – Indica cambio
D – Se pide por metro
E – Se pide por centímetro
F – No se muestra
G – Se pide por pulgada
I – Ver "Hose Fabrication Guide"
M – Pieza métrica
R – Puede estar disponible como pieza remanufacturada
Y – Ilustración separada
Z – No se suministra por separado

NOTA:

Las contínuas mejoras y adelantos en diseño podrían originar cambios a su máquina que no se incluyen en esta publicación. Cuando tenga alguna pregunta acerca de su producto Caterpillar o de esta publicación, consulte al distribuidor Caterpillar para obtener la información más reciente.

FRAME AND BODY

8E-3299 PLATFORM GP-CAB

PIN 38K1-99999

SMCS-7253 — 100090751

NOTE	REF NO	GRAPHIC REF	PART NUMBER	QTY	PART NAME 1 2 3 4 5 (PRODUCT LEVEL)	SEE PAGE
	1	1	3T-3953	1	PLATE AS	
	2	1	6B-3062	25	BOLT (3/8-16X.750IN)	
	3	1	6P-1075	41	WASHER-HARD (3MM THK)	
	4	1	9P-1444	2	SUPPORT AS-FOOT	
	5	1	9P-2229	19	BOLT (1/2-13X1IN)	
		1	6P-[illegible]	19	WASHER-HARD (4MM THK)	
	6	1	8E-8194	1	COVER AS-LH	
		1	9F-2979	5	NUT-WELD (3/8-16 THD)	
		1	1P-0199	1	CLIP	
	7	1	7E-3411	4	COVER	
	8		6J-0468	19	SCREW-HEAD (3/8-16X.875IN)	
	9	1	[illegible]474	1	COVER	
		1	8E-8972	1	GASKET	
	10	1	8E-3248	1	[illegible]	
		1	8E-2250	1	GASKET	
	11	1	3T-3939	1	HANDHOLD	
	12	1	8E-8978	1	COVER AS	
		1	9F-2979	8	NUT-WELD (3/8-16 THD)	
		1	8E-8972	1	GASKET	
	13	1	7T-0131	1	FLOORPLATE AS	
		1	1F-0749	4	NUT-WELD (1/2-13 THD)	
	14	1	7V-8087	1	PLUG-BUTTON	
	15	1	7T-0136	1	PLATE AS	
		1	9F-2979	5	NUT-WELD (3/8-16 THD)	
	16	1	7T-8066	1	COVER	
		1	7T-0779	1	GASKET	
	17	1	3T-3951	1	PLATE AS	
	18	1	6T-8364	4	BOLT (1/4-20X.625IN)	
M		1	6T-4205	4	WASHER-HARD (2MM THK)	
	19	1	6X-8464	1	FLOOR MAT	
	20	1	8E-8846	1	MODULE AS-OPERATOR	
	21	1	3T-3934	1	HANDHOLD	
	22	1	9P-8571	2	PLUG	
	23	2	6T-8364	4	BOLT (1/4-20X.625IN)	
M		2	6T-4205	4	WASHER-HARD (2MM THK)	
	24	2	6B-3062	17	BOLT (3/8-16X.750IN)	
	25	2	6P-1075	21	WASHER-HARD (3MM THK)	
	26	2	7T-0136	1	SEAL	
	27	2	7X-0378	2	BOLT (3/4-10X5IN)	
		2	7X-0682	2	WASHER-HARD (6MM THK)	
	28	2	3T-3482	2	PLATE	
	29	2	3T-8290	1	PLATE AS	
		2	7E-4528	6	SPACER	
	30	2	3T-8281	1	SEAL	
	31	2	7E-8017	1	GASKET	
	32	2	7E-8015	1	COVER AS	
		2	2E-2376	2	WASHER	
		2	6P-8020	2	SCREW-KNURLED	
	33	2	9W-3429	1	COVER	
	34	2	8E-8997	1	COVER	
	35	2	6D-3031	8	SCREW-SOCKET HEAD	
	36	2	9W-3142	8	MOUNTING	
	37	2	9W-9027	2	PLATE	
	38	2	7X-0300	2	BOLT (7/8-9X6IN)	
		2	7X-0672	2	WASHER-HARD	
	39	2	4L-6454	4	BOLT (3/8-16X1.0IN)	
	40	2	3T-4788	1	COVER	

12 FRAME AND BODY — 1 of 4 — SELP4570-01

FRAME AND BODY

8E-3299 PLATFORM GP-CAB *(contd.)* — 100090751

NOTE	REF NO	GRAPHIC REF	PART NUMBER	QTY	PART NAME 1 2 3 4 5 (PRODUCT LEVEL)	SEE PAGE
	41	2	8E-2515	1	COVER	
	42	2	7T-0134	1	PLATE	
	43	2	7T-0138	1	GASKET	
	44	2	7E-8724	1	GASKET	
	45	2	7E-8723	1	COVER	
	46	2	6V-1960	2	PLUG-BUTTON	

M-METRIC PART

SELP4570-01 — 2 of 4 — FRAME AND BODY 13

FRAME AND BODY

8E-3299 PLATFORM GP-CAB *(contd.)* — 100090751

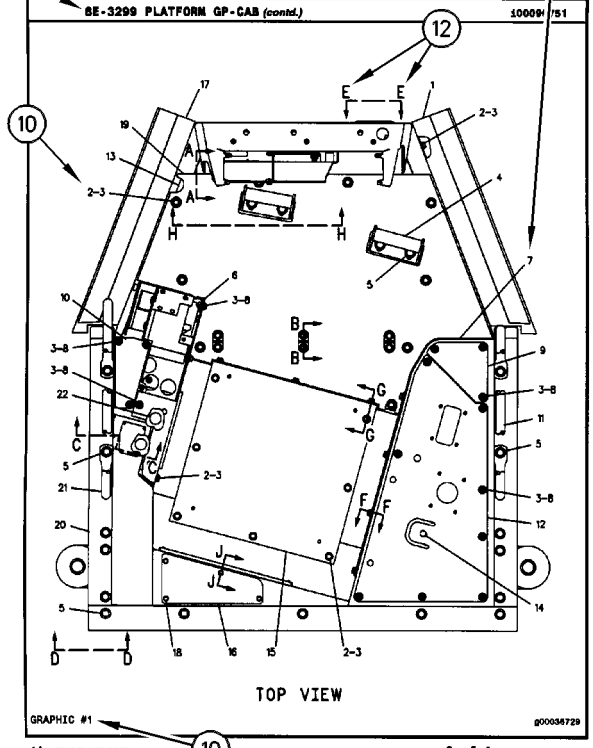

GRAPHIC #1 — g00036729

14 FRAME AND BODY — 3 of 4 — SELP4570-01

FRAME AND BODY

8E-3299 PLATFORM GP-CAB *(contd.)* — 100090751

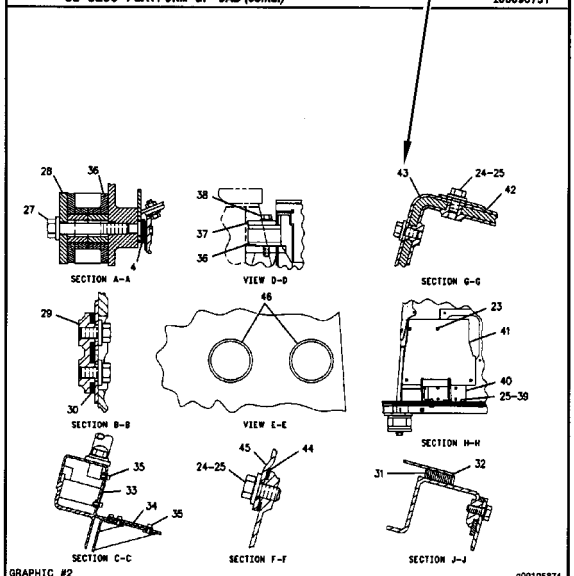

GRAPHIC #2 — g00105874

SELP4570-01 — 4 of 4 — FRAME AND BODY 15

INFORMAÇÃO GERAL

1. IDENTIFICAÇÃO DA MÁQUINA

As máquinas Caterpillar são identificadas pelos Números de Informação do Produto (PIN). Alguns componentes incluídos numa máquina podem ser identificados por Números de Série (S/N). Componentes típicos que serão enumerados com números de série incluem motores, transmissões, lâminas e ríperes. Além do número de série, a máquina e o motor são ainda identificados por números de arranjo e, em alguns casos, números de modificações. Tais números encontram-se na(s) placa(s) de identificação do produto e na placa mestre no compartimento do operador.

SIS ***Novidades***

A partir do primeiro trimestre de 2001 o Número de Identificação de Produto da Caterpillar (PIN) vai mudar de 8 para 17 caracteres. Esforçando-se para fornecer uma identificação uniforme de equipamentos, a Caterpillar e outros fabricantes de equipamento de construção estão mudando para atender a versão mais atualizada do padrão de identificação de produtos. Os números de PIN para produtos de aplicações não rodoviárias são definidos pela ISO 10261. O novo formato de número PIN será adotado em todas as máquinas e grupos geradores Caterpillar. As placas e as marcações do chassi mostrarão os 17 dígitos de PIN. O novo formato terá a seguinte disposição:

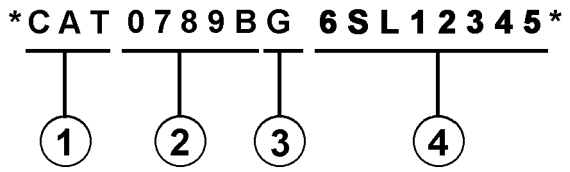

Onde:

1. Código de Fabricação Mundial da Caterpillar (dígitos 1-3)

2. Descrição da Máquina (dígitos 4-8)

3. Dígito de Verificação (dígito 9)

4. Seção de Indicador da Máquina (MIS) ou Número de Seqüência de Produto (dígitos 10-17). Estes eram anteriormente chamados de Número de Série.

Máquinas e grupos geradores produzidos antes do primeiro trimestre de 2001 manterão o formato de 8 caracteres de PIN.

Componentes como motores, transmissões, eixos, ferramentas de trabalho, etc. continuarão a usar Número de Série (S/N) com oito caracteres.

2. COMO OBTER PEÇAS

⚠ CUIDADO

Quando peças de substituição são exigidas para este produto, a Caterpillar recomenda a utilização de peças de substituição Caterpillar ou peças com as especificações equivalentes incluindo, mas não limitadas, à dimensões físicas, tipos, resistência e materiais.

A inobservância desta advertência poderá resultar em falhas prematuras, danos ao produto, ferimentos ou morte.

As Peças de Reposição de Qualidade Caterpillar encontram-se disponíveis nos revendedores Caterpillar no mundo inteiro. Seus estoques de peças são atualizados e incluem todas as peças normalmente necessárias para proteger seu investimento em máquinas Caterpillar. Alguns revendedores podem oferecer jogos de reparo ou peças de troca/remanufaturadas disponíveis como uma opção da alternativa de reparo mais eficaz para uma situação específica. Ao encomendar peças, seu pedido deve especificar a quantidade, o número e o nome da peça e o número de série/número de identificação do produto referentes à máquina para a qual as peças se destinam.

3. ORGANIZAÇÃO DO MANUAL DE PEÇAS

A informação do produto neste manual é apresentada em forma de "elementos de informação" que representam todos os componentes para o modelo específico. Arranjo de Motor e Grupo de Assento são exemplos de elementos de informação. Os elementos de informação são organizados em ordem alfabética por nome de peça ou secundariamente, por número de peça incluído em cada seção principal do manual.

4. LISTA DE CONTEÚDOS

SIS ***Novidades***

A Lista de Conteúdos (TOC) se encontra no princípio do manual. A Lista de Conteúdos (TOC) relaciona em cada seção do manual uma lista completa com todos os elementos de informação organizados conforme aparecem no manual. Números de página são fornecidos para que se tenha referência rápida de ilustrações de peças detalhadas e listas de conteúdos que podem receber serviço de manutenção.

5. ÍNDICE DE PEÇAS DE MANUTENÇÃO

O Índice de Peças de Manutenção, localizado perto do princípio do manual, faz referência aos números de peça de manutenção usados com maior frequência, fornecendo uma descrição, a quantidade, o uso e o número de página. Esta informação é organizada com a descrição da peça em ordem alfabética.

6. ÍNDICE

O Índice localizado perto do princípio do manual, consiste de uma lista em ordem alfabética de todos os elementos de informação incluídos no manual. Números de página são fornecidos para que se tenha referência rápida de ilustrações de peças detalhadas e listas de conteúdos que podem receber serviço de manutenção.

7. ÍNDICE DE NÚMERO DE PEÇA

Um índice numérico relacionando todos os números de peça e a(s) página(s) correspondentes, aparece no final do manual.

8. LEGENDAS

As legendas localizadas na parte de cima de cada página de um elemento de informação identifica o número de peça e o nome da peça, juntamente com informação descritiva adicional. Informações sobre o Número de Informação do Produto (PIN) e o Número de Série (S/N) encontradas em cada legenda devem ser usadas para selecionar a informação correta sobre uma máquina específica. Opções de substituição no campo, identificação de componentes de acessórios opcionais e informações sobre onde são utilizados ("parte de") são também fornecidas.

SIS ***Novidades***

A primeira linha de uma legenda é indicada em tipo maior para indicar o princípio de um elemento de informação. Legendas para páginas adicionais que podem ser necessárias para ilustrar um elemento de informação serão apresentadas em tipo padrão e incluirão o termo *(continua)* .

9. NÃO DISPONÍVEL SEPARADAMENTE

SIS ***Novidades***

Em alguns casos, é necessário mostrar peças não disponíveis separadamente que têm uma ligação com listas de conteúdos de nível inferior que podem receber serviço de manutenção. Os números de peça destes componentes não disponíveis aparecerão em *itálico* , a fim de indicar que não estão disponíveis.

10. NÙMEROS DE REFERÊNCIA À LISTA DE PEÇAS

SIS ***Novidades***

Os números indicados na coluna Ref No (No. de Referência) correspondem-se aos números usados no(s) gráfico(s) correspondente(s). Um sufixo com letras pode ser acrescentado a um número de referência para identificar itens de conteúdo de nível inferior. Os números indicados na coluna Graphic Ref (Referência de Gráfico) referem-se ao identificador de número de gráfico presente no canto esquerdo inferior de cada ilustração. O número de Referência de Gráfico pode ser usado em combinação com o item Ref No para determinar-se o número de peça correto. Poderá haver omissão intencional de um número de referência (Ref No) de uma lista de conteúdos uma vez que as informações são atualizadas para refletir os números de peça mais recentes que podem receber serviço de manutenção.

11. NOMES DE PEÇAS DESALINHADOS

Quando um nome de peça encontra-se desalinhado numa lista de peças, significa que tal item faz parte do (está incluído no) grupo ou conjunto sob o qual está relacionado.

12. LETRAS DE REFERÊNCIA NAS ILUSTRAÇÕES

Quando necessário, as ilustrações contêm letras de referência (A, B, C, etc.) que são utilizadas para seguir tubulações e cabos elétricos de um ponto a outro. Também foram utilizadas para indicar onde se pode reconectar as ilustrações que foram separadas.

13. ABREVIAÇÕES E SÍMBOLOS

O.D. – "Outside Diameter" (Diâmetro Externo)
I.D. – "Inside Diameter" (Diâmetro Interno)
A – Não faz parte deste grupo
B – Use conforme necessário
C – Indica modificação
D – Vendido por metro
E – Vendido por centímetro
F – Não ilustrado
G – Vendido por polegada
I – Consulte o seu revendedor quanto a mangueira
M – Peça métrica
R – Peça remanufaturada pode estar disponível; consulte o seu revendedor Cat
Y – Ilustração separada
Z – Não disponível separadamente

NOTA:

Os contínuos aperfeiçoamentos e avanços no projeto do produto podem ocasionar modificações em sua máquina que talvez ainda não estejam incluídas nesta publicação. Sempre que surgirem dúvidas quanto a um produto Caterpillar ou quanto à presente publicação, consulte o seu revendedor Caterpillar para obter as informações mais recentes disponíveis.

FRAME AND BODY

8E-3299 PLATFORM GP-CAB

PIN 38K1-99999

SMCS-7253 — 100090751

NOTE	REF NO	GRAPHIC REF	PART NUMBER	QTY	PART NAME 1 2 3 4 5 (PRODUCT LEVEL)	SEE PAGE
	1	1	3T-3953	1	PLATE AS	
	2	1	6B-3062	25	BOLT (3/8-16X.750IN)	
	3	1	6P-1075	41	WASHER-HARD (3MM THK)	
	4	1	9P-1444	2	SUPPORT AS-FOOT	
	5	1	9P-2229	19	BOLT (1/2-13X1IN)	
		1	6P-[illegible]	19	WASHER-HARD (4MM THK)	
	6	1	8E-8194	1	COVER AS-LH	
		1	9F-2979	5	NUT-WELD (3/8-16 THD)	
		1	1P-8199	1	CLIP	
	7	1	7E-3411	4	COVER	
	8		6J-0468	19	SCREW-HEAD (3/8-16X.875IN)	
	9	1	[illegible]474	1	COVER	
		1	8E-8972	1	GASKET	
	10	1	8E-3248	1	[illegible]	
		1	8E-2250	1	GASKET	
	11	1	3T-3935	1	HANDHOLD	
	12	1	8E-8976	1	COVER AS	
		1	9F-2979	8	NUT-WELD (3/8-16 THD)	
		1	8E-8978	1	GASKET	
	13	1	7T-0131	1	FLOORPLATE AS	
		1	1F-0748	4	NUT-WELD (1/2-13 THD)	
	14	1	7V-8087	1	PLUG-BUTTON	
	15	1	7T-0136	1	PLATE AS	
		1	9F-2979	5	NUT-WELD (3/8-16 THD)	
	16	1	7T-8066	1	COVER	
		1	7T-0779	1	GASKET	
	17	1	3T-3951	1	PLATE AS	
	18	1	6T-8364	4	BOLT (1/4-20X.625IN)	
M		1	6T-4205	4	WASHER-HARD (2MM THK)	
	19	1	6X-8464	1	FLOOR MAT	
	20	1	8E-8846	1	MODULE AS-OPERATOR	
	21	1	3T-3934	1	HANDHOLD	
	22	1	9P-8571	2	PLUG	
	23	2	6T-8364	4	BOLT (1/4-20X.625IN)	
M		2	6T-4205	4	WASHER-HARD (2MM THK)	
	24	2	6B-3062	17	BOLT (3/8-16X.750IN)	
	25	2	6P-1075	21	WASHER-HARD (3MM THK)	
	26	2	7T-0136	1	SEAL	
	27	2	7X-0378	2	BOLT (3/4-10X5IN)	
		2	7X-0682	2	WASHER-HARD (6MM THK)	
	28	2	3T-3482	2	PLATE	
	29	2	3T-8290	1	PLATE AS	
		2	7E-4528	6	SPACER	
	30	2	3T-8281	1	SEAL	
	31	2	7E-8817	1	GASKET	
	32	2	7E-8916	1	COVER AS	
		2	2E-2376	2	WASHER	
		2	6P-8026	2	SCREW-KNURLED	
	33	2	9W-3429	1	COVER	
	34	2	8E-8897	1	COVER	
	35	2	6D-3031	8	SCREW-SOCKET HEAD	
	36	2	9W-3142	8	MOUNTING	
	37	2	9W-9027	2	PLATE	
	38	2	7X-0360	2	BOLT (7/8-9X6IN)	
		2	7X-0672	2	WASHER-HARD	
	39	2	4L-6454	4	BOLT (3/8-16X1.0IN)	
	40	2	3T-4788	1	COVER	

12 FRAME AND BODY — 1 of 4 — SELP4570-01

FRAME AND BODY

8E-3299 PLATFORM GP-CAB *(contd.)* — 100090751

NOTE	REF NO	GRAPHIC REF	PART NUMBER	QTY	PART NAME 1 2 3 4 5 (PRODUCT LEVEL)	SEE PAGE
	41	2	8E-2515	1	COVER	
	42	2	7T-0134	1	PLATE	
	43	2	7T-0138	1	GASKET	
	44	2	7E-8724	1	GASKET	
	45	2	7E-8723	1	COVER	
	46	[illegible]	6V-1960	2	PLUG-BUTTON	

M-METRIC PART

SELP4570-01 — 2 of 4 — FRAME AND BODY 13

FRAME AND BODY

8E-3299 PLATFORM GP-CAB *(contd.)* — 100090751

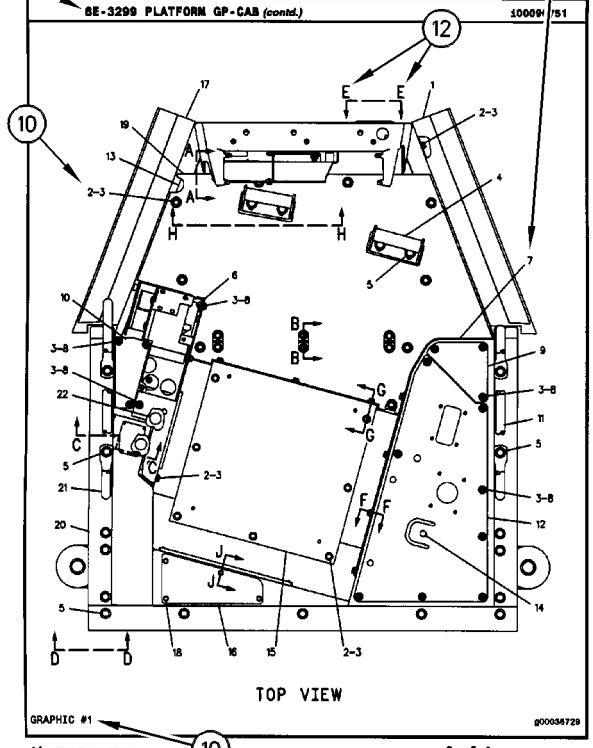

GRAPHIC #1 — g00036729

14 FRAME AND BODY — 3 of 4 — SELP4570-01

FRAME AND BODY

8E-3299 PLATFORM GP-CAB *(contd.)* — 100090751

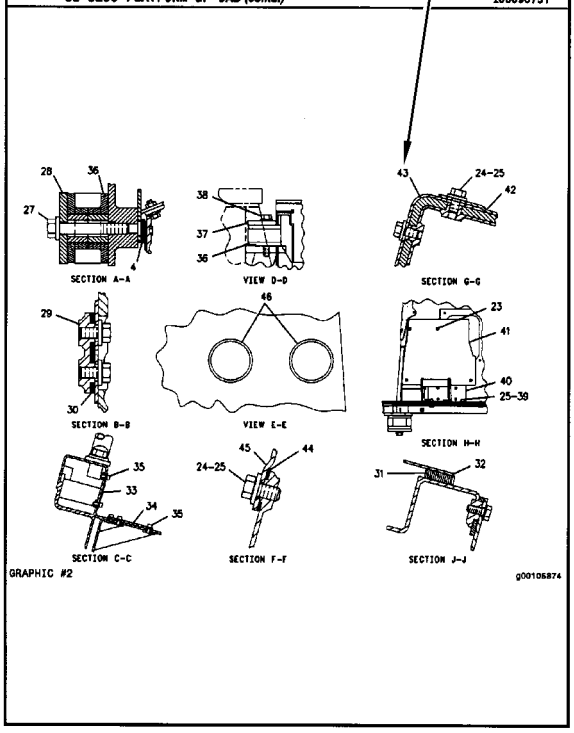

GRAPHIC #2 — g00105874

SELP4570-01 — 4 of 4 — FRAME AND BODY 16

ALLGEMEINE HINWEISE

1. MASCHINENKENNZEICHNUNG

Caterpillar-Maschinen sind mit PRODUCT IDENTIFICATION NUMBERS (PIN) (Produkt-Identnummern) gekennzeichnet. Einige Baugruppen, z.B. Motoren, Getriebe, Planierschilde und Aufreißer, sind mit SERIAL NUMBERS (S/N) (Seriennummern) gekennzeichnet. An der Maschine und am Motor befinden sich außerdem ARRANGEMENT NUMBERS (Ausrüstungsnummern) sowie in einigen Fällen MODIFICATION NUMBERS (Änderungsnummern). Sie befinden sich auf den PIN-Schildern und auf dem Typenschild im Fahrerhaus.

Bei Ersatzteilbestellungen müssen dem Händler alle diese Nummern zur Verfügung gestellt werden.

SIS ***Neu im Parts Manual***

Vom ersten Quartal 2001 ab wird die Caterpillar Produkt-Identnummer (PIN) von 8 auf 17 Zeichen geändert. Um zur Standardisierung der Produkt-Identnummer beizutragen, sind Caterpillar und andere Baumaschinenhersteller bestrebt, die aktuellste Norm zur Produkt-Identnummerierung einzuführen. Produkt-Identnummern für Baumaschinen sind durch ISO 10261 definiert. Das neue Format der Produkt-Identnummern gilt für alle Caterpillar-Maschinen und -Stromaggregate. Die Produkt-Identschilder und -Identrahmenmarkierung enthalten die aus 17 Zeichen bestehende Identnummer. Das neue Format hat folgende Abschnitte:

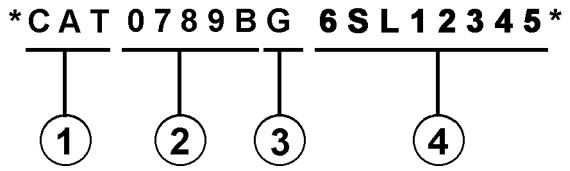

Abschnitte:

1. Caterpillars weltweiter Herstellungscode (Zeichen 1-3)

2. Modell (Zeichen 4-8)

3. Kontrollzeichen (Zeichen 9)

4. Maschinenspezifische Kennung (MIS) oder Produktsequenznummer (Zeichen 10-17). Diese wurde früher als Seriennummer bezeichnet.

Für vor dem ersten Quartal 2001 hergestellte Maschinen und Stromaggregate wird das aus 8 Zeichen bestehende PIN-Format beibehalten.

Bauteile wie z.B. Motoren, Getriebe, Achsen sowie Arbeitsgeräte werden weiterhin eine aus 8 Zeichen bestehende Seriennummer (S/N) aufweisen.

2. BESTELLEN VON ERSATZTEILEN

⚠ WARNUNG

Wenn für diese Maschine Ersatzteile benötigt werden, empfiehlt Caterpillar, ausschließlich Caterpillar-Ersatzteile oder solche zu verwenden, die die gleichen technischen Merkmale hinsichtlich Typ, Festigkeit, Werkzeugeigenschaften und die gleichen Maße aufweisen.

Bei Nichtbeachtung dieser Warnung besteht Verletzungs- oder sogar Lebensgefahr! Ferner kann Nichtbeachtung vorzeitige Ausfälle der Teile und Beschädigung der Maschine zur Folge haben.

Original Caterpillar-Ersatzteile können weltweit bei jedem Caterpillar-Händlern bestellt werden. Die umfangreichen Händlerlager enthalten normalerweise alle Teile, die Sie für Ihre Caterpillar-Maschine benötigen. Einige Händler bieten Reparatursätze, Austausch- oder werküberholte Teile an, so daß Sie eine Auswahl unter verschiedenen Reparaturmöglichkeiten treffen können. Ihre Bestellung muß folgende Angaben enthalten: Anzahl der benötigten Teile, Bestellnummer, Bezeichnung des Teils, Serien-Nr./Produkt-Ident-Nr., Ausrüstungs-Nr. und Änderungs-Nr. der Maschine, für die diese Teile benötigt werden.

3. AUFBAU DES PARTS MANUAL

Die Produktinformationen für alle Komponenten eines bestimmten Modells sind in INFORMATION ELEMENTS (Informationseinheiten) gegliedert. ENGINE ARRANGEMENT (Motorausführung) und SEAT GROUP (Fahrersitz) sind Beispiele für solche Informationseinheiten. Sie sind innerhalb jeder Gruppe alphabetisch, entsprechend der Ersatzteilbezeichnung, und zusätzlich numerisch, entsprechend der Ersatzteilnummer, geordnet.

4. INHALTSVERZEICHNIS

SIS *Neu im Parts Manual*

Das Inhaltsverzeichnis befindet sich am Anfang des Buches. Im Inhaltsverzeichnis werden die einzelnen Abschnitte des Buches aufgeführt. Die Abschnitte enthalten eine vollständige Aufstellung aller Informationseinheiten. Diese sind entsprechend ihrem Erscheinen im Buch geordnet. Das Inhaltsverzeichnis enthält Seitenangaben für Schnellverweise auf detaillierte Abbildungen und Teillisten.

5. INDEX FÜR WARTUNGSTEILE

Der Index für Wartungsteile vorn im Buch enthält die Bestellnummern, Seitenangaben, Mengenangaben und Informationen über den Einsatzbereich für die am häufigsten benötigten Ersatzteile. Die Angaben sind alphabetisch entsprechend der Teilebezeichnung geordnet.

6. INDEX

Der Index vorn im Buch enthält eine alphabetische Liste aller Informationseinheiten. Er enthält Seitenangaben für Schnellverweise auf detaillierte Abbildungen und Teillisten.

7. INDEX FÜR BESTELLNUMMERN

Hinten im Buch befindet sich ein numerischer Index, mit allen Bestellnummern und dem Hinweis auf die Seite, auf der sich die betreffende Abbildung befindet.

8. ÜBERSCHRIFTEN

Die Überschriften, die sich oben auf den Seiten der Informationseinheiten befinden, enthalten Bestellnummern, Ersatzteilbezeichnungen und zusätzliche beschreibende Informationen. Produkt-Ident- und Seriennummern in den Überschriften sollten zur Auswahl der richtigen Informationen für die betreffende Maschine verwendet werden. Die Überschriften enthalten außerdem Informationen über möglichen Außendienstersatz, mögliche Baugerätekomponenten und die Baugruppe, zu der das Teil gehört.

SIS *Neu im Parts Manual*

Die erste Zeile einer Überschrift erscheint in einer größeren Schriftart, um den Anfang einer Informationseinheit zu kennzeichnen. Überschriften für zusätzliche Seiten, die zur Erläuterung einer Informationseinheit notwendig sind, erscheinen in normaler Schriftart und enthalten den Begriff "(contd.)".

9. NICHT EINZELN LIEFERBARE TEILE

SIS *Neu im Parts Manual*

In einigen Fällen ist es notwendig nicht lieferbare Teile, die selbst mit einer eigenen Teilliste im Buch vertreten sind, aufzuführen. Die Bestellnummern dieser nicht einzeln lieferbaren Teile erscheinen kursiv, wodurch angezeigt wird, daß sie nur in Verbindung mit anderen Teilen lieferbar sind.

10. REFERENZNUMMER FÜR ERSATZTEILE

SIS *Neu im Parts Manual*

Die Zahlen, die in der Spalte "Ref No" aufgeführt sind, stimmen mit den Zahlen in den beigefügten Abbildungen überein. Ein Buchstaben-Suffix kann zu einer Referenznummer hinzugefügt werden, um zu kennzeichnen, daß das Teil mit einer eigenen Teilliste im Buch aufgeführt ist. Die in der Spalte "Graphic Ref" angeführten Zahlen verweisen auf die Identifikationsnummer der Abbildung, die sich in der linken unteren Ecke der Abbildung befindet. Diese Nummer kann zusammen mit der Referenznummer des Teils angegeben werden, um die richtige Ersatzteilnummer zu ermitteln. Referenznummern können absichtlich weggelassen werden, da die Nummern der lieferbaren Ersatzteile ständig aktualisiert werden.

11. EINGERÜCKTE BEZEICHNUNGEN

Wenn eine Bezeichnung eingerückt ist, wird dadurch angezeigt, daß das Teil zu einer Baugruppe gehört, unter deren Bezeichnung es eingerückt ist.

12. REFERENZBUCHSTABEN

Falls erforderlich sind in den Abbildungen Referenzbuchstaben enthalten (z.B. A, B, C, usw.), die Leitungen und Kabelbäume von einem Punkt zum anderen verfolgen. Außerdem geben sie die Stelle an, an der getrennte Abbildungen fortgesetzt werden.

13. ABKÜRZUNGEN UND SYMBOLE

O.D. – Außendurchmesser
I.D. – Innendurchmesser
A – kein Teil dieser Gruppe
B – nach Bedarf verwenden
C – Hinweis auf eine Änderung
D – in Meter-Länge bestellen
E – in Zentimeter-Länge bestellen
F – nicht gezeigt
G – in Zoll-Länge bestellen
I – siehe "Hose Fabrication Guide"
M – metrisches Teil
R – werküberholtes Teil unter Umständen lieferbar
Y – separate Abbildung
Z – nicht einzeln lieferbar

ANMERKUNG:

Ständig vorgenommene Verbesserungen und Weiterentwicklungen an Ihrer Maschine können Änderungen verursachen, die in der vorliegenden Ausgabe noch nicht berücksichtigt sind. Fragen zu Ihrer Caterpillar-Maschine oder diesem Ersatzteilbuch beantwortet Ihr Caterpillar-Händler.

FRAME AND BODY

8E-3299 PLATFORM GP-CAB

PIN 38K1-99999

SMCS-7253 — 100090751

NOTE	REF NO	GRAPHIC REF	PART NUMBER	QTY	PART NAME 1 2 3 4 5 6 (PRODUCT LEVEL)	SEE PAGE
	1	1	3T-3953	1	PLATE AS	
	2	1	6B-3062	25	BOLT (3/8-16X.750IN)	
	3	1	6P-1075	41	WASHER-HARD (3MM THK)	
	4	1	9F-1444	2	SUPPORT AS-FOOT	
	5	1	9P-2229	19	BOLT (1/2-13X1IN)	
		1	6P-[illegible]	19	WASHER-HARD (4MM THK)	
	6	1	8E-8194	1	COVER AS-LH	
		1	9F-2979	5	NUT-WELD (3/8-16 THD)	
		1	1P-8199	1	CLIP	
	7	1	7E-3411	4	COVER	
	8		6J-0468	19	SCREW-HEAD (3/8-16X.875IN)	
	9	1	[illegible]474	1	COVER	
		1	8E-5972	1	GASKET	
	10	1	8E-3248	1	[illegible]	
		1	8E-2250	1	GASKET	
	11	1	3T-3939	1	HANDHOLD	
	12	1	8E-8976	1	COVER AS	
		1	9F-2979	8	NUT-WELD (3/8-16 THD)	
		1	8E-5972	1	GASKET	
	13	1	7T-0131	1	FLOORPLATE AS	
		1	1F-0749	4	NUT-WELD (1/2-13 THD)	
	14	1	7V-8087	1	PLUG-BUTTON	
	15	1	7T-0136	1	PLATE AS	
		1	9F-2979	5	NUT-WELD (3/8-16 THD)	
	16	1	7T-5066	1	COVER	
		1	7T-0779	1	GASKET	
	17	1	3T-3951	1	PLATE AS	
	18	1	6T-8364	4	BOLT (1/4-20X.625IN)	
M		1	6T-4205	4	WASHER-HARD (2MM THK)	
	19	1	6X-0464	1	FLOOR MAT	
	20	1	8E-5846	1	MODULE AS-OPERATOR	
	21	1	3T-3934	1	HANDHOLD	
	22	1	9P-8571	2	PLUG	
	23	2	6T-8364	4	BOLT (1/4-20X.625IN)	
M		2	6T-4205	4	WASHER-HARD (2MM THK)	
	24	2	6B-3062	17	BOLT (3/8-16X.750IN)	
	25	2	6P-1075	21	WASHER-HARD (3MM THK)	
	26	2	7T-0136	1	SEAL	
	27	2	7X-0378	2	BOLT (3/4-10X5IN)	
		2	7X-0682	2	WASHER-HARD (6MM THK)	
	28	2	3T-3482	2	PLATE	
	29	2	3T-5290	1	PLATE AS	
		2	7E-4528	6	SPACER	
	30	2	3T-5261	1	SEAL	
	31	2	7E-8017	1	GASKET	
	32	2	7E-8015	1	COVER AS	
		2	2E-2376	2	WASHER	
		2	6P-8026	2	SCREW-KNURLED	
	33	2	9W-3429	1	COVER	
	34	2	8E-8097	1	COVER	
	35	2	6D-3031	8	SCREW-SOCKET HEAD	
	36	2	9W-3142	8	MOUNTING	
	37	2	9W-9027	2	PLATE	
	38	2	7X-0300	2	BOLT (7/8-9X6IN)	
		2	7X-0672	2	WASHER-HARD	
	39	2	4L-6454	4	BOLT (3/8-16X1.0IN)	
	40	2	3T-4788	1	COVER	

12 FRAME AND BODY — 1 of 4 — SELP4570-01

FRAME AND BODY

8E-3299 PLATFORM GP-CAB *(contd.)* — 100090751

NOTE	REF NO	GRAPHIC REF	PART NUMBER	QTY	PART NAME 1 2 3 4 5 6 (PRODUCT LEVEL)	SEE PAGE
	41	2	8E-2515	1	COVER	
	42	2	7T-0134	1	PLATE	
	43	2	7T-0138	1	GASKET	
	44	2	7E-8724	1	GASKET	
	45	2	7E-8723	1	COVER	
	46	2	6V-1969	2	PLUG-BUTTON	

M-METRIC PART

SELP4570-01 — 2 of 4 — FRAME AND BODY 13

FRAME AND BODY

8E-3299 PLATFORM GP-CAB *(contd.)* — 100090751

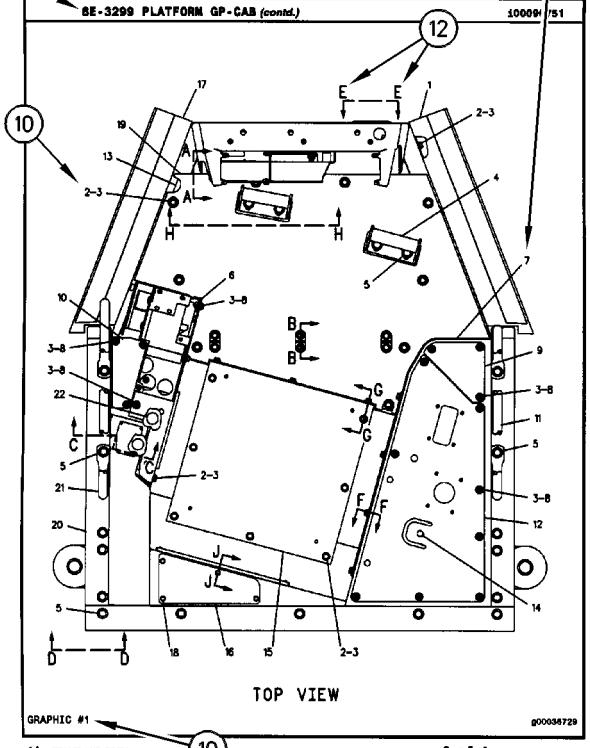

GRAPHIC #1 — g00036729

14 FRAME AND BODY — 3 of 4 — SELP4570-01

FRAME AND BODY

8E-3299 PLATFORM GP-CAB *(contd.)* — 100090751

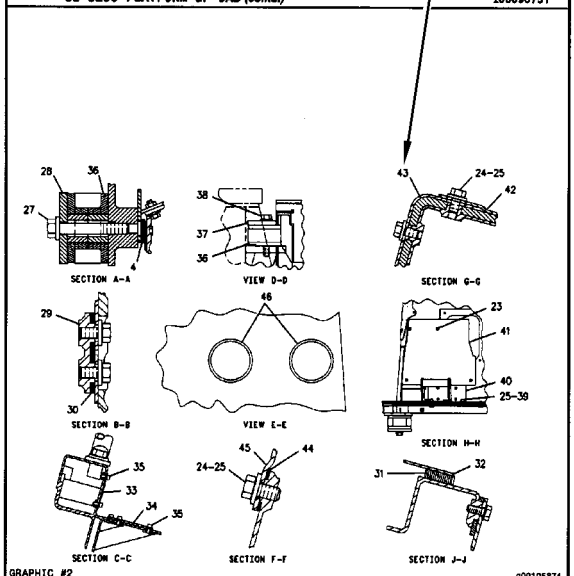

GRAPHIC #2 — g00105874

SELP4570-01 — 4 of 4 — FRAME AND BODY 15

REMANUFACTURED COMPONENTS

As an option when making repairs consider Caterpillar Remanufactured Components. Components that are available through the Caterpillar Remanufactured Program are identified three ways in the parts book:

- with the letter R in the note field of the parts list
- with an R* at the beginning of the first line of the caption
- with an *R at the end of the first line of the caption

Typical components included in the Remanufacturing Program include:

ALTERNATORS
CONNECTING RODS
CRANKSHAFTS - UNDERSIZE
CRANKSHAFTS - UPGRADE TO NEW
CYLINDER HEADS
ELECTRONIC CONTROL MODULES (ECM)
ELECTRONIC SENSORS
FUEL INJECTORS
FUEL NOZZLES
FUEL PUMPS
GOVERNORS
OIL PUMPS
PISTONS
SHORT BLOCKS
STARTERS
TURBOCHARGERS - COMPLETE
TURBOCHARGER CARTRIDGES
WATER PUMPS

Caterpillar Remanufactured engines for many engine arrangements are also available.

COMPOSANTS RÉNOVÉS

Comme option de réparation, considérer les composants rénovés Caterpillar. Les composants disponibles dans le cadre du programme Caterpillar de composants rénovés sont identifiés de trois façons dans le catalogue de pièces:

- avec la lettre "R" dans l'espace note de la liste des pièces
- avec R* au début de la première ligne des légendes
- avec *R à la fin de la première ligne des légendes

Les composants suivants figurent parmi les composants typiques du programme de rénovation:

ALTERNATEURS
BIELLES
VILEBREQUINS - SOUS-DIMENSIONNÉS
VILEBREQUINS - REMIS À NEUF
CULASSES
MODULES DE COMMANDE ÉLECTRONIQUE (ECM)
CAPTEURS ÉLECTRONIQUES
INJECTEURS
TÊTES D'INJECTEURS
POMPES À CARBURANT
RÉGULATEURS
POMPES À HUILE
PISTONS
BLOCS EMBIELLÉS
DÉMARREURS
TURBOCOMPRESSEURS - COMPLETS
CARTOUCHES DE TURBOCOMPRESSEUR
POMPES À EAU

Des moteurs rénovés sont aussi disponibles pour plusieurs versions de moteur.

COMPONENTES REMANUFACTURADOS

Al hacer reparaciones, tenga en cuenta la opción de Componentes Remanufacturados Caterpillar. Los componentes que están disponibles por medio del programa de Productos Remanufacturados Caterpillar se identifican de tres maneras en el manual de piezas:

- con la letra R en el espacio de Nota de la lista de piezas
- con una R* al comienzo de la primera línea de la leyenda
- con una *R al final de la primera línea de la leyenda

Los componentes que se incluyen típicamente en el Programa de Productos Remanufacturados son:

ALTERNADORES
BIELAS
CIGÜEÑALES - BAJOMEDIDA
CIGÜEÑALES - REMANUFACTURADOS A NUEVO
CULATAS
MÓDULOS DE CONTROL ELECTRÓNICO (ECM)
SENSORES ELECTRONICOS
INYECTORES
BOQUILLAS
BOMBAS DE COMBUSTIBLE
REGULADORES
BOMBAS DE ACEITE
PISTONES
MONOBLOQUES
MOTORES DE ARRANQUE
TURBOCOMPRESORES - COMPLETOS
NÚCLEOS DE TURBOCOMPRESOR
BOMBAS DE AGUA

También hay disponibles motores Remanufacturados Caterpillar para muchas de las configuraciones de motores.

COMPONENTES REMANUFATURADOS

Considere o uso de Componentes Remanufaturados Caterpillar ao efetuar reparos. Os componentes disponíveis através do Programa de Remanufatura Caterpillar são identificados de três formas no manual de peças:

- com um R na área da nota da lista de peças
- com um R* no princípio da primeira linha da legenda
- com um *R no final da primeira linha da legenda

Os componentes típicos que constam no Programa de Remanufatura incluem:

ALTERNADORES
BIELAS
VIRABREQUINS - SUBMEDIDAS
VIRABREQUINS - ATUALIZAÇÃO
CABEÇOTES
MÓDULOS DE CONTROLE ELETRÔNICO (ECM)
SENSORES ELETRÔNICOS
INJETORES DE COMBUSTÍVEL
BICOS DE ABASTECIMENTO DE COMBUSTÍVEL
BOMBAS DE COMBUSTÍVEL
GOVERNADORES
BOMBAS DE ÓLEO
PISTÕES
BLOCOS BÁSICOS DO MOTOR
MOTORES DE PARTIDA
TURBOALIMENTADORES - COMPLETOS
CARTUCHOS DE TURBOALIMENTADORES
BOMBAS D'ÁGUA

Motores Remanufaturados Caterpillar também encontram-se disponíveis para diversos arranjos de motor.

WERKÜBERHOLTE AT-PRODUKTE

Bei Reparaturen sollten werküberholte AT-Produkte von Caterpillar in Betracht gezogen werden. Die durch das AT-Programm von Caterpillar erhältlichen Teile sind im Parts Book auf drei verschiedene Arten gekennzeichnet:

- mit dem Buchstaben R in der Spalte NOTE der Ersatzteilliste
- mit einem R* am Anfang der ersten Zeile der Überschrift
- mit einem *R am Ende der ersten Zeile der Überschrift

Das AT-Programm umfaßt u.a. folgende Produkte:

DREHSTROMGENERATOREN
PLEUELSTANGEN
KURBELWELLEN - MIT UNTERMASS
KURBELWELLEN - MIT ORIGINALMASS
ZYLINDERKÖPFE
ELEKTRONISCHE STEUEREINHEITEN (EMC)
ELEKTRONISCHE SENSOREN
PUMPENDÜSEN
EINSPRITZDÜSEN
KRAFTSTOFFPUMPEN
DREHZAHLREGLER
ÖLPUMPEN
KOLBEN
TEILMOTOREN
ANLASSER
TURBOLADER - KOMPLETT
TURBOLADERLAUFZEUGE
KÜHLWASSERPUMPEN

Viele Motoren können durch werküberholte AT-Motoren von Caterpillar ersetzt werden.

SUPPLEMENTAL COOLANT ADDITIVES

CUSTOMER BENEFITS:

Protects against cavitation, foam, erosion, corrosion, and scale buildup in cooling systems.

- Provides measured coolant conditioner.

DESCRIPTION:

Additives deplete from the coolant with normal operation. For this reason, Supplemental Coolant Additives (SCA) must be added to all heavy duty coolants at regular intervals. In addition, when not using a fully formulated, pre-charged antifreeze, like Caterpillar's DEAC, an initial charge of SCA must be added to the cooling system. The amount of SCA added to the system is dependent on the capacity of the system.

The SCA for initial fill is provided as a liquid. SCA's for maintenance intervals are available in liquid form and as a spin-on element. (No Spin-on available for 3600 Family of Engines)

NOTE:

The amount of SCA added at initial fill is not the same as the amount added at maintenance intervals.

The coolant additive elements can be used with any ethylene or propylene glycol type antifreeze which meets ASTM D4985 or ASTM D5345 Specifications.

NOTE:

For use with standard heavy duty coolant only, not for use with Extended Life Coolant.

PARTS NEEDED:

Cooling System Capacity		Liquid SCA at Initial Fill	Liquid SCA at Maintenance*	Spin-on SCA Maintenance Element*
Liters	Gallons			
22-30	(6-8)	3P-2044 (1)	6V-3542 (1)	111-2370 (1)
30-38	(8-10)	3P-2044 (1) 6V-3542 (1)	111-2372 (1)	111-2369 (1)
38-49	(10-13)	3P-2044 (1) 8T-1589 (1)	111-2372 (1)	111-2369 (1)
49-64	(13-17)	3P-2044 (2)	8T-1589 (1)	9N-3368 (1)
64-83	(17-22)	3P-2044 (2) 8T-1589 (1)	111-2372 (1) 6V-3542 (1)	111-2371 (1)
83-114	(22-30)	3P-2044 (3) 8T-1589 (1)	3P-2044 (1)	9N-3718 (1)
114-163	(30-43)	3P-2044 (5)	3P-2044 (1) 6V-3542 (1)	111-2371 (2)
163-242	(43-64)	3P-2044 (8)	3P-2044 (2)	9N-3718 (2)

** Normal maintenance period is 250 hrs. See your Operation and Maintenance Manual for complete coolant maintenance instructions.*

( ) Indicates quantity required.

ADDITIFS POUR LIQUIDE DE REFROIDISSEMENT

AVANTAGES POUR LE CLIENT

L'additif protège contre la cavitation, la mousse, l'érosion, la corrosion et l'accumulation de dépôts dans le circuit de refroidissement.

- L'additif complémentaire fournit une quantité mesurée d'additif.

DESCRIPTION:

Les additifs s'épuisent pendant l'utilisation du moteur. C'est pourquoi l'on doit ajouter de l'additif au liquide de refroidissement/antigel pour moteurs diesel à intervalles réguliers. En plus, si l'on n'utilise pas de l'antigel entièrement formulé et pré-chargé comme le liquide de refroidissement/antigel Caterpillar pour moteurs diesel, une quantité initiale d'additif doit être ajoutée au circuit de refroidissement. La quantité d'additif à ajouter au circuit dépend de la contenance du circuit.

L'additif pour le remplissage initial est fourni sous forme liquide. L'additif pour l'entretien ultérieur est disponible sous forme liquide et sous forme d'élément à visser. (Il n'y a pas d'élément à visser pour les moteurs de la famille 3600).

NOTA:

La quantité d'additif à ajouter au remplissage initial diffère de la quantité à ajouter aux intervalles d'entretien.

Les éléments d'additif peuvent être utilisés avec tout antigel de type éthylène ou propylène-glycol conforme à la norme ASTM D4985 ou ASTM D5345.

NOTA:

A utiliser uniquement avec du liquide de refroidissement pour moteurs diesel et non avec le liquide de refroidissement longue durée.

PIÈCES NÉCESSAIRES:

Contenance du circuit de refroidissement		Additif liquide au remplissage initial	Additif liquide aux intervalles d'entretien*	Elément d'additif à visser aux intervalles d'entretien*
Litres	Gallons U.S.			
22-30	(6-8)	3P-2044 (1)	6V-3542 (1)	111-2370 (1)
30-38	(8-10)	3P-2044 (1) 6V-3542 (1)	111-2372 (1)	111-2369 (1)
38-49	(10-13)	3P-2044 (1) 8T-1589 (1)	111-2372 (1)	111-2369 (1)
49-64	(13-17)	3P-2044 (2)	8T-1589 (1)	9N-3368 (1)
64-83	(17-22)	3P-2044 (2) 8T-1589 (1)	111-2372 (1) 6V-3542 (1)	111-2371 (1)
83-114	(22-30)	3P-2044 (3) 8T-1589 (1)	3P-2044 (1)	9N-3718 (1)
114-163	(30-43)	3P-2044 (5)	3P-2044 (1) 6V-3542 (1)	111-2371 (2)
163-242	(43-64)	3P-2044 (8)	3P-2044 (2)	9N-3718 (2)

** L'intervalle d'entretien normal est de 250 heures-service. Voir le Guide d'utilisation et d'entretien pour de plus amples renseignements concernant l'entretien du circuit de refroidissement.*

( ) Indique la quantité exigée.

ADITIVOS DE REFRIGERANTE SUPLEMENTARIOS

VENTAJAS PARA EL USUARIO:

Protegen contra la cavitación, la formación de espuma, la corrosión y la acumulación de escamas en los sistemas de enfriamiento.

- Suministra un acondicionador dosificado de refrigerante.

DESCRIPCIÓN:

Los aditivos en el refrigerante se agotan con la operación normal. Por esta razón, se debe agregar Aditivo de refrigerante suplementario (SCA) a todos los refrigerantes para servicio pesado, a intervalos regulares. Además, cuando no se usa un anticongelante de precarga completo, tal como el DEAC de Caterpillar, es necesario agregar una cantidad de aditivo de refrigerante suplementario inicial al sistema de enfriamiento. La cantidad de aditivo que se debe agregar depende de la capacidad del sistema.

El SCA de llenado inicial es líquido. El que se usa para el mantenimiento está disponible tanto en líquido como en un elemento enroscable. (No hay elemento enroscable disponible para la Familia de Motores 3600).

NOTA:

La cantidad de aditivo de llenado inicial no es la misma que se agrega en los intervalos de mantenimiento.

Los elementos de aditivo de refrigerante se pueden usar con cualquier anticongelante de tipo glicol etilénico o propílico que esté de acuerdo con las especificaciones de las normas ASTM D4985 o ASTM D5345.

NOTA:

Se debe utilizar únicamente con refrigerante estándar para servicio pesado; no se debe usar con Refrigerante de Larga Duración.

PIEZAS NECESARIAS:

Capacidad del Sistema de Enfriamiento		SCA líquido de llenado inicial	SCA líquido de mantenimiento*	Elemento de mantenimiento enroscable*
litros	gal EE.UU.			
22-30	6-8	3P-2044 (1)	6V-3542 (1)	111-2370 (1)
30-38	8-10	3P-2044 (1) 6V-3542 (1)	111-2372 (1)	111-2369 (1)
38-49	10-13	3P-2044 (1) 8T-1589 (1)	111-2372 (1)	111-2369 (1)
49-64	13-17	3P-2044 (2)	8T-1589 (1)	9N-3368 (1)
64-83	17-22	3P-2044 (2) 8T-1589 (1)	111-2372 (1) 6V-3542 (1)	111-2371 (1)
83-114	22-30	3P-2044 (3) 8T-1589 (1)	3P-2044 (1)	9N-3718 (1)
114-163	30-43	3P-2044 (5)	3P-2044 (1) 6V-3542 (1)	111-2371 (2)
163-242	43-64	3P-2044 (8)	3P-2044 (2)	9N-3718 (2)

** El período normal de mantenimiento es de 250 horas. Para ver las instrucciones completas sobre el mantenimiento del refrigerante, consulte el Manual de Operación y Mantenimiento.*

( ) Indica la cantidad necesaria.

ADITIVOS SUPLEMENTARES DO LÍQUIDO ARREFECEDOR

BENEFÍCIOS PARA O CLIENTE:

Protege contra cavitação, espuma, erosão, corrosão e acúmulo de crostas nos sistemas de arrefecimento.

- Fornece uma quantidade pré-determinada de condicionador de arrefecimento.

DESCRIÇÃO:

Com a operação normal, os aditivos se esgotam do líquido arrefecedor. Por isso, Aditivos Suplementares do Líquido Arrefecedor (SCA) devem ser acrescentados a todos os líquidos arrefecedores para serviço pesado em intervalos regulares. Além disso, quando um anticongelante pré-carregado, totalmente formulado não for usado, como o DEAC Caterpillar, uma carga inicial de SCA deve ser acrescentada ao sistema de arrefecimento. A quantidade de SCA acrescentada ao sistema depende da capacidade do sistema.

O SCA para abastecimento inicial é fornecido em forma de líquido. Os aditivos suplementares (SCA) para intervalos de manutenção estão à disposição em forma líquida e como um elemento com roscas. (Exceto os Motores da Família 3600)

NOTA:

A quantidade de SCA adicionada no abastecimento inicial não é a mesma que a acrescentada nos intervalos de manutenção.

Os elementos do aditivo do líquido arrefecedor podem ser usados com qualquer tipo de anticongelante etileno ou propileno que satisfaz as Especificações ASTM D4985 ou ASTM D5345.

NOTA:

Para uso apenas com líquido arrefecedor para serviço pesado padrão, não deve ser usado com Líquido Arrefecedor de Vida Longa.

PEÇAS NECESSÁRIAS:

Capacidade do Sistema de Arrefecimento		Líquido SCA Durante Abastecimento Inicial	Líquido SCA Durante Manutenção*	Elemento de Manutenção de SCA com Roscas*
Litros	Galões			
22-30	6-8	3P-2044 (1)	6V-3542 (1)	111-2370 (1)
30-38	8-10	3P-2044 (1) 6V-3542 (1)	111-2372 (1)	111-2369 (1)
38-49	10-13	3P-2044 (1) 8T-1589 (1)	111-2372 (1)	111-2369 (1)
49-64	13-17	3P-2044 (2)	8T-1589 (1)	9N-3368 (1)
64-83	17-22	3P-2044 (2) 8T-1589 (1)	111-2372 (1) 6V-3542 (1)	111-2371 (1)
83-114	22-30	3P-2044 (3) 8T-1589 (1)	3P-2044 (1)	9N-3718 (1)
114-163	30-43	3P-2044 (5)	3P-2044 (1) 6V-3542 (1)	111-2371 (2)
163-242	43-64	3P-2044 (8)	3P-2044 (2)	9N-3718 (2)

** O período normal de manutenção é de 250 horas. Consulte o Manual de Operação e Manutenção para obter instruções completas quanto à manutenção do líquido arrefecedor.*

( ) Indica a quantidade exigida.

KÜHLMITTELZUSATZ

VORTEILE FÜR DEN KUNDEN:

Schutz gegen Kavitation, Schaumbildung, Erosion, Korrosion und Kesselsteinbildung in Kühlsystemen.

- Richtig dosierter Kühlmittelzusatz

BESCHREIBUNG:

Additive erschöpfen sich während des Motorbetriebs. Deshalb muß allen HD-Kühlmitteln regelmäßig Kühlmittelzusatz beigefügt werden. Wenn bei Erstfüllung kein vollwertiges Fertigkühlmittel, wie das Frostschutz- und Kühlmittel für Dieselmotoren von Caterpiller (DEAC), verwendet wird, muß bei Erstfüllung Kühlmittelzusatz beigefügt werden. Wieviel Kühlmittelzusatz beigefügt werden muß, hängt vom Inhalt des Kühlsystems ab.

Für Erstfüllung ist Kühlmittelzusatz nur in flüssiger Form erhältlich. Für Wartungsintervalle ist Kühlmittelzusatz in flüssiger Form und als Zusatzelement erhältlich. (Für die Motorbaureihe 3600 sind keine Zusatzelemente erhältlich.)

ANMERKUNG:

Die Kühlmittelmenge bei Erstfüllung ist nicht die gleiche Menge, die bei Wartungsintervallen beigefügt werden muß.

Die Kühlmittelzusatzelemente können mit allen Frostschutzmitteln auf Ethylen- oder Propylenglykolbasis verwendet werden, die den Standards nach ASTM D4985 oder ASTM D5345 entsprechen.

ANMERKUNG:

Den Kühlmittelzusatz nicht mit Langzeitkühlmittel (ELC) von Caterpillar verwenden. Der Kühlmittelzusatz ist nur für HD-Kühlmittel bestimmt.

TEILEBEZEICHNUNG:

Kühlsysteminhalt		Kühlmittelzusatz bei Erstfüllung	Flüssiger Kühlmittelzusatz bei Wartung*	Kühlmittelzusatzelement bei Wartung*
Liter	US-Gall.			
22-30	(6-8)	3P-2044 (1)	6V-3542 (1)	111-2370 (1)
30-38	(8-10)	3P-2044 (1) 6V-3542 (1)	111-2372 (1)	111-2369 (1)
38-49	(10-13)	3P-2044 (1) 8T-1589 (1)	111-2372 (1)	111-2369 (1)
49-64	(13-17)	3P-2044 (2)	8T-1589 (1)	9N-3368 (1)
64-83	(17-22)	3P-2044 (2) 8T-1589 (1)	111-2372 (1) 6V-3542 (1)	111-2371 (1)
83-114	(22-30)	3P-2044 (3) 8T-1589 (1)	3P-2044 (1)	9N-3718 (1)
114-163	(30-43)	3P-2044 (5)	3P-2044 (1) 6V-3542 (1)	111-2371 (2)
163-242	(43-64)	3P-2044 (8)	3P-2044 (2)	9N-3718 (2)

** Der normale Wartungsintervall beträgt 250 Betriebsstunden. Für vollständige Anweisungen zur Wartung des Kühlsystems, siehe Betriebs- und Wartungshandbuch.*

( ) Erforderliche Anzahl

MAINTENANCE PARTS

DESCRIPTION	PART NUMBER	QTY	WHERE USED	PAGE
AIR INLET AND EXHAUST SYSTEM				
CAP AS-RAIN	7S-5003	1	DUST EJECTOR GP	197
ELEMENT AS-PRIMARY	106-3969	1	AIR CLEANER GP	196
ELEMENT AS-SECONDARY	106-3973	1	AIR CLEANER GP	196
ELEMENT-FILTER	7M-1674	1	LINES GP-AIR	202
		1	LINES GP-AIR	203
BASIC ENGINE				
BREATHER AS	4N-4668	2	COVER GP-VALVE MECHANISM	26
		3	COVER GP-VALVE MECHANISM	27
CAP-DUST	6V-0852	1	PLUG GP-CYLINDER BLOCK	101
FITTING-GREASE	3B-8485	1	BELT TIGHTENER GP	18
		1	DRIVE GP-FAN	70
		1	DRIVE GP-FAN	76
PLUG-DRAIN	5F-0304	1	HOUSING GP-FLYWHEEL	90
PLUG-O-RING	9S-4190	1	DRIVE GP-FAN	74
PLUG-O-RING (7/16-20 THD)	9S-4190	5	PLUG GP-CYLINDER BLOCK	101
PLUG-OIL DRAIN	4P-0513	1	PAN GP-OIL	96
V-BELT	133-6443	1	V-BELT SET	109
V-BELT SET (INCLUDES 4 BELTS)	123-5889	1	DRIVE GP-FAN	57
		1	DRIVE GP-FAN	58
		1	DRIVE GP-FAN	59
		1	DRIVE GP-FAN	62
		1	DRIVE GP-FAN	63
		1	DRIVE GP-FAN	64
		1	DRIVE GP-FAN	65
		1	DRIVE GP-FAN	66
		1	DRIVE GP-FAN	75
	133-6445	1	V-BELT SET	109
	180-4526	1	DRIVE GP-FAN	70
		1	DRIVE GP-FAN	74
		1	DRIVE GP-FAN	76

MAINTENANCE PARTS

DESCRIPTION	PART NUMBER	QTY	WHERE USED	PAGE
COOLING SYSTEM				
CAP AS-RADIATOR	031-1119	1	TANK GP-COOLANT	183
		1	TANK GP-WATER	184
		1	TANK GP-WATER	188
CIRCUIT BREAKER AS (15 AMP)	6T-3643	1	FAN GP-VARIABLE PITCH	152
ELEMENT AS-COOLANT CONDITIONER	9Y-1022	1	COOLANT CONDITIONER GP	143
FILTER (WATER PUMP)	111-2721	1	PUMP GP-WATER	172
		1	PUMP GP-WATER	174
		1	PUMP GP-WATER	176
FUSE (1/4 AMP)	137-2082	1	FAN GP-VARIABLE PITCH	152
		1	FAN GP-VARIABLE PITCH	154
FUSE (15 AMP)	8M-8948	1	FAN GP-VARIABLE PITCH	152
		1	FAN GP-VARIABLE PITCH	154
PLUG-DRAIN	7N-1447	1	RADIATOR GP	180
REGULATOR-WATER TEMPERATURE	7C-3095	2	LINES GP-WATER	166
REGULATOR-WATER TEMPERATURE (92 DEG C.)	4W-4794	2	LINES GP-WATER	158
		2	LINES GP-WATER	162
SEAL-LIP	3S-9643	1	LINES GP-WATER	158
		1	LINES GP-WATER	162
		1	LINES GP-WATER	166
V-BELT	135-8654	1	FAN GP-VARIABLE PITCH	152
		1	FAN GP-VARIABLE PITCH	154
ELECTRICAL AND STARTING SYSTEM				
BATTERY (12 VOLT)	9X-9730	2	BATTERY & WIRING GP	328
		2	BATTERY & WIRING GP	336
		2	BATTERY & WIRING GP	344
		2	BATTERY & WIRING GP	354
		2	BATTERY & WIRING GP	362
		2	BATTERY & WIRING GP	370
		2	STARTING AR-COLD WEATHER	476
		2	STARTING AR-COLD WEATHER	480
BRUSH AS	3T-9524	6	STARTING MOTOR GP-ELECTRIC	494
BRUSH AS (STARTING MOTOR)	3T-9524	6	STARTING MOTOR GP-ELECTRIC	484
CAP AS-DUST	6N-1604	2	HEATER GP-JACKET WATER	410
CAP-CONNECTOR	9G-4360	1	WIRING GP-CONSOLE	506
		1	WIRING GP-CONSOLE	508
CAP-FUSE HOLDER	7N-2867	1	WIRING GP-CONSOLE	506
	139-0178	1	WIRING GP-CONSOLE	508
		1	WIRING GP-CONSOLE	512
		1	WIRING GP-CONSOLE	516
CAP-RECEPTACLE	8C-6354	1	WIRING GP-CONSOLE	506
		1	WIRING GP-CONSOLE	508
		1	WIRING GP-CONSOLE	512
		1	WIRING GP-CONSOLE	516
CIRCUIT BREAKER AS (10 AMP)	9G-9487	3	WIRING GP-CONSOLE	506
		1	WIRING GP-CONSOLE	512
		1	WIRING GP-CONSOLE	516
CIRCUIT BREAKER AS (10 AMP) (AUX)	9G-9487	1	WIRING GP-CONSOLE	509
CIRCUIT BREAKER AS (10 AMP) (ENGINE START)	9G-9487	1	WIRING GP-CONSOLE	509
		1	WIRING GP-CONSOLE	512
		1	WIRING GP-CONSOLE	516

MAINTENANCE PARTS

DESCRIPTION	PART NUMBER	QTY	WHERE USED	PAGE
CIRCUIT BREAKER AS (10 AMP) (KEY)	9G-9487	1	WIRING GP-CONSOLE	508
CIRCUIT BREAKER AS (105 AMP)	3E-7294	2	WIRING GP-CONSOLE	506
CIRCUIT BREAKER AS (105 AMP) (ALTERNATOR)	3E-7294	1	WIRING GP-CONSOLE	508
		1	WIRING GP-CONSOLE	512
		1	WIRING GP-CONSOLE	516
CIRCUIT BREAKER AS (105 AMP) (MAIN)	3E-7294	1	WIRING GP-CONSOLE	508
		1	WIRING GP-CONSOLE	512
		1	WIRING GP-CONSOLE	516
CIRCUIT BREAKER AS (15 AMP)	3T-2662	1	WIRING GP-CONSOLE	506
	6N-8589	3	WIRING GP-CONSOLE	506
		1	WIRING GP-CONSOLE	512
		1	WIRING GP-CONSOLE	516
CIRCUIT BREAKER AS (15 AMP) (BLOWER)	6N-8589	1	WIRING GP-CONSOLE	509
CIRCUIT BREAKER AS (15 AMP) (ENGINE)	6N-8589	1	WIRING GP-CONSOLE	508
		1	WIRING GP-CONSOLE	512
		1	WIRING GP-CONSOLE	516
CIRCUIT BREAKER AS (15 AMP) (FAN MOTOR)	6N-8589	1	WIRING GP-CONSOLE	512
		1	WIRING GP-CONSOLE	516
CIRCUIT BREAKER AS (15 AMP) (HEAD LAMP)	3T-2662	1	WIRING GP-CONSOLE	508
CIRCUIT BREAKER AS (15 AMP) (HEADLIGHT)	3T-2662	1	WIRING GP-CONSOLE	512
		1	WIRING GP-CONSOLE	516
CIRCUIT BREAKER AS (15 AMP) (POWER OUTLET)	6N-8589	1	WIRING GP-CONSOLE	509
		1	WIRING GP-CONSOLE	512
		1	WIRING GP-CONSOLE	516
ELEMENT AS-JACKET WATER HEATER	6T-3764	2	HEATER GP-JACKET WATER	412
	9G-6655	2	HEATER GP-JACKET WATER	411
ELEMENT AS-JACKET WATER HEATER (120 VOLTS/1500 WATTS)	9G-6655	2	HEATER GP-JACKET WATER	410
FILTER-FOAM	111-4402	1	BATTERY & WIRING GP	330
		1	BATTERY & WIRING GP	337
		1	BATTERY & WIRING GP	345
		1	BATTERY & WIRING GP	354
		1	BATTERY & WIRING GP	362
		1	BATTERY & WIRING GP	370
FUSE	123-0932	1	HEATER GP-COOLANT	398
FUSE (10 AMP)	3K-8782	7	WIRING GP-CONSOLE	506
		7	WIRING GP-CONSOLE	508
		10	WIRING GP-CONSOLE	513
		10	WIRING GP-CONSOLE	517
FUSE (15 AMP)	8M-8948	1	WIRING GP-CONSOLE	506
		1	WIRING GP-CONSOLE	508
		2	WIRING GP-CONSOLE	513
		2	WIRING GP-CONSOLE	517
FUSE (20 AMP)	8M-0456	2	WIRING GP-CONSOLE	506
		2	WIRING GP-CONSOLE	508
		2	WIRING GP-CONSOLE	512

MAINTENANCE PARTS

DESCRIPTION	PART NUMBER	QTY	WHERE USED	PAGE
		2	WIRING GP-CONSOLE	516
HOLDER AS-BRUSH	6T-0363	6	STARTING MOTOR GP-ELECTRIC	495
HOLDER AS-BRUSH (STARTING MOTOR BRUSH)	6T-0363	6	STARTING MOTOR GP-ELECTRIC	484
KEY (BATTERY DISCONNECT)	8H-5306	1	SWITCH GP-DISCONNECT	499
KIT-TERMINAL	3N-3763	1	STARTING MOTOR GP-ELECTRIC	495
KIT-TERMINAL (STARTING MOTOR)	3N-3763	1	STARTING MOTOR GP-ELECTRIC	485
LAMP-HEAD (24 VOLT) (FLOODLIGHT)	9X-3463	1	LAMP GP-FLOOD	418
		1	LAMP GP-FLOOD	419
LAMP (24 VOLT)	3E-8825	2	WIRING GP-PLATFORM	522
		2	WIRING GP-PLATFORM	526
	7N-5876	4	WIRING GP-PLATFORM	522
		4	WIRING GP-PLATFORM	526
LAMP (24 VOLT) (DOME)	7N-9943	1	LAMP GP-DOME	414
LAMP (24 VOLT) (FLOOD)	9X-3463	1	LAMP GP-FLOOD	415
LAMP (24 VOLT) (65 WATT)	9X-3463	1	LAMP GP-FLOOD	416
LAMP (24 VOLT)(65 WATT)	9X-3463	1	LAMP GP-FLOOD	417
LENS AS-FLOOD	107-5853	1	LAMP GP-FLOOD	417
LENS AS (FLOODLIGHT)	107-5853	1	LAMP GP-FLOOD	415
		1	LAMP GP-FLOOD	416
	158-0248	1	LAMP GP-FLOOD	418
		1	LAMP GP-FLOOD	419
LENS (DOME LAMP)	7T-0020	1	LAMP GP-DOME	414
PADLOCK GP	5P-8502	1	STARTING AR-COLD WEATHER	477
		1	STARTING AR-COLD WEATHER	481
PLUG-PIPE	8T-6761	1	HEATER GP-COOLANT	399
SPRING	3T-9494	6	STARTING MOTOR GP-ELECTRIC	495
	9M-7609	1	STARTING MOTOR GP-ELECTRIC	494
SPRING (STARTING MOTOR BRUSH)	3T-9494	1	STARTING MOTOR GP-ELECTRIC	484
		6	STARTING MOTOR GP-ELECTRIC	485
V-BELT	4N-2531	1	ALTERNATOR GP-CHARGING	318
	6N-6657	1	ALTERNATOR GP-CHARGING	324
	9L-6645	1	ALTERNATOR GP-CHARGING	326
FRAME AND BODY				
PADLOCK GP	5P-8502	3	ENCLOSURE GP-ENGINE	694
		2	ENCLOSURE GP-FENDER	700
		2	ENCLOSURE GP-FENDER	704
		1	FENDER GP	708
		2	HOOD & GUARD GP	736
PLUG	106-8187	1	CASE & FRAME GP	678
		1	CASE & FRAME GP	680
		1	CASE & FRAME GP	682

MAINTENANCE PARTS

DESCRIPTION	PART NUMBER	QTY	WHERE USED	PAGE
FUEL SYSTEM				
CAP AS	6V-9830	1	FILTER GP-FUEL	248
		1	FILTER GP-FUEL	250
CAP AS-FUEL TANK	7X-7700	1	TANK GP-FUEL	308
		1	TANK GP-FUEL	313
CAP AS-FUEL TANK FILLER	101-8909	1	ADAPTER GP-FAST FILL FUEL	216
		1	ADAPTER GP-FAST FILL FUEL	218
CAP AS (13/16-16 THD)	6V-9830	1	FILTER & LINES GP-FUEL	246
CAP-DUST	9D-0630	1	ADAPTER GP-FAST FILL FUEL	216
		1	ADAPTER GP-FAST FILL FUEL	218
		1	ADAPTER GP-FAST FILL FUEL	220
		1	ADAPTER GP-FAST FILL FUEL	222
		1	ADAPTER GP-FAST FILL FUEL	224
		1	ADAPTER GP-FAST FILL FUEL	226
CARTRIDGE-FILTER	1Q-2541	1	TANK GP-FUEL	310
ELEMENT-FILTER	129-0373	1	FILTER & LINES GP-FUEL	246
		1	FILTER GP-WATER SEP & FUEL	252
		1	PUMP GP-FUEL PRM & PRIM FILTER	292
FILTER AS	1Q-3363	1	TANK GP-FUEL	310
FILTER AS-FUEL	1R-0749	2	LINES GP-FUEL FILTER	264
FILTER AS-WATER SEP & FUEL	129-0372	1	FILTER & LINES GP-FUEL	246
		1	PUMP GP-FUEL PRM & PRIM FILTER	292
FILTER AS-WATER SEP & FUEL (PRIMARY)	129-0372	1	FILTER GP-WATER SEP & FUEL	252
FILTER AS (WATER SEPARATOR & FUEL)	1R-0769	1	FILTER GP-WATER SEP & FUEL	253
FILTER (UNIT INJECTOR HYDRAULIC PUMP)	125-5835	1	DRIVE GP-UNIT INJ HYD PUMP	234
		1	DRIVE GP-UNIT INJ HYD PUMP	242
		1	DRIVE GP-UNIT INJ HYD PUMP	244
GASKET (FUEL PRIMING PUMP)	1P-0436	1	FILTER & LINES GP-FUEL	246
		1	PUMP GP-FUEL PRIMING	291
		1	PUMP GP-FUEL PRM & PRIM FILTER	292
GAUGE & CAP AS	1Q-3828	1	TANK GP-FUEL	310
KEY	5P-8500	1	TANK GP-FUEL	308
		1	TANK GP-FUEL	312
PADLOCK GP	5P-8502	1	ADAPTER GP-FAST FILL FUEL	218
		1	FILTER GP-FUEL	248
		1	FILTER GP-FUEL	250
		1	LINES GP-FUEL	262
		1	TANK GP-FUEL	308
		1	TANK GP-FUEL	312
SCREEN-FUEL TANK	6T-7774	1	FILTER GP-FUEL	250
		1	LINES GP-FUEL	262
SEAL-O-RING (110.49MM ID)	9X-8600	1	TANK GP-FUEL	308
STRAINER-FUEL	9P-7121	1	TANK GP-FUEL	308
STRAINER-FUEL TANK	9P-7121	1	TANK GP-FUEL	312
VENT AS	6G-7803	1	ADAPTER GP-FAST FILL FUEL	216

MAINTENANCE PARTS

DESCRIPTION	PART NUMBER	QTY	WHERE USED	PAGE
HYDRAULIC SYSTEM				
CAP-DUST	6V-0852	2	LINES GP-PUMP	943
		2	LINES GP-PUMP	948
		2	LINES GP-PUMP	956
		1	VALVE GP-PRESSURE CONTROL	1040
	8C-3451	1	TANK & FILTER GP-HYDRAULIC	998
CAP-FILLER (HYDRAULIC)	7H-1447	1	TANK & FILTER GP-HYDRAULIC	998
ELEMENT-FILTER (FIRE RESISTANT FLUID)	1U-2092	2	TANK & FILTER GP-HYDRAULIC	998
FILTER ELEMENT AS-OIL (HYDRAULIC/REVERSE FLOW) (DISPOSABLE)	1R-0735	2	TANK & FILTER GP-HYDRAULIC	998
FITTING-GREASE	3B-8489	1	CYLINDER GP-BULLDOZER TILT	902
		1	CYLINDER GP-BULLDOZER TILT	904
		1	CYLINDER GP-BULLDOZER TILT	906
		1	CYLINDER GP-DUAL TILT	908
		1	CYLINDER GP-DUAL TILT	910
		2	CYLINDER GP-RIPPER LIFT	912
		2	CYLINDER GP-RIPPER LIFT	914
		2	CYLINDER GP-RIPPER LIFT	916
		2	CYLINDER GP-RIPPER LIFT	918
		2	CYLINDER GP-RIPPER LIFT	920
		2	CYLINDER GP-RIPPER TILT	930
FITTING-GREASE (1/8-27 THD)	3B-8489	2	CYLINDER GP-RIPPER LIFT	922
PADLOCK GP	5P-8502	1	COVER GP-HYDRAULIC TANK CAP	896
SCREEN AS	9T-7571	1	TANK & FILTER GP-HYDRAULIC	998
SEAL-O-RING	2S-4078	1	LINES GP-PUMP	942
		1	LINES GP-PUMP	943
		1	LINES GP-PUMP	949
		2	LINES GP-PUMP	956
		1	LINES GP-PUMP	958
		1	VALVE GP-CONTROL	1026
STRAINER AS	5D-7927	1	TANK & FILTER GP-HYDRAULIC	998
IMPLEMENTS				
BREATHER	2Y-7359	1	CASE GP-WINCH	1070
	9G-5127	1	INSTALLATION AR-WINCH	1102
ELEMENT-FILTER	2P-5834	1	CONTROL GP-WINCH	1086
FILTER-MAGNETIC	8S-9129	1	SCREEN GP-MAGNETIC	1136
FITTING-GREASE	3B-8489	6	FAIRLEAD GP-WINCH	1089
		2	FRAME GP-RIPPER	1090
		2	FRAME GP-RIPPER	1092
		2	FRAME GP-RIPPER	1094
		2	FRAME GP-RIPPER	1096
		2	FRAME GP-RIPPER	1098
		2	KIT-OVERPACK	1103
		2	KIT-OVERPACK	1104
		2	MOUNTING GP-CYLINDER	1114
FITTING-GREASE (1/8-27 THD)	3B-8489	1	BRACE GP-BULLDOZER	1064
PLUG-DRAIN	5H-7110	1	CASE GP-WINCH	1070
SCREEN-SUCTION	8S-9130	1	SCREEN GP-MAGNETIC	1136

MAINTENANCE PARTS

DESCRIPTION	PART NUMBER	QTY	WHERE USED	PAGE
LUBRICATION SYSTEM				
CAP	110-8318	1	OIL CHANGE GP-HIGH SPEED	132
CAP AS-FILLER	6N-2206	1	FILLER GP-ENGINE OIL	114
CAP-DUST	6V-0852	1	LINES GP-OIL SUPPLY	126
SCREEN AS-BELL	4N-0913	1	LINES GP-ENGINE OIL	120
MACHINE ARRANGEMENT				
BATTERY (12 VOLT/DRY)	9X-9730	4	MACHINE AR-COLD WEATHER	2
OPERATOR STATION				
BASE-INDICATOR LIGHT	3T-0304	2	PANEL GP-INSTRUMENT	1352
BLADE AS-WIPER	5C-8811	1	WIPER GP-WINDOW	1456
		1	WIPER GP-WINDOW	1460
	6V-5849	4	WIPER GP-WINDOW	1456
		4	WIPER GP-WINDOW	1460
	6V-5851	1	WIPER GP-WINDOW	1456
		1	WIPER GP-WINDOW	1460
CAP-AIR CONDITIONER VALVE (7/16 X 20 THD)	2L-1224	1	CONDENSER GP-REFRIGERANT	1264
CAP-VENTED	8E-8292	1	TANK GP-WINDOW WASHER	1424
CIRCUIT BREAKER AS (15 AMP)	6N-8589	1	CONDENSER & MTG GP-REFRIGERANT	1252
	6T-3643	1	CONDENSER & MTG GP-REFRIGERANT	1257
		1	CONDENSER & MTG GP-REFRIGERANT	1260
FILTER-AIR (CAB)	7T-1890	1	HEATER GP	1280
		1	HEATER GP	1282
	107-0266	1	HEATER GP	1280
		1	HEATER GP	1282
KNOB	5M-8500	2	CAB GP	1235
LAMP (24 VOLT)	7N-1996	2	PANEL GP-INSTRUMENT	1352
LAMP (28 VOLT)	7N-1996	2	PANEL GP-INSTRUMENT	1350
LENS-RED	6T-7058	2	PANEL GP-INSTRUMENT	1350
		2	PANEL GP-INSTRUMENT	1352
SEAT BELT GP	183-3648	1	SEAT GP	1386
		1	SEAT GP	1387
SEAT BELT GP (RETRACTABLE)	8Y-3792	1	SEAT GP-SUSPENSION	1391
	122-4617	1	SEAT GP	1380
		1	SEAT GP-SUSPENSION	1389
		1	SEAT GP-SUSPENSION	1392
	156-1148	1	SEAT GP	1381
		1	SEAT GP-SUSPENSION	1393
V-BELT	2P-6532	1	COMPRESSOR GP-REFRIGERANT	1244
		1	COMPRESSOR GP-REFRIGERANT	1248
	2P-7333	1	COMPRESSOR GP-REFRIGERANT	1242
POWER TRAIN				
BOLT (1-14X3.75 IN)	9S-1367	10	GEAR GP-BEVEL & TRANSFER	598
BREATHER	9G-5127	1	LINES GP-POWER TRAIN OIL	614
		1	LINES GP-POWER TRAIN OIL	618
		1	LINES GP-POWER TRAIN OIL	622
BREATHER (PRESSURE RELIEF)	9G-5127	1	LINES GP-POWER TRAIN OIL	603
		1	LINES GP-POWER TRAIN OIL	609

MAINTENANCE PARTS

DESCRIPTION	PART NUMBER	QTY	WHERE USED	PAGE
CAP AS-FILLER	6N-2985	1	LINES GP-POWER TRAIN OIL	602
		1	LINES GP-POWER TRAIN OIL	608
		1	LINES GP-POWER TRAIN OIL	614
		1	LINES GP-POWER TRAIN OIL	618
		1	LINES GP-POWER TRAIN OIL	622
CAP-DUST	6V-0852	2	CASE & PARTS GP-PLANETARY	536
		2	LINES GP-POWER TRAIN OIL	602
		2	LINES GP-POWER TRAIN OIL	603
		2	LINES GP-POWER TRAIN OIL	608
		2	LINES GP-POWER TRAIN OIL	609
		4	LINES GP-POWER TRAIN OIL	614
		4	LINES GP-POWER TRAIN OIL	618
		4	LINES GP-POWER TRAIN OIL	622
		1	VALVE & MTG GP-PILOT	651
		1	VALVE GP-RELIEF	666
		1	VALVE GP-RELIEF	668
		4	VALVE GP-TRANSMISSION CONTROL	673
	8C-3445	1	FILTER GP-OIL	550
	8C-3447	1	LINES GP-POWER TRAIN OIL	603
		1	LINES GP-POWER TRAIN OIL	609
		1	LINES GP-POWER TRAIN OIL	614
		1	LINES GP-POWER TRAIN OIL	618
		1	LINES GP-POWER TRAIN OIL	622
FILTER AS-ENGINE OIL	1R-0716	2	FILTER GP-OIL	550
FILTER ELEMENT AS-OIL	132-8875	1	FILTER GP-OIL	552
	132-8876	1	FILTER GP-OIL	554
		1	FILTER GP-OIL	556
		2	LINES GP-POWER TRAIN OIL	614
		2	LINES GP-POWER TRAIN OIL	618
		2	LINES GP-POWER TRAIN OIL	622
FITTING-GREASE (1/8-27 THD)	3B-8489	1	final DRIVE GP	582
PLUG	9S-4191	2	FILTER GP-OIL	554
		2	FILTER GP-OIL	556
		2	PUMP GP-GEAR	636
		1	TORQUE CONVERTER GP	646
		2	VALVE GP-CONTROL	654
		2	VALVE GP-CONTROL	656
		2	VALVE GP-CONTROL	658
PLUG-MAGNETIC	6V-3298	1	final DRIVE GP	558
		1	final DRIVE GP	562
		1	final DRIVE GP	566
		1	final DRIVE GP	570
		1	final DRIVE GP	574
		1	final DRIVE GP	578
		1	final DRIVE GP	582
		1	final DRIVE GP	586
		1	final DRIVE GP	590
		1	final DRIVE GP	594
SCREEN-SUCTION	3S-3875	1	LINES GP-POWER TRAIN OIL	602
		1	LINES GP-POWER TRAIN OIL	608
		1	LINES GP-POWER TRAIN OIL	614
		1	LINES GP-POWER TRAIN OIL	618
		1	LINES GP-POWER TRAIN OIL	622
	8S-9130	1	CASE & PARTS GP-PLANETARY	536

MAINTENANCE PARTS

DESCRIPTION	PART NUMBER	QTY	WHERE USED	PAGE
		1	TORQUE CONVERTER GP	646
SEAL-O-RING	2S-4078	1	final DRIVE GP	558
		1	final DRIVE GP	562
		1	final DRIVE GP	566
		1	final DRIVE GP	570
		1	final DRIVE GP	574
		1	final DRIVE GP	578
		1	final DRIVE GP	582
		1	final DRIVE GP	586
		1	final DRIVE GP	590
		1	final DRIVE GP	594
	3J-1907	2	FILTER GP-OIL	554
		2	FILTER GP-OIL	556
STEERING AND BRAKING SYSTEM				
CAP-DUST	6V-0852	4	VALVE & MTG GP-STEERING	877
UNDERCARRIAGE				
BREATHER	198-7711	1	LUBRICATION GP-EQUALIZER BAR	796
CAP AS-OIL FILLER	5L-2952	1	LUBRICATION GP-EQUALIZER BAR	796
CAP AS-OIL LEVEL	9W-8277	1	LUBRICATION GP-PIVOT SHAFT	798
		1	LUBRICATION GP-PIVOT SHAFT	800
FITTING	1K-6853	4	BAR GP-EQUALIZER	746
FITTING-GREASE	3B-8489	2	BAR GP-EQUALIZER	746
		2	BAR GP-EQUALIZER	748
		2	BAR GP-EQUALIZER	752
		2	BAR GP-EQUALIZER	757
		2	IDLER GP-TRACK	786
FITTING-GREASE (1/8-27 THD)	3B-8489	2	BAR GP-EQUALIZER	754
		2	BAR GP-EQUALIZER	759
		2	BAR GP-EQUALIZER	760
		2	BAR GP-EQUALIZER	761
PLUG-DRAIN	4T-2069	3	FRAME GP-TELESCOPING RECOIL	768
		3	FRAME GP-TELESCOPING RECOIL	770
		6	FRAME GP-TELESCOPING RECOIL	772
		6	FRAME GP-TELESCOPING RECOIL	774
		3	FRAME GP-TELESCOPING RECOIL	776
		3	FRAME GP-TELESCOPING RECOIL	778
		6	FRAME GP-TELESCOPING RECOIL	780

PIÈCES DE RECHANGE

DESCRIPTION	NUMÉRO DE PIECÈS	QTÉ	DOMAINE D'APPLICATION	PAGE
CHÂSSIS ET BENNE				
BOUCHON FILETÉ	106-8187	1	CHÂSSIS ET CARTER (ASS)	678
		1	CHÂSSIS ET CARTER (ASS)	680
		1	CHÂSSIS ET CARTER (ASS)	682
CADENAS (ASS)	5P-8502	2	CAPOT ET PROTECTION (ASS)	736
		2	CARENAGE - GARDE-BOUE (ASS)	700
		2	CARENAGE - GARDE-BOUE (ASS)	704
		3	CARENAGE DE MOTEUR (ASS)	694
		1	GARDE-BOUE (ASS)	708
CIRCUIT D'ADMISSION D'AIR ET D'ECHAPPEMENT				
DÉFLECTEUR DE PLUIE (ENS)	7S-5003	1	ÉJECTEUR AUTOMATIQUE DE POUSSIÈRE (ASS)	197
ÉLÉMENT DE FILTRE	7M-1674	1	CANALISATIONS D'AIR (ASS)	202
		1	CANALISATIONS D'AIR (ASS)	203
ÉLÉMENT PRINCIPAL (ENS)	106-3969	1	FILTRE A AIR (ASS)	196
ÉLÉMENT SECONDAIRE (ENS)	106-3973	1	FILTRE A AIR (ASS)	196
CIRCUIT DE CARBURANT				
BOUCHON DE REMPLISSAGE DU RÉSERVOIR DE CARBURANT	101-8909	1	ADAPTATEUR DE REMPLIS. RAPIDE DE CARBURANT (ASS)	216
		1	ADAPTATEUR DE REMPLIS. RAPIDE DE CARBURANT (ASS)	218
BOUCHON DE RÉSERVOIR DE CARBURANT (ENS)	7X-7700	1	RÉSERVOIR DE CARBURANT (ASS)	308
		1	RÉSERVOIR DE CARBURANT (ASS)	313
CADENAS (ASS)	5P-8502	1	ADAPTATEUR DE REMPLIS. RAPIDE DE CARBURANT (ASS)	218
		1	FILTRE A CARBURANT (ASS)	248
		1	FILTRE A CARBURANT (ASS)	250
		1	RÉSERVOIR DE CARBURANT (ASS)	308
		1	RÉSERVOIR DE CARBURANT (ASS)	312
		1	CANALISATIONS DE CARBURANT (ASS)	262
CHAPEAU (ENS)	6V-9830	1	FILTRE A CARBURANT (ASS)	248
		1	FILTRE A CARBURANT (ASS)	250
CHAPEAU (ENS) (FILET 13/16-16)	6V-9830	1	FILTRE ET CANALISATIONS DE CARBURANT (ASS)	246
CLÉ	5P-8500	1	RÉSERVOIR DE CARBURANT (ASS)	308
		1	RÉSERVOIR DE CARBURANT (ASS)	312
ÉLÉMENT DE FILTRE	129-0373	1	FILTRE DE SÉPARATEUR D'EAU ET DE CARBURANT (ASS)	252
		1	FILTRE ET CANALISATIONS DE CARBURANT (ASS)	246
		1	POMPE D'AMORÇAGE DE CARBURANT ET FILTRE PRINCIPAL	292
ÉVENT (ENS)	6G-7803	1	ADAPTATEUR DE REMPLIS. RAPIDE DE CARBURANT (ASS)	216
FILTRE - SÉPARATEUR D'EAU ET DE CARBURANT (ENS)	129-0372	1	FILTRE ET CANALISATIONS DE CARBURANT (ASS)	246
		1	POMPE D'AMORÇAGE DE CARBURANT ET FILTRE PRINCIPAL	292
FILTRE - SÉPARATEUR D'EAU ET DE CARBURANT (ENS) (PRINCIPAL)	129-0372	1	FILTRE DE SÉPARATEUR D'EAU ET DE CARBURANT (ASS)	252

PIÈCES DE RECHANGE

DESCRIPTION	NUMÉRO DE PIECÈS	QTÉ	DOMAINE D'APPLICATION	PAGE
FILTRE À CARBURANT	9P-7121	1	RÉSERVOIR DE CARBURANT (ASS)	308
FILTRE A CARBURANT (ENS)	1R-0749	2	CANALISATIONS DU FILTRE A CARBURANT (ASS)	264
FILTRE DE TYPE À CARTOUCHE	1Q-2541	1	RÉSERVOIR DE CARBURANT (ASS)	310
FILTRE (ENS)	1Q-3363	1	RÉSERVOIR DE CARBURANT (ASS)	310
FILTRE (ENS) (SÉPARATEUR D'EAU ET CARBURANT)	1R-0769	1	FILTRE DE SÉPARATEUR D'EAU ET DE CARBURANT (ASS)	253
FILTRE (INJECTEUR DE POMPE HYDRAULIQUE)	125-5835	1	ENTRAINEMENT D'INJECTEURS-POMPES HYDRAULIQUES	234
		1	ENTRAINEMENT D'INJECTEURS-POMPES HYDRAULIQUES	242
		1	ENTRAINEMENT D'INJECTEURS-POMPES HYDRAULIQUES	244
INSTRUMENT ET BOUCHON (ENS)	1Q-3828	1	RÉSERVOIR DE CARBURANT (ASS)	310
JOINT PLAT (POMPE D'AMORÇAGE DE CARBURANT)	1P-0436	1	FILTRE ET CANALISATIONS DE CARBURANT (ASS)	246
		1	POMPE D'AMORÇAGE DE CARBURANT (ASS)	291
		1	POMPE D'AMORÇAGE DE CARBURANT ET FILTRE PRINCIPAL	292
JOINT TORIQUE (DIA INT 110,49MM)	9X-8600	1	RÉSERVOIR DE CARBURANT (ASS)	308
PARE-POUSSIERE	9D-0630	1	ADAPTATEUR DE REMPLIS. RAPIDE DE CARBURANT (ASS)	216
		1	ADAPTATEUR DE REMPLIS. RAPIDE DE CARBURANT (ASS)	218
		1	ADAPTATEUR DE REMPLIS. RAPIDE DE CARBURANT (ASS)	220
		1	ADAPTATEUR DE REMPLIS. RAPIDE DE CARBURANT (ASS)	222
		1	ADAPTATEUR DE REMPLIS. RAPIDE DE CARBURANT (ASS)	224
		1	ADAPTATEUR DE REMPLIS. RAPIDE DE CARBURANT (ASS)	226
TAMIS - RÉSERVOIR DE CARBURANT	6T-7774	1	CANALISATIONS DE CARBURANT (ASS)	262
		1	FILTRE A CARBURANT (ASS)	250
TAMIS DE RÉSERVOIR DE CARBURANT	9P-7121	1	RÉSERVOIR DE CARBURANT (ASS)	312
CIRCUIT DE DÉMARRAGE ET ÉLECTRIQUE				
AMPOULE (24 VOLTS)	3E-8825	2	CABLAGE - PLATE-FORME (ASS)	522
		2	CABLAGE - PLATE-FORME (ASS)	526
	7N-5876	4	CABLAGE - PLATE-FORME (ASS)	522
		4	CABLAGE - PLATE-FORME (ASS)	526
AMPOULE (24 VOLTS) (PLAFONNIER)	7N-9943	1	PLAFONNIER (ASS)	414
AMPOULE (24 VOLTS) (PROJECTEUR)	9X-3463	1	LAMPE - PHARE (ASS)	415
AMPOULE (24 VOLTS) (65 WATTS)	9X-3463	1	LAMPE - PHARE (ASS)	416
AMPOULE (24 VOLTS)(65 WATTS)	9X-3463	1	LAMPE - PHARE (ASS)	417
BATTERIE (12 VOLTS)	9X-9730	2	BATTERIE ET CÂBLAGE	328
		2	BATTERIE ET CÂBLAGE	336
		2	BATTERIE ET CÂBLAGE	344
		2	BATTERIE ET CÂBLAGE	354

PIÈCES DE RECHANGE

DESCRIPTION	NUMÉRO DE PIECÈS	QTÉ	DOMAINE D'APPLICATION	PAGE
		2	BATTERIE ET CÂBLAGE	362
		2	BATTERIE ET CÂBLAGE	370
		2	DÉMARRAGE PAR TEMPS FROID (VERSION)	476
		2	DÉMARRAGE PAR TEMPS FROID (VERSION)	480
BOUCHON DE PRISE ÉLECTRIQUE	8C-6354	1	CABLAGE DE CONSOLE (ASS)	506
		1	CABLAGE DE CONSOLE (ASS)	508
		1	CABLAGE DE CONSOLE (ASS)	512
		1	CABLAGE DE CONSOLE (ASS)	516
BOUCHON FILETÉ	8T-6761	1	RÉCHAUFFEUR DU LIQUIDE DE REFROIDISSEMENT (ASS)	399
BROSSE (ENS)	3T-9524	6	DÉMARREUR ÉLECTRIQUE (ASS)	494
BROSSE (ENS) (DÉMARREUR)	3T-9524	6	DÉMARREUR ÉLECTRIQUE (ASS)	484
CADENAS (ASS)	5P-8502	1	DÉMARRAGE PAR TEMPS FROID (VERSION)	477
		1	DÉMARRAGE PAR TEMPS FROID (VERSION)	481
CHAPEAU ANTI-POUSSIERE	6N-1604	2	EAU DES CHEMISES - RECHAUFFEUR (ASS)	410
CHAPEAU DE CONNECTEUR	9G-4360	1	CABLAGE DE CONSOLE (ASS)	506
		1	CABLAGE DE CONSOLE (ASS)	508
CHAPEAU (PORTE-FUSIBLES)	7N-2867	1	CABLAGE DE CONSOLE (ASS)	506
	139-0178	1	CABLAGE DE CONSOLE (ASS)	508
		1	CABLAGE DE CONSOLE (ASS)	512
		1	CABLAGE DE CONSOLE (ASS)	516
CLÉ (COUPE-BATTERIE)	8H-5306	1	ROBINET DE BATTERIE (ASS)	499
COURROIE TRAPEZOIDALE	4N-2531	1	ALTERNATEUR DE CHARGE (ASS)	318
	6N-6657	1	ALTERNATEUR DE CHARGE (ASS)	324
	9L-6645	1	ALTERNATEUR DE CHARGE (ASS)	326
DISJONCTEUR (ENS) (10A)	9G-9487	3	CABLAGE DE CONSOLE (ASS)	506
		1	CABLAGE DE CONSOLE (ASS)	512
		1	CABLAGE DE CONSOLE (ASS)	516
DISJONCTEUR (ENS) (10A) (AUXILIAIRE)	9G-9487	1	CABLAGE DE CONSOLE (ASS)	509
DISJONCTEUR (ENS) (10A) (CLÉ)	9G-9487	1	CABLAGE DE CONSOLE (ASS)	508
DISJONCTEUR (ENS) (10A) (DÉMARRAGE DU MOTEUR)	9G-9487	1	CABLAGE DE CONSOLE (ASS)	509
		1	CABLAGE DE CONSOLE (ASS)	512
		1	CABLAGE DE CONSOLE (ASS)	516
DISJONCTEUR (ENS) (105A)	3E-7294	2	CABLAGE DE CONSOLE (ASS)	506
DISJONCTEUR (ENS) (105A) (ALTERNATEUR)	3E-7294	1	CABLAGE DE CONSOLE (ASS)	508
		1	CABLAGE DE CONSOLE (ASS)	512
		1	CABLAGE DE CONSOLE (ASS)	516
DISJONCTEUR (ENS) (105A) (PRINCIPAL)	3E-7294	1	CABLAGE DE CONSOLE (ASS)	508
		1	CABLAGE DE CONSOLE (ASS)	512
		1	CABLAGE DE CONSOLE (ASS)	516
DISJONCTEUR (ENS) (15A)	3T-2662	1	CABLAGE DE CONSOLE (ASS)	506
	6N-8589	3	CABLAGE DE CONSOLE (ASS)	506
		1	CABLAGE DE CONSOLE (ASS)	512
		1	CABLAGE DE CONSOLE (ASS)	516

PIÈCES DE RECHANGE

DESCRIPTION	NUMÉRO DE PIECÈS	QTÉ	DOMAINE D'APPLICATION	PAGE
DISJONCTEUR (ENS) (15A) (ALIMENTATION)	6N-8589	1	CABLAGE DE CONSOLE (ASS)	509
		1	CABLAGE DE CONSOLE (ASS)	512
		1	CABLAGE DE CONSOLE (ASS)	516
DISJONCTEUR (ENS) (15A) (MOTEUR)	6N-8589	1	CABLAGE DE CONSOLE (ASS)	508
		1	CABLAGE DE CONSOLE (ASS)	512
		1	CABLAGE DE CONSOLE (ASS)	516
DISJONCTEUR (ENS) (15A) (MOTEUR DE VENTILATEUR)	6N-8589	1	CABLAGE DE CONSOLE (ASS)	512
		1	CABLAGE DE CONSOLE (ASS)	516
DISJONCTEUR (ENS) (15A) (PHARE AV)	3T-2662	1	CABLAGE DE CONSOLE (ASS)	508
DISJONCTEUR (ENS) (15A) (PHARES)	3T-2662	1	CABLAGE DE CONSOLE (ASS)	512
		1	CABLAGE DE CONSOLE (ASS)	516
DISJONCTEUR (ENS) (15A) (SOUFFLANT)	6N-8589	1	CABLAGE DE CONSOLE (ASS)	509
ÉLÉMENT DU RÉCHAUFFEUR D'EAU DES CHEMISES (ENS)	6T-3764	2	EAU DES CHEMISES - RECHAUFFEUR (ASS)	412
	9G-6655	2	EAU DES CHEMISES - RECHAUFFEUR (ASS)	411
ÉLÉMENT DU RÉCHAUFFEUR D'EAU DES CHEMISES (ENS) (120 VOLTS/1500 WATTS)	9G-6655	2	EAU DES CHEMISES - RECHAUFFEUR (ASS)	410
FILTRE A MOUSSE	111-4402	1	BATTERIE ET CÂBLAGE	330
		1	BATTERIE ET CÂBLAGE	337
		1	BATTERIE ET CÂBLAGE	345
		1	BATTERIE ET CÂBLAGE	354
		1	BATTERIE ET CÂBLAGE	362
		1	BATTERIE ET CÂBLAGE	370
FUSIBLE	123-0932	1	RÉCHAUFFEUR DU LIQUIDE DE REFROIDISSEMENT (ASS)	398
FUSIBLE (10A)	3K-8782	7	CABLAGE DE CONSOLE (ASS)	506
		7	CABLAGE DE CONSOLE (ASS)	508
		10	CABLAGE DE CONSOLE (ASS)	513
		10	CABLAGE DE CONSOLE (ASS)	517
FUSIBLE (15A)	8M-8948	1	CABLAGE DE CONSOLE (ASS)	506
		1	CABLAGE DE CONSOLE (ASS)	508
		2	CABLAGE DE CONSOLE (ASS)	513
		2	CABLAGE DE CONSOLE (ASS)	517
FUSIBLE (20 A)	8M-0456	2	CABLAGE DE CONSOLE (ASS)	506
		2	CABLAGE DE CONSOLE (ASS)	508
		2	CABLAGE DE CONSOLE (ASS)	512
		2	CABLAGE DE CONSOLE (ASS)	516
KIT DE BORNE	3N-3763	1	DÉMARREUR ÉLECTRIQUE (ASS)	495
KIT DE BORNE (DÉMARREUR)	3N-3763	1	DÉMARREUR ÉLECTRIQUE (ASS)	485
LAMPE - FEUX AV (24 VOLTS) (PROJECTEUR)	9X-3463	1	LAMPE - PHARE (ASS)	418
		1	LAMPE - PHARE (ASS)	419
LENTILLE DE PROJECTEUR (ENS)	107-5853	1	LAMPE - PHARE (ASS)	417
LENTILLE (ENS) (PLAFONNIER)	107-5853	1	LAMPE - PHARE (ASS)	415
		1	LAMPE - PHARE (ASS)	416
LENTILLE (ENS) (PROJECTEUR)	158-0248	1	LAMPE - PHARE (ASS)	418
		1	LAMPE - PHARE (ASS)	419
LENTILLE (PLAFONNIER)	7T-0020	1	PLAFONNIER (ASS)	414
PORTE-BALAIS (ENS)	6T-0363	6	DÉMARREUR ÉLECTRIQUE (ASS)	495

PIÈCES DE RECHANGE

DESCRIPTION	NUMÉRO DE PIECÈS	QTÉ	DOMAINE D'APPLICATION	PAGE
PORTE-BALAIS (ENS) (BROSSE DE DÉMARREUR)	6T-0363	6	DÉMARREUR ÉLECTRIQUE (ASS)	484
RESSORT	3T-9494	6	DÉMARREUR ÉLECTRIQUE (ASS)	495
	9M-7609	1	DÉMARREUR ÉLECTRIQUE (ASS)	494
RESSORT (BROSSE DE DÉMARREUR)	3T-9494	1	DÉMARREUR ÉLECTRIQUE (ASS)	484
		6	DÉMARREUR ÉLECTRIQUE (ASS)	485
CIRCUIT DE DIRECTION ET DE FREIN				
PARE-POUSSIERE	6V-0852	4	SOUPAPE DE DIRECTION ET MONTAGE (ENS)	877
CIRCUIT DE GRAISSAGE				
BOUCHON DE GOULOTTE DE REMPLISSAGE (ENS)	6N-2206	1	BOUCHON DE REMPLISSAGE D'HUILE MOTEUR (ASS)	114
CHAPEAU	110-8318	1	DISPOSITIF DE VIDANGE RAPIDE D'HUILE (ASS)	132
PARE-POUSSIERE	6V-0852	1	CANALISATIONS D'ALIMENTATION D'HUILE (ASS)	126
TAMIS DE CLOCHE (ENS)	4N-0913	1	CANALISATIONS D'HUILE MOTEUR (ASS)	120
CIRCUIT DE REFROIDISSEMENT				
BOUCHON DE RADIATEUR (ENS)	031-1119	1	RÉSERVOIR D'EAU (ASS)	184
		1	RÉSERVOIR D'EAU (ASS)	188
		1	RÉSERVOIR DU LIQUIDE DE REFROIDISSEMENT (ASS)	183
BOUCHON DE VIDANGE	7N-1447	1	RADIATEUR (ASS)	180
COURROIE TRAPEZOIDALE	135-8654	1	VENTILATEUR VARIABLE (ASS)	152
		1	VENTILATEUR VARIABLE (ASS)	154
DISJONCTEUR (ENS) (15A)	6T-3643	1	VENTILATEUR VARIABLE (ASS)	152
ELEMENT D'ADDITIF POUR LIQUIDE DE REFROIDISSEMENT	9Y-1022	1	ADDITIF POUR LIQUIDE DE REFROIDISSEMENT (ASS)	143
FILTRE (POMPE À EAU)	111-2721	1	POMPE A EAU (ASS)	172
		1	POMPE A EAU (ASS)	174
		1	POMPE A EAU (ASS)	176
FUSIBLE (1/4A)	137-2082	1	VENTILATEUR VARIABLE (ASS)	152
		1	VENTILATEUR VARIABLE (ASS)	154
FUSIBLE (15A)	8M-8948	1	VENTILATEUR VARIABLE (ASS)	152
		1	VENTILATEUR VARIABLE (ASS)	154
LÈVRE	3S-9643	1	CANALISATIONS D'EAU (ASS)	158
		1	CANALISATIONS D'EAU (ASS)	162
		1	CANALISATIONS D'EAU (ASS)	166
THERMOSTAT-TEMPÉRATURE D'EAU	7C-3095	2	CANALISATIONS D'EAU (ASS)	166
THERMOSTAT-TEMPÉRATURE D'EAU (92 DEGRÉS C)	4W-4794	2	CANALISATIONS D'EAU (ASS)	158
		2	CANALISATIONS D'EAU (ASS)	162

PIÈCES DE RECHANGE

DESCRIPTION	NUMÉRO DE PIECÈS	QTÉ	DOMAINE D'APPLICATION	PAGE
CIRCUIT HYDRAULIQUE				
BOUCHON DE GOULOTTE DE REMPLISSAGE (HYDRAULIQUE)	7H-1447	1	RÉSERVOIR HYDRAULIQUE ET FILTRE (ASS)	998
CADENAS (ASS)	5P-8502	1	COUVERCLE DE RÉSERVOIR HYDRAULIQUE	896
CREPINE (ENS)	5D-7927	1	RÉSERVOIR HYDRAULIQUE ET FILTRE (ASS)	998
ÉCRAN (ENS)	9T-7571	1	RÉSERVOIR HYDRAULIQUE ET FILTRE (ASS)	998
ÉLÉMENT DE FILTRE À HUILE (ENS) (DÉBIT HYDRAULIQUE/RETOUR DE DÉBIT) (JETABLE)	1R-0735	2	RÉSERVOIR HYDRAULIQUE ET FILTRE (ASS)	998
ÉLÉMENT DE FILTRE (LIQUIDE RÉSISTANT AU FEU)	1U-2092	2	RÉSERVOIR HYDRAULIQUE ET FILTRE (ASS)	998
GRAISSEUR	3B-8489	2	VERIN DE LEVAGE DE RIPPER (ASS)	912
		2	VERIN DE LEVAGE DE RIPPER (ASS)	914
		2	VERIN DE LEVAGE DE RIPPER (ASS)	916
		2	VERIN DE LEVAGE DE RIPPER (ASS)	918
		2	VERIN DE LEVAGE DE RIPPER (ASS)	920
		1	VÉRIN D'INCLINAISON DE BULLDOZER (ASS)	902
		1	VÉRIN D'INCLINAISON DE BULLDOZER (ASS)	904
		1	VÉRIN D'INCLINAISON DE BULLDOZER (ASS)	906
		1	VÉRIN D'INCLINAISON DOUBLE (ASS)	908
		1	VÉRIN D'INCLINAISON DOUBLE (ASS)	910
		2	VERIN D'INCLINAISON DU RIPPER (ASS)	930
GRAISSEUR (FILET 1/8-27)	3B-8489	2	VERIN DE LEVAGE DE RIPPER (ASS)	922
JOINT TORIQUE	2S-4078	1	CANALISATIONS DE POMPE (ASS)	942
		1	CANALISATIONS DE POMPE (ASS)	943
		1	CANALISATIONS DE POMPE (ASS)	949
		2	CANALISATIONS DE POMPE (ASS)	956
		1	CANALISATIONS DE POMPE (ASS)	958
		1	DISTRIBUTEUR (ASS)	1026
PARE-POUSSIERE	6V-0852	2	CANALISATIONS DE POMPE (ASS)	943
		2	CANALISATIONS DE POMPE (ASS)	948
		2	CANALISATIONS DE POMPE (ASS)	956
		1	DISTRIBUTEUR DE PRESSION (ASS)	1040
	8C-3451	1	RÉSERVOIR HYDRAULIQUE ET FILTRE (ASS)	998

PIÈCES DE RECHANGE

DESCRIPTION	NUMÉRO DE PIECÈS	QTÉ	DOMAINE D'APPLICATION	PAGE
ÉQUIPEMENTS				
BOUCHON DE VIDANGE	5H-7110	1	CARTER - TREUIL (ASS)	1070
ÉCRAN MAGNÉTIQUE	8S-9129	1	ÉCRAN MAGNÉTIQUE (ASS)	1136
ÉLÉMENT DE FILTRE	2P-5834	1	COMMANDE DE TREUIL (ASS)	1086
GRAISSEUR	3B-8489	2	BATI DE RIPPER (ASS)	1090
		2	BATI DE RIPPER (ASS)	1092
		2	BATI DE RIPPER (ASS)	1094
		2	BATI DE RIPPER (ASS)	1096
		2	BATI DE RIPPER (ASS)	1098
		6	GUIDE-CABLE DE TREUIL (ASS)	1089
		2	KIT DE BOULONNERIE, JOINTS ET CALES D'ÉPAISSEUR	1103
		2	KIT DE BOULONNERIE, JOINTS ET CALES D'ÉPAISSEUR	1104
		2	MONTAGE DE VÉRIN (ASS)	1114
GRAISSEUR (FILET 1/8-27)	3B-8489	1	TIRANT DE BULLDOZER (ASS)	1064
RENIFLARD	2Y-7359	1	CARTER - TREUIL (ASS)	1070
	9G-5127	1	MONTAGE DE TREUIL (VERSION)	1102
TAMIS D'ASPIRATION	8S-9130	1	ÉCRAN MAGNÉTIQUE (ASS)	1136

PIÈCES DE RECHANGE

DESCRIPTION	NUMÉRO DE PIECÈS	QTÉ	DOMAINE D'APPLICATION	PAGE
MOTEUR standard				
BOUCHON DE VIDANGE	5F-0304	1	CARTER DE VOLANT (ASS)	90
BOUCHON DE VIDANGE D'HUILE	4P-0513	1	HUILE MOTEUR - CARTER (ASS)	96
BOUCHON-JOINT TORIQUE	9S-4190	1	ENTRAÎNEMENT DE VENTILATEUR (ASS)	74
BOUCHON-JOINT TORIQUE (FILET 7/16-20)	9S-4190	5	BOUCHON - BLOC-CYLINDRES	101
COURROIE TRAPEZOIDALE	133-6443	1	JEU DE COURROIES TRAPEZOIDALES	109
GRAISSEUR	3B-8485	1	ENTRAÎNEMENT DE VENTILATEUR (ASS)	70
		1	ENTRAÎNEMENT DE VENTILATEUR (ASS)	76
		1	TENDEUR DE COURROIE (ASS)	18
JEU DE COURROIES TRAPEZOIDALES (COMPREND 4 COURROIES)	123-5889	1	ENTRAÎNEMENT DE VENTILATEUR (ASS)	57
		1	ENTRAÎNEMENT DE VENTILATEUR (ASS)	58
		1	ENTRAÎNEMENT DE VENTILATEUR (ASS)	59
		1	ENTRAÎNEMENT DE VENTILATEUR (ASS)	62
		1	ENTRAÎNEMENT DE VENTILATEUR (ASS)	63
		1	ENTRAÎNEMENT DE VENTILATEUR (ASS)	64
		1	ENTRAÎNEMENT DE VENTILATEUR (ASS)	65
		1	ENTRAÎNEMENT DE VENTILATEUR (ASS)	66
		1	ENTRAÎNEMENT DE VENTILATEUR (ASS)	75
	133-6445	1	JEU DE COURROIES TRAPEZOIDALES	109
	180-4526	1	ENTRAÎNEMENT DE VENTILATEUR (ASS)	70
		1	ENTRAÎNEMENT DE VENTILATEUR (ASS)	74
		1	ENTRAÎNEMENT DE VENTILATEUR (ASS)	76
PARE-POUSSIERE	6V-0852	1	BOUCHON - BLOC-CYLINDRES	101
RENIFLARD (ENS)	4N-4668	2	CACHE-SOUPAPES (ASS)	26
		3	CACHE-SOUPAPES (ASS)	27

PIÈCES DE RECHANGE

DESCRIPTION	NUMÉRO DE PIECÈS	QTÉ	DOMAINE D'APPLICATION	PAGE
POSTE DE CONDUITE				
AMPOULE (24 VOLTS)	7N-1996	2	TABLEAU DE BORD (ASS)	1352
AMPOULE (28 VOLTS)	7N-1996	2	TABLEAU DE BORD (ASS)	1350
BALAI D'ESSUIE-GLACE (ENS)	5C-8811	1	ESSUIE-GLACE (ASS)	1456
		1	ESSUIE-GLACE (ASS)	1460
	6V-5849	4	ESSUIE-GLACE (ASS)	1456
		4	ESSUIE-GLACE (ASS)	1460
	6V-5851	1	ESSUIE-GLACE (ASS)	1456
		1	ESSUIE-GLACE (ASS)	1460
BASE-TÉMOIN LUMINEUX	3T-0304	2	TABLEAU DE BORD (ASS)	1352
BOUCHON À ÉVENT	8E-8292	1	RÉSERVOIR - LAVE-GLACE (ASS)	1424
BOUTON	5M-8500	2	CABINE (ASS)	1235
CEINTURE DE SECURITE (ASS)	183-3648	1	SIÈGE (ASS)	1386
		1	SIÈGE (ASS)	1387
CEINTURE DE SECURITE (ASS) (RÉTRACTABLE)	8Y-3792	1	SIÈGE AVEC SUSPENSION (ASS)	1391
	122-4617	1	SIÈGE (ASS)	1380
		1	SIÈGE AVEC SUSPENSION (ASS)	1389
		1	SIÈGE AVEC SUSPENSION (ASS)	1392
	156-1148	1	SIÈGE (ASS)	1381
		1	SIÈGE AVEC SUSPENSION (ASS)	1393
CHAPEAU DE SOUPAPE DE CLIMATISEUR (FILET 7/16 X 20)	2L-1224	1	CONDENSEUR DE RÉFRIGÉRANT	1264
COURROIE TRAPEZOIDALE	2P-6532	1	COMPRESSEUR DE REFRIGERANT (ASS)	1244
		1	COMPRESSEUR DE REFRIGERANT (ASS)	1248
	2P-7333	1	COMPRESSEUR DE REFRIGERANT (ASS)	1242
DISJONCTEUR (ENS) (15A)	6N-8589	1	CONDENSATEUR ET MONTAGE (RÉFRIGÉRANT)	1252
	6T-3643	1	CONDENSATEUR ET MONTAGE (RÉFRIGÉRANT)	1257
		1	CONDENSATEUR ET MONTAGE (RÉFRIGÉRANT)	1260
FILTRE À AIR (CABINE)	7T-1890	1	CHAUFFAGE (ASS)	1280
		1	CHAUFFAGE (ASS)	1282
	107-0266	1	CHAUFFAGE (ASS)	1280
		1	CHAUFFAGE (ASS)	1282
LENTILLE ROUGE	6T-7058	2	TABLEAU DE BORD (ASS)	1350
		2	TABLEAU DE BORD (ASS)	1352

PIÈCES DE RECHANGE

DESCRIPTION	NUMÉRO DE PIECÈS	QTÉ	DOMAINE D'APPLICATION	PAGE
TRAIN DE ROULEMENT				
BOUCHON DE CONTROLE DE NIVEAU D'HUILE (ENS)	9W-8277	1	GRAISSAGE DE LA TRAVERSE-PIVOT	798
		1	GRAISSAGE DE LA TRAVERSE-PIVOT	800
BOUCHON DE GOULOTTE DE REMPLISSAGE D'HUILE MOTEUR	5L-2952	1	GRAISSAGE DE BALANCIER DE SUSPENSION (ASS)	796
BOUCHON DE VIDANGE	4T-2069	3	CARTER TELESCOPIQUE DE MECANISME AMORTISSEUR	768
		3	CARTER TELESCOPIQUE DE MECANISME AMORTISSEUR	770
		6	CARTER TELESCOPIQUE DE MECANISME AMORTISSEUR	772
		6	CARTER TELESCOPIQUE DE MECANISME AMORTISSEUR	774
		3	CARTER TELESCOPIQUE DE MECANISME AMORTISSEUR	776
		3	CARTER TELESCOPIQUE DE MECANISME AMORTISSEUR	778
		6	CARTER TELESCOPIQUE DE MECANISME AMORTISSEUR	780
GRAISSEUR	1K-6853	4	BALANCIER DE SUSPENSION (ASS)	746
	3B-8489	2	BALANCIER DE SUSPENSION (ASS)	746
		2	BALANCIER DE SUSPENSION (ASS)	748
		2	BALANCIER DE SUSPENSION (ASS)	752
		2	BALANCIER DE SUSPENSION (ASS)	757
		2	ROUE AV - CHAINES (ASS)	786
GRAISSEUR (FILET 1/8-27)	3B-8489	2	BALANCIER DE SUSPENSION (ASS)	754
		2	BALANCIER DE SUSPENSION (ASS)	759
		2	BALANCIER DE SUSPENSION (ASS)	760
		2	BALANCIER DE SUSPENSION (ASS)	761
RENIFLARD	198-7711	1	GRAISSAGE DE BALANCIER DE SUSPENSION (ASS)	796
TRANSMISSION				
BOUCHON AIMANTÉ	6V-3298	1	RÉDUCTEURS (ASS)	558
		1	RÉDUCTEURS (ASS)	562
		1	RÉDUCTEURS (ASS)	566
		1	RÉDUCTEURS (ASS)	570
		1	RÉDUCTEURS (ASS)	574
		1	RÉDUCTEURS (ASS)	578
		1	RÉDUCTEURS (ASS)	582
		1	RÉDUCTEURS (ASS)	586
		1	RÉDUCTEURS (ASS)	590
		1	RÉDUCTEURS (ASS)	594
BOUCHON DE GOULOTTE DE REMPLISSAGE (ENS)	6N-2985	1	CANALISATIONS D'HUILE DE TRANSMISSION (ASS)	602
		1	CANALISATIONS D'HUILE DE TRANSMISSION (ASS)	608
		1	CANALISATIONS D'HUILE DE TRANSMISSION (ASS)	614
		1	CANALISATIONS D'HUILE DE TRANSMISSION (ASS)	618
		1	CANALISATIONS D'HUILE DE TRANSMISSION (ASS)	622

PIÈCES DE RECHANGE

DESCRIPTION	NUMÉRO DE PIECÈS	QTÉ	DOMAINE D'APPLICATION	PAGE
BOUCHON FILETÉ	9S-4191	1	CONVERTISSEUR DE COUPLE (ASS)	646
		2	DISTRIBUTEUR (ASS)	654
		2	DISTRIBUTEUR (ASS)	656
		2	DISTRIBUTEUR (ASS)	658
		2	FILTRE A HUILE (ASS)	554
		2	FILTRE A HUILE (ASS)	556
		2	POMPE A ENGRENAGES (ASS)	636
BOULON (1-14X3,75 PO)	9S-1367	10	COURONNE ET ENGRENAGES DE TRANSFERT (ASS)	598
ÉLÉMENT DE FILTRE À HUILE (ENS)	132-8876	2	CANALISATIONS D'HUILE DE TRANSMISSION (ASS)	614
		2	CANALISATIONS D'HUILE DE TRANSMISSION (ASS)	618
		2	CANALISATIONS D'HUILE DE TRANSMISSION (ASS)	622
	132-8875	1	FILTRE A HUILE (ASS)	552
	132-8876	1	FILTRE A HUILE (ASS)	554
		1	FILTRE A HUILE (ASS)	556
FILTRE A HUILE MOTEUR (ENS)	1R-0716	2	FILTRE A HUILE (ASS)	550
GRAISSEUR (FILET 1/8-27)	3B-8489	1	RÉDUCTEURS (ASS)	582
JOINT TORIQUE	2S-4078	1	RÉDUCTEURS (ASS)	558
		1	RÉDUCTEURS (ASS)	562
		1	RÉDUCTEURS (ASS)	566
		1	RÉDUCTEURS (ASS)	570
		1	RÉDUCTEURS (ASS)	574
		1	RÉDUCTEURS (ASS)	578
		1	RÉDUCTEURS (ASS)	582
		1	RÉDUCTEURS (ASS)	586
		1	RÉDUCTEURS (ASS)	590
		1	RÉDUCTEURS (ASS)	594
	3J-1907	2	FILTRE A HUILE (ASS)	554
		2	FILTRE A HUILE (ASS)	556
PARE-POUSSIERE	6V-0852	2	CANALISATIONS D'HUILE DE TRANSMISSION (ASS)	602
		2	CANALISATIONS D'HUILE DE TRANSMISSION (ASS)	603
		2	CANALISATIONS D'HUILE DE TRANSMISSION (ASS)	608
		2	CANALISATIONS D'HUILE DE TRANSMISSION (ASS)	609
		4	CANALISATIONS D'HUILE DE TRANSMISSION (ASS)	614
		4	CANALISATIONS D'HUILE DE TRANSMISSION (ASS)	618
		4	CANALISATIONS D'HUILE DE TRANSMISSION (ASS)	622
		1	CLAPET DE DECHARGE (ASS)	666
		1	CLAPET DE DECHARGE (ASS)	668
		4	DISTRIBUTEUR DE BOITE (ASS)	673
		1	SOUPAPE PILOTE ET MONTAGE (ASS)	651
		2	TRAINS PLANÉTAIRES - CARTER ET PIÈCES	536
	8C-3445	1	FILTRE A HUILE (ASS)	550

PIÈCES DE RECHANGE

DESCRIPTION	NUMÉRO DE PIECÈS	QTÉ	DOMAINE D'APPLICATION	PAGE
	8C-3447	1	CANALISATIONS D'HUILE DE TRANSMISSION (ASS)	603
		1	CANALISATIONS D'HUILE DE TRANSMISSION (ASS)	609
		1	CANALISATIONS D'HUILE DE TRANSMISSION (ASS)	614
		1	CANALISATIONS D'HUILE DE TRANSMISSION (ASS)	618
		1	CANALISATIONS D'HUILE DE TRANSMISSION (ASS)	622
RENIFLARD	9G-5127	1	CANALISATIONS D'HUILE DE TRANSMISSION (ASS)	614
		1	CANALISATIONS D'HUILE DE TRANSMISSION (ASS)	618
		1	CANALISATIONS D'HUILE DE TRANSMISSION (ASS)	622
RENIFLARD (DÉCHARGE DE PRESSION)	9G-5127	1	CANALISATIONS D'HUILE DE TRANSMISSION (ASS)	603
		1	CANALISATIONS D'HUILE DE TRANSMISSION (ASS)	609
TAMIS D'ASPIRATION	3S-3875	1	CANALISATIONS D'HUILE DE TRANSMISSION (ASS)	602
		1	CANALISATIONS D'HUILE DE TRANSMISSION (ASS)	608
		1	CANALISATIONS D'HUILE DE TRANSMISSION (ASS)	614
		1	CANALISATIONS D'HUILE DE TRANSMISSION (ASS)	618
		1	CANALISATIONS D'HUILE DE TRANSMISSION (ASS)	622
	8S-9130	1	CONVERTISSEUR DE COUPLE (ASS)	646
		1	TRAINS PLANÉTAIRES - CARTER ET PIÈCES	536
VERSION DE MACHINE				
BATTERIE (12 VOLTS/SEC)	9X-9730	4	MACHINE - TEMPS FROID (VERSION)	2

PIEZAS DE MANTENIMIENTO

DESCRIPCION	NUMERO DE PIEZA	CANT	SE UTILIZA EN	PAGINA
BASTIDOR Y CAJA				
CANDADO (GR)	5P-8502	2	CAPO Y PROTECTOR (GR)	736
		3	COMPARTIMIENTO DEL MOTOR (GR)	694
		2	CONTENIDO DEL GRUPO DE GUARDABARROS	700
		2	CONTENIDO DEL GRUPO DE GUARDABARROS	704
		1	GUARDABARROS (GR)	708
TAPÓN	106-8187	1	CAJA Y BASTIDOR (GR)	678
		1	CAJA Y BASTIDOR (GR)	680
		1	CAJA Y BASTIDOR (GR)	682

PIEZAS DE MANTENIMIENTO

DESCRIPCION	NUMERO DE PIEZA	CANT	SE UTILIZA EN	PAGINA
CABINA DEL OPERADOR				
CINTURÓN DE SEGURIDAD (GR)	183-3648	1	ASIENTO (GR)	1386
		1	ASIENTO (GR)	1387
CINTURÓN DE SEGURIDAD (GR) (RETRACTIL)	8Y-3792	1	SUSPENSIÓN - ASIENTO CON (GR)	1391
	122-4617	1	ASIENTO (GR)	1380
		1	SUSPENSIÓN - ASIENTO CON (GR)	1389
		1	SUSPENSIÓN - ASIENTO CON (GR)	1392
	156-1148	1	ASIENTO (GR)	1381
		1	SUSPENSIÓN - ASIENTO CON (GR)	1393
CORREA TRAPEZOIDAL	2P-6532	1	COMPRESOR DE REFRIGERANTE (GR)	1244
		1	COMPRESOR DE REFRIGERANTE (GR)	1248
	2P-7333	1	COMPRESOR DE REFRIGERANTE (GR)	1242
DISYUNTOR (CONJ) (15 A)	6N-8589	1	CONDENSADOR DEL REFRIGERANTE Y MONTAJE (GR)	1252
	6T-3643	1	CONDENSADOR DEL REFRIGERANTE Y MONTAJE (GR)	1257
		1	CONDENSADOR DEL REFRIGERANTE Y MONTAJE (GR)	1260
FILTRO DE AIRE (CABINA)	7T-1890	1	CALEFACCIÓN (GR)	1280
		1	CALEFACCIÓN (GR)	1282
	107-0266	1	CALEFACCIÓN (GR)	1280
		1	CALEFACCIÓN (GR)	1282
HOJA DE LIMPIAPARABRISAS (CONJ)	5C-8811	1	LIMPIAPARABRISAS DE LA VENTANA (GR)	1456
		1	LIMPIAPARABRISAS DE LA VENTANA (GR)	1460
	6V-5849	4	LIMPIAPARABRISAS DE LA VENTANA (GR)	1456
		4	LIMPIAPARABRISAS DE LA VENTANA (GR)	1460
	6V-5851	1	LIMPIAPARABRISAS DE LA VENTANA (GR)	1456
		1	LIMPIAPARABRISAS DE LA VENTANA (GR)	1460
LÁMPARA (24 VOLTIOS)	7N-1996	2	TABLERO DE INSTRUMENTOS (GR)	1352
LÁMPARA (28 VOLTIOS)	7N-1996	2	TABLERO DE INSTRUMENTOS (GR)	1350
LENTE-ROJO	6T-7058	2	TABLERO DE INSTRUMENTOS (GR)	1350
		2	TABLERO DE INSTRUMENTOS (GR)	1352
LUCES DE SEÑALES-BASE	3T-0304	2	TABLERO DE INSTRUMENTOS (GR)	1352
PERILLA	5M-8500	2	CABINA (GR)	1235
TAPA CON RESPIRADERO	8E-8292	1	TANQUE DEL LAVAPARABRISAS (GR)	1424
TAPA DE VÁLVULA DEL ACONDICIONADOR DE AIRE (ROSCA 7/16 X 20)	2L-1224	1	CONDENSADOR DE REFRIGERANTE (GR)	1264
CONFIGURACIÓN DE MÁQUINA				
BATERÍA (12 VOLTIOS/SECO)	9X-9730	4	CONFIGURACIÓN DE MÁQUINA PARA CLIMAS FRÍOS	2

PIEZAS DE MANTENIMIENTO

DESCRIPCION	NUMERO DE PIEZA	CANT	SE UTILIZA EN	PAGINA
IMPLEMENTOS				
CONEXIÓN DE ENGRASE	3B-8489	2	BASTIDOR DEL DESGARRADOR (GR)	1090
		2	BASTIDOR DEL DESGARRADOR (GR)	1092
		2	BASTIDOR DEL DESGARRADOR (GR)	1094
		2	BASTIDOR DEL DESGARRADOR (GR)	1096
		2	BASTIDOR DEL DESGARRADOR (GR)	1098
		6	GUIACABLE DEL MALACATE (GR)	1089
		2	JUEGO DE TORNILLERÍA, JUNTAS Y CALCES	1103
		2	JUEGO DE TORNILLERÍA, JUNTAS Y CALCES	1104
		2	MONTAJE DE CILINDRO (GR)	1114
CONEXIÓN DE ENGRASE (ROSCA DE 1/8-27)	3B-8489	1	SOPORTE DE LA HOJA TOPADORA	1064
ELEMENTO DE FILTRO	2P-5834	1	CONTROL DEL MALACATE (GR)	1086
FILTRO MAGNÉTICO	8S-9129	1	REJILLA MAGNÉTICA (GR)	1136
REJILLA DE SUCCIÓN	8S-9130	1	REJILLA MAGNÉTICA (GR)	1136
RESPIRADERO	2Y-7359	1	CAJA DEL CABRESTANTE (GR)	1070
	9G-5127	1	INSTALACIÓN DEL MALACATE (CONFIG)	1102
TAPÓN DE DRENAJE	5H-7110	1	CAJA DEL CABRESTANTE (GR)	1070
MOTOR BÁSICO				
CONEXIÓN DE ENGRASE	3B-8485	1	AJUSTADOR DE CORREA (GR)	18
		1	IMPULSOR DE VENTILADOR (GR)	70
		1	IMPULSOR DE VENTILADOR (GR)	76
CORREA TRAPEZOIDAL	133-6443	1	JUEGO DE CORREAS TRAPEZOIDALES	109
JUEGO DE CORREAS TRAPEZOIDALES (INCLUYE 4 CORREAS)	123-5889	1	IMPULSOR DE VENTILADOR (GR)	57
		1	IMPULSOR DE VENTILADOR (GR)	58
		1	IMPULSOR DE VENTILADOR (GR)	59
		1	IMPULSOR DE VENTILADOR (GR)	62
		1	IMPULSOR DE VENTILADOR (GR)	63
		1	IMPULSOR DE VENTILADOR (GR)	64
		1	IMPULSOR DE VENTILADOR (GR)	65
		1	IMPULSOR DE VENTILADOR (GR)	66
		1	IMPULSOR DE VENTILADOR (GR)	75
	133-6445	1	JUEGO DE CORREAS TRAPEZOIDALES	109
	180-4526	1	IMPULSOR DE VENTILADOR (GR)	70
		1	IMPULSOR DE VENTILADOR (GR)	74
		1	IMPULSOR DE VENTILADOR (GR)	76
RESPIRADERO (CONJ)	4N-4668	2	TAPA DEL MECANISMO DE VÁLVULAS (GR)	26
		3	TAPA DEL MECANISMO DE VÁLVULAS (GR)	27
TAPA CONTRA EL POLVO	6V-0852	1	TAPÓN DEL BLOQUE MOTOR (GR)	101
TAPÓN	9S-4190	1	IMPULSOR DE VENTILADOR (GR)	74
TAPÓN DE DRENAJE	5F-0304	1	VOLANTE - CAJA DE (GR)	90
TAPON DE DRENAJE DE ACEITE	4P-0513	1	CÁRTER - COLECTOR DEL (GR)	96
TAPÓN (ROSCA 7/16-20)	9S-4190	5	TAPÓN DEL BLOQUE MOTOR (GR)	101

PIEZAS DE MANTENIMIENTO

DESCRIPCION	NUMERO DE PIEZA	CANT	SE UTILIZA EN	PAGINA
SISTEMA DE ADMISIÓN Y ESCAPE DE AIRE				
ELEMENTO DE FILTRO	7M-1674	1	AIRE - TUBERÍAS DE (GR)	202
		1	AIRE - TUBERÍAS DE (GR)	203
ELEMENTO PRIMARIO (CONJ)	106-3969	1	FILTRO DE AIRE (GR)	196
ELEMENTO SECUNDARIO (CONJ)	106-3973	1	FILTRO DE AIRE (GR)	196
TAPA CONTRA LA LLUVIA (CONJ)	7S-5003	1	EXPULSOR DE POLVO (GR)	197
SISTEMA DE COMBUSTIBLE				
ABERTURA DE DESCARGA (CONJ)	6G-7803	1	ADAPTADOR DE LLENADO RÁPIDO DE COMBUSTIBLE (GR)	216
CANDADO (GR)	5P-8502	1	ADAPTADOR DE LLENADO RÁPIDO DE COMBUSTIBLE (GR)	218
		1	COMBUSTIBLE - TANQUE DE (GR)	308
		1	FILTRO DE COMBUSTIBLE (GR)	248
		1	FILTRO DE COMBUSTIBLE (GR)	250
		1	COMBUSTIBLE - TANQUE DE (GR)	312
		1	TUBERÍAS DE COMBUSTIBLE (GR)	262
CARTUCHO, FILTRO	1Q-2541	1	COMBUSTIBLE - TANQUE DE (GR)	310
COLADOR DE COMBUSTIBLE	9P-7121	1	COMBUSTIBLE - TANQUE DE (GR)	308
COLADOR DEL TANQUE DE COMBUSTIBLE	9P-7121	1	COMBUSTIBLE - TANQUE DE (GR)	312
ELEMENTO DE FILTRO	129-0373	1	BOMBA DE CEBADO Y FILTRO PRIMARIO DE COMBUSTIBLE (GR)	292
		1	FILTRO DE COMBUSTIBLE Y SEPARADOR DE AGUA (GR)	252
		1	FILTRO Y TUBERÍAS DE COMBUSTIBLE (GR)	246
EMPAQUETADURA (BOMBA DE CEBADO DE COMBUSTIBLE)	1P-0436	1	BOMBA DE CEBADO DE COMBUSTIBLE (GR)	291
		1	BOMBA DE CEBADO Y FILTRO PRIMARIO DE COMBUSTIBLE (GR)	292
		1	FILTRO Y TUBERÍAS DE COMBUSTIBLE (GR)	246
FILTRO (BOMBA HIDRAULICA DE LA UNIDAD DEL INYECTOR)	125-5835	1	MANDO DE BOMBA HIDRÁULICA INYECTORA (GR)	234
		1	MANDO DE BOMBA HIDRÁULICA INYECTORA (GR)	242
		1	MANDO DE BOMBA HIDRÁULICA INYECTORA (GR)	244
FILTRO (CONJ)	1Q-3363	1	COMBUSTIBLE - TANQUE DE (GR)	310
FILTRO (CONJ) (SEPARADOR DE AGUA Y COMBUSTIBLE)	1R-0769	1	FILTRO DE COMBUSTIBLE Y SEPARADOR DE AGUA (GR)	253
FILTRO DE COMBUSTIBLE (CONJ)	1R-0749	2	TUBERÍAS DEL FILTRO DE COMBUSTIBLE	264
FILTRO DE COMBUSTIBLE Y SEPARADOR DE AGUA (CONJ)	129-0372	1	BOMBA DE CEBADO Y FILTRO PRIMARIO DE COMBUSTIBLE (GR)	292
		1	FILTRO Y TUBERÍAS DE COMBUSTIBLE (GR)	246
FILTRO DE COMBUSTIBLE Y SEPARADOR DE AGUA (CONJ) (PRIMARIO)	129-0372	1	FILTRO DE COMBUSTIBLE Y SEPARADOR DE AGUA (GR)	252
INDICADOR Y TAPA (CONJ)	1Q-3828	1	COMBUSTIBLE - TANQUE DE (GR)	310
LLAVE	5P-8500	1	COMBUSTIBLE - TANQUE DE (GR)	308
		1	COMBUSTIBLE - TANQUE DE (GR)	312

PIEZAS DE MANTENIMIENTO

DESCRIPCION	NUMERO DE PIEZA	CANT	SE UTILIZA EN	PAGINA
REJILLA DEL TANQUE DE COMBUSTIBLE	6T-7774	1	FILTRO DE COMBUSTIBLE (GR)	250
		1	TUBERÍAS DE COMBUSTIBLE (GR)	262
SELLO ANULAR (DI DE 110,49 MM)	9X-8600	1	COMBUSTIBLE - TANQUE DE (GR)	308
TAPA CONTRA EL POLVO	9D-0630	1	ADAPTADOR DE LLENADO RÁPIDO DE COMBUSTIBLE (GR)	216
		1	ADAPTADOR DE LLENADO RÁPIDO DE COMBUSTIBLE (GR)	218
		1	ADAPTADOR DE LLENADO RÁPIDO DE COMBUSTIBLE (GR)	220
		1	ADAPTADOR DE LLENADO RÁPIDO DE COMBUSTIBLE (GR)	222
		1	ADAPTADOR DE LLENADO RÁPIDO DE COMBUSTIBLE (GR)	224
		1	ADAPTADOR DE LLENADO RÁPIDO DE COMBUSTIBLE (GR)	226
TAPA DEL TANQUE DE COMBUSTIBLE (CONJ)	7X-7700	1	COMBUSTIBLE - TANQUE DE (GR)	313
		1	COMBUSTIBLE - TANQUE DE (GR)	308
TAPA DEL TUBO DE LLENADO DEL TANQUE DE COMBUSTIBLE (CONJ)	101-8909	1	ADAPTADOR DE LLENADO RÁPIDO DE COMBUSTIBLE (GR)	216
		1	ADAPTADOR DE LLENADO RÁPIDO DE COMBUSTIBLE (GR)	218
TAPÓN (CONJ)	6V-9830	1	FILTRO DE COMBUSTIBLE (GR)	248
		1	FILTRO DE COMBUSTIBLE (GR)	250
TAPÓN (CONJ) (ROSCA 13/16-16)	6V-9830	1	FILTRO Y TUBERÍAS DE COMBUSTIBLE (GR)	246

PIEZAS DE MANTENIMIENTO

DESCRIPCION	NUMERO DE PIEZA	CANT	SE UTILIZA EN	PAGINA
SISTEMA DE ENFRIAMIENTO				
CORREA TRAPEZOIDAL	135-8654	1	PASO VARIABLE DEL VENTILADOR (GR)	152
		1	PASO VARIABLE DEL VENTILADOR (GR)	154
DISYUNTOR (CONJ) (15 A)	6T-3643	1	PASO VARIABLE DEL VENTILADOR (GR)	152
ELEMENTO ACONDICIONADOR DE REFRIGERANTE (CONJ)	9Y-1022	1	ACONDICIONADOR DE REFRIGERANTE (GR)	143
FILTRO (BOMBA DE AGUA)	111-2721	1	BOMBA DE AGUA (GR)	172
		1	BOMBA DE AGUA (GR)	174
		1	BOMBA DE AGUA (GR)	176
FUSIBLE (1/4 A)	137-2082	1	PASO VARIABLE DEL VENTILADOR (GR)	152
		1	PASO VARIABLE DEL VENTILADOR (GR)	154
FUSIBLE (15 A)	8M-8948	1	PASO VARIABLE DEL VENTILADOR (GR)	152
		1	PASO VARIABLE DEL VENTILADOR (GR)	154
REGULADOR DE TEMPERATURA DEL AGUA	7C-3095	2	TUBERÍAS DEL AGUA (GR)	166
REGULADOR DE TEMPERATURA DEL AGUA (92 GR C)	4W-4794	2	TUBERÍAS DEL AGUA (GR)	158
		2	TUBERÍAS DEL AGUA (GR)	162
SELLO DE LABIO	3S-9643	1	TUBERÍAS DEL AGUA (GR)	158
		1	TUBERÍAS DEL AGUA (GR)	162
		1	TUBERÍAS DEL AGUA (GR)	166
TAPA DE RADIADOR (CONJ)	031-1119	1	TANQUE DE REFRIGERANTE (GR)	183
		1	TANQUE DEL AGUA (GR)	184
		1	TANQUE DEL AGUA (GR)	188
TAPÓN DE DRENAJE	7N-1447	1	RADIADOR (GR)	180
SISTEMA DE FRENOS Y DIRECCIÓN				
TAPA CONTRA EL POLVO	6V-0852	4	VÁLVULA DE DIRECCIÓN Y MONTAJE (GR)	877
SISTEMA DE LUBRICACIÓN				
REJILLA ACAMPANADA (CONJ)	4N-0913	1	TUBERÍAS DE ACEITE DEL MOTOR (GR)	120
TAPA	110-8318	1	CAMBIO RÁPIDO DE ACEITE (GR)	132
TAPA CONTRA EL POLVO	6V-0852	1	TUBERIAS DE ACEITE (GR)	126
TAPA DE LLENADO (CONJ)	6N-2206	1	TUBO DE LLENADO DE ACEITE (GR)	114
SISTEMA ELÉCTRICO Y DE ARRANQUE				
BATERÍA (12 VOLTIOS)	9X-9730	2	ARRANQUE EN TIEMPO FRIO (CONFIG)	476
		2	ARRANQUE EN TIEMPO FRIO (CONFIG)	480
		2	BATERÍA Y CABLES (GR)	328
		2	BATERÍA Y CABLES (GR)	336
		2	BATERÍA Y CABLES (GR)	344
		2	BATERÍA Y CABLES (GR)	354
		2	BATERÍA Y CABLES (GR)	362

PIEZAS DE MANTENIMIENTO

DESCRIPCION	NUMERO DE PIEZA	CANT	SE UTILIZA EN	PAGINA
		2	BATERÍA Y CABLES (GR)	370
CANDADO (GR)	5P-8502	1	ARRANQUE EN TIEMPO FRIO (CONFIG)	477
		1	ARRANQUE EN TIEMPO FRIO (CONFIG)	481
CORREA TRAPEZOIDAL	4N-2531	1	CARGA - ALTERNADOR DE (GR)	318
	6N-6657	1	CARGA - ALTERNADOR DE (GR)	324
	9L-6645	1	CARGA - ALTERNADOR DE (GR)	326
CRISTAL (LUZ DE TECHO)	7T-0020	1	LÁMPARA DEL TECHO (GR)	414
DISYUNTOR (CONJ) (10 A)	9G-9487	3	CABLES DE LA CONSOLA (GR)	506
		1	CABLES DE LA CONSOLA (GR)	512
		1	CABLES DE LA CONSOLA (GR)	516
DISYUNTOR (CONJ) (10 A) (ARRANQUE DEL MOTOR)	9G-9487	1	CABLES DE LA CONSOLA (GR)	509
		1	CABLES DE LA CONSOLA (GR)	512
		1	CABLES DE LA CONSOLA (GR)	516
DISYUNTOR (CONJ) (10 A) (AUXILIAR)	9G-9487	1	CABLES DE LA CONSOLA (GR)	509
DISYUNTOR (CONJ) (10 A) (LLAVE)	9G-9487	1	CABLES DE LA CONSOLA (GR)	508
DISYUNTOR (CONJ) (105 AMP)	3E-7294	2	CABLES DE LA CONSOLA (GR)	506
DISYUNTOR (CONJ) (105 AMP) (ALTERNADOR)	3E-7294	1	CABLES DE LA CONSOLA (GR)	508
		1	CABLES DE LA CONSOLA (GR)	512
		1	CABLES DE LA CONSOLA (GR)	516
DISYUNTOR (CONJ) (105 AMP) (PRINCIPAL)	3E-7294	1	CABLES DE LA CONSOLA (GR)	508
		1	CABLES DE LA CONSOLA (GR)	512
		1	CABLES DE LA CONSOLA (GR)	516
DISYUNTOR (CONJ) (15 A)	3T-2662	1	CABLES DE LA CONSOLA (GR)	506
	6N-8589	3	CABLES DE LA CONSOLA (GR)	506
		1	CABLES DE LA CONSOLA (GR)	512
		1	CABLES DE LA CONSOLA (GR)	516
DISYUNTOR (CONJ) (15 A) (FARO DELANTERO)	3T-2662	1	CABLES DE LA CONSOLA (GR)	512
		1	CABLES DE LA CONSOLA (GR)	516
DISYUNTOR (CONJ) (15 A) (LÁMPARA DE FARO DELANTERO)	3T-2662	1	CABLES DE LA CONSOLA (GR)	508
DISYUNTOR (CONJ) (15 A) (MOTOR)	6N-8589	1	CABLES DE LA CONSOLA (GR)	508
		1	CABLES DE LA CONSOLA (GR)	512
		1	CABLES DE LA CONSOLA (GR)	516
DISYUNTOR (CONJ) (15 A) (TOMACORRIENTE)	6N-8589	1	CABLES DE LA CONSOLA (GR)	509
		1	CABLES DE LA CONSOLA (GR)	512
		1	CABLES DE LA CONSOLA (GR)	516
DISYUNTOR (CONJ) (15 A) (VENTILADOR DEL MOTOR)	6N-8589	1	CABLES DE LA CONSOLA (GR)	512
		1	CABLES DE LA CONSOLA (GR)	516
DISYUNTOR (CONJ) (15 A) (VENTILADOR SOPLADOR)	6N-8589	1	CABLES DE LA CONSOLA (GR)	509
ELEMENTO DEL CALENTADOR DEL AGUA DE LAS CAMISAS	6T-3764	2	AGUA DE LAS CAMISAS - CALENTADOR DEL (GR)	412
	9G-6655	2	AGUA DE LAS CAMISAS - CALENTADOR DEL (GR)	411

PIEZAS DE MANTENIMIENTO

DESCRIPCION	NUMERO DE PIEZA	CANT	SE UTILIZA EN	PAGINA
ELEMENTO DEL CALENTADOR DEL AGUA DE LAS CAMISAS (120 VOLTIOS/1500 VATIOS)	9G-6655	2	AGUA DE LAS CAMISAS - CALENTADOR DEL (GR)	410
ESCOBILLA (CONJ)	3T-9524	6	MOTOR DE ARRANQUE ELÉCTRICO (GR)	494
ESCOBILLA (CONJ) (MOTOR DE ARRANQUE)	3T-9524	6	MOTOR DE ARRANQUE ELÉCTRICO (GR)	484
FILTRO ESPONJOSO	111-4402	1	BATERÍA Y CABLES (GR)	330
		1	BATERÍA Y CABLES (GR)	337
		1	BATERÍA Y CABLES (GR)	345
		1	BATERÍA Y CABLES (GR)	354
		1	BATERÍA Y CABLES (GR)	362
		1	BATERÍA Y CABLES (GR)	370
FUSIBLE	123-0932	1	CALENTADOR DEL REFRIGERANTE (GR)	398
FUSIBLE (10 A)	3K-8782	7	CABLES DE LA CONSOLA (GR)	506
		7	CABLES DE LA CONSOLA (GR)	508
		10	CABLES DE LA CONSOLA (GR)	513
		10	CABLES DE LA CONSOLA (GR)	517
FUSIBLE (15 A)	8M-8948	1	CABLES DE LA CONSOLA (GR)	506
		1	CABLES DE LA CONSOLA (GR)	508
		2	CABLES DE LA CONSOLA (GR)	513
		2	CABLES DE LA CONSOLA (GR)	517
FUSIBLE (20 A)	8M-0456	2	CABLES DE LA CONSOLA (GR)	506
		2	CABLES DE LA CONSOLA (GR)	508
		2	CABLES DE LA CONSOLA (GR)	512
		2	CABLES DE LA CONSOLA (GR)	516
JUEGO DE TERMINAL	3N-3763	1	MOTOR DE ARRANQUE ELÉCTRICO (GR)	495
JUEGO DE TERMINAL (MOTOR DE ARRANQUE)	3N-3763	1	MOTOR DE ARRANQUE ELÉCTRICO (GR)	485
LÁMPARA DE FARO DELANTERO (24 VOLTIOS) (REFLECTOR)	9X-3463	1	REFLECTOR (GR)	418
		1	REFLECTOR (GR)	419
LÁMPARA (24 VOLTIOS)	3E-8825	2	CABLES DE LA PLATAFORMA (GR)	522
		2	CABLES DE LA PLATAFORMA (GR)	526
	7N-5876	4	CABLES DE LA PLATAFORMA (GR)	522
		4	CABLES DE LA PLATAFORMA (GR)	526
LÁMPARA (24 VOLTIOS) (CÚPULA)	7N-9943	1	LÁMPARA DEL TECHO (GR)	414
LÁMPARA (24 VOLTIOS) (REFLECTOR)	9X-3463	1	REFLECTOR (GR)	415
LÁMPARA (24 VOLTIOS) (65 VATIOS)	9X-3463	1	REFLECTOR (GR)	416
LÁMPARA (24 VOLTIOS)(65 VATIOS)	9X-3463	1	REFLECTOR (GR)	417
LLAVE (DESCONECTAR BATERIA)	8H-5306	1	DISYUNTOR (GR)	499
PORTAESCOBILLAS (CONJ)	6T-0363	6	MOTOR DE ARRANQUE ELÉCTRICO (GR)	495
PORTAESCOBILLAS (CONJ) (ESCOBILLAS DEL MOTOR DE ARRANQUE)	6T-0363	6	MOTOR DE ARRANQUE ELÉCTRICO (GR)	484
RESORTE	3T-9494	6	MOTOR DE ARRANQUE ELÉCTRICO (GR)	495
	9M-7609	1	MOTOR DE ARRANQUE ELÉCTRICO (GR)	494
RESORTE (ESCOBILLAS DEL MOTOR DE ARRANQUE)	3T-9494	1	MOTOR DE ARRANQUE ELÉCTRICO (GR)	484

PIEZAS DE MANTENIMIENTO

DESCRIPCION	NUMERO DE PIEZA	CANT	SE UTILIZA EN	PAGINA
		6	MOTOR DE ARRANQUE ELÉCTRICO (GR)	485
TAPA CONTRA EL POLVO (CONJ)	6N-1604	2	AGUA DE LAS CAMISAS - CALENTADOR DEL (GR)	410
TAPA DE CONECTOR	9G-4360	1	CABLES DE LA CONSOLA (GR)	506
		1	CABLES DE LA CONSOLA (GR)	508
TAPA DE PORTAFUSIBLES	7N-2867	1	CABLES DE LA CONSOLA (GR)	506
	139-0178	1	CABLES DE LA CONSOLA (GR)	508
		1	CABLES DE LA CONSOLA (GR)	512
		1	CABLES DE LA CONSOLA (GR)	516
TAPA DEL RECEPTACULO	8C-6354	1	CABLES DE LA CONSOLA (GR)	506
		1	CABLES DE LA CONSOLA (GR)	508
		1	CABLES DE LA CONSOLA (GR)	512
		1	CABLES DE LA CONSOLA (GR)	516
TAPON DE TUBO	8T-6761	1	CALENTADOR DEL REFRIGERANTE (GR)	399
VIDRIO (CONJ) (REFLECTOR)	107-5853	1	REFLECTOR (GR)	415
		1	REFLECTOR (GR)	416
	158-0248	1	REFLECTOR (GR)	418
		1	REFLECTOR (GR)	419
VIDRIO DE LOS FAROLES (CONJ)	107-5853	1	REFLECTOR (GR)	417

PIEZAS DE MANTENIMIENTO

DESCRIPCION	NUMERO DE PIEZA	CANT	SE UTILIZA EN	PAGINA
SISTEMA HIDRÁULICO				
CANDADO (GR)	5P-8502	1	TAPA DEL TAPÓN DEL TANQUE HIDRÁULICO (GR)	896
COLADOR (CONJ)	5D-7927	1	TANQUE Y FILTRO HIDRÁULICOS (GR)	998
CONEXIÓN DE ENGRASE	3B-8489	1	CILINDRO DE DOBLE INCLINACIÓN (GR)	908
		1	CILINDRO DE DOBLE INCLINACIÓN (GR)	910
		1	CILINDRO DE INCLINACIÓN DE LA HOJA TOPADORA (GR)	902
		1	CILINDRO DE INCLINACIÓN DE LA HOJA TOPADORA (GR)	904
		1	CILINDRO DE INCLINACIÓN DE LA HOJA TOPADORA (GR)	906
		2	CILINDRO DE INCLINACIÓN DEL DESGARRADOR (GR)	930
		2	CILINDRO DE LEVANTAMIENTO DEL DESGARRADOR (GR)	912
		2	CILINDRO DE LEVANTAMIENTO DEL DESGARRADOR (GR)	914
		2	CILINDRO DE LEVANTAMIENTO DEL DESGARRADOR (GR)	916
		2	CILINDRO DE LEVANTAMIENTO DEL DESGARRADOR (GR)	918
		2	CILINDRO DE LEVANTAMIENTO DEL DESGARRADOR (GR)	920
CONEXIÓN DE ENGRASE (ROSCA DE 1/8-27)	3B-8489	2	CILINDRO DE LEVANTAMIENTO DEL DESGARRADOR (GR)	922
ELEMENTO DE FILTRO DE ACEITE (CONJ) (HIDRAULICO/FLUJO INVERSO) (DESECHABLE)	1R-0735	2	TANQUE Y FILTRO HIDRÁULICOS (GR)	998
ELEMENTO DE FILTRO (FLUÍDO RESISTENTE AL FUEGO)	1U-2092	2	TANQUE Y FILTRO HIDRÁULICOS (GR)	998
PANTALLA (CONJ)	9T-7571	1	TANQUE Y FILTRO HIDRÁULICOS (GR)	998
SELLO ANULAR	2S-4078	1	BOMBA - TUBERÍAS DE (GR)	942
		1	BOMBA - TUBERÍAS DE (GR)	943
		1	BOMBA - TUBERÍAS DE (GR)	949
		2	BOMBA - TUBERÍAS DE (GR)	956
		1	BOMBA - TUBERÍAS DE (GR)	958
		1	VÁLVULA DE CONTROL (GR)	1026
TAPA CONTRA EL POLVO	6V-0852	2	BOMBA - TUBERÍAS DE (GR)	943
		2	BOMBA - TUBERÍAS DE (GR)	948
		2	BOMBA - TUBERÍAS DE (GR)	956
		1	PRESIÓN - VÁLVULA DE CONTROL DE (GR)	1040
	8C-3451	1	TANQUE Y FILTRO HIDRÁULICOS (GR)	998
TAPA DEL TUBO DE LLENADO (HIDRÁULICO)	7H-1447	1	TANQUE Y FILTRO HIDRÁULICOS (GR)	998
TREN DE FUERZA				
CONEXIÓN DE ENGRASE (ROSCA DE 1/8-27)	3B-8489	1	MANDO final (GR)	582

PIEZAS DE MANTENIMIENTO

DESCRIPCION	NUMERO DE PIEZA	CANT	SE UTILIZA EN	PAGINA
ELEMENTO DE FILTRO DE ACEITE (CONJ)	132-8875	1	FILTRO DE ACEITE (GR)	552
	132-8876	1	FILTRO DE ACEITE (GR)	554
		1	FILTRO DE ACEITE (GR)	556
		2	TUBERÍAS DE ACEITE DEL TREN DE FUERZA (GR)	614
		2	TUBERÍAS DE ACEITE DEL TREN DE FUERZA (GR)	618
		2	TUBERÍAS DE ACEITE DEL TREN DE FUERZA (GR)	622
FILTRO DE ACEITE DEL MOTOR (CONJ)	1R-0716	2	FILTRO DE ACEITE (GR)	550
PERNO (1-14X3,75 PULGADAS)	9S-1367	10	ENGRANAJE DE TRANSFERENCIA Y CORONA (GR)	598
REJILLA DE SUCCIÓN	3S-3875	1	TUBERÍAS DE ACEITE DEL TREN DE FUERZA (GR)	602
		1	TUBERÍAS DE ACEITE DEL TREN DE FUERZA (GR)	608
		1	TUBERÍAS DE ACEITE DEL TREN DE FUERZA (GR)	614
		1	TUBERÍAS DE ACEITE DEL TREN DE FUERZA (GR)	618
		1	TUBERÍAS DE ACEITE DEL TREN DE FUERZA (GR)	622
	8S-9130	1	CAJA Y PIEZAS DE LOS PLANETARIOS	536
		1	CONVERTIDOR DE PAR (GR)	646
RESPIRADERO	9G-5127	1	TUBERÍAS DE ACEITE DEL TREN DE FUERZA (GR)	614
		1	TUBERÍAS DE ACEITE DEL TREN DE FUERZA (GR)	618
		1	TUBERÍAS DE ACEITE DEL TREN DE FUERZA (GR)	622
RESPIRADERO (ALIVIO DE PRESIÓN)	9G-5127	1	TUBERÍAS DE ACEITE DEL TREN DE FUERZA (GR)	603
		1	TUBERÍAS DE ACEITE DEL TREN DE FUERZA (GR)	609
SELLO ANULAR	2S-4078	1	MANDO final (GR)	558
		1	MANDO final (GR)	562
		1	MANDO final (GR)	566
		1	MANDO final (GR)	570
		1	MANDO final (GR)	574
		1	MANDO final (GR)	578
		1	MANDO final (GR)	582
		1	MANDO final (GR)	586
		1	MANDO final (GR)	590
		1	MANDO final (GR)	594
	3J-1907	2	FILTRO DE ACEITE (GR)	554
		2	FILTRO DE ACEITE (GR)	556
TAPA CONTRA EL POLVO	6V-0852	2	CAJA Y PIEZAS DE LOS PLANETARIOS	536
		2	TUBERÍAS DE ACEITE DEL TREN DE FUERZA (GR)	602
		2	TUBERÍAS DE ACEITE DEL TREN DE FUERZA (GR)	603

PIEZAS DE MANTENIMIENTO

DESCRIPCION	NUMERO DE PIEZA	CANT	SE UTILIZA EN	PAGINA
		2	TUBERÍAS DE ACEITE DEL TREN DE FUERZA (GR)	608
		2	TUBERÍAS DE ACEITE DEL TREN DE FUERZA (GR)	609
		4	TUBERÍAS DE ACEITE DEL TREN DE FUERZA (GR)	614
		4	TUBERÍAS DE ACEITE DEL TREN DE FUERZA (GR)	618
		4	TUBERÍAS DE ACEITE DEL TREN DE FUERZA (GR)	622
		1	VÁLVULA DE ALIVIO (GR)	666
		1	VÁLVULA DE ALIVIO (GR)	668
		4	VÁLVULA DE CONTROL DE LA TRANSMISIÓN (GR)	673
		1	VALVULA PILOTO Y MONTAJE (GR)	651
	8C-3445	1	FILTRO DE ACEITE (GR)	550
	8C-3447	1	TUBERÍAS DE ACEITE DEL TREN DE FUERZA (GR)	603
		1	TUBERÍAS DE ACEITE DEL TREN DE FUERZA (GR)	609
		1	TUBERÍAS DE ACEITE DEL TREN DE FUERZA (GR)	614
		1	TUBERÍAS DE ACEITE DEL TREN DE FUERZA (GR)	618
		1	TUBERÍAS DE ACEITE DEL TREN DE FUERZA (GR)	622
TAPA DE LLENADO (CONJ)	6N-2985	1	TUBERÍAS DE ACEITE DEL TREN DE FUERZA (GR)	602
		1	TUBERÍAS DE ACEITE DEL TREN DE FUERZA (GR)	608
		1	TUBERÍAS DE ACEITE DEL TREN DE FUERZA (GR)	614
		1	TUBERÍAS DE ACEITE DEL TREN DE FUERZA (GR)	618
		1	TUBERÍAS DE ACEITE DEL TREN DE FUERZA (GR)	622
TAPÓN	9S-4191	2	BOMBA DE ENGRANAJES (GR)	636
		1	CONVERTIDOR DE PAR (GR)	646
		2	FILTRO DE ACEITE (GR)	554
		2	FILTRO DE ACEITE (GR)	556
		2	VÁLVULA DE CONTROL (GR)	654
		2	VÁLVULA DE CONTROL (GR)	656
		2	VÁLVULA DE CONTROL (GR)	658
TAPÓN MAGNÉTICO	6V-3298	1	MANDO final (GR)	558
		1	MANDO final (GR)	562
		1	MANDO final (GR)	566
		1	MANDO final (GR)	570
		1	MANDO final (GR)	574
		1	MANDO final (GR)	578
		1	MANDO final (GR)	582
		1	MANDO final (GR)	586
		1	MANDO final (GR)	590
		1	MANDO final (GR)	594

PIEZAS DE MANTENIMIENTO

DESCRIPCION	NUMERO DE PIEZA	CANT	SE UTILIZA EN	PAGINA
TREN DE RODAJE				
CONEXIÓN	1K-6853	4	BARRA COMPENSADORA (GR)	746
CONEXIÓN DE ENGRASE	3B-8489	2	BARRA COMPENSADORA (GR)	746
		2	BARRA COMPENSADORA (GR)	748
		2	BARRA COMPENSADORA (GR)	752
		2	BARRA COMPENSADORA (GR)	757
		2	RUEDA GUÍA DE CADENA (GR)	786
CONEXIÓN DE ENGRASE (ROSCA DE 1/8-27)	3B-8489	2	BARRA COMPENSADORA (GR)	754
		2	BARRA COMPENSADORA (GR)	759
		2	BARRA COMPENSADORA (GR)	760
		2	BARRA COMPENSADORA (GR)	761
RESPIRADERO	198-7711	1	GRUPO DE LUBRICACIÓN DE BARRA ESTABILIZADORA	796
TAPA DE NIVEL DE ACEITE (CONJ)	9W-8277	1	LUBRICACIÓN DE EJE PIVOTE (GR)	798
		1	LUBRICACIÓN DE EJE PIVOTE (GR)	800
TAPA DEL TUBO DE LLENADO DE ACEITE (CONJ)	5L-2952	1	GRUPO DE LUBRICACIÓN DE BARRA ESTABILIZADORA	796
TAPÓN DE DRENAJE	4T-2069	3	BASTIDOR TELESCÓPICO DEL RESORTE TENSOR (GR)	768
		3	BASTIDOR TELESCÓPICO DEL RESORTE TENSOR (GR)	770
		6	BASTIDOR TELESCÓPICO DEL RESORTE TENSOR (GR)	772
		6	BASTIDOR TELESCÓPICO DEL RESORTE TENSOR (GR)	774
		3	BASTIDOR TELESCÓPICO DEL RESORTE TENSOR (GR)	776
		3	BASTIDOR TELESCÓPICO DEL RESORTE TENSOR (GR)	778
		6	BASTIDOR TELESCÓPICO DEL RESORTE TENSOR (GR)	780

PEÇAS DE MANUTENÇÃO

DESCRIÇÃO	NÚMERO DE PEÇA	QUANT	UTILIZADA EM	PÁGINA
ACESSÓRIOS				
BUJÃO DO DRENO	5H-7110	1	CAIXA - GUINCHO	1070
ELEMENTO - FILTRANTE	2P-5834	1	CONTROLE DO GUINCHO	1086
FILTRO - MAGNÉTICO	8S-9129	1	FILTRO - MAGNÉTICO	1136
GRAXEIRA	3B-8489	2	ARMAÇÃO DO RIPER	1090
		2	ARMAÇÃO DO RIPER	1092
		2	ARMAÇÃO DO RIPER	1094
		2	ARMAÇÃO DO RIPER	1096
		2	ARMAÇÃO DO RIPER	1098
		2	JOGO DE GAXETA	1103
		2	JOGO DE GAXETA	1104
		2	MONTAGEM - CILINDRO	1114
		6	ROLDANAS DE GUIA DO GUINCHO	1089
GRAXEIRA (ROSCA 1/8-27 POL)	3B-8489	1	TIRANTE DA LÂMINA	1064
RESPIRO	2Y-7359	1	CAIXA - GUINCHO	1070
	9G-5127	1	INSTALACÃO DO GUINCHO	1102
TELA DE SUCÇÃO	8S-9130	1	FILTRO - MAGNÉTICO	1136
CHASSI E CARROCERIA				
CADEADO	5P-8502	2	CAPÔ E PROTETOR	736
		2	COBERTURA - PÁRA-LAMA	700
		2	COBERTURA - PÁRA-LAMA	704
		3	COBERTURA DO MOTOR	694
		1	PÁRA-LAMA	708
TAMPÃO	106-8187	1	CAIXA E CHASSI	678
		1	CAIXA E CHASSI	680
		1	CAIXA E CHASSI	682
MÁQUINA - ARRANJO				
BATERIA (12 VOLT/SECO)	9X-9730	4	MÁQUINA - TEMPO FRIO	2

PEÇAS DE MANUTENÇÃO

DESCRIÇÃO	NÚMERO DE PEÇA	QUANT	UTILIZADA EM	PÁGINA
MATERIAL RODANTE				
BUJÃO DO DRENO	4T-2069	3	ARMAÇÃO TELESCÓPICA DA MOLA TENSORA	768
		3	ARMAÇÃO TELESCÓPICA DA MOLA TENSORA	770
		6	ARMAÇÃO TELESCÓPICA DA MOLA TENSORA	772
		6	ARMAÇÃO TELESCÓPICA DA MOLA TENSORA	774
		3	ARMAÇÃO TELESCÓPICA DA MOLA TENSORA	776
		3	ARMAÇÃO TELESCÓPICA DA MOLA TENSORA	778
		6	ARMAÇÃO TELESCÓPICA DA MOLA TENSORA	780
CONEXÃO	1K-6853	4	BARRA DE SUSPENSÃO	746
GRAXEIRA	3B-8489	2	BARRA DE SUSPENSÃO	746
		2	BARRA DE SUSPENSÃO	748
		2	BARRA DE SUSPENSÃO	752
		2	BARRA DE SUSPENSÃO	757
		2	RODA-GUIA DAS ESTEIRAS	786
GRAXEIRA (ROSCA 1/8-27 POL)	3B-8489	2	BARRA DE SUSPENSÃO	754
		2	BARRA DE SUSPENSÃO	759
		2	BARRA DE SUSPENSÃO	760
		2	BARRA DE SUSPENSÃO	761
RESPIRO	198-7711	1	LUBRIFICAÇÃO-BARRA EQUALIZADORA	796
TAMPA - BOCAL DE ENCHIMENTO DE ÓLEO	5L-2952	1	LUBRIFICAÇÃO-BARRA EQUALIZADORA	796
TAMPA - NÍVEL DO ÓLEO	9W-8277	1	EIXO PIVÔ - LUBRIFICAÇÃO	798
		1	EIXO PIVÔ - LUBRIFICAÇÃO	800

PEÇAS DE MANUTENÇÃO

DESCRIÇÃO	NÚMERO DE PEÇA	QUANT	UTILIZADA EM	PÁGINA
MOTOR BÁSICO				
BUJÃO - ANEL O	9S-4190	1	COMANDO DO VENTILADOR	74
BUJÃO - ANEL O (7/16-20 THD)	9S-4190	5	BUJÃO DO BLOCO DO CILINDRO	101
BUJÃO - DRENAGEM DO ÓLEO	4P-0513	1	CÁRTER DO ÓLEO DO MOTOR	96
BUJÃO DO DRENO	5F-0304	1	CAIXA DO VOLANTE DO MOTOR	90
CORREIA EM V	133-6443	1	JOGO DE CORREIAS EM V	109
GRAXEIRA	3B-8485	1	AJUSTADOR DE CORREIAS	18
		1	COMANDO DO VENTILADOR	70
		1	COMANDO DO VENTILADOR	76
JOGO DE CORREIAS EM V (INCLUI 4 CORREIAS)	123-5889	1	COMANDO DO VENTILADOR	57
		1	COMANDO DO VENTILADOR	58
		1	COMANDO DO VENTILADOR	59
		1	COMANDO DO VENTILADOR	62
		1	COMANDO DO VENTILADOR	63
		1	COMANDO DO VENTILADOR	64
		1	COMANDO DO VENTILADOR	65
		1	COMANDO DO VENTILADOR	66
		1	COMANDO DO VENTILADOR	75
	133-6445	1	JOGO DE CORREIAS EM V	109
	180-4526	1	COMANDO DO VENTILADOR	70
		1	COMANDO DO VENTILADOR	74
		1	COMANDO DO VENTILADOR	76
RESPIRO	4N-4668	2	TAMPA - MECANISMO DAS VÁLVULAS	26
		3	TAMPA - MECANISMO DAS VÁLVULAS	27
TAMPA CONTRA POEIRA	6V-0852	1	BUJÃO DO BLOCO DO CILINDRO	101

PEÇAS DE MANUTENÇÃO

DESCRIÇÃO	NÚMERO DE PEÇA	QUANT	UTILIZADA EM	PÁGINA
POSTO DO OPERADOR				
CINTO DE SEGURANÇA	183-3648	1	ASSENTO	1386
		1	ASSENTO	1387
CINTO DE SEGURANÇA (RETRÁTIL)	8Y-3792	1	ASSENTO COM SUSPENSÃO	1391
	122-4617	1	ASSENTO	1380
		1	ASSENTO COM SUSPENSÃO	1389
		1	ASSENTO COM SUSPENSÃO	1392
	156-1148	1	ASSENTO	1381
		1	ASSENTO COM SUSPENSÃO	1393
CORREIA EM V	2P-6532	1	COMPRESSOR DE REFRIGERANTE	1244
		1	COMPRESSOR DE REFRIGERANTE	1248
	2P-7333	1	COMPRESSOR DE REFRIGERANTE	1242
DISJUNTOR AUTOMÁTICO DE CIRCUITO (15 A)	6N-8589	1	CONDENSADOR DO REFRIGERANTE E MONTAGEM	1252
	6T-3643	1	CONDENSADOR DO REFRIGERANTE E MONTAGEM	1257
		1	CONDENSADOR DO REFRIGERANTE E MONTAGEM	1260
FILTRO - AR (CABINE)	7T-1890	1	AQUECEDOR	1280
		1	AQUECEDOR	1282
	107-0266	1	AQUECEDOR	1280
		1	AQUECEDOR	1282
LÂMINA DO LIMPADOR DE PÁRA-BRISA	5C-8811	1	LIMPADOR DO VIDRO	1456
		1	LIMPADOR DO VIDRO	1460
	6V-5849	4	LIMPADOR DO VIDRO	1456
		4	LIMPADOR DO VIDRO	1460
	6V-5851	1	LIMPADOR DO VIDRO	1456
		1	LIMPADOR DO VIDRO	1460
LÂMPADA (24 V)	7N-1996	2	PAINEL DE INSTRUMENTOS	1352
LÂMPADA (28 V)	7N-1996	2	PAINEL DE INSTRUMENTOS	1350
LENTE VERMELHA	6T-7058	2	PAINEL DE INSTRUMENTOS	1350
		2	PAINEL DE INSTRUMENTOS	1352
MAÇANETA	5M-8500	2	CABINE	1235
SUPORTE DA LAMPADA INDICADORA	3T-0304	2	PAINEL DE INSTRUMENTOS	1352
TAMPA - CONDICIONADOR DE AR (ROSCA DE 7/16 X 20)	2L-1224	1	CONDENSADOR DE REFRIGERANTE	1264
TAMPA COM RESPIRO	8E-8292	1	TANQUE - LAVADOR DE JANELA	1424
SISTEMA DA ADMISSÃO DE AR E DE ESCAPE				
ELEMENTO - FILTRANTE	7M-1674	1	TUBOS - AR	202
		1	TUBOS - AR	203
ELEMENTO - PRIMÁRIO	106-3969	1	PURIFICADOR DE AR	196
ELEMENTO - SECUNDÁRIO	106-3973	1	PURIFICADOR DE AR	196
PROTETOR CONTRA CHUVA	7S-5003	1	EJETOR DE POEIRA	197

PEÇAS DE MANUTENÇÃO

DESCRIÇÃO	NÚMERO DE PEÇA	QUANT	UTILIZADA EM	PÁGINA
SISTEMA DE ARREFECIMENTO				
BUJÃO DO DRENO	7N-1447	1	RADIADOR	180
CORREIA EM V	135-8654	1	VENTILADOR - ROTAÇÃO VARIÁVEL	152
		1	VENTILADOR - ROTAÇÃO VARIÁVEL	154
DISJUNTOR AUTOMÁTICO DE CIRCUITO (15 A)	6T-3643	1	VENTILADOR - ROTAÇÃO VARIÁVEL	152
ELEMENTO - CONDICIONADOR DO LÍQUIDO ARREFECEDOR	9Y-1022	1	CONDICIONADOR DO LÍQUIDO ARREFECEDOR	143
FILTRO (BOMBA D'ÁGUA)	111-2721	1	BOMBA DE ÁGUA	172
		1	BOMBA DE ÁGUA	174
		1	BOMBA DE ÁGUA	176
FUSÍVEL (1/4 AMP)	137-2082	1	VENTILADOR - ROTAÇÃO VARIÁVEL	152
		1	VENTILADOR - ROTAÇÃO VARIÁVEL	154
FUSÍVEL (15 A)	8M-8948	1	VENTILADOR - ROTAÇÃO VARIÁVEL	152
		1	VENTILADOR - ROTAÇÃO VARIÁVEL	154
REGULADOR DE TEMPERATURA DA ÁGUA	7C-3095	2	TUBOS - ÁGUA	166
REGULADOR DE TEMPERATURA DA ÁGUA (92 GRAUS CENTÍGRADOS)	4W-4794	2	TUBOS - ÁGUA	158
		2	TUBOS - ÁGUA	162
TAMPA - RADIADOR	031-1119	1	TANQUE - LÍQUIDO ARREFECEDOR	183
		1	TANQUE DE ÁGUA	184
		1	TANQUE DE ÁGUA	188
VEDAÇÃO	3S-9643	1	TUBOS - ÁGUA	158
		1	TUBOS - ÁGUA	162
		1	TUBOS - ÁGUA	166
SISTEMA DE COMBUSTÍVEL				
CADEADO	5P-8502	1	ADAPTADOR - ABASTECIMENTO RÁPIDO DE COMBUSTÍVEL	218
		1	FILTRO - COMBUSTÍVEL	248
		1	FILTRO - COMBUSTÍVEL	250
		1	TANQUE DE COMBUSTÍVEL	308
		1	TANQUE DE COMBUSTÍVEL	312
		1	TUBOS - COMBUSTÍVEL	262
CARTUCHO - FILTRO	1Q-2541	1	TANQUE DE COMBUSTÍVEL	310
CHAVE	5P-8500	1	TANQUE DE COMBUSTÍVEL	308
		1	TANQUE DE COMBUSTÍVEL	312
ELEMENTO - FILTRANTE	129-0373	1	BOMBA DE ESCORVA DO COMBUSTÍVEL E DO FILTRO PRIMÁRIO	292
		1	FILTRO DE COMBUSTÍVEL E SEPARADOR DE ÁGUA	252
		1	FILTRO E TUBOS - COMBUSTÍVEL	246
FILTRO	1Q-3363	1	TANQUE DE COMBUSTÍVEL	310
FILTRO - COMBUSTÍVEL	1R-0749	2	TUBOS - FILTRO DO COMBUSTÍVEL	264
	9P-7121	1	TANQUE DE COMBUSTÍVEL	308
FILTRO - SEPARADOR DE ÁGUA E COMBUSTÍVEL	129-0372	1	BOMBA DE ESCORVA DO COMBUSTÍVEL E DO FILTRO PRIMÁRIO	292
		1	FILTRO E TUBOS - COMBUSTÍVEL	246
FILTRO - SEPARADOR DE ÁGUA E COMBUSTÍVEL (PRIMÁRIO)	129-0372	1	FILTRO DE COMBUSTÍVEL E SEPARADOR DE ÁGUA	252

PEÇAS DE MANUTENÇÃO

DESCRIÇÃO	NÚMERO DE PEÇA	QUANT	UTILIZADA EM	PÁGINA
FILTRO (BOMBA HIDRÁULICA DA UNIDADE INJETORA)	125-5835	1	COMANDO DA BOMBA HIDRÁULICA DO INJETOR	234
		1	COMANDO DA BOMBA HIDRÁULICA DO INJETOR	242
		1	COMANDO DA BOMBA HIDRÁULICA DO INJETOR	244
FILTRO (SEPARADOR DE ÁGUA E COMBUSTÍVEL)	1R-0769	1	FILTRO DE COMBUSTÍVEL E SEPARADOR DE ÁGUA	253
INDICADOR E TAMPA	1Q-3828	1	TANQUE DE COMBUSTÍVEL	310
JUNTA (BOMBA DE ESCORVA DE COMBUSTÍVEL)	1P-0436	1	BOMBA DE ESCORVA DO COMBUSTÍVEL	291
		1	BOMBA DE ESCORVA DO COMBUSTÍVEL E DO FILTRO PRIMÁRIO	292
		1	FILTRO E TUBOS - COMBUSTÍVEL	246
PENEIRA DO TANQUE DE COMBUSTÍVEL	9P-7121	1	TANQUE DE COMBUSTÍVEL	312
RESPIRO	6G-7803	1	ADAPTADOR - ABASTECIMENTO RÁPIDO DE COMBUSTÍVEL	216
RETENTOR DE ANEL-O (DIÂMETRO INTERNO DE 110,49 MM)	9X-8600	1	TANQUE DE COMBUSTÍVEL	308
TAMPA	6V-9830	1	FILTRO - COMBUSTÍVEL	248
		1	FILTRO - COMBUSTÍVEL	250
TAMPA CONTRA POEIRA	9D-0630	1	ADAPTADOR - ABASTECIMENTO RÁPIDO DE COMBUSTÍVEL	216
		1	ADAPTADOR - ABASTECIMENTO RÁPIDO DE COMBUSTÍVEL	218
		1	ADAPTADOR - ABASTECIMENTO RÁPIDO DE COMBUSTÍVEL	220
		1	ADAPTADOR - ABASTECIMENTO RÁPIDO DE COMBUSTÍVEL	222
		1	ADAPTADOR - ABASTECIMENTO RÁPIDO DE COMBUSTÍVEL	224
		1	ADAPTADOR - ABASTECIMENTO RÁPIDO DE COMBUSTÍVEL	226
TAMPA DO BOCAL DE ENCHIMENTO DO TANQUE DE COMBUSTÍVEL	101-8909	1	ADAPTADOR - ABASTECIMENTO RÁPIDO DE COMBUSTÍVEL	216
		1	ADAPTADOR - ABASTECIMENTO RÁPIDO DE COMBUSTÍVEL	218
TAMPA DO TANQUE DE COMBUSTÍVEL	7X-7700	1	TANQUE DE COMBUSTÍVEL	308
		1	TANQUE DE COMBUSTÍVEL	313
TAMPA (ROSCA 13/16-16)	6V-9830	1	FILTRO E TUBOS - COMBUSTÍVEL	246
TELA DO TANQUE DE COMBUSTÍVEL	6T-7774	1	FILTRO - COMBUSTÍVEL	250
		1	TUBOS - COMBUSTÍVEL	262
SISTEMA DE DIREÇÃO E DE FREIO				
TAMPA CONTRA POEIRA	6V-0852	4	VÁLVULA DA DIREÇÃO E MONTAGEM	877

PEÇAS DE MANUTENÇÃO

DESCRIÇÃO	NÚMERO DE PEÇA	QUANT	UTILIZADA EM	PÁGINA
SISTEMA DE LUBRIFICAÇÃO				
TAMPA	110-8318	1	ÓLEO - ARRANJO PARA TROCA RÁPIDA	132
TAMPA - BOCAL DE ENCHIMENTO	6N-2206	1	BOCAL DE ENCHIMENTO DE ÓLEO DO MOTOR	114
TAMPA CONTRA POEIRA	6V-0852	1	TUBOS - SUPRIMENTO DE ÓLEO	126
TELA	4N-0913	1	TUBOS - ÓLEO DO MOTOR	120
SISTEMA ELÉTRICO E DE PARTIDA				
BATERIA (12 V)	9X-9730	2	BATERIA E CABOS / FIOS ELÉTRICOS	328
		2	BATERIA E CABOS / FIOS ELÉTRICOS	336
		2	BATERIA E CABOS / FIOS ELÉTRICOS	344
		2	BATERIA E CABOS / FIOS ELÉTRICOS	354
		2	BATERIA E CABOS / FIOS ELÉTRICOS	362
		2	BATERIA E CABOS / FIOS ELÉTRICOS	370
		2	PARTIDA EM TEMPO FRIO - ARRANJO	476
		2	PARTIDA EM TEMPO FRIO - ARRANJO	480
BUJÃO - CANO/TUBO	8T-6761	1	AQUECEDOR DO LÍQUIDO ARREFECEDOR	399
CADEADO	5P-8502	1	PARTIDA EM TEMPO FRIO - ARRANJO	477
		1	PARTIDA EM TEMPO FRIO - ARRANJO	481
CHAVE (DESCONECTAR A BATERIA)	8H-5306	1	CHAVE GERAL	499
CORREIA EM V	4N-2531	1	ALTERNADOR DE CORRENTE	318
	6N-6657	1	ALTERNADOR DE CORRENTE	324
	9L-6645	1	ALTERNADOR DE CORRENTE	326
DISJUNTOR AUTOMÁTICO DE CIRCUITO (10 A)	9G-9487	3	CABOS/FIOS ELÉTRICOS DO CONSOLE	506
		1	CABOS/FIOS ELÉTRICOS DO CONSOLE	512
		1	CABOS/FIOS ELÉTRICOS DO CONSOLE	516
DISJUNTOR AUTOMÁTICO DE CIRCUITO (10 A) (AUXILIAR)	9G-9487	1	CABOS/FIOS ELÉTRICOS DO CONSOLE	509
DISJUNTOR AUTOMÁTICO DE CIRCUITO (10 A) (CHAVE)	9G-9487	1	CABOS/FIOS ELÉTRICOS DO CONSOLE	508
DISJUNTOR AUTOMÁTICO DE CIRCUITO (10 A) (PARTIDA DO MOTOR)	9G-9487	1	CABOS/FIOS ELÉTRICOS DO CONSOLE	509
		1	CABOS/FIOS ELÉTRICOS DO CONSOLE	512
		1	CABOS/FIOS ELÉTRICOS DO CONSOLE	516
DISJUNTOR AUTOMÁTICO DE CIRCUITO (105 A)	3E-7294	2	CABOS/FIOS ELÉTRICOS DO CONSOLE	506
DISJUNTOR AUTOMÁTICO DE CIRCUITO (105 A) (ALTERNADOR)	3E-7294	1	CABOS/FIOS ELÉTRICOS DO CONSOLE	508
		1	CABOS/FIOS ELÉTRICOS DO CONSOLE	512
		1	CABOS/FIOS ELÉTRICOS DO CONSOLE	516
DISJUNTOR AUTOMÁTICO DE CIRCUITO (105 A) (PRINCIPAL)	3E-7294	1	CABOS/FIOS ELÉTRICOS DO CONSOLE	508
		1	CABOS/FIOS ELÉTRICOS DO CONSOLE	512

PEÇAS DE MANUTENÇÃO

DESCRIÇÃO	NÚMERO DE PEÇA	QUANT	UTILIZADA EM	PÁGINA
		1	CABOS/FIOS ELÉTRICOS DO CONSOLE	516
DISJUNTOR AUTOMÁTICO DE CIRCUITO (15 A)	3T-2662	1	CABOS/FIOS ELÉTRICOS DO CONSOLE	506
	6N-8589	3	CABOS/FIOS ELÉTRICOS DO CONSOLE	506
		1	CABOS/FIOS ELÉTRICOS DO CONSOLE	512
		1	CABOS/FIOS ELÉTRICOS DO CONSOLE	516
DISJUNTOR AUTOMÁTICO DE CIRCUITO (15 A) (FAROL DIANTEIRO)	3T-2662	1	CABOS/FIOS ELÉTRICOS DO CONSOLE	508
		1	CABOS/FIOS ELÉTRICOS DO CONSOLE	512
		1	CABOS/FIOS ELÉTRICOS DO CONSOLE	516
DISJUNTOR AUTOMÁTICO DE CIRCUITO (15 A) (MOTOR)	6N-8589	1	CABOS/FIOS ELÉTRICOS DO CONSOLE	508
		1	CABOS/FIOS ELÉTRICOS DO CONSOLE	512
		1	CABOS/FIOS ELÉTRICOS DO CONSOLE	516
DISJUNTOR AUTOMÁTICO DE CIRCUITO (15 A) (MOTOR DO VENTILADOR)	6N-8589	1	CABOS/FIOS ELÉTRICOS DO CONSOLE	512
		1	CABOS/FIOS ELÉTRICOS DO CONSOLE	516
DISJUNTOR AUTOMÁTICO DE CIRCUITO (15 A) (TOMADA)	6N-8589	1	CABOS/FIOS ELÉTRICOS DO CONSOLE	509
		1	CABOS/FIOS ELÉTRICOS DO CONSOLE	512
		1	CABOS/FIOS ELÉTRICOS DO CONSOLE	516
DISJUNTOR AUTOMÁTICO DE CIRCUITO (15 A) (VENTILADOR)	6N-8589	1	CABOS/FIOS ELÉTRICOS DO CONSOLE	509
ELEMENTO - AQUECEDOR DE ÁGUA DA CAMISA	6T-3764	2	AQUECEDOR DA ÁGUA DO MOTOR	412
	9G-6655	2	AQUECEDOR DA ÁGUA DO MOTOR	411
ELEMENTO - AQUECEDOR DE ÁGUA DA CAMISA (120 VOLTS/1500 WATTS)	9G-6655	2	AQUECEDOR DA ÁGUA DO MOTOR	410
ESCOVA	3T-9524	6	MOTOR ELÉTRICO DE PARTIDA	494
ESCOVA (MOTOR DE PARTIDA)	3T-9524	6	MOTOR ELÉTRICO DE PARTIDA	484
FAROL DIANTEIRO (24 V) (FAROL)	9X-3463	1	LÂMPADA - FAROL	418
		1	LÂMPADA - FAROL	419
FILTRO - ESPUMA	111-4402	1	BATERIA E CABOS / FIOS ELÉTRICOS	330
		1	BATERIA E CABOS / FIOS ELÉTRICOS	337
		1	BATERIA E CABOS / FIOS ELÉTRICOS	345
		1	BATERIA E CABOS / FIOS ELÉTRICOS	354
		1	BATERIA E CABOS / FIOS ELÉTRICOS	362
		1	BATERIA E CABOS / FIOS ELÉTRICOS	370
FUSÍVEL	123-0932	1	AQUECEDOR DO LÍQUIDO ARREFECEDOR	398
FUSÍVEL (10 A)	3K-8782	7	CABOS/FIOS ELÉTRICOS DO CONSOLE	506

DESCRIÇÃO	NÚMERO DE PEÇA	QUANT	UTILIZADA EM	PÁGINA
		7	CABOS/FIOS ELÉTRICOS DO CONSOLE	508
		10	CABOS/FIOS ELÉTRICOS DO CONSOLE	513
		10	CABOS/FIOS ELÉTRICOS DO CONSOLE	517
FUSÍVEL (15 A)	8M-8948	1	CABOS/FIOS ELÉTRICOS DO CONSOLE	506
		1	CABOS/FIOS ELÉTRICOS DO CONSOLE	508
		2	CABOS/FIOS ELÉTRICOS DO CONSOLE	513
		2	CABOS/FIOS ELÉTRICOS DO CONSOLE	517
FUSÍVEL (20 A)	8M-0456	2	CABOS/FIOS ELÉTRICOS DO CONSOLE	506
		2	CABOS/FIOS ELÉTRICOS DO CONSOLE	508
		2	CABOS/FIOS ELÉTRICOS DO CONSOLE	512
		2	CABOS/FIOS ELÉTRICOS DO CONSOLE	516
JOGO DE TERMINAL	3N-3763	1	MOTOR ELÉTRICO DE PARTIDA	495
JOGO DE TERMINAL (MOTOR DE PARTIDA)	3N-3763	1	MOTOR ELÉTRICO DE PARTIDA	485
LÂMPADA (24 V)	3E-8825	2	CABOS/FIOS ELÉTRICOS - PLATAFORMA	522
		2	CABOS/FIOS ELÉTRICOS - PLATAFORMA	526
	7N-5876	4	CABOS/FIOS ELÉTRICOS - PLATAFORMA	522
		4	CABOS/FIOS ELÉTRICOS - PLATAFORMA	526
LÂMPADA (24 V) (FAROL)	9X-3463	1	LÂMPADA - FAROL	415
LÂMPADA (24 V) (TETO)	7N-9943	1	LÂMPADA - TETO	414
LÂMPADA (24 V) (65 WATTS)	9X-3463	1	LÂMPADA - FAROL	416
LÂMPADA (24 VOLTS)(65 WATTS)	9X-3463	1	LÂMPADA - FAROL	417
LENTE (FAROL)	158-0248	1	LÂMPADA - FAROL	418
		1	LÂMPADA - FAROL	419
LENTE (HOLOFOTE)	107-5853	1	LÂMPADA - FAROL	415
		1	LÂMPADA - FAROL	416
LENTE (LÂMPADA DO TETO)	7T-0020	1	LÂMPADA - TETO	414
LENTES - FAROL	107-5853	1	LÂMPADA - FAROL	417
MOLA	3T-9494	6	MOTOR ELÉTRICO DE PARTIDA	495
	9M-7609	1	MOTOR ELÉTRICO DE PARTIDA	494
MOLA (ESCOVA DO MOTOR DE PARTIDA)	3T-9494	1	MOTOR ELÉTRICO DE PARTIDA	484
		6	MOTOR ELÉTRICO DE PARTIDA	485
SUPORTE - ESCOVA	6T-0363	6	MOTOR ELÉTRICO DE PARTIDA	495
SUPORTE - ESCOVA (ESCOVA DO MOTOR DE PARTIDA)	6T-0363	6	MOTOR ELÉTRICO DE PARTIDA	484
TAMPA - PORTA-FUSÍVEL	7N-2867	1	CABOS/FIOS ELÉTRICOS DO CONSOLE	506

PEÇAS DE MANUTENÇÃO

DESCRIÇÃO	NÚMERO DE PEÇA	QUANT	UTILIZADA EM	PÁGINA
	139-0178	1	CABOS/FIOS ELÉTRICOS DO CONSOLE	508
		1	CABOS/FIOS ELÉTRICOS DO CONSOLE	512
		1	CABOS/FIOS ELÉTRICOS DO CONSOLE	516
TAMPA - RECEPTÁCULO	8C-6354	1	CABOS/FIOS ELÉTRICOS DO CONSOLE	506
		1	CABOS/FIOS ELÉTRICOS DO CONSOLE	508
		1	CABOS/FIOS ELÉTRICOS DO CONSOLE	512
		1	CABOS/FIOS ELÉTRICOS DO CONSOLE	516
TAMPA CONTRA POEIRA	6N-1604	2	AQUECEDOR DA ÁGUA DO MOTOR	410
TAMPA DE CONECTOR	9G-4360	1	CABOS/FIOS ELÉTRICOS DO CONSOLE	506
		1	CABOS/FIOS ELÉTRICOS DO CONSOLE	508

PEÇAS DE MANUTENÇÃO

DESCRIÇÃO	NÚMERO DE PEÇA	QUANT	UTILIZADA EM	PÁGINA
SISTEMA HIDRÁULICO				
CADEADO	5P-8502	1	TAMPA - TANQUE HIDRÁULICO	896
ELEMENTO - FILTRANTE (FLUIDO RESISTENTE A FOGO)	1U-2092	2	TANQUE HIDRÁULICO E FILTRO	998
ELEMENTO FILTRANTE - ÓLEO (FLUXO HIDRÁULICO/REVERSO) (DESCARTÁVEL)	1R-0735	2	TANQUE HIDRÁULICO E FILTRO	998
GRAXEIRA	3B-8489	1	CILINDRO - INCLINAÇÃO DA LÂMINA	902
		1	CILINDRO - INCLINAÇÃO DA LÂMINA	904
		1	CILINDRO - INCLINAÇÃO DA LÂMINA	906
		2	CILINDRO DE INCLINAÇÃO DO RÍPER	930
		1	CILINDRO DE INCLINAÇÃO DUAL	908
		1	CILINDRO DE INCLINAÇÃO DUAL	910
		2	CILINDRO DE LEVANTAMENTO DO RIPER	912
		2	CILINDRO DE LEVANTAMENTO DO RIPER	914
		2	CILINDRO DE LEVANTAMENTO DO RIPER	916
		2	CILINDRO DE LEVANTAMENTO DO RIPER	918
		2	CILINDRO DE LEVANTAMENTO DO RIPER	920
GRAXEIRA (ROSCA 1/8-27 POL)	3B-8489	2	CILINDRO DE LEVANTAMENTO DO RIPER	922
RETENTOR DE ANEL-O	2S-4078	1	TUBOS - BOMBA	942
		1	TUBOS - BOMBA	943
		1	TUBOS - BOMBA	949
		2	TUBOS - BOMBA	956
		1	TUBOS - BOMBA	958
		1	VÁLVULA DE CONTROLE	1026
TAMPA - BOCAL DE ENCHIMENTO (HIDRÁULICO)	7H-1447	1	TANQUE HIDRÁULICO E FILTRO	998
TAMPA CONTRA POEIRA	6V-0852	2	TUBOS - BOMBA	943
		2	TUBOS - BOMBA	948
		2	TUBOS - BOMBA	956
		1	VÁLVULA DE CONTROLE DE PRESSÃO	1040
	8C-3451	1	TANQUE HIDRÁULICO E FILTRO	998
TELA FILTRANTE	5D-7927	1	TANQUE HIDRÁULICO E FILTRO	998
	9T-7571	1	TANQUE HIDRÁULICO E FILTRO	998
TREM DE FORÇA				
BUJÃO MAGNÉTICO	6V-3298	1	COMANDO final	558
		1	COMANDO final	562
		1	COMANDO final	566
		1	COMANDO final	570
		1	COMANDO final	574
		1	COMANDO final	578
		1	COMANDO final	582
		1	COMANDO final	586
		1	COMANDO final	590
		1	COMANDO final	594
ELEMENTO FILTRANTE - ÓLEO	132-8875	1	FILTRO - ÓLEO	552

PEÇAS DE MANUTENÇÃO

DESCRIÇÃO	NÚMERO DE PEÇA	QUANT	UTILIZADA EM	PÁGINA
	132-8876	1	FILTRO - ÓLEO	554
		1	FILTRO - ÓLEO	556
		2	TUBOS - ÓLEO DA TRANSMISSÃO	614
		2	TUBOS - ÓLEO DA TRANSMISSÃO	618
		2	TUBOS - ÓLEO DA TRANSMISSÃO	622
FILTRO - ÓLEO DO MOTOR	1R-0716	2	FILTRO - ÓLEO	550
GRAXEIRA (ROSCA 1/8-27 POL)	3B-8489	1	COMANDO final	582
PARAFUSO (1-14X3,75 POL)	9S-1367	10	COROA E ENGRENAGEM DE TRANFERÊNCIA	598
RESPIRO	9G-5127	1	TUBOS - ÓLEO DA TRANSMISSÃO	614
		1	TUBOS - ÓLEO DA TRANSMISSÃO	618
		1	TUBOS - ÓLEO DA TRANSMISSÃO	622
RESPIRO (ALÍVIO DE PRESSÃO)	9G-5127	1	TUBOS - ÓLEO DA TRANSMISSÃO	603
		1	TUBOS - ÓLEO DA TRANSMISSÃO	609
RETENTOR DE ANEL-O	2S-4078	1	COMANDO final	558
		1	COMANDO final	562
		1	COMANDO final	566
		1	COMANDO final	570
		1	COMANDO final	574
		1	COMANDO final	578
		1	COMANDO final	582
		1	COMANDO final	586
		1	COMANDO final	590
		1	COMANDO final	594
	3J-1907	2	FILTRO - ÓLEO	554
		2	FILTRO - ÓLEO	556
TAMPA - BOCAL DE ENCHIMENTO	6N-2985	1	TUBOS - ÓLEO DA TRANSMISSÃO	602
		1	TUBOS - ÓLEO DA TRANSMISSÃO	608
		1	TUBOS - ÓLEO DA TRANSMISSÃO	614
		1	TUBOS - ÓLEO DA TRANSMISSÃO	618
		1	TUBOS - ÓLEO DA TRANSMISSÃO	622
TAMPA CONTRA POEIRA	6V-0852	2	CARCAÇA DAS ENGRENAGENS PLANETÁRIAS E COMPONENTES	536
		2	TUBOS - ÓLEO DA TRANSMISSÃO	602
		2	TUBOS - ÓLEO DA TRANSMISSÃO	603
		2	TUBOS - ÓLEO DA TRANSMISSÃO	608
		2	TUBOS - ÓLEO DA TRANSMISSÃO	609
		4	TUBOS - ÓLEO DA TRANSMISSÃO	614
		4	TUBOS - ÓLEO DA TRANSMISSÃO	618
		4	TUBOS - ÓLEO DA TRANSMISSÃO	622
		1	VÁLVULA DE ALÍVIO	666
		1	VÁLVULA DE ALÍVIO	668
		4	VÁLVULA DE CONTROLE - TRANSMISSÃO	673
		1	VÁLVULA PILOTO E MONTAGEM	651
	8C-3445	1	FILTRO - ÓLEO	550
	8C-3447	1	TUBOS - ÓLEO DA TRANSMISSÃO	603
		1	TUBOS - ÓLEO DA TRANSMISSÃO	609
		1	TUBOS - ÓLEO DA TRANSMISSÃO	614
		1	TUBOS - ÓLEO DA TRANSMISSÃO	618
		1	TUBOS - ÓLEO DA TRANSMISSÃO	622
TAMPÃO	9S-4191	2	BOMBA DE ENGRENAGENS	636
		1	CONVERSOR DE TORQUE	646
		2	FILTRO - ÓLEO	554

PEÇAS DE MANUTENÇÃO

DESCRIÇÃO	NÚMERO DE PEÇA	QUANT	UTILIZADA EM	PÁGINA
		2	FILTRO - ÓLEO	556
		2	VÁLVULA DE CONTROLE	654
		2	VÁLVULA DE CONTROLE	656
		2	VÁLVULA DE CONTROLE	658
TELA DE SUCÇÃO	3S-3875	1	TUBOS - ÓLEO DA TRANSMISSÃO	602
		1	TUBOS - ÓLEO DA TRANSMISSÃO	608
		1	TUBOS - ÓLEO DA TRANSMISSÃO	614
		1	TUBOS - ÓLEO DA TRANSMISSÃO	618
		1	TUBOS - ÓLEO DA TRANSMISSÃO	622
	8S-9130	1	CARCAÇA DAS ENGRENAGENS PLANETÁRIAS E COMPONENTES	536
		1	CONVERSOR DE TORQUE	646

WARTUNGSTEILE

BESCHREIBUNG	ERSATZTEIL-NUMMER	MENGE	VERWENDET IN	SEITE
ARBEITSGERÄTE				
ABLASSSTOPFEN	5H-7110	1	WINDENGEHÄUSE	1070
ANSAUGSIEB	8S-9130	1	MAGNETSIEB	1136
ENTLÜFTER	2Y-7359	1	WINDENGEHÄUSE	1070
	9G-5127	1	WINDENEINBAUSATZ	1102
FILTER	2P-5834	1	WINDENSTEUERUNG	1086
MAGNETFILTER	8S-9129	1	MAGNETSIEB	1136
SCHMIERNIPPEL	3B-8489	2	AUFREISSERRAHMEN	1090
		2	AUFREISSERRAHMEN	1092
		2	AUFREISSERRAHMEN	1094
		2	AUFREISSERRAHMEN	1096
		2	AUFREISSERRAHMEN	1098
		2	DICHTUNGSSATZ	1103
		2	DICHTUNGSSATZ	1104
		6	ROLLENTURM	1089
		2	ZYLINDERAUFHÄNGUNG	1114
SCHMIERNIPPEL (1/8-27-GEWINDE)	3B-8489	1	SCHILDSTREBE	1064
ELEKTRISCHE ANLAGE UND STARTSYSTEM				
ABDECKGLAS (ARBEITSSCHEIN-WERFER)	107-5853	1	ARBEITSLEUCHTEN	415
		1	ARBEITSLEUCHTEN	416
	158-0248	1	ARBEITSLEUCHTEN	418
		1	ARBEITSLEUCHTEN	419
ABDECKGLAS (FAHRERHAUS-IN-NENLEUCHTE)	7T-0020	1	FAHRERHAUSBELEUCHTUNG	414
ANSCHLUSSKLEMMENSATZ	3N-3763	1	STARTERMOTOR	495
ANSCHLUSSKLEMMENSATZ (STARTERMOTOR)	3N-3763	1	STARTERMOTOR	485
ARBEITSLEUCHTENLINSE	107-5853	1	ARBEITSLEUCHTEN	417
BATTERIE (12 V)	9X-9730	2	BATTERIE UND VERDRAHTUNG	328
		2	BATTERIE UND VERDRAHTUNG	336
		2	BATTERIE UND VERDRAHTUNG	344
		2	BATTERIE UND VERDRAHTUNG	354
		2	BATTERIE UND VERDRAHTUNG	362
		2	BATTERIE UND VERDRAHTUNG	370
		2	KALTWETTERSTARTANLAGE	476
		2	KALTWETTERSTARTANLAGE	480
BÜRSTENHALTER	6T-0363	6	STARTERMOTOR	495
BÜRSTENHALTER (STARTERMOTORBÜRSTE)	6T-0363	6	STARTERMOTOR	484
BÜRSTENSATZ	3T-9524	6	STARTERMOTOR	494
BÜRSTENSATZ (STARTERMOTOR)	3T-9524	6	STARTERMOTOR	484
FEDER	3T-9494	6	STARTERMOTOR	495
	9M-7609	1	STARTERMOTOR	494
FEDER (STARTERMOTORBÜRSTE)	3T-9494	1	STARTERMOTOR	484
		6	STARTERMOTOR	485
KEILRIEMEN	4N-2531	1	DREHSTROMGENERATOR	318
	6N-6657	1	DREHSTROMGENERATOR	324
	9L-6645	1	DREHSTROMGENERATOR	326
LEUCHTE (24 V)	3E-8825	2	FAHRERPLATTFORMVERDRAHTUNG	522
		2	FAHRERPLATTFORMVERDRAHTUNG	526
	7N-5876	4	FAHRERPLATTFORMVERDRAHTUNG	522
		4	FAHRERPLATTFORMVERDRAHTUNG	526

BESCHREIBUNG	ERSATZTEIL-NUMMER	MENGE	VERWENDET IN	SEITE
LEUCHTE (24 V) (ARBEITSSCHEINWERFER)	9X-3463	1	ARBEITSLEUCHTEN	415
LEUCHTE (24 V) (FAHRERHAUSDACH)	7N-9943	1	FAHRERHAUSBELEUCHTUNG	414
LEUCHTE (24 V) (65 W)	9X-3463	1	ARBEITSLEUCHTEN	416
LEUCHTE (24 V)(65 W)	9X-3463	1	ARBEITSLEUCHTEN	417
ROHRSTOPFEN	8T-6761	1	KÜHLMITTELHEIZUNG	399
SCHAUMFILTER	111-4402	1	BATTERIE UND VERDRAHTUNG	330
		1	BATTERIE UND VERDRAHTUNG	337
		1	BATTERIE UND VERDRAHTUNG	345
		1	BATTERIE UND VERDRAHTUNG	354
		1	BATTERIE UND VERDRAHTUNG	362
		1	BATTERIE UND VERDRAHTUNG	370
SCHEINWERFER (24 V) (ARBEITSSCHEINWERFER)	9X-3463	1	ARBEITSLEUCHTEN	418
		1	ARBEITSLEUCHTEN	419
SCHLÜSSEL (HAUPTSCHALTER)	8H-5306	1	TRENNSCHALTER	499
SICHERUNG	123-0932	1	KÜHLMITTELHEIZUNG	398
SICHERUNG (10 A)	3K-8782	7	KONSOLENVERDRAHTUNG	506
		7	KONSOLENVERDRAHTUNG	508
		10	KONSOLENVERDRAHTUNG	513
		10	KONSOLENVERDRAHTUNG	517
SICHERUNG (15 A)	8M-8948	1	KONSOLENVERDRAHTUNG	506
		1	KONSOLENVERDRAHTUNG	508
		2	KONSOLENVERDRAHTUNG	513
		2	KONSOLENVERDRAHTUNG	517
SICHERUNG (20 A)	8M-0456	2	KONSOLENVERDRAHTUNG	506
		2	KONSOLENVERDRAHTUNG	508
		2	KONSOLENVERDRAHTUNG	512
		2	KONSOLENVERDRAHTUNG	516
SICHERUNGSHALTERKAPPE	7N-2867	1	KONSOLENVERDRAHTUNG	506
	139-0178	1	KONSOLENVERDRAHTUNG	508
		1	KONSOLENVERDRAHTUNG	512
		1	KONSOLENVERDRAHTUNG	516
STAUBKAPPE	6N-1604	2	UMLAUFKÜHLWASSERHEIZUNG	410
STECKDOSENDECKEL	8C-6354	1	KONSOLENVERDRAHTUNG	506
		1	KONSOLENVERDRAHTUNG	508
		1	KONSOLENVERDRAHTUNG	512
		1	KONSOLENVERDRAHTUNG	516
UMLAUFKÜHLWASSERHEIZUNGS-ELEMENT	6T-3764	2	UMLAUFKÜHLWASSERHEIZUNG	412
	9G-6655	2	UMLAUFKÜHLWASSERHEIZUNG	411
UMLAUFKÜHLWASSERHEIZUNGS-ELEMENT (120 V/1500 W)	9G-6655	2	UMLAUFKÜHLWASSERHEIZUNG	410
UNTERBRECHER (10 A)	9G-9487	3	KONSOLENVERDRAHTUNG	506
		1	KONSOLENVERDRAHTUNG	512
		1	KONSOLENVERDRAHTUNG	516
UNTERBRECHER (10 A) (MOTOR STARTEN)	9G-9487	1	KONSOLENVERDRAHTUNG	509
		1	KONSOLENVERDRAHTUNG	512
		1	KONSOLENVERDRAHTUNG	516
UNTERBRECHER (10 A) (SCHLÜSSEL)	9G-9487	1	KONSOLENVERDRAHTUNG	508
UNTERBRECHER (10 A) (ZUSATZKREISE)	9G-9487	1	KONSOLENVERDRAHTUNG	509
UNTERBRECHER (105 A)	3E-7294	2	KONSOLENVERDRAHTUNG	506

WARTUNGSTEILE

BESCHREIBUNG	ERSATZTEIL-NUMMER	MENGE	VERWENDET IN	SEITE
UNTERBRECHER (105 A) (DREHSTROMGENERATOR)	3E-7294	1	KONSOLENVERDRAHTUNG	508
		1	KONSOLENVERDRAHTUNG	512
		1	KONSOLENVERDRAHTUNG	516
UNTERBRECHER (105 A) (HAUPTUNTERBRECHER)	3E-7294	1	KONSOLENVERDRAHTUNG	508
		1	KONSOLENVERDRAHTUNG	512
		1	KONSOLENVERDRAHTUNG	516
UNTERBRECHER (15 A)	3T-2662	1	KONSOLENVERDRAHTUNG	506
	6N-8589	3	KONSOLENVERDRAHTUNG	506
		1	KONSOLENVERDRAHTUNG	512
		1	KONSOLENVERDRAHTUNG	516
UNTERBRECHER (15 A) (FRONTSCHEINWERFER)	3T-2662	1	KONSOLENVERDRAHTUNG	512
		1	KONSOLENVERDRAHTUNG	516
UNTERBRECHER (15 A) (LÜFTER)	6N-8589	1	KONSOLENVERDRAHTUNG	509
UNTERBRECHER (15 A) (LÜFTERMOTOR)	6N-8589	1	KONSOLENVERDRAHTUNG	512
		1	KONSOLENVERDRAHTUNG	516
UNTERBRECHER (15 A) (MOTOR)	6N-8589	1	KONSOLENVERDRAHTUNG	508
		1	KONSOLENVERDRAHTUNG	512
		1	KONSOLENVERDRAHTUNG	516
UNTERBRECHER (15 A) (SCHEINWERFER)	3T-2662	1	KONSOLENVERDRAHTUNG	508
UNTERBRECHER (15 A) (STROMAUSLASS)	6N-8589	1	KONSOLENVERDRAHTUNG	509
		1	KONSOLENVERDRAHTUNG	512
		1	KONSOLENVERDRAHTUNG	516
VERBINDERKAPPE	9G-4360	1	KONSOLENVERDRAHTUNG	506
		1	KONSOLENVERDRAHTUNG	508
VORHÄNGESCHLOSS	5P-8502	1	KALTWETTERSTARTANLAGE	477
		1	KALTWETTERSTARTANLAGE	481

WARTUNGSTEILE

BESCHREIBUNG	ERSATZTEIL-NUMMER	MENGE	VERWENDET IN	SEITE
FAHRERHAUS				
GRUNDRAHMEN - ANZEIGELEUCHTE	3T-0304	2	INSTRUMENTENTAFEL	1352
KAPPE MIT ENTLÜFTER	8E-8292	1	SCHEIBENWASCHMITTELBEHÄLTER	1424
KEILRIEMEN	2P-6532	1	KÄLTEMITTELKOMPRESSOR	1244
		1	KÄLTEMITTELKOMPRESSOR	1248
	2P-7333	1	KÄLTEMITTELKOMPRESSOR	1242
KLIMAANLAGEN-VENTILKAPPE (7/16 X 20 GEWINDE)	2L-1224	1	KÄLTEMITTELKONDENSATOR	1264
KNOPF	5M-8500	2	FAHRERHAUS	1235
LEUCHTE (24 V)	7N-1996	2	INSTRUMENTENTAFEL	1352
LEUCHTE (28 V)	7N-1996	2	INSTRUMENTENTAFEL	1350
LINSE - ROT	6T-7058	2	INSTRUMENTENTAFEL	1350
		2	INSTRUMENTENTAFEL	1352
LUFTFILTER (FAHRERHAUS)	7T-1890	1	FAHRERHAUSHEIZUNG	1280
		1	FAHRERHAUSHEIZUNG	1282
	107-0266	1	FAHRERHAUSHEIZUNG	1280
		1	FAHRERHAUSHEIZUNG	1282
SCHEIBENWISCHERBLATT	5C-8811	1	SCHEIBENWISCHER	1456
		1	SCHEIBENWISCHER	1460
	6V-5849	4	SCHEIBENWISCHER	1456
		4	SCHEIBENWISCHER	1460
	6V-5851	1	SCHEIBENWISCHER	1456
		1	SCHEIBENWISCHER	1460
SICHERHEITSGURT	183-3648	1	FAHRERSITZ	1386
		1	FAHRERSITZ	1387
SICHERHEITSGURT ((AUTOMATIKSICHERHEITSGURT))	8Y-3792	1	SCHWINGSITZ	1391
	122-4617	1	FAHRERSITZ	1380
		1	SCHWINGSITZ	1389
		1	SCHWINGSITZ	1392
	156-1148	1	FAHRERSITZ	1381
		1	SCHWINGSITZ	1393
UNTERBRECHER (15 A)	6N-8589	1	KÄLTEMITTELKONDENSATOR U. BEFESTIGUNGSTEILE	1252
	6T-3643	1	KÄLTEMITTELKONDENSATOR U. BEFESTIGUNGSTEILE	1257
		1	KÄLTEMITTELKONDENSATOR U. BEFESTIGUNGSTEILE	1260

WARTUNGSTEILE

BESCHREIBUNG	ERSATZTEIL-NUMMER	MENGE	VERWENDET IN	SEITE
HYDRAULIKSYSTEM				
EINFÜLLSTUTZENKAPPE (HYDRAULIK)	7H-1447	1	HYDRAULIKTANK UND SCHMIERFILTER	998
FILTER (SCHWER ENTFLAMMBARE FLÜSSIGKEIT)	1U-2092	2	HYDRAULIKTANK UND SCHMIERFILTER	998
FILTERSIEB	5D-7927	1	HYDRAULIKTANK UND SCHMIERFILTER	998
O-RING-DICHTUNG	2S-4078	1	HYDRAULIKPUMPE UND LEITUNGEN	942
		1	HYDRAULIKPUMPE UND LEITUNGEN	943
		1	HYDRAULIKPUMPE UND LEITUNGEN	949
		2	HYDRAULIKPUMPE UND LEITUNGEN	956
		1	HYDRAULIKPUMPE UND LEITUNGEN	958
		1	STEUERVENTIL	1026
ÖLFILTERELEMENT (HYDRAULIK/STROMUMKEHRUNG) (NICHT WIEDERVERWENDBAR)	1R-0735	2	HYDRAULIKTANK UND SCHMIERFILTER	998
SCHMIERNIPPEL	3B-8489	2	AUFREISSERHUBZYLINDER	912
		2	AUFREISSERHUBZYLINDER	914
		2	AUFREISSERHUBZYLINDER	916
		2	AUFREISSERHUBZYLINDER	918
		2	AUFREISSERHUBZYLINDER	920
		2	AUFREISSERKIPPZYLINDER	930
		1	DOPPELNEIGEZYLINDER	908
		1	DOPPELNEIGEZYLINDER	910
		1	PLANIERSCHILDKIPPZYLINDER	902
		1	PLANIERSCHILDKIPPZYLINDER	904
		1	PLANIERSCHILDKIPPZYLINDER	906
SCHMIERNIPPEL (1/8-27-GEWINDE)	3B-8489	2	AUFREISSERHUBZYLINDER	922
SIEB	9T-7571	1	HYDRAULIKTANK UND SCHMIERFILTER	998
STAUBKAPPE	6V-0852	1	DRUCKSTEUERVENTIL	1040
		2	HYDRAULIKPUMPE UND LEITUNGEN	943
		2	HYDRAULIKPUMPE UND LEITUNGEN	948
		2	HYDRAULIKPUMPE UND LEITUNGEN	956
	8C-3451	1	HYDRAULIKTANK UND SCHMIERFILTER	998
VORHÄNGESCHLOSS	5P-8502	1	ZUGANGSKLAPPE - HYDRAULIKTANKKAPPE	896
KRAFTSTOFFSYSTEM				
DICHTUNG (KRAFTSTOFFENTLÜFTUNGSPUMPE)	1P-0436	1	KRAFTSTOFF-ENTLÜFTUNGSPUMPE	291
		1	KRAFTSTOFFENTLÜFTUNGSPUMPE UND -HAUPTFILTER	292
		1	KRAFTSTOFFILTER UND LEITUNGEN	246
ENTLÜFTUNGSVORRICHTUNG	6G-7803	1	SCHNELLBETANKUNGSANSCHLUSS	216
FILTER	129-0373	1	KRAFTSTOFFENTLÜFTUNGSPUMPE UND -HAUPTFILTER	292
		1	KRAFTSTOFFILTER UND LEITUNGEN	246
		1	WASSERABSCHEIDER- U. KRAFTSTOFFILTER	252
FILTER (HYDRAULISCHE PUMPENDÜSE)	125-5835	1	HYDRAULIKPUMPENANTRIEB	234
		1	HYDRAULIKPUMPENANTRIEB	242

BESCHREIBUNG	ERSATZTEIL-NUMMER	MENGE	VERWENDET IN	SEITE
		1	HYDRAULIKPUMPENANTRIEB	244
FILTERPATRONE	1Q-2541	1	KRAFTSTOFFTANK	310
FILTERSATZ	1Q-3363	1	KRAFTSTOFFTANK	310
FILTERSATZ (WASSERABSCHEIDER U. KRAFTSTOFFILTER)	1R-0769	1	WASSERABSCHEIDER- U. KRAFTSTOFFILTER	253
KAPPE	6V-9830	1	KRAFTSTOFFILTER	248
		1	KRAFTSTOFFILTER	250
KAPPE (13/16-16-GEWINDE)	6V-9830	1	KRAFTSTOFFILTER UND LEITUNGEN	246
KRAFTSTOFFILTER	1R-0749	2	KRAFTSTOFFILTERLEITUNGEN	264
KRAFTSTOFFKAPPE	101-8909	1	SCHNELLBETANKUNGSANSCHLUSS	216
		1	SCHNELLBETANKUNGSANSCHLUSS	218
KRAFTSTOFFSIEB	9P-7121	1	KRAFTSTOFFTANK	308
KRAFTSTOFFTANK-SIEBEINSATZ	9P-7121	1	KRAFTSTOFFTANK	312
KRAFTSTOFFTANKKAPPE	7X-7700	1	KRAFTSTOFFTANK	308
		1	KRAFTSTOFFTANK	313
KRAFTSTOFFTANKSIEB	6T-7774	1	KRAFTSTOFFILTER	250
		1	KRAFTSTOFFLEITUNGEN	262
MESSSTAB UND KAPPE	1Q-3828	1	KRAFTSTOFFTANK	310
O-RING-DICHTUNG (110,49 MM INNENDURCHMESSER)	9X-8600	1	KRAFTSTOFFTANK	308
SCHLÜSSEL	5P-8500	1	KRAFTSTOFFTANK	308
		1	KRAFTSTOFFTANK	312
STAUBKAPPE	9D-0630	1	SCHNELLBETANKUNGSANSCHLUSS	216
		1	SCHNELLBETANKUNGSANSCHLUSS	218
		1	SCHNELLBETANKUNGSANSCHLUSS	220
		1	SCHNELLBETANKUNGSANSCHLUSS	222
		1	SCHNELLBETANKUNGSANSCHLUSS	224
		1	SCHNELLBETANKUNGSANSCHLUSS	226
VORHÄNGESCHLOSS	5P-8502	1	KRAFTSTOFFILTER	248
		1	KRAFTSTOFFILTER	250
		1	KRAFTSTOFFLEITUNGEN	262
		1	KRAFTSTOFFTANK	308
		1	KRAFTSTOFFTANK	312
		1	SCHNELLBETANKUNGSANSCHLUSS	218
WASSERABSCHEIDER UND KRAFTSTOFFILTER	129-0372	1	KRAFTSTOFFENTLÜFTUNGSPUMPE UND -HAUPTFILTER	292
		1	KRAFTSTOFFILTER UND LEITUNGEN	246
WASSERABSCHEIDER UND KRAFTSTOFFILTER (HAUPTELEMENT)	129-0372	1	WASSERABSCHEIDER- U. KRAFTSTOFFILTER	252
KRAFTÜBERTRAGUNG				
ANSAUGSIEB	3S-3875	1	ÖLLEITUNGEN - KRAFTÜBERTRAGUNG	602
		1	ÖLLEITUNGEN - KRAFTÜBERTRAGUNG	608
		1	ÖLLEITUNGEN - KRAFTÜBERTRAGUNG	614
		1	ÖLLEITUNGEN - KRAFTÜBERTRAGUNG	618
		1	ÖLLEITUNGEN - KRAFTÜBERTRAGUNG	622
	8S-9130	1	DREHMOMENTWANDLER	646

WARTUNGSTEILE

BESCHREIBUNG	ERSATZTEIL-NUMMER	MENGE	VERWENDET IN	SEITE
		1	PLANETENANTRIEBSGEHÄUSE U. TEILE	536
EINFÜLLKAPPE	6N-2985	1	ÖLLEITUNGEN - KRAFTÜBERTRAGUNG	602
		1	ÖLLEITUNGEN - KRAFTÜBERTRAGUNG	608
		1	ÖLLEITUNGEN - KRAFTÜBERTRAGUNG	614
		1	ÖLLEITUNGEN - KRAFTÜBERTRAGUNG	618
		1	ÖLLEITUNGEN - KRAFTÜBERTRAGUNG	622
ENTLÜFTER	9G-5127	1	ÖLLEITUNGEN - KRAFTÜBERTRAGUNG	614
		1	ÖLLEITUNGEN - KRAFTÜBERTRAGUNG	618
		1	ÖLLEITUNGEN - KRAFTÜBERTRAGUNG	622
ENTLÜFTER (DRUCKBEGRENZUNG)	9G-5127	1	ÖLLEITUNGEN - KRAFTÜBERTRAGUNG	603
		1	ÖLLEITUNGEN - KRAFTÜBERTRAGUNG	609
MAGNETSTOPFEN	6V-3298	1	SEITENANTRIEB	558
		1	SEITENANTRIEB	562
		1	SEITENANTRIEB	566
		1	SEITENANTRIEB	570
		1	SEITENANTRIEB	574
		1	SEITENANTRIEB	578
		1	SEITENANTRIEB	582
		1	SEITENANTRIEB	586
		1	SEITENANTRIEB	590
		1	SEITENANTRIEB	594
O-RING-DICHTUNG	2S-4078	1	SEITENANTRIEB	558
		1	SEITENANTRIEB	562
		1	SEITENANTRIEB	566
		1	SEITENANTRIEB	570
		1	SEITENANTRIEB	574
		1	SEITENANTRIEB	578
		1	SEITENANTRIEB	582
		1	SEITENANTRIEB	586
		1	SEITENANTRIEB	590
		1	SEITENANTRIEB	594
	3J-1907	2	ÖLFILTER	554
		2	ÖLFILTER	556
ÖLFILTER	1R-0716	2	ÖLFILTER	550
ÖLFILTERELEMENT	132-8875	1	ÖLFILTER	552
	132-8876	1	ÖLFILTER	554
		1	ÖLFILTER	556
		2	ÖLLEITUNGEN - KRAFTÜBERTRAGUNG	614
		2	ÖLLEITUNGEN - KRAFTÜBERTRAGUNG	618
		2	ÖLLEITUNGEN - KRAFTÜBERTRAGUNG	622

WARTUNGSTEILE

BESCHREIBUNG	ERSATZTEIL-NUMMER	MENGE	VERWENDET IN	SEITE
SCHMIERNIPPEL (1/8-27-GEWINDE)	3B-8489	1	SEITENANTRIEB	582
SCHRAUBE	9S-4191	1	DREHMOMENTWANDLER	646
		2	ÖLFILTER	554
		2	ÖLFILTER	556
		2	STEUERVENTIL	654
		2	STEUERVENTIL	656
		2	STEUERVENTIL	658
		2	ZAHNRADPUMPE	636
SCHRAUBE (1-14X3,75 ZOLL)	9S-1367	10	TELLERRAD- UND VORGELEGERADSATZ	598
STAUBKAPPE	6V-0852	4	GETRIEBESTEUERVENTIL	673
		2	ÖLLEITUNGEN - KRAFTÜBERTRAGUNG	602
		2	ÖLLEITUNGEN - KRAFTÜBERTRAGUNG	603
		2	ÖLLEITUNGEN - KRAFTÜBERTRAGUNG	608
		2	ÖLLEITUNGEN - KRAFTÜBERTRAGUNG	609
		4	ÖLLEITUNGEN - KRAFTÜBERTRAGUNG	614
		4	ÖLLEITUNGEN - KRAFTÜBERTRAGUNG	618
		4	ÖLLEITUNGEN - KRAFTÜBERTRAGUNG	622
		2	PLANETENANTRIEBSGEHÄUSE U. TEILE	536
		1	ÜBERDRUCKVENTIL	666
		1	ÜBERDRUCKVENTIL	668
		1	VORSTEUERVENTIL UND BEFESTIGUNGSTEILE	651
	8C-3445	1	ÖLFILTER	550
	8C-3447	1	ÖLLEITUNGEN - KRAFTÜBERTRAGUNG	603
		1	ÖLLEITUNGEN - KRAFTÜBERTRAGUNG	609
		1	ÖLLEITUNGEN - KRAFTÜBERTRAGUNG	614
		1	ÖLLEITUNGEN - KRAFTÜBERTRAGUNG	618
		1	ÖLLEITUNGEN - KRAFTÜBERTRAGUNG	622

WARTUNGSTEILE

BESCHREIBUNG	ERSATZTEIL-NUMMER	MENGE	VERWENDET IN	SEITE
KÜHLSYSTEM				
ABLASSSTOPFEN	7N-1447	1	KÜHLER	180
FILTER (WASSERPUMPE)	111-2721	1	KÜHLWASSERPUMPE	172
		1	KÜHLWASSERPUMPE	174
		1	KÜHLWASSERPUMPE	176
KEILRIEMEN	135-8654	1	LÜFTER, HÖHENVERSTELLBAR	152
		1	LÜFTER, HÖHENVERSTELLBAR	154
KÜHLERKAPPE	031-1119	1	KÜHLMITTELBEHÄLTER	183
		1	WASSERTANK	184
		1	WASSERTANK	188
KÜHLWASSERZUSATZELEMENT	9Y-1022	1	KÜHLWASSERZUSATZELEMENT	143
LIPPENDICHTUNG	3S-9643	1	KÜHLWASSERLEITUNGEN	158
		1	KÜHLWASSERLEITUNGEN	162
		1	KÜHLWASSERLEITUNGEN	166
SICHERUNG (1/4 A)	137-2082	1	LÜFTER, HÖHENVERSTELLBAR	152
		1	LÜFTER, HÖHENVERSTELLBAR	154
SICHERUNG (15 A)	8M-8948	1	LÜFTER, HÖHENVERSTELLBAR	152
		1	LÜFTER, HÖHENVERSTELLBAR	154
UNTERBRECHER (15 A)	6T-3643	1	LÜFTER, HÖHENVERSTELLBAR	152
WASSERTEMPERATURREGLER	7C-3095	2	KÜHLWASSERLEITUNGEN	166
WASSERTEMPERATURREGLER (92 GRAD CELSIUS)	4W-4794	2	KÜHLWASSERLEITUNGEN	158
		2	KÜHLWASSERLEITUNGEN	162

WARTUNGSTEILE

BESCHREIBUNG	ERSATZTEIL-NUMMER	MENGE	VERWENDET IN	SEITE
LAUFWERK				
ABLASSSTOPFEN	4T-2069	3	LAUFROLLENRAHMEN (TELESKOPRÜCKLAUF)	768
		3	LAUFROLLENRAHMEN (TELESKOPRÜCKLAUF)	770
		6	LAUFROLLENRAHMEN (TELESKOPRÜCKLAUF)	772
		6	LAUFROLLENRAHMEN (TELESKOPRÜCKLAUF)	774
		3	LAUFROLLENRAHMEN (TELESKOPRÜCKLAUF)	776
		3	LAUFROLLENRAHMEN (TELESKOPRÜCKLAUF)	778
		6	LAUFROLLENRAHMEN (TELESKOPRÜCKLAUF)	780
ENTLÜFTER	198-7711	1	SCHMIERVORRICHTUNG - QUERTRAVERSE	796
NIPPEL	1K-6853	4	QUERTRAVERSE	746
ÖLEINFÜLLSTUTZEN	5L-2952	1	SCHMIERVORRICHTUNG - QUERTRAVERSE	796
ÖLSTANDKAPPE	9W-8277	1	ACHSWELLENSCHMIERUNG	798
		1	ACHSWELLENSCHMIERUNG	800
SCHMIERNIPPEL	3B-8489	2	LEITRAD	786
		2	QUERTRAVERSE	746
		2	QUERTRAVERSE	748
		2	QUERTRAVERSE	752
		2	QUERTRAVERSE	757
SCHMIERNIPPEL (1/8-27-GEWINDE)	3B-8489	2	QUERTRAVERSE	754
		2	QUERTRAVERSE	759
		2	QUERTRAVERSE	760
		2	QUERTRAVERSE	761
LENK- UND BREMSSYSTEM				
STAUBKAPPE	6V-0852	4	LENKVENTIL U. BEFESTIGUNGSTEILE	877
LUFTEINLASS- UND ABGASSYSTEM				
FILTER	7M-1674	1	DRUCKLUFTLEITUNGEN	202
		1	DRUCKLUFTLEITUNGEN	203
HAUPTFILTER	106-3969	1	LUFTREINIGER	196
REGENKAPPE	7S-5003	1	STAUBAUSWERFER	197
SICHERHEITSFILTER	106-3973	1	LUFTREINIGER	196
MASCHINE				
BATTERIE (12 V/TROCKEN)	9X-9730	4	KALTWETTERAUSRÜSTUNG	2

WARTUNGSTEILE

BESCHREIBUNG	ERSATZTEIL-NUMMER	MENGE	VERWENDET IN	SEITE
MOTOR (GRUNDAUSFÜHRUNG)				
ABLASSSTOPFEN	5F-0304	1	SCHWUNGRADGEHÄUSE	90
ENTLÜFTER	4N-4668	2	VENTILDECKEL	26
		3	VENTILDECKEL	27
KEILRIEMEN	133-6443	1	KEILRIEMENSATZ	109
KEILRIEMENSATZ (EINSCHL. 4 RIEMEN)	123-5889	1	LÜFTERANTRIEB	57
		1	LÜFTERANTRIEB	58
		1	LÜFTERANTRIEB	59
		1	LÜFTERANTRIEB	62
		1	LÜFTERANTRIEB	63
		1	LÜFTERANTRIEB	64
		1	LÜFTERANTRIEB	65
		1	LÜFTERANTRIEB	66
		1	LÜFTERANTRIEB	75
	133-6445	1	KEILRIEMENSATZ	109
	180-4526	1	LÜFTERANTRIEB	70
		1	LÜFTERANTRIEB	74
		1	LÜFTERANTRIEB	76
O-RING-STOPFEN	9S-4190	1	LÜFTERANTRIEB	74
O-RING-STOPFEN (7/16-20 GEWINDE)	9S-4190	5	ZYLINDERBLOCKSCHRAUBE	101
ÖLABLASSSCHRAUBE	4P-0513	1	ÖLWANNE	96
SCHMIERNIPPEL	3B-8485	1	LÜFTERANTRIEB	70
		1	LÜFTERANTRIEB	76
		1	RIEMENSPANNER	18
STAUBKAPPE	6V-0852	1	ZYLINDERBLOCKSCHRAUBE	101
RAHMEN UND AUFBAU				
SCHRAUBE	106-8187	1	RAHMEN UND GEHÄUSE	678
		1	RAHMEN UND GEHÄUSE	680
		1	RAHMEN UND GEHÄUSE	682
VORHÄNGESCHLOSS	5P-8502	2	MOTORHAUBE UND VERKLEIDUNG	736
		3	MOTORVERKLEIDUNG	694
		1	SCHUTZBLECHE	708
		2	SCHUTZBLECHVERKLEIDUNG	700
		2	SCHUTZBLECHVERKLEIDUNG	704
SCHMIERSYSTEM				
EINFÜLLKAPPE	6N-2206	1	MOTORÖLEINFÜLLSTUTZEN	114
KAPPE	110-8318	1	ÖLSCHNELLWECHSELANSCHLUSS	132
SAUGGLOCKENSIEB	4N-0913	1	MOTORÖLLEITUNGEN	120
STAUBKAPPE	6V-0852	1	ÖLZUFUHRLEITUNGEN	126

INDEX

Name	Page
A	
ACCUMULATOR-AIR CONDITIONER	1260
	1320
ADAPTER GP-FAST FILL FUEL	216
	218
	220
	222
	224
	226
ADJUSTER GP-SEAT	1196
	1197
	1198
ADJUSTER GP-STEER & TMSN CONT	844
AFTERCOOLER GP-WATER	192
AIR CLEANER GP	194
	195
	196
AIR CONDITIONER AR	1200
	1201
AIR CONDITIONER GP	1202
	1206
	1210
ALARM GP	315
ALTERNATOR AR-CHARGING	316
ALTERNATOR GP-CHARGING	318
	320
	322
	324
	326
ARCTIC AR–SEALS & COMPONENTS	1
ARMREST AR	1213
ARMREST GP	1214
ASHTRAY	1280
	1282
AXLE GP-POWER TRAIN	531
	532
	533
	534
B	
BAR AR-STRIKER	744
BAR AR-STRIKER–FRONT	742
BAR GP-EQUALIZER	746
	748
	750
	751
	752
	754
	756
	757
	758
	759
	760
	761
BAR GP-STRIKER	742
	762
	763
BAR GP-STRIKER (LH)	744
BAR GP-STRIKER (RH)	744
BASE-INDICATOR LIGHT	1352
BATTERY & WIRING GP	328
	336
	344
	352
	360
	368
BATTERY (12 VOLT)	328
	336
	344
	354
	362
	370
	476
	480
BATTERY (12 VOLT/DRY)	2
BELT TIGHTENER GP	12
	14
	16
	18
BIT GP-END	1149
BLADE & EDGE GP	1149
	1150
	1151
BLADE AS	1152
BLADE AS-SEMI-UNIVERSAL	1154
BLADE AS-UNIVERSAL	1156
	1157
	1158
BLADE AS-WIPER	1456
	1460
BLADE GP-SEMI-UNIVERSAL	1159
	1160
	1162
	1164
BLADE GP-UNIVERSAL	1166
	1168
	1170
	1172
BLOCK GP-PUSH	1060
	1061
	1062
	1063
BOLT (1-14X3.75 IN)	598
BRACE GP-BULLDOZER	1064
BREATHER	614
	618
	622
	796

INDEX

Name	Page
	1070
	1102
BREATHER AS	26
	27
BREATHER (PRESSURE RELIEF)	603
	609
BRUSH AS	494
BRUSH AS (STARTING MOTOR)	484
BULLDOZER AR	1065
	1066
	1067
	1068
BYPASS GP-FILTER	1069

C

Name	Page
CAB AR	1216
	1218
	1220
	1221
	1222
	1224
	1225
	1226
	1228
CAB AR-COLD WEATHER	1230
	1232
CAB GP	1234
	1237
CAMSHAFT GP	20
CAP	132
CAP-AIR CONDITIONER VALVE (7/16 X 20 THD)	1264
CAP AS	248
	250
CAP AS-DUST	410
CAP AS-FILLER	114
	602
	608
	614
	618
	622
CAP AS-FUEL TANK	308
	313
CAP AS-FUEL TANK FILLER	216
	218
CAP AS-OIL FILLER	796
CAP AS-OIL LEVEL	798
	800
CAP AS-RADIATOR	183
	184
	188
CAP AS-RAIN	197
CAP AS (13/16-16 THD)	246
CAP-CONNECTOR	506
	508
CAP-DUST	101
	126
	216
	218
	220
	222
	224
	226
	536
	550
	602
	603
	608
	609
	614
	618
	622
	651
	666
	668
	673
	877
	943
	948
	956
	998
	1040
CAP-FILLER (HYDRAULIC)	998
CAP-FUSE HOLDER	506
	508
	512
	516
CAP GP-TRACK IDLER	764
	765
CAP GP-TRACK ROLLER	766
CAP-RECEPTACLE	506
	508
	512
	516
CAP-VENTED	1424
CARTRIDGE-FILTER	310
CARTRIDGE GP-TURBOCHARGER	212
	215
CARTRIDGE GP-VANE PUMP	882
	883
CASE & FRAME GP	678
	680
	682
CASE & PARTS GP-PLANETARY	536
CASE GP-WINCH	1070
CIRCUIT BREAKER AS (10 AMP)	506
	512
	516
CIRCUIT BREAKER AS (10 AMP) (AUX)	509

INDEX

Name	Page
CIRCUIT BREAKER AS (10 AMP) (ENGINE START)	509, 512, 516
CIRCUIT BREAKER AS (10 AMP) (KEY)	508
CIRCUIT BREAKER AS (105 AMP)	506
CIRCUIT BREAKER AS (105 AMP) (ALTERNATOR)	508, 512, 516
CIRCUIT BREAKER AS (105 AMP) (MAIN)	508, 512, 516
CIRCUIT BREAKER AS (15 AMP)	152, 506, 512, 516, 1252, 1257, 1260
CIRCUIT BREAKER AS (15 AMP) (BLOWER)	509
CIRCUIT BREAKER AS (15 AMP) (ENGINE)	508, 512, 516
CIRCUIT BREAKER AS (15 AMP) (FAN MOTOR)	512, 516
CIRCUIT BREAKER AS (15 AMP) (HEAD LAMP)	508
CIRCUIT BREAKER AS (15 AMP) (HEADLIGHT)	512, 516
CIRCUIT BREAKER AS (15 AMP) (POWER OUTLET)	509, 512, 516
CLUTCH & BRAKE GP-STEERING	848, 850
CLUTCH & GEAR GP	1074
COLD WEATHER AR–LUBRICANT	1
COMPRESSOR GP-REFRIGERANT	1238, 1239, 1240, 1241, 1242, 1244, 1246, 1248
CONDENSER & MTG GP-REFRIGERANT	1250, 1252, 1256, 1260
CONDENSER GP-REFRIGERANT	1264, 1266, 1268
CONTROL & MTG GP-ELECTRONIC	376, 377, 378
CONTROL & MTG GP-ENGINE ELEK	379, 380
CONTROL & MTG GP-TRANSMISSION	538
CONTROL AR-DUAL TILT	884
CONTROL AR-HYDRAULIC	886, 888, 890, 892
CONTROL AS-ELECTRONIC (DASH LIGHT)	1350, 1352
CONTROL GP-BRAKE	852, 854, 856
CONTROL GP-DECELERATOR	228, 230, 232
CONTROL GP-ELECTRONIC	381, 382, 383, 860
CONTROL GP-ENG RATINGS ELEK	384, 385, 386
CONTROL GP-ENGINE ELECTRONIC	387, 388, 389, 390
CONTROL GP-MONITOR (CATERPILLAR MONITORING SYSTEM)	1352
CONTROL GP-MONITOR SYS DIMMER	1269
CONTROL GP-MONITORING	1350
CONTROL GP-PARKING BRAKE	858
CONTROL GP-POWER TRAIN	391
CONTROL GP-STEERING & TMSN	860, 862, 864, 866
CONTROL GP-TOWING WINCH	1082
CONTROL GP-TRANSMISSION HYD	540, 542, 544
CONTROL GP-UNPROGRAMMED	377, 392, 393, 471
CONTROL GP-UNPROGRAMMED–POWER TRAIN	394
CONTROL GP-WATER	1270
CONTROL GP-WINCH	1086
CONVERSION AR	1271
CONVERTER GP-ELECTRICAL	395
COOLANT CONDITIONER GP	143

INDEX

Name	Page
	144
COOLANT HEATER LINES	1324
COOLER GP-ENGINE OIL	145
COOLER GP-HYDRAULIC OIL	893
	894
COOLER GP-TRANSMISSION OIL	546
CORE AS-OIL COOLER (ENGINE)	145
	163
	167
CORE GP-OIL COOLER	146
	163
	167
COUNTERWEIGHT & BAR AR-REAR	684
COUNTERWEIGHT GP	688
COUNTERWEIGHT GP–FRONT	689
COUNTERWEIGHT GP–REAR	686
COUPLING GP-PUMP	547
COVER GP-CYLINDER BLOCK	21
	22
COVER GP-FLYWHEEL HOUSING	23
COVER GP-FRONT HOUSING	24
COVER GP-HYDRAULIC TANK CAP	896
COVER GP-SHIPPING	1088
COVER GP-TRUNNION	690
COVER GP-VALVE MECHANISM	26
	27
CRANKSHAFT GP	28
	30
	32
CYLINDER & LINES GP-DUAL TILT	897
CYLINDER AR-DUAL TILT	897
CYLINDER AS (ETHER)	474
CYLINDER BLOCK AS	34
	36
CYLINDER BLOCK GP	38
	40
CYLINDER GP-BULLDOZER LIFT	898
	900
	1000
	1002
	1006
	1010
	1012
CYLINDER GP-BULLDOZER TILT	902
CYLINDER GP-BULLDOZER TILT–LH	906
CYLINDER GP-BULLDOZER TILT–RH	904
CYLINDER GP-BULLDOZER TILT (LH)	897
CYLINDER GP-BULLDOZER TILT (RH)	897
CYLINDER GP-DUAL TILT–LH	910
CYLINDER GP-DUAL TILT–RH	908
CYLINDER GP-RIPPER LIFT	920
	922
CYLINDER GP-RIPPER LIFT–LH	912
	914
CYLINDER GP-RIPPER LIFT–RH	916
	918
CYLINDER GP-RIPPER LIFT (LH)	1133
	1134
	1135
CYLINDER GP-RIPPER LIFT (RH)	1133
	1134
	1135
CYLINDER GP-RIPPER PIN PULLER	924
CYLINDER GP-RIPPER TILT	926
	928
	930
CYLINDER HEAD AS	41
	42
	43
	44
CYLINDER HEAD GP	45
	46
	48
	50
	52
	54

D

DAMPER GP	56
DETENT GP	868
DRAIN GP-ECOLOGY	548
DRAWBAR GP	692
DRIVE GP-FAN	57
	58
	59
	60
	61
	62
	63
	64
	65
	66
	67
	68
	70
	72
	73
	74
	75
	76
DRIVE GP-FAN (ARTIC)	1
DRIVE GP-UNIT INJ HYD PUMP	234
	236
	237
	238
	239
	240
	242
	244

INDEX

Name	Page
DRIVE GP-WINCH	1174
DUST EJECTOR GP	197

E

EDGE GP-BIT & CUTTING	1175
	1176
	1177
	1178
	1179
	1180
	1181
	1182
ELECTRONICS AR-MACHINE	1
ELECTRONICS GP-POWER TRAIN	396
ELEMENT AS-COOLANT CONDITIONER	143
ELEMENT AS-JACKET WATER HEATER	411
	412
ELEMENT AS-JACKET WATER HEATER (120 VOLTS/1500 WATTS)	410
ELEMENT AS-PRIMARY	196
ELEMENT AS-SECONDARY	196
ELEMENT-FILTER	202
	203
	246
	252
	292
	1086
ELEMENT-FILTER (FIRE RESISTANT FLUID)	998
ENCLOSURE GP-ENGINE	694
	698
ENCLOSURE GP-FENDER	700
	702
	704
ENGINE AR	6
	8
	10
EXTENSION GP-BACKREST	1386
	1387
EXTENSION GP-BACKREST–CLOTH	1272
EXTENSION GP-BACKREST–VINYL	1273

F

FAIRLEAD GP-WINCH	1089
FAN-ALTERNATOR	322
FAN AR–VARIABLE SPEED	147
FAN AR-VARIABLE	148
	149
FAN GP-BLOWER	150
	151
FAN GP-DEFROSTER	1274
FAN GP-VARIABLE PITCH	152
	154
FASTENER AR-DISCONNECT KEY	397
FASTENER GP-OIL PUMP MOUNTING	113
FENDER AR	706
FENDER GP	708
FILLER GP-ENGINE OIL	114
FILM	858
FILM-CAT	1194
	1195
FILM-FUSE	513
	517
FILM GP	1465
	1466
FILM-HEATER	398
	402
FILM-IDENTIFICATION	1350
FILM-IDENTIFICATION (FUSE)	154
	506
	508
FILM-IDENTIFICATION (GROUP & SEQUENCE NO.)	1202
	1206
	1210
	1264
	1266
	1286
	1290
	1294
FILM-INSTRUCTION	886
	1456
	1460
FILM (INSTRUCTION) (DOZER CONTROL)	1110
FILM-INSTRUCTION (DOZER CONTROL)	1468
FILM-INSTRUCTION (RIPPER CONTROL)	1108
FILM-INSTRUCTION (RIPPER PIN PULLER SWITCH)	888
	890
FILM-INSTRUCTION (SEAT ADJUSTMENT)	1408
	1414
	1418
FILM-INSTRUCTION (WATER IN/WATER OUT)	1202
	1206
	1210
	1286
	1290
	1294
FILM-MONITOR	1350
	1352
FILM-NO STEP	398
	402
FILM-NOTICE	2
	1278
	1336
FILM-NOTICE (PRELUBRICATION PUMP)	134
	136
	138

INDEX

Name	Page
FILM-NOTICE (RADIO)	1305
FILM-NOTICE (VENT VALVE)	2
FILM-OPERATOR SOUND	3
	1402
FILM-PANEL	1280
	1282
	1350
	1352
FILM (SEAT CUSHION IDENTIFICATION)	1346
	1347
FILM-WARNING	768
	770
	772
	774
	776
	778
	780
FILM-WASTE HANDLER	1465
FILTER & LINES GP-FUEL	246
FILTER-AIR (CAB)	1280
	1282
FILTER AS	310
FILTER AS-ENGINE OIL	550
FILTER AS-FUEL	264
FILTER AS-WATER SEP & FUEL	246
	292
FILTER AS-WATER SEP & FUEL (PRIMARY)	252
FILTER AS (WATER SEPARATOR & FUEL)	253
FILTER ELEMENT AS-OIL	552
	554
	556
	614
	618
	622
FILTER ELEMENT AS-OIL (HYDRAULIC/REVERSE FLOW) (DISPOSABLE)	998
FILTER-FOAM	330
	337
	345
	354
	362
	370
FILTER GP-FUEL	248
	250
FILTER GP-OIL	550
	552
	554
	556
FILTER GP-WATER SEP & FUEL	252
	253
	254
FILTER-MAGNETIC	1136
FILTER (UNIT INJECTOR HYDRAULIC PUMP)	234
	242
	244
FILTER (WATER PUMP)	172
	174
	176
FINAL DRIVE GP	558
	562
	566
	570
	574
	578
	582
	594
FINAL DRIVE GP– DU-CONE GUARD & PACKING SEAL	586
	590
FITTING	746
FITTING AS-AIR CONDITIONER	1260
	1320
FITTING-GREASE	18
	70
	76
	746
	748
	752
	757
	786
	824
	826
	828
	834
	902
	904
	906
	908
	910
	912
	914
	916
	918
	920
	930
	1089
	1090
	1092
	1094
	1096
	1098
	1103
	1104
	1114
FITTING-GREASE (1/8-27 THD)	582
	754
	759
	760

INDEX

Name	Page
	761
	922
	1064
FLOOR MAT	1354
	1358
FLOOR MAT-LOWER	1334
FLOOR MAT-LOWER SPECIAL	1338
	1340
	1342
FLOOR MAT-UPPER	1334
FLOOR MAT-UPPER SPECIAL	1338
	1340
	1342
FLOORPLATE AR	1276
FLYWHEEL GP	78
FRAME AS-TELESCOPING RECOIL	767
FRAME GP-RIPPER	1090
	1092
	1094
	1096
	1098
FRAME GP-TELESCOPING RECOIL	768
	772
	774
	776
	778
	780
FRAME GP-TELESCOPING RECOIL–LH	770
FUMES DISPOSAL GP	116
FUSE	398
FUSE (10 AMP)	506
	508
	513
	517
FUSE (1/4 AMP)	152
	154
FUSE (15 AMP)	152
	154
	506
	508
	513
	517
FUSE (20 AMP)	506
	508
	512
	516

G

Name	Page
GASKET (FUEL PRIMING PUMP)	246
	291
	292
GAUGE & CAP AS	310
GAUGE GP-OIL LEVEL (DIPSTICK)	118
GEAR GP-ACCESSORY	1100
GEAR GP-BEVEL & TRANSFER	598
GEAR GP-FRONT–TIMING	80
GEAR GP-REAR	82
	86
GEAR GP-STEERING	870
	872
GLASS-FIXED-LH (TINTED)	1443
GLASS-FIXED-RH (TINTED)	1442
GLASS-SLIDER (LH) (TINTED)	1444
GLASS-SLIDER-RH (TINTED)	1446
GLASS (TINTED)	1234
	1436
	1437
	1447
	1448
GLASS (TINTED)(GREEN)	1449
	1450
GRID GP-SAND BLAST ERODING	713
GUARD AR-FINAL DRIVE	714
GUARD AR-HINGED	716
GUARD AR-IDLER	718
GUARD GP-BOTTOM	720
	722
GUARD GP-DRIVE SHAFT	600
GUARD GP-PIVOT SHAFT	724
GUARD GP-RADIATOR	726
	728
GUARD GP-REAR	730
GUARD GP-ROCK	732
	733
GUARD GP-SEAL	734
	735
GUARD GP-VANDALISM	1277
GUIDE GP-ROLLER	1101

H

Name	Page
HARNESS AS (PRESSURE SENSOR)	457
HARNESS AS (SOCKET) (PRESSURE SENSOR)	457
HEATER AR	1278
HEATER GP	398
	1280
	1282
HEATER GP-CAB	1280
	1282
	1286
	1290
	1294
HEATER GP-COOLANT	398
	402
HEATER GP-FUEL	406
	408
HEATER GP-JACKET WATER	402
	410

INDEX

Name	Page
	411
	412
HOLDER AS-BRUSH	495
HOLDER AS-BRUSH (STARTING MOTOR BRUSH)	484
HOLDER AS-FUSE	506
	508
	512
	516
HOOD & GUARD GP	736
HORN AS (24 VOLT)(HIGH TONE)	328
	336
	344
	352
	360
	368
HORN AS (24 VOLT)(LOW TONE)	328
	336
	344
	352
	360
	368
HOSE AS (ARCTIC)	939
HOUSING GP-FLYWHEEL	90
HOUSING GP-FRONT	92
	93
HOUSING GP-SEAT SUSPENSION	1298
	1302

I

IDLER AR-TRACK	782
IDLER GP-TRACK	783
	784
	786
	788
	790
INJECTOR GP-FUEL	255
	256
	257
	258
	259
	286
INSERT-VALVE SEAT (EXHAUST)	42
INSERT-VALVE SEAT (INTAKE)	42
INSTALLATION AR-WINCH	1102
INSTALLATION GP-RADIO	1305

J

JUNCTION BLOCK GP	413

K

KEY	308
	312
KEY (BATTERY DISCONNECT)	499
KIT-ADJUSTER (SEAT PAN)	1348
KIT-AIR SPRING	1410
KIT-ALTERNATOR TERMINAL	320
	322
KIT-BACK TILT (SEAT PAN)	1348
KIT-BEARING	1299
	1303
KIT-BEARING (STARTER)	494
KIT-BEARING (YOKE)	302
KIT-BEARING (YOKE)(UNIT INJECTOR HYD PUMP)	300
	306
KIT-BELT TETHER	1408
	1418
KIT-BRUSH	1203
	1206
	1287
	1291
KIT-BUMPER	1298
	1302
KIT-CAP FILTER (FUEL TANK)	308
	313
KIT-CARTRIDGE (REAR)	994
	996
KIT-CATCH	1444
	1446
KIT-COMPENSATOR (UNIT INJECTOR HYDRAULIC PUMP)	300
	302
	306
KIT-COMPRESSOR	1410
KIT-CONNECTING PLUG (12 PIN)	1257
KIT-CONNECTING PLUG (2 PIN)	134
	136
	138
	352
	360
	368
	444
	672
	844
	1203
	1256
	1287
	1291
KIT-CONNECTING PLUG (3 PIN)	48
	50
	52
	453
	454
	455
	456
	459

INDEX

Name	Page
	460
	464
	1257
KIT-CONNECTING PLUG (3 PIN) (ENGINE SPEED TIMING SENSOR)	465
KIT-CONNECTING PLUG (3 PIN) (PRESSURE SENSOR)	457
	458
	461
	462
KIT-CONNECTING PLUG (4 PIN)	352
	360
	368
	506
	508
	512
	516
	1428
	1432
KIT-CONNECTING PLUG (6 PINS)	1202
	1206
	1286
	1290
	1428
	1432
KIT-CONNECTING PLUG (8 PIN)	522
KIT-CUSHION (BACKREST EXTENSION)	1272
KIT-CUSHION (VINYL BACK REST)	1273
KIT-FAN BLADE	152
KIT-FASTENER	1410
	1414
KIT-FOLLOWER	1298
	1299
	1303
KIT-FUEL FILTER & WATER SEP	246
	252
	292
KIT-FUEL INJECTION PUMP (REBUILD)(UNIT INJ HYD PUMP)	300
	302
KIT-HARDWARE	1054
	1203
	1287
	1291
KIT-HOUSING	1410
KIT-HYDRAULIC CYLINDER SEAL	900
	902
	926
	928
KIT-INDICATOR	1299
	1302
KIT-INSTALLATION	198
KIT-LEAF SPRING	1442
	1443
KIT-MOTOR BRUSH	1264
KIT-OVERHAUL	60
	72
KIT-OVERPACK	1102
	1104
KIT-PLUG (UNIT INJECTOR HYDRAULIC PUMP)	300
	302
	306
KIT-PUMP REBUILD (WATER)	176
KIT-PUMP (REBUILD)(UNIT INJ HYD PUMP)	306
KIT-REBUILD– FINGER TIP CONTROL GEARBOX	1306
KIT-RECEPTACLE (12 PIN)	858
	1257
KIT-RECEPTACLE (2 PIN)	74
	134
	136
	138
	152
	154
	315
	328
	329
	336
	344
	345
	352
	353
	360
	361
	368
	369
	416
	417
	443
	444
	466
	467
	474
	480
	498
	522
	526
	658
	844
	1051
	1052
	1053
	1056
	1202
	1203
	1206
	1211
	1256
	1260

INDEX

Name	Page
	1264
	1266
	1286
	1287
	1290
	1291
	1294
	1308
	1312
	1316
	1320
	1410
	1414
KIT-RECEPTACLE (3 PIN)	74
	152
	154
	158
	162
	166
	264
	414
	446
	447
	448
	449
	450
	451
	452
	463
	468
	469
	470
	888
	890
	1110
	1257
	1280
	1282
	1428
	1432
KIT-RECEPTACLE (4 PIN)	445
	880
	1047
	1048
	1049
	1054
	1320
	1428
	1432
KIT-RECEPTACLE (6 PIN)	504
	876
	1202
	1206
	1211
	1269
	1280
	1282
	1286
	1290
	1294
	1330
	1331
	1332
	1452
	1454
	1456
	1460
KIT-RELAY TERMINAL	322
KIT-RELAY TERMINAL (ALTERNATOR)	320
KIT-RETAINING BOLT	392
	393
	394
KIT-ROLLER	1410
	1414
KIT-RUNNER GUIDE	1444
	1446
KIT-SEAL	60
	72
	260
	294
	296
	297
	660
	671
	880
	1043
	1047
	1048
KIT-SEAL (FAN DRIVE SOLENOID VALVE)	1052
KIT-SEAL (SOLENOID VALVE)	1050
	1053
	1056
KIT-SEAL (UNIT INJECTOR HYDRAULIC)	298
KIT-SEAL (UNIT INJECTOR HYDRAULIC PUMP)	300
	302
	306
KIT-SEAT CUSHION (SUSPENSION SEAT)	1374
KIT-SEAT CUSHION (VINYL)	1372
KIT-SEAT KNOB	1372
KIT-SEAT KNOB (SUSPENSION SEAT)	1374
KIT-SEAT TILT (SEAT PAN)	1348
KIT-SLIDER BLOCK	1388
	1389
	1390
	1391
	1392
	1393
	1397
	1398

INDEX

Name	Page
	1399
	1400
	1401
KIT-SPRING	1298
	1302
KIT-STARTING MOTOR GEAR	495
KIT-SUSPENSION BOOT	1408
	1418
KIT-SUSPENSION KNOB	1298
	1302
KIT-SUSPENSION ROLLER	1408
	1418
KIT-TERMINAL	489
	495
KIT-TERMINAL (STARTING MOTOR)	485
KIT-TETHER	1410
	1414
KIT-TILT PAN	1372
KIT-TILT PAN (SUSPENSION SEAT)	1374
KIT-VANE	882
	883
	994
	996
KIT-VENT	218
KIT-WATER PUMP REBUILD	172
	174
KIT-WINDOW	1306
KIT-WIPER BLADE	1457
	1461
KIT-WIRING HARNESS (AIR SUSPENSION SEAT)	1410
	1414
KNOB	1235
	1460
KNOB (ARMREST ADJUSTMENT)	844
KNOB-CONTROL	1280
	1282
KNOB-HORN	522
	527
KNOB-LUMBAR	1347

L

Name	Page
LAMP GP-DOME	414
LAMP GP-DOME (24 VOLT)(WITH SWITCH)	1234
LAMP GP-FLOOD	415
	416
	417
	418
	419
LAMP GP-FLOOD (24 VOLT) (SUSPENDED)	427
	428
LAMP GP-FLOOD (24 VOLT)(SUSPENDED)	426
	429
LAMP GP-FLOOD (24 VOLT)(VERTICAL)	431
	432
LAMP-HEAD (24 VOLT) (FLOODLIGHT)	418
	419
LAMP (24 VOLT)	522
	526
	1352
LAMP (24 VOLT) (DOME)	414
LAMP (24 VOLT) (FLOOD)	415
LAMP (24 VOLT) (65 WATT)	416
LAMP (24 VOLT)(65 WATT)	417
LAMP (28 VOLT)	1350
LANYARD	397
LATCH GP	741
LENS AS-FLOOD	417
LENS AS (FLOODLIGHT)	415
	416
	418
	419
LENS (DOME LAMP)	414
LENS-RED	1350
	1352
LIFTING GP-ENGINE	94
LIGHTING AR	420
	422
LIGHTING AR-REAR	424
	425
LIGHTING GP	426
LIGHTING GP-AUXILIARY	427
	428
LIGHTING GP-FLOOD	429
	430
	431
	432
LIGHTING GP-FRONT	434
	435
	436
	437
	438
LIGHTING GP-REAR	439
	440
LIGHTING GP-RIPPER	442
LINER GP-CAB	1307
LINES GP-AIR	200
	202
	203
LINES GP-AIR CONDITIONER	1308
	1312
	1316
	1320
LINES GP-ARCTIC	932
LINES GP-ENGINE OIL	120
LINES GP-FUEL	262
LINES GP-FUEL FILTER	264
LINES GP-HEATER	1324
LINES GP-INJECTOR HYD PUMP	268

INDEX

Name	Page
LINES GP-LIFT CYLINDER	934
	936
LINES GP-OIL SUPPLY	124
	126
LINES GP-PIN PULLER CYLINDER	937
	938
	939
	940
LINES GP-POWER TRAIN OIL	602
	608
	614
	618
	622
LINES GP-PUMP	942
	948
	956
LINES GP-RIPPER	964
	968
	970
LINES GP-TILT	971
LINES GP-TILT CYLINDER	972
	974
	976
	978
	982
LINES GP-TURBOCHARGER OIL	130
LINES GP-WATER	156
	158
	161
	162
	166
LINES GP-WINCH	986
	988
LINK AS-TRACK	792
	793
	794
LINK GP-STABILIZER	1106
	1107
LINKAGE GP-IMPLEMENT	1108
	1110
	1112
LUBRICANT-BEARING	73
LUBRICATION GP-EQUALIZER BAR	796
LUBRICATION GP-PIVOT SHAFT	798
	800

M

MACHINE AR-COLD WEATHER	2
MAGNETIC PICKUP GP	443
MANIFOLD & VALVE GP	626
	627
	874
	875
MANIFOLD GP-EXHAUST	204
	205
MIRROR GP-REAR VIEW	1326
	1327
MODIFICATION AR	2
	3
MODULE AS-OPERATOR	1328
	1329
MODULE GP-QUAD GAUGE	1330
	1331
MODULE GP-SPEEDOMETER & TACH	1332
MONITOR-DISPLAY	152
	154
MOTOR GP-ELECTRIC	1266
MOTOR GP-ELECTRIC (27 VOLT)	1211
	1294
MOUNTING GP-CAB	1334
MOUNTING GP-CB	1336
MOUNTING GP-CYLINDER	1114
MOUNTING GP-PUMP	1115
MOUNTING GP-RIPPER	1116
	1118
	1120
	1122
MOUNTING GP-ROPS	1337
MOUNTING GP-TRANSMISSION	628
MOUNTING GP-WINCH	1124
MUFFLER GP	206

O

OIL CHANGE GP-HIGH SPEED	132
OPERATOR AR-SPECIAL	1338
	1340
	1342

P

PADLOCK GP	218
	248
	250
	262
	308
	312
	477
	481
	694
	700
	704
	708
	736
	896
PAN GP-BACKREST	1344
	1345
	1346
	1347

INDEX

Name	Page
PAN GP-BACKREST (BACK)	1372
PAN GP-OIL	96
PAN GP-SEAT	1348
PAN GP-SEAT (BOTTOM)	1372
PANEL GP-INSTRUMENT	1350
	1352
PISTON & ROD GP	98
	99
PLANETARY GP-TRANSMISSION	630
PLATE & FILM GP	1468
PLATE GP-WEAR	1183
	1184
PLATE-INSTRUCTION (AIR CONDITIONER)	1200
	1201
PLATE-NOTICE (HEATERS)	398
	402
PLATE-SERVICE INFORMATION	1468
PLATE-WARNING (ENG COOLANT HEATER)	398
	402
PLATE-WARNING (RECOIL SPRING)	744
	768
	770
	772
	774
	776
	778
	780
	848
PLATE-WARNING (RECOIL SPRING OIL)	768
	770
	772
	774
	776
	778
	780
PLATFORM GP-CAB	1354
	1358
PLUG	554
	556
	636
	646
	654
	656
	658
	678
	680
	682
PLUG-DRAIN	90
	180
	768
	770
	772
	774
	776
	778
	780
	1070
PLUG GP-CYLINDER BLOCK	100
	101
PLUG GP-CYLINDER HEAD	102
PLUG-MAGNETIC	558
	562
	566
	570
	574
	578
	582
	586
	590
	594
PLUG-O-RING	74
PLUG-O-RING (7/16-20 THD)	101
PLUG-OIL DRAIN	96
PLUG-PIPE	399
PRECLEANER AR	207
	208
PRECLEANER GP	207
	208
	209
PRELUBRICATION AR-ENGINE	134
	136
	138
PULLER AR-PIN	1125
PULLER GP-PIN	1126
	1128
PULLEY-ALTERNATOR	324
	326
PULLEY GP-CRANKSHAFT	103
	104
PUMP & LINES AR	990
PUMP & MTG GP-UNIT INJ HYD	270
	272
	274
	276
	278
	280
	282
	284
PUMP-COOLANT	398
PUMP GP-ENGINE OIL	140
PUMP GP-FUEL INJECTION	286
	287
	288
	289
	290
PUMP GP-FUEL PRIMING	291
PUMP GP-FUEL PRM & PRIM FILTER	292
PUMP GP-FUEL TRANSFER	294
	296
	297

INDEX

Name	Page
	298
	300
	302
	304
PUMP GP-GEAR	634
	636
	637
	638
	991
	992
PUMP GP-UNIT INJECTOR HYD	294
	296
	297
	298
	300
	302
	304
	306
PUMP GP-VANE	994
	996
PUMP GP-WATER	169
	170
	171
	172
	174
	176
PUSH ARM GP	1130
PUSH ARM GP-LH	1131
PUSH ARM GP-RH	1132

R

Name	Page
RADIATOR GP	178
	180
RECEIVER-DRYER GP (AIR CONDITIONER)	1320
RECEIVER-DRYER GP (REFRIGERANT)	1253
	1256
	1260
	1308
	1312
	1316
RECLINER GP-SEAT	1362
REGULATOR-WATER TEMPERATURE	166
REGULATOR-WATER TEMPERATURE (92 DEG C.)	158
	162
RIPPER AR	1133
	1134
	1135
RIPPER GP	1185
	1186
	1187
	1188
	1189
	1190
ROCKER ARM GP	105
ROLLER AR-TRACK CARRIER	802
	803
	804
ROLLER GP-TRACK-DOUBLE FLANGE	805
	806
	807
	808
	809
ROLLER GP-TRACK-SINGLE FLANGE	810
	811
	812
	813
	814
ROPS AS	1363
ROPS GP	1364
	1365

S

Name	Page
SCREEN AS	998
SCREEN AS-BELL	120
SCREEN-FUEL TANK	250
	262
SCREEN GP-MAGNETIC	1136
SCREEN GP-PROTECTION	1366
SCREEN-SUCTION	536
	602
	608
	614
	618
	622
	646
	1136
SEAL GP	172
	174
SEAL GP-CRANKSHAFT	28
	30
	32
SEAL-LIP	158
	162
	166
SEAL-O-RING	554
	556
	558
	562
	566
	570
	574
	578
	582
	586
	590
	594
	942

INDEX

Name	Page
	943
	949
	956
	958
	1026
SEAL-O-RING (110.49MM ID)	308
SEAT AR	1367
SEAT BELT GP	1370
	1386
	1387
	1390
SEAT BELT GP–OPERATOR	1368
	1369
SEAT BELT GP (RETRACTABLE)	1379
	1380
	1381
	1388
	1389
	1391
	1392
	1393
SEAT GP	1374
	1376
	1377
	1378
	1379
	1380
	1381
	1382
	1384
	1386
	1387
SEAT GP–VINYL	1372
SEAT GP (LUMBAR)	1379
	1381
	1388
	1389
	1390
SEAT GP (LUMBAR) (CLOTH)	1380
SEAT GP-SUSPENSION	1376
	1377
	1388
	1389
	1390
	1391
	1392
	1393
	1396
	1397
	1398
	1399
	1401
SEAT GP-SUSPENSION–CLOTH	1394
SEAT GP-SUSPENSION–VINYL	1400
SEAT GP-SUSPENSION (LUMBAR)	1220
SEAT GP (VINYL)(LUMBAR)	1391
	1392
	1393
SEGMENT GP-SPROCKET	639
	640
SENSOR GP-ARC SUPPRESSOR	134
	444
SENSOR GP-FUEL LEVEL–ULTRASONIC	445
SENSOR GP-POSITION	446
	447
	448
	449
	450
	451
	452
SENSOR GP-POSITION (BRAKE)	852
	854
SENSOR GP-POSITION (DECELERATOR)	228
SENSOR GP-POSITION (DIRECTION)	862
	864
SENSOR GP-POSITION (STEER POSITION)	860
SENSOR GP-PRESSURE	202
	453
	454
	455
	456
	457
	458
	459
	460
	461
	462
SENSOR GP-PRESSURE (ATMOSPHERIC)	238
	240
SENSOR GP-PRESSURE (BOOST AIR)	48
	50
	52
	54
SENSOR GP-PRESSURE (ENGINE OIL)	284
SENSOR GP-PRESSURE (INJECTION ACTUATION)	50
SENSOR GP-PRESSURE (TURBO INLET)	203
SENSOR GP-SPEED	92
	93
	345
	443
	466
	467
SENSOR GP-SPEED–ENGINE SPEED/TIMING	464
	465
SENSOR GP-SPEED–FAN	463
SENSOR GP-SPEED (FAN)	60
	72
SENSOR GP-SPEED (ODOMETER)	329

INDEX

Name	Page
	336
	353
	361
SENSOR GP-TEMPERATURE	158
	162
	166
	469
	470
SENSOR GP-TEMPERATURE–ENGINE OIL	468
SENSOR GP-TEMPERATURE (FUEL)	264
SENSOR GP-TEMPERATURE (HYDRAULIC OIL)	346
	354
	362
	370
SENSOR GP-TEMPERATURE (POWER TRAIN OIL)	346
SENSOR GP-TEMPERATURE (POWERTRAIN OIL)	352
	360
	368
SENSOR-TEMPERATURE	152
	398
SENSOR-TEMPERATURE (COOLANT)	154
SERVICE GP-POWER TRAIN	471
SHAFT GP-MAIN DRIVE	641
SHIELD GP-MANIFOLD	210
SLEEVE-CABLE SPLICE	397
SLIDE	1438
	1449
SOCKET AS-POWER (24 VOLT OUTLET)	522
	526
SOFTWARE GP-POWER TRAIN	396
	471
SOFTWARE GP-POWER TRAIN (SOFTWARE ONLY)	396
SOLENOID AS	494
SOLENOID AS (STARTING MOTOR)	484
SOLENOID AS-STARTING MOTOR	472
	488
SPIDER & BEARING GP	649
SPRING	494
	495
SPRING (STARTING MOTOR BRUSH)	484
	485
STARTING AID GP-ETHER	474
STARTING AR-COLD WEATHER	476
	480
STARTING MOTOR GP-ELECTRIC	484
	488
	491
	492
	494
STRAINER AS	998
STRAINER-FUEL	308
STRAINER-FUEL TANK	312
SUPPORT GP-CONTROL	876
SUPPORT GP-ENGINE	106
SUPPORT GP-ENGINE–FRONT	107
SUPPRESSION AR-SOUND	3
	1402
SUSPENSION GP	816
SUSPENSION GP-BOGIE	815
	817
	818
	820
SUSPENSION GP-SEAT	1404
	1408
	1410
	1418
SUSPENSION GP-SEAT–AIR	1414
SWITCH AS	504
SWITCH AS (FRONT LIGHT)	523
	527
SWITCH AS-LIMIT (BRAKE)	852
	854
	856
SWITCH AS-LIMIT (REVERSE)	860
	862
	864
SWITCH AS-MAGNETIC (MAIN RELAY)	506
	508
	512
	516
SWITCH AS-MAGNETIC (PRELUBE)	138
SWITCH AS (PRELUBE TIMER)	134
SWITCH AS-PRESSURE	1261
	1320
SWITCH AS-PRESSURE (HIGH/LOW)	1253
	1256
	1260
	1308
	1312
	1316
	1320
SWITCH AS-PRESSURE (OIL)	134
	136
	138
SWITCH AS-PUSH BUTTON (DOWNSHIFT)	876
SWITCH AS-PUSH BUTTON (UPSHIFT)	876
SWITCH AS (REAR LIGHT)	522
	526
SWITCH AS-ROCKER (A/C ON/OFF)	1280
	1282
SWITCH AS-ROCKER (AUXILIARY)	522
	526
SWITCH AS (ROCKER) (CONSOLE RAISE/LOWER)	844
SWITCH AS-ROCKER (PARKING BRAKE)	858
SWITCH AS-ROCKER (SIDE LIGHT)	523

INDEX

Name	Page
	526
SWITCH AS-ROTARY (FAN SPEED)	1280
	1282
SWITCH AS-ROTARY (WIPER/WASHER)	1456
	1460
SWITCH AS (SINGLE/DUAL TILT CONTROL)	502
SWITCH AS-TEMPERATURE (FILTER BYPASS)	329
	337
	345
	353
	361
	369
SWITCH AS-THERMOSTAT	1202
	1206
	1210
SWITCH AS (TIP CONTROL)	502
SWITCH AS-TOGGLE (LOCKING)	886
SWITCH AS-TOGGLE (LOCKING)(RIPPER PIN PULLER)	888
	890
SWITCH AS (24 VOLT)(ILLUMINATED) (THROTTLE)	522
	526
SWITCH GP	527
SWITCH GP-BYPASS	329
	337
	497
	498
SWITCH GP-BYPASS (POWERTRAIN FILTER)	345
SWITCH GP-BYPASS (POWERTRAIN FILTER PRESSURE)	353
SWITCH GP-DISCONNECT	499
SWITCH GP-DISCONNECT (BATTERY)	329
	338
	345
	353
	361
	369
SWITCH GP-FLOW	7
	9
	11
SWITCH GP-FLOW–COOLANT	500
	501
SWITCH GP-HANDLE	502
	1110
SWITCH GP (HORN)	522
SWITCH GP-MAGNETIC	477
	506
	512
	516
SWITCH GP-MAGNETIC (DISCONNECT SWITCH)	480
SWITCH GP-MAGNETIC (START RELAY)	508
SWITCH GP-ROCKER (OPERATOR)	523
	526
SWITCH GP-ROCKER (START AID)	522
	526
SWITCH GP-START–KEY	503
SWITCH GP-TIMER	504
SWITCH GP-TIMER (PRELUBE)	136
SWITCH GP-TOGGLE (FAN CONTROL)	1274
SWITCH GP-TOGGLE (LOCKING)(RIPPER PIN PULLER)	888
	890
SWITCH-HEATER CONTROL	398
	402

T

Name	Page
TANK & FILTER GP-HYDRAULIC	998
TANK GP-COOLANT	183
TANK GP-FUEL	308
	310
	312
	313
TANK GP-WATER	184
	186
	188
	190
TANK GP-WINDOW WASHER	1420
	1421
	1422
	1424
	1426
TIMER	136
	138
	504
TIMER AS-ON DELAY (24 VOLT)	1261
	1320
TOOTH GP-RIPPER	1191
	1192
	1193
TORQUE CONVERTER GP	642
	644
	646
TRACK ADJUSTER & RECOIL GP	822
	828
	830
	832
	834
TRACK ADJUSTER & RECOIL GP–LH	826
TRACK ADJUSTER & RECOIL GP–RH	824
TRACK ADJUSTER & RECOIL GP (RH)	838
TRACK GP	836
	837
	838
TRACK GP–2 REQUIRED	836
	837

INDEX

Name	Page
TRANSMISSION AR	648
TRUNNION AR-BULLDOZER	1138 1140
TRUNNION GP-BULLDOZER	1142 1143
TRUNNION GP-ENGINE	108
TURBOCHARGER GP	212 213 214 215

U

UNDERCARRIAGE AR	839 841 842 843
UNDERCARRIAGE AR–LH	839 840 841
UNDERCARRIAGE AR–RH	838 840
UNIVERSAL JOINT GP	649

V

V-BELT	109 152 154 318 324 326 1242 1244 1248
V-BELT SET	109
V-BELT SET (INCLUDES 4 BELTS)	57 58 59 62 63 64 65 66 70 74 75 76 109
VALVE	1032 1036
VALVE & CYLINDER GP	1000
VALVE & CYLINDER GP–LH	1002 1004 1015
VALVE & CYLINDER GP–(LH)	1010 1012
VALVE & CYLINDER GP–RH	1006 1008 1014
VALVE & CYLINDER GP (LH)	1065 1066
VALVE & CYLINDER GP (RH)	1065 1066
VALVE & MTG GP-CONTROL	1016 1017
VALVE & MTG GP-FAN DRIVE	142
VALVE & MTG GP-PILOT	650 651
VALVE & MTG GP-STEERING	877
VALVE AS	144 184 186 220 222 224 226 1211 1324
VALVE AS (AIR VENT)	998
VALVE AS-CHECK	1146
VALVE AS-CHECK (WIPER/WASHER SYSTEM)	1421 1422 1426
VALVE AS-CONTROL	666 668 1022
VALVE AS-DRAIN	180
VALVE AS (ETHER START)(24 VOLT)	474
VALVE AS-GREASE (FILL)	822 830 832
VALVE AS (WATER)	1294
VALVE AS-WATER	1202 1206 1286 1290
VALVE AS (WATER TANK DRAIN)	188 190
VALVE-BALL (MANUAL SHUTOFF)	248 250 262
VALVE-BYPASS	998
VALVE-CHECK	248 250 673
VALVE-DRAIN	678 680 682

INDEX

Name	Page
	943
	948
	959
VALVE-EXHAUST	46
VALVE GP	1020
	1038
	1040
	1041
VALVE GP-BANK	1018
VALVE GP-BANK 3	1020
VALVE GP-BYPASS	1022
VALVE GP-CHECK	1023
VALVE GP-CONTROL	652
	654
	656
	658
	878
	1024
	1026
	1031
	1032
	1034
	1036
VALVE GP-DIVERTER (COLD WEATHER CLIMATE ONLY)	1036
VALVE GP-FLUID SAMPLING	550
	603
	609
	614
	618
	622
	998
VALVE GP-MODULATING	660
VALVE GP-PILOT	1038
	1039
VALVE GP-PILOT (TILT & TIP)	1039
VALVE GP-PRESSURE CONTROL	264
	662
	1040
	1144
VALVE GP-PRESSURE CONTROL–FUEL	314
VALVE GP-PRIORITY	664
VALVE GP-QUICK-DROP	1041
	1042
VALVE GP-RELIEF	614
	618
	622
	666
	668
	1043
VALVE GP-SELECTOR	654
	656
	658
	670
	1018
	1146
VALVE GP-SELECTOR & PRESS CONT	1044
VALVE GP-SHUTTLE	1046
VALVE GP-SOLENOID	294
	671
	672
	880
	881
	1047
	1048
	1049
	1050
	1051
	1052
	1053
	1054
	1056
	1058
VALVE GP-SOLENOID (PRESSURE CONTROL)	296
	297
	298
VALVE GP-SOLENOID (TILT/TIP FUNCTION)	1059
VALVE GP-TILT CONTROL–DUAL	1058
	1059
VALVE GP-TRANSMISSION CONTROL	673
	674
VALVE GP-WINCH CONTROL	1148
VALVE (LOAD CHECK)	1026
VALVE MECHANISM GP	110
VALVE (RELIEF)	822
	824
	826
	828
	830
	832
	834
VALVE-RELIEF POPPET	1027
VALVE-SHUTOFF	167
VENT AS	216

W

WARNING GP-BACKUP	352
	368
WASHER GP-WINDOW	1428
	1432
WASTE HANDLING AR	4
WEATHERSTRIP	1442
	1443
WINCH AR-TOWING	1194
WINCH GP-TOWING	1194
	1195
WINDOW AS-DOOR-LH (ARCTIC)	1230
	1232

INDEX

Name	Page
WINDOW AS-DOOR-RH (ARCTIC)	1230
	1232
WINDOW AS-FRONT (ARCTIC)	1230
	1232
WINDOW AS-LH (ARCTIC)	1230
	1232
WINDOW AS-SIDE (ARCTIC)	1230
	1232
WINDOW AS-SLIDING–LH	1435
WINDOW AS-SLIDING–RH	1435
WINDOW AS-SLIDING (LH)	1234
WINDOW AS-SLIDING (RH)	1234
WINDOW GP-CAB	1447
	1448
WINDOW GP-CAB–LH	1437
	1440
	1441
	1443
	1444
WINDOW GP-CAB–REAR	1449
	1450
WINDOW GP-CAB–RH	1436
	1438
	1439
	1442
	1446
WINDOW GP-CAB (LH)	1437
WINDOW GP-CAB (LH)(SLIDING)	1435
WINDOW GP-CAB (REAR)(SLIDING)	1234
WINDOW GP-CAB (RH)	1436
	1442
WINDOW GP-CAB (RH)(SLIDING)	1435
WIPER GP-WINDOW	1452
	1454
	1456
	1460
WIPER PIVOT GP	1464
WIRING GP-CONSOLE	506
	508
	512
	516
WIRING GP-ENGINE	520
WIRING GP-PLATFORM	522
	526
WIRING GP-UNIT INJECTOR	530

Y

Name	Page
YOKE GP	111
	112

INDEX

Désignation	Page
A	
ACCOUDOIR (ASS)	1214
ACCOUDOIR (VERSION)	1213
ACCOUPLEMENT DE POMPE (ASS)	547
ACCUMULATEUR DE CLIMATISEUR	1260
	1320
ADAPTATEUR DE REMPLIS. RAPIDE DE CARBURANT (ASS)	216
	218
	220
	222
	224
	226
ADDITIF POUR LIQUIDE DE REFROIDISSEMENT (ASS)	143
	144
ADMISSION REFROIDIE PAR EAU (ASS)	192
ALTERNATEUR DE CHARGE (ASS)	322
	324
	326
ALTERNATEUR DE CHARGE (ASS)	318
	320
ALTERNATEUR DE CHARGE (VERSION)	316
ALTERNATEUR-VENTILATEUR	322
AMORTISSEUR DE VIBRATIONS (ASS)	56
AMPOULE (24 VOLTS)	522
	526
	1352
AMPOULE (24 VOLTS) (PLAFONNIER)	414
AMPOULE (24 VOLTS) (PROJECTEUR)	415
AMPOULE (24 VOLTS) (65 WATTS)	416
AMPOULE (24 VOLTS)(65 WATTS)	417
AMPOULE (28 VOLTS)	1350
ARBRE A CAMES (ASS)	20
ARBRE DE TRANSMISSION (ASS)	531
	532
	533
	534
ARBRE D'ENTRAINEMENT PRINCIPAL	641
AUTOCOLLANT	858
AUTOCOLLANT - ÉQUIPEMENT DE MANUTENTION DE DÉCHET	1465
AUTOCOLLANT - FUSIBLE	513
	517
AUTOCOLLANT - RÉCHAUFFEUR	398
	402
AUTOCOLLANT-CAT	1194
	1195
AUTOCOLLANT DE MISE EN GARDE	768
	770
	772
	774
	776
	778
	780
AUTOCOLLANT D'IDENTIFICATION	1350
AUTOCOLLANT D'IDENTIFICATION (ASSEMBLAGE ET NO DE SÉQUENCE)	1202
	1206
	1210
	1264
	1266
	1286
	1290
	1294
AUTOCOLLANT D'IDENTIFICATION (FUSIBLE)	154
	506
	508
AUTOCOLLANT DU PANNEAU	1280
	1282
	1350
	1352
AUTOCOLLANT (IDENTIFICATION DU COUSSIN DE SIÈGE)	1346
	1347
AUTOCOLLANT (INSTRUCTION) (COMMANDE DE BULLDOZER)	1110
AUTOCOLLANT-NIVEAU SONORE DANS POSTE DE CONDUITE	3
	1402
AUTOCOLLANT-SANS ÉTAPE	398
	402
AUXILIAIRE DE DÉMARRAGE À L'ÉTHER	474
AVERTISSEUR (ASS)	315
AVERTISSEUR DE RECUL (ASS)	352
	368
AXE DE CULBUTEUR (ASS)	105
B	
BALAI D'ESSUIE-GLACE (ENS)	1152
	1456
	1460
BALAI D'ESSUIE-GLACE (ENS)	1456
BALANCIER DE SUSPENSION (ASS)	756
	757
	758
	759
	760
	761
BALANCIER DE SUSPENSION (ASS)	746
	748
	750
	751
	752
	754
BANDE MÉTÉOROLOGIQUE	1442
	1443

INDEX

Désignation	Page
BARRE D'ATTELAGE (ASS)	692
BARRE DÉFLECTRICE (ASS)	742
	762
	763
BARRE DÉFLECTRICE (ASS) (DROITE)	744
BARRE DÉFLECTRICE (ASS) (GAUCHE)	744
BARRE DÉFLECTRICE (VERSION)	742
	744
BASE-TÉMOIN LUMINEUX	1352
BATI DE RIPPER (ASS)	1090
	1092
	1094
	1096
	1098
BATTERIE ET CÂBLAGE	328
	336
	344
	352
	360
	368
BATTERIE (12 VOLTS)	328
	336
	344
	354
	362
	370
	476
	480
BATTERIE (12 VOLTS/SEC)	2
BLINDAGE AR	730
BLINDAGE D'ARBRE DE TRANSMISSION (ASS)	600
BLINDAGE INFÉRIEUR (ASS)	720
	722
BLOC-CYLINDRES - COUVERCLE (ASS)	21
	22
BLOC-CYLINDRES (ASS)	38
	40
BLOC-CYLINDRES (ENS)	34
	36
BLOC DE BRANCHEMENT (ASS)	413
BOÎTE DE VITESSES (VERSION)	648
BOÎTE PLANÉTAIRE (ASS)	630
BOUCHON - BLOC-CYLINDRES	100
	101
BOUCHON - CULASSE (ASS)	102
BOUCHON À ÉVENT	1424
BOUCHON AIMANTÉ	558
	562
	566
	570
	574
	578
	582
	586
	590
	594
BOUCHON DE CONTROLE DE NIVEAU D'HUILE (ENS)	798
	800
BOUCHON DE GOULOTTE DE REMPLISSAGE D'HUILE MOTEUR	796
BOUCHON DE GOULOTTE DE REMPLISSAGE (ENS)	114
	602
	608
	614
	618
	622
BOUCHON DE GOULOTTE DE REMPLISSAGE (HYDRAULIQUE)	998
BOUCHON DE PRISE ÉLECTRIQUE	506
	508
	512
	516
BOUCHON DE RADIATEUR (ENS)	183
	184
	188
BOUCHON DE REMPLISSAGE D'HUILE MOTEUR (ASS)	114
BOUCHON DE REMPLISSAGE DU RÉSERVOIR DE CARBURANT	216
	218
BOUCHON DE RÉSERVOIR DE CARBURANT (ENS)	308
	313
BOUCHON DE VIDANGE	90
	180
	768
	770
	772
	774
	776
	778
	780
	1070
BOUCHON DE VIDANGE D'HUILE	96
BOUCHON FILETÉ	399
	554
	556
	636
	646
	654
	656
	658
	678
	680
	682
BOUCHON-JOINT TORIQUE	74
BOUCHON-JOINT TORIQUE (FILET 7/16-20)	101

INDEX

Désignation	Page
BOULON (1-14X3,75 PO)	598
BOULONNERIE - ROBINET DE BATTERIE (VERSION)	397
BOULONNERIE DE MONTAGE DE LA POMPE A HUILE (ASS)	113
BOUTON	1235
	1460
BOUTON-AVERTISSEUR	522
	527
BOUTON DE COMMANDE	1280
	1282
BOUTON-LOMBAIRE	1347
BOUTON (RÉGLAGE DE L'ACCOUDOIR)	844
BRAS DE POUSSEE - DROITE (ASS)	1132
BRAS DE POUSSEE - GAUCHE (ASS)	1131
BRAS DE POUSSÉE (ASS)	1130
BROSSE (ENS)	494
BROSSE (ENS) (DÉMARREUR)	484

C

Désignation	Page
CABINE - REVÊTEMENT (ASS)	1307
CABINE (ASS)	1234
CABINE (ASS)	1237
CABINE (VERSION)	1221
	1222
	1224
	1225
	1226
	1228
CABINE (VERSION)	1216
	1218
	1220
CABINE (VERSION POUR TEMPS FROID)	1230
	1232
CABLAGE - PLATE-FORME (ASS)	522
	526
CABLAGE DE CONSOLE (ASS)	506
	508
	512
CABLAGE DE CONSOLE (ASS)	516
CABLAGE DE MOTEUR (ASS)	520
CABLAGE D'INJECTEUR	530
CACHE-SOUPAPES (ASS)	26
	27
CADENAS (ASS)	218
	248
	250
	262
	308
	312
	477
	481
	694
	700
	704
	708
	736
	896
CANALISATIONS - INJECTEURS-POMPES HYDRAULIQUES	268
CANALISATIONS (ASSEMBLAGE POUR L'ARCTIQUE)	932
CANALISATIONS D'AIR (ASS)	200
	202
	203
CANALISATIONS D'ALIMENTATION D'HUILE (ASS)	124
	126
CANALISATIONS DE CARBURANT (ASS)	262
CANALISATIONS DE CHAUFFAGE (ASS)	1324
CANALISATIONS DE CLIMATISEUR (ASS)	1308
CANALISATIONS DE CLIMATISEUR (ASS)	1312
	1316
	1320
CANALISATIONS DE POMPE (ASS)	942
	948
	956
CANALISATIONS DE RÉCHAUFFEUR DE LIQUIDE DE REFROIDISSEMENT	1324
CANALISATIONS DE TREUIL (ASS)	986
	988
CANALISATIONS DE VÉRIN DE LEVAGE (ASS)	934
	936
CANALISATIONS D'EAU (ASS)	166
CANALISATIONS D'EAU (ASS)	156
	158
	161
	162
CANALISATIONS D'EXTRACTEUR DE BROCHE (ASS)	937
	938
	939
CANALISATIONS D'EXTRACTEUR DE BROCHE (ASS)	940
CANALISATIONS D'HUILE DE TRANSMISSION (ASS)	602
CANALISATIONS D'HUILE DE TRANSMISSION (ASS)	608
	614
	618
	622
CANALISATIONS D'HUILE DE TURBOCOMPRESSEUR (ASS)	130
CANALISATIONS D'HUILE MOTEUR (ASS)	120
CANALISATIONS D'INCLINAISON (ASS)	971
CANALISATIONS DU FILTRE A CARBURANT (ASS)	264
CANALISATIONS DU RIPPER (ASS)	964

INDEX

Désignation	Page
	968
	970
CANALISATIONS DU VÉRIN D'INCLINAISON (ASS)	972
	974
	976
	978
	982
CANALISATIONS ET POMPE (VERSION)	990
CAPOT ET PROTECTION (ASS)	736
CAPTEUR - SUPPRESSION DE COM. DE RALENTIS. AUTO.	134
CAPTEUR - SUPPRESSION DE COM. DE RALENTIS. AUTO.	444
CAPTEUR DE NIVEAU DE CARBURANT (ASS)	445
CAPTEUR DE PRESSION (ASS)	454
	455
	456
	457
	459
	460
	461
	462
CAPTEUR DE PRESSION (ASS)	202
	453
CAPTEUR DE PRESSION (ASS)	458
CAPTEUR DE PRESSION (ASS) (ADMISSION DE TURBOCOMPRESSEUR)	203
CAPTEUR DE PRESSION (ASS) (ASSISTANCE PNEUMATIQUE)	48
	50
	52
	54
CAPTEUR DE PRESSION (ASS) (ATMOSPHÉRIQUE)	238
	240
CAPTEUR DE PRESSION (ASS) (COMMANDE D'INJECTION)	50
CAPTEUR DE PRESSION (ASS) (HUILE MOTEUR)	284
CAPTEUR DE TEMPÉRATURE	152
	398
CAPTEUR DE TEMPERATURE (ASS)	158
	162
	166
	468
	469
	470
CAPTEUR DE TEMPERATURE (ASS) (CARBURANT)	264
CAPTEUR DE TEMPERATURE (ASS) (HUILE DE TRANSMISSION)	346
	352
	360
	368
CAPTEUR DE TEMPERATURE (ASS) (HUILE HYDRAULIQUE)	346
	354
	362
	370
CAPTEUR DE TEMPÉRATURE (LIQUIDE DE REFROIDISSEMENT)	154
CAPTEUR DE VITESSE (ASS)	92
	93
	345
	443
	463
	464
	465
	466
	467
CAPTEUR DE VITESSE (ASS) (ODOMÈTRE)	329
	336
	353
	361
CAPTEUR DE VITESSE (ASS) (VENTILATEUR)	60
	72
CAPTEUR MAGNÉTIQUE (ASS)	443
CARENAGE - GARDE-BOUE (ASS)	700
	702
	704
CARENAGE DE MOTEUR (ASS)	694
	698
CARTER - TREUIL (ASS)	1070
CARTER AV (ASS)	92
	93
CARTER DE VOLANT (ASS)	90
CARTER TELESCOPIQUE DE MECANISME AMORTISSEUR	768
	770
	772
	774
	776
	778
	780
CARTER TÉLESCOPIQUE DE MÉCANISME AMORTISSEUR (ENS)	767
CEINTURE DE SECURITE (ASS)	1390
CEINTURE DE SECURITE (ASS)	1368
	1369
	1370
	1386
	1387
CEINTURE DE SECURITE (ASS) (RÉTRACTABLE)	1379
	1380
	1381
	1388

INDEX

Désignation	Page
	1389
	1391
	1392
	1393
CENDRIER	1280
	1282
CHAINES (ASS)	836
	837
	838
CHAPEAU	132
CHAPEAU ANTI-POUSSIERE	410
CHAPEAU DE CONNECTEUR	506
	508
CHAPEAU DE GALET INFERIEUR (ASS)	766
CHAPEAU DE ROUE AV (CHAINE) (ASS)	764
	765
CHAPEAU DE SOUPAPE DE CLIMATISEUR (FILET 7/16 X 20)	1264
CHAPEAU (ENS)	248
	250
CHAPEAU (ENS) (FILET 13/16-16)	246
CHAPEAU (PORTE-FUSIBLES)	506
	508
	512
	516
CHÂSSIS ET CARTER (ASS)	678
	680
	682
CHAUFFAGE (ASS)	398
	1280
	1282
CHAUFFAGE DE CABINE (ASS)	1280
	1282
	1290
	1294
CHAUFFAGE DE CABINE (ASS)	1286
CHAUFFAGE (VERSION)	1278
CLAPET	1032
	1036
CLAPET A BILLE (ARRÊT MANUEL)	248
	250
	262
CLAPET ANTI-RETOUR	248
	250
	673
CLAPET (ASS)	1020
	1038
	1040
	1041
CLAPET (CONTRÔLE DE CHARGE)	1026
CLAPET DE DECHARGE (ASS)	614
	618
	622
	666
	668
	1043
CLAPET DE RETENUE (ENS)	1146
CLAPET DE RETENUE (ENS)	1023
CLAPET DE RETENUE (ENS) (SYSTÈME D'ESSUIE GLACE/LAVE-GLACE)	1421
	1422
	1426
CLAPET (DÉTENTE)	822
	824
	826
	828
	830
	832
	834
CLAPET (ENS)	144
	184
	220
	222
	224
	226
	1211
	1324
CLAPET (ENS)	186
CLAPET (ENS) (DÉMARRAGE À L'ÉTHER)(24 VOLTS)	474
CLAPET (ENS) (EAU)	1294
CLAPET (ENS) (PURGEUR D'AIR)	998
CLAPET (ENS) (VIDANGE DE RÉSERVOIR D'EAU)	188
	190
CLÉ	308
	312
CLÉ (COUPE-BATTERIE)	499
CLIMATISEUR (ASS)	1202
	1206
	1210
CLIMATISEUR (VERSION)	1200
	1201
COLLECTEUR D'ÉCHAPPEMENT (ASS)	204
	205
COLLECTEUR ET SOUPAPE (ASS)	874
	875
COLLECTEUR ET SOUPAPE (ASS)	626
	627
COMMANDE DE BOÎTE ET MONTAGE (ASS)	538
COMMANDE DE DECELERATEUR (ASS)	228
COMMANDE DE DECELERATEUR (ASS)	230
	232
COMMANDE DE DIRECTION ET BOITE DE VITESSES	860
	862
	864
	866
COMMANDE DE DOUBLE DEVERS (VERSION)	884

INDEX

Désignation	Page
COMMANDE DE FREIN DE STATIONNEMENT (ASS)	858
COMMANDE DE PULVERISATION (ASS)	1270
COMMANDE DE SURVEILLANCE (ASS)	1350
COMMANDE DE TRANSMISSION (ASS)	391
COMMANDE DE TREUIL (ASS)	1086
COMMANDE DE TREUIL DE REMORQUAGE (ASS)	1082
COMMANDE D'INVERSION DE LA CENTRALE DE SURVEILLANCE (ASS)	1269
COMMANDE ÉLECTRIQUE DE RÉGLAGE DU MOTEUR (ASS)	384
	385
	386
COMMANDE ELECTRONIQUE DE BOITE (ASS)	381
	382
	383
	860
COMMANDE ELECTRONIQUE DE MOTEUR (ASS)	387
	388
	389
	390
COMMANDE ELECTRONIQUE (ENS) (LAMPE DE TABLEAU DE BORD)	1350
	1352
COMMANDE ELECTRONIQUE ET MONTAGE (ASS)	376
	377
	378
COMMANDE ET MONTAGE - MOTEUR	379
	380
COMMANDE HYDRAULIQUE DE BOÎTE (ASS)	540
	542
	544
COMMANDE HYDRAULIQUE (VERSION)	886
	888
	890
	892
COMMANDE NON PROGRAMMEE (ASS)	377
	392
	393
	394
	471
COMPOSANTS ÉLECTRONIQUES DE LA MACHINE (VERSION)	1
COMPRESSEUR DE REFRIGERANT (ASS)	1238
	1239
	1240
	1241
	1242
	1244
	1246
	1248
CONDENSATEUR ET MONTAGE (RÉFRIGÉRANT)	1256
	1260
CONDENSATEUR ET MONTAGE (RÉFRIGÉRANT)	1250
	1252
CONDENSEUR DE RÉFRIGÉRANT	1264
	1266
	1268
CONDUCTEUR - SPÉCIAL (VERSION)	1340
	1342
CONDUCTEUR - SPÉCIAL (VERSION)	1338
CONTACTEUR DE COMMANDE DE RÉCHAUFFEUR	398
	402
CONTACTEUR DE DEBIT (ASS)	7
	9
	11
CONTACTEUR DE DEBIT (ASS)	500
	501
CONTACTEUR (ENS)	504
CONTACTEUR (ENS) (À BASCULE) (RELEVAGE/ABAISSEMENT DE LA CONSOLE (ASS))	844
CONTACTEUR (ENS) (COMMANDE D'INCLINAISON)	502
CONTACTEUR (ENS) (COMMANDE D'INCLINAISON SIMPLE/DOUBLE)	502
CONTACTEUR (ENS) (FEU AR)	522
	526
CONTACTEUR (ENS) (FEUX AVANT)	523
	527
CONTACTEUR (ENS) (MINUTERIE DE PRÉGRAISSAGE)	134
CONTACTEUR (ENS) (24 VOLTS) (ILLUMINÉ) (ACCÉLÉRATEUR)	522
	526
CONTACTEUR MAGNETIQUE (ASS)	506
	512
	516
CONTACTEUR MAGNETIQUE (ASS)	477
CONTACTEUR MAGNETIQUE (ASS) (INTERRUPTEUR DE DÉCONNECTION)	480
CONTACTEUR MAGNETIQUE (ASS) (RELAIS DE DÉMARRAGE)	508
CONTACTEUR MAGNETIQUE (ENS) (PRÉGRAISSAGE)	138
CONTACTEUR MAGNETIQUE (ENS) (RELAIS PRINCIPAL)	506
	508
	512
	516
CONTACTEUR-POIGNÉE (ASS)	502
	1110

INDEX

Désignation	Page
CONTREPOIDS (ASS)	686
	688
	689
CONTREPOIDS ET BARRE - ARRIÈRE (VERSION)	684
CONVERTISSEUR DE COUPLE (ASS)	642
	644
	646
CORDON POUR LITTÉRATURE	397
COURONNE ET ENGRENAGES DE TRANSFERT (ASS)	598
COURROIE TRAPEZOIDALE	109
	152
	154
	318
	324
	326
	1242
	1244
	1248
COUVERCLE DE CARTER AV (ASS)	24
COUVERCLE DE CARTER DE VOLANT (ASS)	23
COUVERCLE DE RÉSERVOIR HYDRAULIQUE	896
COUVERCLE DE TOURILLON (ASS)	690
COUVERCLE INFÉRIEUR-DOSSIER (ASS)	1347
COUVERCLE INFÉRIEUR-DOSSIER (ASS)	1344
	1345
	1346
COUVERCLE INFÉRIEUR-DOSSIER (ASS) (ARRIÈRE)	1372
COUVERCLES D'EXPEDITION (ASS)	1088
CREPINE (ENS)	998
CROISILLON ET ROULEMENT	649
CULASSE (ASS)	45
	46
	48
	50
	52
	54
CULASSE (ENS)	41
	42
	43
	44
CULBUTERIE (ASS)	110

D

Désignation	Page
DÉFLECTEUR DE PLUIE (ENS)	197
DEFLECTEUR PARE-SABLE (ASS)	713
DÉMARRAGE PAR TEMPS FROID (VERSION)	476
DÉMARRAGE PAR TEMPS FROID (VERSION)	480
DÉMARREUR ÉLECTRIQUE (ASS)	488
DÉMARREUR ÉLECTRIQUE (ASS)	491
	492
	494
DÉMARREUR ÉLECTRIQUE (ASS)	484
DENT DE RIPPER (ASS)	1191
	1192
	1193
DISJONCTEUR DE SECURITE (ENS) (FREIN)	852
	854
	856
DISJONCTEUR DE SECURITE (ENS) (INVERSION)	860
	862
	864
DISJONCTEUR (ENS) (10A)	506
	512
	516
DISJONCTEUR (ENS) (10A) (AUXILIAIRE)	509
DISJONCTEUR (ENS) (10A) (CLÉ)	508
DISJONCTEUR (ENS) (10A) (DÉMARRAGE DU MOTEUR)	509
	512
	516
DISJONCTEUR (ENS) (105A)	506
DISJONCTEUR (ENS) (105A) (ALTERNATEUR)	508
	512
	516
DISJONCTEUR (ENS) (105A) (PRINCIPAL)	508
	512
	516
DISJONCTEUR (ENS) (15A)	152
	506
	512
	516
	1252
	1257
	1260
DISJONCTEUR (ENS) (15A) (ALIMENTATION)	509
	512
	516
DISJONCTEUR (ENS) (15A) (MOTEUR)	508
	512
	516
DISJONCTEUR (ENS) (15A) (MOTEUR DE VENTILATEUR)	512
	516
DISJONCTEUR (ENS) (15A) (PHARE AV)	508
DISJONCTEUR (ENS) (15A) (PHARES)	512
	516
DISJONCTEUR (ENS) (15A) (SOUFFLANT)	509
DISPOSITIF D'ARRÊT	868

INDEX

Désignation	Page
DISPOSITIF DE VIDANGE RAPIDE D'HUILE (ASS)	132
DISPOSITIF D'EVACUATION DES VAPEURS DE CARTER	116
DISTRIBUTEUR (ASS)	652
	654
	656
	658
	878
	1024
	1026
	1031
	1032
	1034
	1036
DISTRIBUTEUR DE BOITE (ASS)	673
	674
DISTRIBUTEUR DE FREIN (ENS)	666
	668
	1022
DISTRIBUTEUR DE PRESSION (ASS)	314
DISTRIBUTEUR DE PRESSION (ASS)	264
	662
	1040
	1144
DISTRIBUTEUR DE TREUIL (ASS)	1148
DISTRIBUTEUR D'INCLINAISON (ASS)	1058
	1059
DISTRIBUTEUR ET MONTAGE (ASS)	1016
	1017
DISTRIBUTEUR ET VÉRIN (ASS)	1002
	1004
	1006
	1008
	1010
	1012
	1014
	1015
DISTRIBUTEUR ET VÉRIN (ASS)	1000
DISTRIBUTEUR ET VÉRIN (ASS) (DROITE)	1065
	1066
DISTRIBUTEUR ET VÉRIN (ASS) (GAUCHE)	1065
	1066
DISTRIBUTEUR TRIPLE ÉLÉMENT (ASS)	1020
DISTRIBUTEURS (ASS)	1018
DOUILLE-ALIMENTATION (ENS) (SORTIE 24 VOLTS)	522
	526

E

Désignation	Page
EAU DES CHEMISES - RECHAUFFEUR (ASS)	402
	411
	412
EAU DES CHEMISES - RECHAUFFEUR (ASS)	410
ÉCLAIRAGE - AUXILIAIRE (ASS)	427
	428
ÉCLAIRAGE - PROJECTEURS (ASS)	429
	430
	431
	432
ECLAIRAGE AR (ASS)	439
	440
ÉCLAIRAGE (ASS)	426
ECLAIRAGE AV (ASS)	434
	435
	436
	437
	438
ECLAIRAGE DE RIPPER (ASS)	442
ÉCLAIRAGE (VERSION)	420
	422
ÉCRAN D'AFFICHAGE	152
	154
ÉCRAN DE COLLECTEUR (ASS)	210
ÉCRAN (ENS)	998
ÉCRAN MAGNÉTIQUE	1136
ÉCRAN MAGNÉTIQUE (ASS)	1136
ÉJECTEUR AUTOMATIQUE DE POUSSIÈRE (ASS)	197
ÉLECTRONIQUE DE TRANSMISSION (ASS)	396
ÉLECTRONIQUE DE TRANSMISSION (ASS)	396
ELEMENT D'ADDITIF POUR LIQUIDE DE REFROIDISSEMENT	143
ÉLÉMENT DE FILTRE	202
	203
	246
	252
	292
	1086
ÉLÉMENT DE FILTRE À HUILE (ENS)	552
	554
	556
	614
	618
	622
ÉLÉMENT DE FILTRE À HUILE (ENS) (DÉBIT HYDRAULIQUE/RETOUR DE DÉBIT) (JETABLE)	998
ÉLÉMENT DE FILTRE (LIQUIDE RÉSISTANT AU FEU)	998
ÉLÉMENT DU RÉCHAUFFEUR D'EAU DES CHEMISES (ENS)	411
	412
ÉLÉMENT DU RÉCHAUFFEUR D'EAU DES CHEMISES (ENS) (120 VOLTS/1500 WATTS)	410
ÉLÉMENT PRINCIPAL (ENS)	196

INDEX

Désignation	Page
ÉLÉMENT SECONDAIRE (ENS)	196
ÉLIMINATION DES DÉCHETS (VERSION)	4
EMBOUT D'EXTRÉMITÉ (ASS)	1149
EMBOUT ET LAME DE COUPE (ASS)	1175
	1176
	1177
	1178
	1179
	1180
	1181
	1182
EMBRAYAGE ET ENGRENAGE (ASS)	1074
EMBRAYAGE ET FREIN DE DIRECTION (ASS)	850
EMBRAYAGE ET FREIN DE DIRECTION (ASS)	848
ENGRENAGE DE DIRECTION (ASS)	870
	872
ENGRENAGE D'ÉQUIPEMENT (ASS)	1100
ENTRAÎNEMENT DE TREUIL (ASS)	1174
ENTRAÎNEMENT DE VENTILATEUR (ASS)	57
	58
	59
	60
	63
	64
	65
	66
	67
	68
	70
	72
	75
	76
ENTRAÎNEMENT DE VENTILATEUR (ASS)	61
	62
	73
	74
ENTRAÎNEMENT DE VENTILATEUR (ASS) (ARTIQUE)	1
ENTRAINEMENT D'INJECTEURS-POMPES HYDRAULIQUES	234
	236
	237
	238
	239
	240
	242
	244
ENTRETIEN DE LA TRANSMISSION (ASS)	471
ESSUIE-GLACE (ASS)	1452
	1454
	1456
	1460
ETRIER (ASS)	111
	112
ÉVENT (ENS)	216
EXTRACTEUR DE BROCHE (ASS)	1126
	1128
EXTRACTEUR DE BROCHE (VERSION)	1125

F

Désignation	Page
FAISCEAU DE CABLES (ENS) (CAPTEUR DE PRESSION)	457
FAISCEAU DE CABLES (ENS) (DOUILLE) (CAPTEUR DE PRESSION)	457
FAISCEAU DU REFROIDISSEUR D'HUILE (ASS)	146
	163
	167
FAISCEAU DU REFROIDISSEUR D'HUILE (ENS) (MOTEUR)	145
	163
	167
FILTRE - SÉPARATEUR D'EAU ET DE CARBURANT (ENS)	292
FILTRE - SÉPARATEUR D'EAU ET DE CARBURANT (ENS)	246
FILTRE - SÉPARATEUR D'EAU ET DE CARBURANT (ENS) (PRINCIPAL)	252
FILTRE A AIR (ASS)	194
	195
	196
FILTRE À AIR (CABINE)	1280
	1282
FILTRE À CARBURANT	308
FILTRE A CARBURANT (ASS)	248
	250
FILTRE A CARBURANT (ENS)	264
FILTRE A HUILE (ASS)	550
	552
	554
	556
FILTRE A HUILE MOTEUR (ENS)	550
FILTRE A MOUSSE	330
	337
	345
	354
	362
	370
FILTRE DE DÉRIVATION (ASS)	1069
FILTRE DE SÉPARATEUR D'EAU ET DE CARBURANT (ASS)	253
FILTRE DE SÉPARATEUR D'EAU ET DE CARBURANT (ASS)	254
FILTRE DE SÉPARATEUR D'EAU ET DE CARBURANT (ASS)	252
FILTRE DE TYPE À CARTOUCHE	310
FILTRE (ENS)	310

INDEX

Désignation	Page
FILTRE (ENS) (SÉPARATEUR D'EAU ET CARBURANT)	253
FILTRE ET CANALISATIONS DE CARBURANT (ASS)	246
FILTRE (INJECTEUR DE POMPE HYDRAULIQUE)	234
	242
	244
FILTRE (POMPE À EAU)	172
	174
	176
FLEXIBLE (ENS) (ARCTIQUE)	939
FREIN - COMMANDE (ASS)	852
	854
	856
FUSIBLE	398
FUSIBLE (10A)	506
	508
	513
	517
FUSIBLE (1/4A)	152
	154
FUSIBLE (15A)	152
	154
	506
	508
	513
	517
FUSIBLE (20 A)	506
	508
	512
	516

G

Désignation	Page
GALET A BOUDIN DOUBLE (ASS)	805
	806
	807
	808
	809
GALET A BOUDIN SIMPLE (ASS)	810
	811
	812
	813
	814
GALET SUPERIEUR (VERSION)	802
	803
	804
GARDE-BOUE (ASS)	708
GARDE-BOUE (VERSION)	706
GLACE - AVANT (ENS) (POUR L'ARCTIQUE)	1230
	1232
GLACE - PORTE DROITE (ENS) (POUR L'ARCTIQUE)	1230
	1232
GLACE - PORTE GAUCHE (ENS) (POUR L'ARCTIQUE)	1230
	1232
GLACE GAUCHE (ENS) (POUR L'ARCTIQUE)	1230
	1232
GLACE LATÉRALE (ENS) (POUR L'ARCTIQUE)	1230
	1232
GLISSIÈRE	1438
	1449
GRAISSAGE DE BALANCIER DE SUSPENSION (ASS)	796
GRAISSAGE DE LA TRAVERSE-PIVOT	798
	800
GRAISSEUR	18
	70
	76
	746
	748
	752
	757
	786
	824
	826
	828
	834
	902
	904
	906
	908
	910
	912
	914
	916
	918
	920
	930
	1089
	1090
	1092
	1094
	1096
	1098
	1103
	1104
	1114
GRAISSEUR (FILET 1/8-27)	582
	754
	759
	760
	761
	922
	1064
GRILLE DE PROTECTION (ASS)	1366

INDEX

Désignation	Page
GROUPE DE CONTROLE (SYSTÈME DE SURVEILLANCE CATERPILLAR)	1352
GROUPE DE MONTAGE	1336
GUIDE-CABLE DE TREUIL (ASS)	1089
GUIDE DE GALET (ASS)	1101

H

HUILE MOTEUR - CARTER (ASS)	96

I

INJECTEUR DE CARBURANT (ASS)	286
INJECTEUR DE CARBURANT (ASS)	255 256 257 258 259
INJECTEURS-POMPES HYDRAULIQUES (ENS)	294 300 302 304
INJECTEURS-POMPES HYDRAULIQUES (ENS)	294 296 297 298 302 306
INSONORISATION (VERSION)	3 1402
INSTRUMENT ET BOUCHON (ENS)	310
INTERRUPTEUR - BOUTON-POUSSOIR (ENS) (CHANG. DE VITESSE)	876
INTERRUPTEUR - BOUTON-POUSSOIR (ENS) (PASSAGE DE VITESSE)	876
INTERRUPTEUR - DÉRIVATION (ASS)	329 337
INTERRUPTEUR - DÉRIVATION (ASS)	497 498
INTERRUPTEUR - DÉRIVATION (ASS) (FILTRE - TRANSMISSION)	345
INTERRUPTEUR - DÉRIVATION (ASS) (PRESSION DE FILTRE DE TRAIN DE ROULEMENT)	353
INTERRUPTEUR - MINUTERIE (ASS)	504
INTERRUPTEUR - MINUTERIE (ASS) (PRÉGRAISSAGE)	136
INTERRUPTEUR À BASCULE (ASS) (AUXILIAIRE DE DÉMARRAGE)	522 526
INTERRUPTEUR À BASCULE (ASS) (COMMANDE DU VENTILATEUR)	1274
INTERRUPTEUR À BASCULE (ASS) (CONDUCTEUR)	523 526
INTERRUPTEUR À BASCULE (ASS) (VERROUILLAGE)(EXTRACTEUR DE BROCHE DE RIPPER)	888 890
INTERRUPTEUR À BASCULE (ENS) (VERROUILLAGE)	886
INTERRUPTEUR À BASCULE (ENS) (VERROUILLAGE)(EXTRACTEUR DE BROCHE DE RIPPER)	888 890
INTERRUPTEUR (ASS)	527
INTERRUPTEUR (ASS) (KLAXON)	522
INTERRUPTEUR BALANCIER (ENS) (AUXILIAIRE)	522 526
INTERRUPTEUR BALANCIER (ENS) (CLIMATISEUR)	1280 1282
INTERRUPTEUR BALANCIER (ENS) (FEU LATÉRAL)	523 526
INTERRUPTEUR BALANCIER (ENS) (FREIN DE STATIONNEMENT)	858
INTERRUPTEUR DE DÉMARRAGE (ASS)	503
INTERRUPTEUR DE THERMOSTAT (ENS)	1202
INTERRUPTEUR DE THERMOSTAT (ENS)	1206 1210
INTERRUPTEUR ROTATIF (ENS) (ESSUIE-GLACE/LAVE-GLACE)	1456 1460
INTERRUPTEUR ROTATIF (ENS) (VITESSE DU VENTILATEUR)	1280 1282

J

JAUGE D'HUILE MOTEUR (BAIONNETTE) (ASS)	118
JEU DE COURROIES TRAPEZOIDALES	109
JEU DE COURROIES TRAPEZOIDALES (COMPREND 4 COURROIES)	57 58 59 62 63 64 65 66 70 74 75 76

INDEX

Désignation	Page
	109
JOINT (ASS)	172
	174
JOINT DE VILEBREQUIN (ASS)	28
	30
	32
JOINT PLAT (POMPE D'AMORÇAGE DE CARBURANT)	246
	291
	292
JOINT TORIQUE	554
	556
	558
	562
	566
	570
	574
	578
	582
	586
	590
	594
	942
	943
	949
	956
	958
	1026
JOINT TORIQUE (DIA INT 110,49MM)	308
JOINT UNIVERSEL (ASS)	649

K

Désignation	Page
KIT - COUSSIN (DOSSIER DE VINYLE)	1273
KIT - COUSSIN (RALLONGE DE DOSSIER)	1272
KIT D'ATTACHE	1410
	1414
KIT D'ATTACHE DE CEINTURE DE SECURITE	1408
	1418
KIT DE BALAI D'ESSUIE-GLACE	1457
	1461
KIT DE BALAIS	1203
	1206
	1287
	1291
KIT DE BALAIS DE MOTEUR	1264
KIT DE BEC	1444
	1446
KIT DE BLOC COULISSANT	1388
	1389
	1390
	1391
	1392
	1393
	1397
	1398
	1399
	1400
	1401
KIT DE BORNE	489
	495
KIT DE BORNE D'ALTERNATEUR	320
	322
KIT DE BORNE DE RELAIS	322
KIT DE BORNE DE RELAIS (ALTERNATEUR)	320
KIT DE BORNE (DÉMARREUR)	485
KIT DE BOUCHON (INJECTEUR DE POMPE HYDRAULIQUE)	300
	302
	306
KIT DE BOUGIE (12 BROCHES)	1257
KIT DE BOUGIE (2 BROCHES)	134
	136
	138
	352
	360
	368
	444
	672
	844
	1203
	1256
	1287
	1291
KIT DE BOUGIE (3 BROCHES)	48
	50
	52
	453
	454
	455
	456
	459
	460
	464
	1257
KIT DE BOUGIE (3 BROCHES) (CAPTEUR DE PRESSION)	457
	458
	461
	462
KIT DE BOUGIE (3 BROCHES) (CAPTEUR DE VITESSE-CALAGE DU MOTEUR)	465
KIT DE BOUGIE (4 BROCHES)	352
	360
	368
	506
	508
	512
	516

INDEX

Désignation	Page
	1428
	1432
KIT DE BOUGIE (6 BROCHES)	1202
	1206
	1286
	1290
	1428
	1432
KIT DE BOUGIE (8 BROCHES)	522
KIT DE BOULONNERIE	1054
	1203
	1287
	1291
	1410
	1414
KIT DE BOULONNERIE, JOINTS ET CALES D'ÉPAISSEUR	1102
	1104
KIT DE BOUTON	1298
	1302
KIT DE BOUTON DE SIEGE	1372
KIT DE BOUTON DE SIEGE (SIEGE A SUSPENSION)	1374
KIT DE CARTER	1410
KIT DE CARTOUCHE (ARRIÈRE)	994
	996
KIT DE CHAPEAU DE FILTRE (RÉSERVOIR DE CARBURANT)	308
	313
KIT DE COMPENSATEUR (INJECTEUR DE POMPE HYDRAULIQUE)	300
	302
	306
KIT DE COMPRESSEUR	1410
KIT DE COUSSIN DE SIEGE (SIEGE A SUSPENSION)	1374
KIT DE COUSSIN DE SIEGE (VINYLE)	1372
KIT DE COUSSINET	1299
	1303
KIT DE COUSSINET (DÉMARREUR)	494
KIT DE COUSSINET (ÉTRIER)	302
KIT DE COUSSINET (ÉTRIER)(POMPE HYDRAULIQUE D'INJECTEUR)	300
	306
KIT DE FAISCEAU DE CABLAGE (SIÈGE À SUSPENSION PNEUMATIQUE)	1410
	1414
KIT DE FILTRE DE SÉPARATEUR D'EAU ET DE CARBURANT	246
	252
	292
KIT DE GAINE	1408
	1418
KIT DE GUIDE	1444
	1446
KIT DE JOINT DE VERIN HYDRAULIQUE	900
	902
	926
	928
KIT DE JOINTS	60
	72
	260
	294
	296
	297
	660
	671
	880
	1043
	1047
	1048
KIT DE JOINTS (ÉLECTROVANNE)	1050
	1053
	1056
KIT DE JOINTS (ÉLECTROVANNE D'ENTRAÎNEMENT DE VENTILATEUR)	1052
KIT DE JOINTS (INJECTEUR DE POMPE HYDRAULIQUE)	300
	302
	306
KIT DE JOINTS (INJECTEUR HYDRAULIQUE)	298
KIT DE LA POMPE D'INJECTION DE CARBURANT (RÉNOVÉ)(POMPE HYDRAULIQUE D'INJECTEUR)	300
	302
KIT DE MISE AU POINT DE LA POMPE À EAU	172
	174
KIT DE MONTAGE	198
KIT DE PALE DE VENTILATEUR	152
KIT DE PALETTE	882
	883
	994
	996
KIT DE PANNEAU DU DOSSIER DU SIEGE	1372
KIT DE PANNEAU DU DOSSIER DU SIEGE (SIEGE A SUSPENSION)	1374
KIT DE PARE-CHOCS	1298
	1302
KIT DE POMPE (RÉNOVÉ)(POMPE HYDRAULIQUE D'INJECTEUR)	306
KIT DE POUSSOIR	1298
	1299
	1303
KIT DE PRISE FEMELLE (12 BROCHES)	858
	1257
KIT DE PRISE FEMELLE (2 BROCHES)	74
	134
	136

INDEX

Désignation	Page
	138
	152
	154
	315
	328
	329
	336
	344
	345
	352
	353
	360
	361
	368
	369
	416
	417
	443
	444
	466
	467
	474
	480
	498
	522
	526
	658
	844
	1051
	1052
	1053
	1056
	1202
	1203
	1206
	1211
	1256
	1260
	1264
	1266
	1286
	1287
	1290
	1291
	1294
	1308
	1312
	1316
	1320
	1410
	1414
KIT DE PRISE FEMELLE (3 BROCHES)	74
	152
	154
	158
	162
	166
	264
	414
	446
	447
	448
	449
	450
	451
	452
	463
	468
	469
	470
	888
	890
	1110
	1257
	1280
	1282
	1428
	1432
KIT DE PRISE FEMELLE (4 BROCHES)	445
	880
	1047
	1048
	1049
	1054
	1320
	1428
	1432
KIT DE PRISE FEMELLE (6 BROCHES)	504
	876
	1202
	1206
	1211
	1269
	1280
	1282
	1286
	1290
	1294
	1330
	1331
	1332
	1452
	1454
	1456
	1460
KIT DE REDRESSEMENT (CUVETTE DE SIÈGE)	1348
KIT DE REGLAGE (CUVETTE DE SIÈGE)	1348
KIT DE REGLAGE DE SIEGE - INCLINAISON (CUVETTE DE SIÈGE)	1348

INDEX

Désignation	Page
KIT DE RENIFLARD	218
KIT DE RÉNOVATION	1306
KIT DE RÉNOVATION DE LA POMPE À EAU (EAU)	176
KIT DE RESSORT	1442
	1443
KIT DE RESSORT PNEUMATIQUE	1410
KIT DE RESSORTS	1298
	1302
KIT DE REVISION GENERALE	60
	72
KIT DE ROULEAU	1408
	1410
	1414
	1418
KIT DE VIS DE RETENUE	392
	393
	394
KIT D'ENGRENAGE DE DÉMARREUR	495
KIT D'INDICATEUR	1299
	1302
KIT-FENETRE	1306
KLAXON (ENS) (24 VOLTS)(TON FAIBLE)	328
	336
	344
	352
	360
	368
KLAXON (ENS) (24 VOLTS)(TON FORT)	328
	336
	344
	352
	360
	368

L

Désignation	Page
LAME DE COUPE (ASS)	1149
	1150
	1151
LAME SEMI-UNIVERSELLE (ASS)	1159
	1160
	1162
	1164
LAME SEMI-UNIVERSELLE (ENS)	1154
LAME UNIVERSELLE (ASS)	1166
	1168
	1170
	1172
LAME UNIVERSELLE (ENS)	1156
	1157
	1158
LAMPE - FEUX AV (24 VOLTS) (PROJECTEUR)	418
	419
LAMPE - PHARE (ASS)	419
LAMPE - PHARE (ASS)	415
	417
	418
LAMPE - PHARE (ASS)	416
LAMPE - PHARE (ASS) (24 VOLTS)(SUSPENDU)	426
	427
	428
	429
LAMPE - PHARE (ASS) (24 VOLTS)(VERTICAL)	431
	432
LAVE-GLACE - VITRE (ASS)	1432
LAVE-GLACE - VITRE (ASS)	1428
LENTILLE DE PROJECTEUR (ENS)	417
LENTILLE (ENS) (PLAFONNIER)	415
	416
LENTILLE (ENS) (PROJECTEUR)	418
	419
LENTILLE (PLAFONNIER)	414
LENTILLE ROUGE	1350
	1352
LÈVRE	158
	162
	166
LOGICIEL - TRANSMISSION (ASS)	396
LOGICIEL - TRANSMISSION (ASS)	396
LOGICIEL - TRANSMISSION (ENS)	471
LOGICIEL - TRANSMISSION (ENS) (LOGICIEL SEULEMENT)	396
LUBRIFIANT POUR PALIERS	73

M

Désignation	Page
MACHINE - TEMPS FROID (VERSION)	2
MAILLON DE CHAINE (ENS)	792
	793
	794
MANCHON DE JONCTION DE CABLES	397
MANOCONTACT (ENS)	1261
	1320
MANOCONTACT (ENS) (HAUTE/BASSE)	1253
	1256
	1260
	1308
	1312
	1316
	1320
MANOCONTACT (ENS) (HUILE)	134
	136
	138
MECANISME AMORTISSEUR ET REGLAGE DE CHAINES (ASS)	822

INDEX

Désignation	Page
MECANISME AMORTISSEUR ET REGLAGE DE CHAINES (ASS)	824
	826
	828
	830
	832
	834
MECANISME AMORTISSEUR ET REGLAGE DE CHAINES (ASS) (DROITE)	838
MINUTERIE	136
	138
	504
MINUTERIE (ENS) À TEMPORISATION (24 VOLTS)	1261
	1320
MODULE - CONDUCTEUR (ENS)	1328
	1329
MODULE - QUATRE INSTRUMENTS (ASS)	1330
MODULE - QUATRE INSTRUMENTS (ASS)	1331
MODULE D'INDICATEUR DE VITESSE ET COMPTE-TOURS (ASS)	1332
MONTAGE DE CABINE (ASS)	1334
MONTAGE DE POMPE (ASS)	1115
MONTAGE DE RADIO (ASS)	1305
MONTAGE DE RIPPER (ASS)	1116
	1118
	1120
	1122
MONTAGE DE TREUIL (ASS)	1124
MONTAGE DE TREUIL (VERSION)	1102
MONTAGE DE VÉRIN (ASS)	1114
MONTAGE DU TOIT ROPS (ASS)	1337
MOTEUR ELECTRIQUE (ASS)	1266
MOTEUR ELECTRIQUE (ASS) (27 VOLTS)	1211
	1294
MOTEUR (VERSION)	6
	8
	10

O

Désignation	Page
OEILLETONS DE LEVAGE MOTEUR (ASS)	94

P

Désignation	Page
PARE-PIERRES (ASS)	732
	733
PARE-POUSSIERE	101
	126
	216
	218
	220
	222
	224
	226
	536
	550
	602
	603
	608
	609
	614
	618
	622
	651
	666
	668
	673
	877
	943
	948
	956
	998
	1040
PIGNON AR (ASS)	82
	86
PIGNONNERIE AV (ASS)	80
PISTON ET BIELLE (ASS)	98
	99
PIVOT D'ESSUIE-GLACE (ASS)	1464
PLAFONNIER (ASS)	414
PLAFONNIER (ASS) (24 VOLTS)(AVEC INTERRUPTEUR)	1234
PLAQUE - AVERTISSEMENT (HUILE DE RESSORT AMORTISSEUR)	768
	770
	772
	774
	776
	778
	780
PLAQUE - AVERTISSEMENT (RÉCHAUFFEUR DE LIQUIDE DE REFROIDISSEMENT DE MOTEUR)	398
	402
PLAQUE - AVERTISSEMENT (RESSORT AMORTISSEUR)	744
	768
	770
	772
	774
	776
	778
	780
	848
PLAQUE - REMARQUE (CHAUFFAGES)	398
	402
PLAQUE D'INSTRUCTIONS (CLIMATISEUR)	1200
	1201
PLAQUE D'USURE (ASS)	1183

INDEX

Désignation	Page
	1184
PLAQUE-INFORMATION TECHNIQUE	1468
PLAQUE SIGNALÉTIQUE (ASS)	1465
	1466
PLAQUE SIGNALÉTIQUE DE CONTROLEUR	1350
	1352
PLAQUE SIGNALÉTIQUE (REMARQUE)	1336
PLAQUE SIGNALÉTIQUE (REMARQUE)	1278
PLAQUE SIGNALÉTIQUE (REMARQUE)	2
PLAQUE SIGNALÉTIQUE (REMARQUE) (POMPE DE PRÉGRAISSAGE)	134
	136
	138
PLAQUE SIGNALÉTIQUE (REMARQUE) (RADIO)	1305
PLAQUE SIGNALÉTIQUE (REMARQUE) (SOUPAPE-ÉVENT)	2
PLAQUES SIGNALETIQUES ET AUTOCOLLANTS (ASS)	1468
PLATE-FORME - CABINE (ASS)	1354
	1358
POMPE À AILETTES - CARTOUCHE	882
	883
POMPE A EAU (ASS)	169
	170
	171
	172
	174
	176
POMPE A ENGRENAGES (ASS)	634
	636
	637
	638
POMPE A ENGRENAGES (ASS)	991
	992
POMPE A HUILE MOTEUR (ASS)	140
POMPE À PALETTES (ASS)	996
POMPE À PALETTES (ASS)	994
POMPE D'ALIMENTATION EN CARBURANT (ASS)	294
	296
	297
	298
	300
	302
	304
POMPE D'AMORÇAGE DE CARBURANT (ASS)	291
POMPE D'AMORÇAGE DE CARBURANT ET FILTRE PRINCIPAL	292
POMPE D'INJECTEURS-POMPES HYDRAU. ET MONTAGE	270
	272
	274
	276
	278
	280
	282
	284
POMPE D'INJECTION DE CARBURANT (ASS)	286
	287
	288
	289
	290
POMPE-LIQUIDE DE REFROIDISSEMENT	398
PORTE-BALAIS (ENS)	495
PORTE-BALAIS (ENS) (BROSSE DE DÉMARREUR)	484
PORTE-FUSIBLES (ENS)	506
	508
	512
	516
POULIE D'ALTERNATEUR	324
	326
POUPÉE DU CLAPET DE DÉCHARGE	1027
PREFILTRE (ASS)	207
	208
	209
PREFILTRE (VERSION)	207
	208
PROTECTEUR DE RÉDUCTEURS (VERSION)	714
PROTECTION À CHARNIÈRES (VERSION)	716
PROTECTION ANTIVANDALISME (ASS)	1277
PROTECTION D'ARBRE PIVOT (ASS)	724
PROTECTION DE JOINT (ASS)	734
	735
PROTECTION DE ROUE LIBRE (VERSION)	718
PROTÈGE-RADIATEUR (ASS)	726
	728

R

Désignation	Page
RACCORD DE CLIMATISEUR (ENS)	1260
	1320
RADIATEUR (ASS)	178
	180
RALLONGE DU DOSSIER DE SIEGE	1272
	1273
	1386
	1387
RÉCEPTEUR-DÉSHYDRATEUR (ASS) (CLIMATISEUR)	1320
RÉCEPTEUR-DÉSHYDRATEUR (ASS) (RÉFRIGÉRANT)	1253
	1256
	1260
	1308
	1312

INDEX

Désignation	Page
	1316
RECHAUFFEUR DE CARBURANT (ASS)	406
	408
RÉCHAUFFEUR DU LIQUIDE DE REFROIDISSEMENT (ASS)	398
	402
REDUCTEUR MARIN - MONTAGE (ASS)	628
RÉDUCTEURS (ASS)	558
	562
	566
	570
	574
	578
	582
	586
	590
	594
REFROIDISSEUR D'HUILE DE BOÎTE (ASS)	546
REFROIDISSEUR D'HUILE HYDRAULIQUE (ASS)	893
	894
REFROIDISSEUR D'HUILE MOTEUR (ASS)	145
RÉGLAGE DE COMMANDE DE DIRECT. ET DE BOÎTE	844
REGLAGE DE SIEGE (ASS)	1196
	1197
	1198
RENIFLARD	614
	618
	622
	796
	1070
	1102
RENIFLARD (DÉCHARGE DE PRESSION)	603
	609
RENIFLARD (ENS)	26
	27
RÉSERVOIR - LAVE-GLACE (ASS)	1420
	1421
RÉSERVOIR - LAVE-GLACE (ASS)	1422
	1424
	1426
RÉSERVOIR DE CARBURANT (ASS)	308
	310
	313
RÉSERVOIR DE CARBURANT (ASS)	312
RÉSERVOIR D'EAU (ASS)	190
RÉSERVOIR D'EAU (ASS)	184
	186
	188
RÉSERVOIR DU LIQUIDE DE REFROIDISSEMENT (ASS)	183
RÉSERVOIR HYDRAULIQUE ET FILTRE (ASS)	998
RESSORT	494
	495
RESSORT (BROSSE DE DÉMARREUR)	484
	485
RÉTROVISEUR (ASS)	1326
	1327
RIPPER (ASS)	1185
	1186
	1187
	1188
	1189
	1190
RIPPER (VERSION)	1133
	1134
	1135
ROBINET DE BATTERIE (ASS)	499
ROBINET DE BATTERIE (ASS) (BATTERIE)	329
	338
	345
	353
	361
	369
ROBINET DE VIDANGE (ENS)	180
ROBINET-PRÉLÈVEMENT D'ÉCHANTILLON DE LIQUIDE (ASS)	603
	609
	614
	618
	622
	998
ROBINET-PRÉLÈVEMENT D'ÉCHANTILLON DE LIQUIDE (ASS)	550
ROTATION DE LA ROUE DU VENTILATEUR SOUFFLANT	886
	1456
	1460
ROTATION DE LA ROUE DU VENTILATEUR SOUFFLANT (COMMANDE DE BULLDOZER)	1468
ROTATION DE LA ROUE DU VENTILATEUR SOUFFLANT (COMMANDE DE RIPPER)	1108
ROTATION DE LA ROUE DU VENTILATEUR SOUFFLANT (CONTACTEUR D'EXTRACTEUR DE BROCHE DE RIPPER)	888
	890
ROTATION DE LA ROUE DU VENTILATEUR SOUFFLANT (ENTRÉE D'EAU/SORTIE D'EAU)	1202
	1206
	1210
	1286
	1290
	1294
ROTATION DE LA ROUE DU VENTILATEUR SOUFFLANT (RÉGLAGE DU SIÈGE)	1408

INDEX

Désignation	Page
	1414
	1418
ROUE AV - CHAINES (ASS)	783
	784
	786
	788
	790
ROUE AV - CHAÎNES (VERSION)	782

S

SEGMENT DE BARBOTIN (ASS)	639
	640
SIEGE - COUVERCLE INFERIEUR (ASS)	1348
SIEGE - COUVERCLE INFERIEUR (ASS) (FOND)	1372
SIÈGE (ASS)	1372
	1374
	1376
	1377
	1378
	1379
	1380
	1381
	1382
	1384
	1386
	1387
SIÈGE (ASS) (LOMBAIRE)	1379
	1381
	1388
	1389
	1390
SIÈGE (ASS) (LOMBAIRE) (EN TOILE)	1380
SIÈGE (ASS) (VINYLE-LOMBAIRE)	1391
	1392
	1393
SIÈGE AVEC SUSPENSION (ASS)	1376
	1377
	1404
	1408
	1410
	1414
	1418
SIÈGE AVEC SUSPENSION (ASS)	1388
	1389
	1390
	1391
	1392
	1393
	1394
	1396
	1397
	1398
	1399
	1400
	1401
SIÈGE AVEC SUSPENSION (ASS) (LOMBAIRE)	1220
SIÈGE INCLINABLE (ASS)	1362
SIEGE RAPPORTE (SOUPAPE) (ADMISSION)	42
SIEGE RAPPORTE (SOUPAPE) (ÉCHAPPEMENT)	42
SIEGE (VERSION)	1367
SILENCIEUX (ASS)	206
SOLÉNOÏDE DE DÉMARREUR (ENS)	488
SOLÉNOÏDE DE DÉMARREUR (ENS)	472
SOLÉNOÏDE (ENS)	494
SOLÉNOÏDE (ENS) (DÉMARREUR)	484
SONDE - CIRCUIT DE CARBURANT	446
	447
	448
	449
	450
	451
	452
SONDE - CIRCUIT DE CARBURANT (DÉCÉLÉRATEUR)	228
SONDE - CIRCUIT DE CARBURANT (DIRECTION)	862
	864
SONDE - CIRCUIT DE CARBURANT (FREIN)	852
	854
SONDE - CIRCUIT DE CARBURANT (POSITION DE BRAQUAGE)	860
SOUPAPE - EAU	1202
	1206
	1286
	1290
SOUPAPE - SOLÉNOÏDE (ASS)	294
	880
	881
	1047
	1048
	1049
	1050
	1051
	1052
	1053
	1054
	1056
	1058
SOUPAPE - SOLÉNOÏDE (ASS)	671
	672
SOUPAPE - SOLÉNOÏDE (ASS) (COMMANDE DE PRESSION)	296
	297
	298

INDEX

Désignation	Page
SOUPAPE - SOLÉNOÏDE (ASS) (FONCTION INCLINAISON/ INCIDENCE)	1059
SOUPAPE D'ABAISSEMENT RAPIDE (ASS)	1041
	1042
SOUPAPE D'ARRÊT	167
SOUPAPE DE DÉRIVATION	998
SOUPAPE DE DÉRIVATION (ASS)	1022
SOUPAPE DE DERIVATION (ASS) (CLIMAT FROID UNIQUEMENT)	1036
SOUPAPE DE DIRECTION ET MONTAGE (ENS)	877
SOUPAPE DE GRAISSAGE (ENS) (REMPLISSAGE)	822
	830
	832
SOUPAPE DE MODULATION (ASS)	660
SOUPAPE DE PRIORITE (ASS)	664
SOUPAPE DE VIDANGE	678
	680
	682
	943
	948
	959
SOUPAPE D'ÉCHAPPEMENT	46
SOUPAPE ET MONTAGE-ENTRAÎNEMENT DE VENTILATEUR (ASS)	142
SOUPAPE PILOTE (ASS)	1038
	1039
SOUPAPE PILOTE (ASS) (INCLINAISON)	1039
SOUPAPE PILOTE ET MONTAGE (ASS)	650
	651
SOUPAPE SÉLECTRICE (ASS)	670
	1018
	1146
SOUPAPE SÉLECTRICE (ASS)	654
	656
	658
SOUPAPE SELECTRICE ET REGULATRICE DE PRESSION	1044
STABILISATEUR - BRAS DE POUSSEE (ASS)	1106
	1107
SUPPORT - COMMANDE (ASS)	876
SUPPORT DE MOTEUR (ASS)	106
	107
SUSPENSION A BOGIES (ASS)	815
	817
	818
	820
SUSPENSION (ASS)	816
SUSPENSION DE SIEGE - CARTER (ASS)	1298
	1302

T

Désignation	Page
TABLEAU DE BORD (ASS)	1352
TABLEAU DE BORD (ASS)	1350
TAMIS - RÉSERVOIR DE CARBURANT	250
	262
TAMIS D'ASPIRATION	536
	602
	608
	614
	618
	622
	646
	1136
TAMIS DE CLOCHE (ENS)	120
TAMIS DE RÉSERVOIR DE CARBURANT	312
TAMPON DE POUSSÉE (ASS)	1060
	1061
	1062
	1063
TAPIS DE PLANCHER	1354
	1358
TAPIS DE SOL - SPÉCIAL INFÉRIEUR	1338
	1340
	1342
TAPIS DE SOL - SPÉCIAL SUPÉRIEUR	1338
	1340
	1342
TAPIS DE SOL (INFERIEUR)	1334
TAPIS DE SOL (SUPERIEUR)	1334
TEMPS FROID (VERSION)	1
TENDEUR DE COURROIE (ASS)	12
	14
	16
	18
THERMOCONTACT (ENS) (FILTRE DE DÉRIVATION)	329
	337
	345
	353
	361
	369
THERMOSTAT-TEMPÉRATURE D'EAU	166
THERMOSTAT-TEMPÉRATURE D'EAU (92 DEGRÉS C)	158
	162
TIRANT DE BULLDOZER (ASS)	1064
TOIT ROPS (ASS)	1364
	1365
TOIT ROPS (ENS)	1363
TOLE DE PLANCHER (VERSION)	1276
TOURILLON DE BULLDOZER (ASS)	1142
	1143
TOURILLON DE BULLDOZER (VERSION)	1138
	1140

INDEX

Désignation	Page
TOURILLON DE MOTEUR (ASS)	108
TRAIN DE ROULEMENT	838 839 840 841 842 843
TRAINS PLANÉTAIRES - CARTER ET PIÈCES	536
TRANSFORMATION ELECTRIQUE (ASS)	395
TREUIL DE REMORQUAGE (ASS)	1194 1195
TREUIL DE REMORQUAGE (ENS)	1194
TRINGLERIE D'ÉQUIPEMENT (ASS)	1112
TRINGLERIE D'ÉQUIPEMENT (ASS)	1108 1110
TURBOCOMPRESSEUR - CARTOUCHE (ASS)	212 215
TURBOCOMPRESSEUR (ASS)	212 213 214 215

V

Désignation	Page
VANNE PILOTE (ASS)	1046
VENTILATEUR DÉGIVREUR (ASS)	1274
VENTILATEUR SOUFFLANT (ASS)	150 151
VENTILATEUR VARIABLE (ASS)	152
VENTILATEUR VARIABLE (ASS)	154
VENTILATEUR VARIABLE (VERSION)	148 149
VÉRIN À DOUBLE INCLINAISON (VERSION)	897
VÉRIN DE LEVAGE DE LAME DE BULLDOZER (ASS)	1000 1002 1006 1010 1012
VÉRIN DE LEVAGE DE LAME DE BULLDOZER (ASS)	898 900
VERIN DE LEVAGE DE RIPPER (ASS)	912 914 916 918 920 922
VERIN DE LEVAGE DE RIPPER (ASS) (DROITE)	1133 1134 1135
VERIN DE LEVAGE DE RIPPER (ASS) (GAUCHE)	1133 1134 1135
VERIN D'EXTRACTEUR DE BROCHE DE RIPPER (ASS)	924
VÉRIN D'INCLINAISON DE BULLDOZER (ASS)	902 904 906
VÉRIN D'INCLINAISON DE BULLDOZER (ASS) (DROITE)	897
VÉRIN D'INCLINAISON DE BULLDOZER (ASS) (GAUCHE)	897
VÉRIN D'INCLINAISON DOUBLE (ASS)	908 910
VERIN D'INCLINAISON DU RIPPER (ASS)	926 928 930
VERIN (ENS) (ÉTHER)	474
VÉRIN ET CANALISATIONS - DOUBLE INCLINAISON (ASS)	897
VERROU (ASS)	741
VERSION DE BULLDOZER	1065 1066 1067 1068
VERSION DE PRÉGRAISSAGE DE MOTEUR	134 136 138
VERSION DE TRANSFORMATION	2 3 1271
VERSION DE VENTILATEUR	147
VERSION D'ÉCLAIRAGE ARRIÈRE	424 425
VERSION POUR LES RÉGIONS POLAIRES	1
VIDANGE-ÉCOLOGIE (ASS)	548
VILEBREQUIN - POULIE (ASS)	103 104
VILEBREQUIN (ASS)	28 30 32
VITRE COULISSANTE (ENS)	1435
VITRE COULISSANTE (ENS) (DROITE)	1234
VITRE COULISSANTE (ENS) (GAUCHE)	1234
VITRE DE CABINE (ASS)	1436 1437 1438 1439 1440 1441 1442 1448 1449

INDEX

Désignation	Page
	1450
VITRE DE CABINE (ASS)	1443
	1444
	1447
VITRE DE CABINE (ASS)	1446
VITRE DE CABINE (ASS) (ARRIÈRE)(COULISSANT)	1234
VITRE DE CABINE (ASS) (CÔTÉ DROIT)(COULISSANT)	1435
VITRE DE CABINE (ASS) (CÔTÉ GAUCHE)(COULISSANT)	1435
VITRE DE CABINE (ASS) (DROITE)	1436
	1442
VITRE DE CABINE (ASS) (GAUCHE)	1437
VITRE-FIXE-DROITE (TEINTÉ)	1442
VITRE-FIXE-GAUCHE (TEINTÉ)	1443
VITRE-PATIN-DROIT (TEINTÉ)	1446
VITRE-PATIN (GAUCHE) (TEINTÉ)	1444
VITRE (TEINTÉ)	1234
	1436
	1437
	1447
	1448
VITRE (TEINTÉ)(VERT)	1449
	1450
VOLANT MOTEUR (ASS)	78

INDICE

Nombre	Página
A	
ABERTURA DE DESCARGA (CONJ)	216
ACONDICIONADOR DE AIRE (CONFIG)	1200
ACONDICIONADOR DE AIRE (CONFIG)	1200 1201
ACONDICIONADOR DE AIRE (GR)	1206 1210
ACONDICIONADOR DE AIRE (GR)	1202
ACONDICIONADOR DE REFRIGERANTE (GR)	143 144
ACOPLAMIENTO DE BOMBA (GR)	547
ACUMULADOR DE ACONDICIONADOR DE AIRE	1260 1320
ADAPTADOR DE LLENADO RÁPIDO DE COMBUSTIBLE (GR)	216 218 220 222 224 226
AGUA DE LAS CAMISAS - CALENTADOR DEL (GR)	402 410 411 412
AIRE - TUBERÍAS DE (GR)	200 202
AIRE - TUBERÍAS DE (GR)	203
AJUSTADOR DE CORREA (GR)	12 14 16 18
AJUSTADOR DEL ASIENTO (GR)	1196 1197 1198
AJUSTADOR DEL CONTROL DE DIRECCIÓN Y TRANSMISIÓN (GR)	844
ALARMA (GR)	315
ALFOMBRILLA DEL PISO	1354 1358
ALFOMBRILLA ESPECIAL DEL PISO (INFERIOR)	1338 1340 1342
ALFOMBRILLA ESPECIAL DEL PISO (SUPERIOR)	1338 1340 1342
ALFOMBRILLA INFERIOR	1334
ALFOMBRILLA SUPERIOR	1334
ALTERNADOR DE CARGA (CONFIG)	316
AMORTIGUADOR DE VIBRACIONES (GR)	56
ANTEFILTRO (CONFIG)	207 208
ANTEFILTRO (GR)	207 208 209
APOYABRAZOS (CONFIG)	1213
ÁRBOL DE LEVAS (GR)	20
ARRANQUE - INTERRUPTOR DE (GR)	503
ARRANQUE EN TIEMPO FRIO (CONFIG)	476
ARRANQUE EN TIEMPO FRIO (CONFIG)	480
ASIENTO CON SUSPENSIÓN (GR)	1404 1408 1410 1414 1418
ASIENTO DE VÁLVULA-CASQUILLO (ADMISION)	42
ASIENTO DE VÁLVULA-CASQUILLO (ESCAPE)	42
ASIENTO (GR)	1372 1374 1376 1377 1378 1379 1380 1381 1382 1384 1386 1387
ASIENTO (GR) (LUMBAR)	1379 1381 1388 1389 1390
ASIENTO (GR) (LUMBAR) (TELA)	1380
ASIENTO (GR) (VINILO)(LUMBAR)	1391 1392 1393
AUXILIAR DE ARRANQUE CON ÉTER (GR)	474
B	
BALANCÍN (GR)	105
BANCADA DE VÁLVULAS HIDRÁULICAS (GR)	1018
BARRA COMPENSADORA (GR)	746 748 750 751 752 754 756 757

INDICE

Nombre	Página
	758
	759
	760
	761
BARRA DE TIRO (GR)	692
BARRA LIMPIADORA (GR)	762
	763
BARRA LIMPIADORA (GR)	742
BARRA LIMPIADORA (GR) (LADO DERECHO)	744
BARRA LIMPIADORA (GR) (LADO IZQUIERDO)	744
BARRA LIMPIADORA(CONFIG)	742
	744
BASTIDOR DEL DESGARRADOR (GR)	1090
	1092
	1094
	1096
	1098
BASTIDOR TELESCÓPICO DEL RESORTE TENSOR (GR)	768
BASTIDOR TELESCÓPICO DEL RESORTE TENSOR (GR)	770
	772
	774
	776
	778
	780
BASTIDOR TELESCÓPICO TENSOR (CONJ)	767
BATERÍA Y CABLES (GR)	344
BATERÍA Y CABLES (GR)	328
	352
BATERÍA Y CABLES (GR)	336
BATERÍA Y CABLES (GR)	360
	368
BATERÍA (12 VOLTIOS)	328
	336
	344
	354
	362
	370
	476
	480
BATERÍA (12 VOLTIOS/SECO)	2
BLOQUE DE EMPALME (GR)	413
BLOQUE DE EMPUJE (GR)	1060
	1061
	1062
	1063
BLOQUE DESLIZANTE-JUEGO	1388
	1389
	1390
	1391
	1392
	1393
	1397
	1398
	1399
	1400
	1401
BLOQUE MOTOR (CONJ)	34
	36
BLOQUE MOTOR (GR)	38
	40
BOCINA (CONJ) (24 VOLTIOS)(TONO ALTO)	328
	336
	344
	352
	360
	368
BOCINA (CONJ) (24 VOLTIOS)(TONO BAJO)	328
	336
	344
	352
	360
	368
BOMBA - TUBERÍAS DE (GR)	942
	948
	956
BOMBA DE ACEITE DEL MOTOR (GR)	140
BOMBA DE AGUA (GR)	169
	170
	171
	172
	174
	176
BOMBA DE CEBADO DE COMBUSTIBLE (GR)	291
BOMBA DE CEBADO Y FILTRO PRIMARIO DE COMBUSTIBLE (GR)	292
BOMBA DE ENGRANAJES (GR)	991
	992
BOMBA DE ENGRANAJES (GR)	634
	636
	637
	638
BOMBA DE INYECCIÓN DE COMBUSTIBLE (GR)	286
	287
	288
	289
	290
BOMBA DE PALETAS-CARTUCHO (GR)	882
	883
BOMBA DE PALETAS (GR)	994
BOMBA DE PALETAS (GR)	996
BOMBA DE TRANSFERENCIA DE COMBUSTIBLE (GR)	294
	296
	297

INDICE

Nombre	Página
	298
	300
	302
	304
BOMBA DEL REFRIGERANTE	398
BOMBA HIDRÁULICA DEL INYECTOR UNITARIO (GR)	294
	300
	302
	304
BOMBA HIDRÁULICA DEL INYECTOR UNITARIO (GR)	294
	296
	297
	298
	302
	306
BOMBA HIDRÁULICA DEL INYECTOR UNITARIO Y MONTAJE	270
	272
	274
	276
	278
	280
	282
	284
BRAZO DE EMPUJE DERECHO (GR)	1132
BRAZO DE EMPUJE (GR)	1130
BRAZO DE EMPUJE IZQUIERDO (GR)	1131

C

CABINA (CONFIG)	1216
	1218
	1220
	1221
	1222
	1224
	1225
	1226
	1228
CABINA (GR)	1234
	1237
CABINA PARA TIEMPO FRÍO (CONFIG)	1232
CABINA PARA TIEMPO FRÍO (CONFIG)	1230
CABLES DE INYECTOR (GR)	530
CABLES DE LA CONSOLA (GR)	512
CABLES DE LA CONSOLA (GR)	508
CABLES DE LA CONSOLA (GR)	516
CABLES DE LA CONSOLA (GR)	506
CABLES DE LA PLATAFORMA (GR)	522
	526
CABLES DEL MOTOR (GR)	520
CADENA - RUEDA GUÍA (CONFIG)	782
CADENAS (GR)	836
	837
	838
CAJA DE LA SUSPENSIÓN DEL ASIENTO (GR)	1298
	1302
CAJA DEL CABRESTANTE (GR)	1070
CAJA DELANTERA (GR)	93
CAJA DELANTERA (GR)	92
CAJA Y BASTIDOR (GR)	678
	680
	682
CAJA Y PIEZAS DE LOS PLANETARIOS	536
CALCOMANÍA	858
CALCOMANÍA DE ADVERTENCIA	2
	768
	770
	772
	774
	776
	778
	780
	886
	1278
	1336
	1456
	1460
CALCOMANÍA DE ADVERTENCIA (AGUA ADENTRO/AGUA AFUERA)	1202
	1206
	1210
	1286
	1290
	1294
CALCOMANÍA DE ADVERTENCIA (ASIENTO AJUSTABLE)	1408
	1414
	1418
CALCOMANÍA DE ADVERTENCIA (BOMBA DE PRELUBRICACION)	134
	136
	138
CALCOMANÍA DE ADVERTENCIA (CONTROL DE DESGARRADOR)	1108
CALCOMANÍA DE ADVERTENCIA (CONTROL DE HOJA TOPADORA)	1468
CALCOMANÍA DE ADVERTENCIA (INTERRUPTOR DE EXTRACTOR DE PASADORES DE DESGARRADOR)	888
	890
CALCOMANÍA DE ADVERTENCIA (RADIO)	1305
CALCOMANÍA DE ADVERTENCIA (VALVULA DE VENTILACION)	2
CALCOMANIA DE FUSIBLE	513
	517
CALCOMANÍA DE IDENTIFICACIÓN	1350

INDICE

Nombre	Página
CALCOMANÍA DE IDENTIFICACIÓN (FUSIBLE)	154
	506
	508
CALCOMANÍA DE IDENTIFICACIÓN (NUMERO DE GRUPO Y SECUENCIA)	1202
	1206
	1210
	1264
	1266
	1286
	1290
	1294
CALCOMANÍA DE LA CALEFACCIÓN	398
	402
CALCOMANÍA DE MANIPULADOR DE BASURAS	1465
CALCOMANÍA (IDENTIFICACION DE COJIN DE ASIENTO)	1346
	1347
CALCOMANÍA (INSTRUCCION) (CONTROL DE HOJA TOPADORA)	1110
CALCOMANIA-NO ESCALON	398
	402
CALCOMANÍAS Y PLACAS DE IDENTIFICACIÓN (GR)	1468
CALEFACCIÓN (CONFIG)	1278
CALEFACCIÓN DE LA CABINA (GR)	1280
	1282
CALEFACCIÓN DE LA CABINA (GR)	1290
	1294
CALEFACCIÓN DE LA CABINA (GR)	1286
CALEFACCIÓN (GR)	398
	1280
	1282
CALENTADOR DEL COMBUSTIBLE (GR)	406
	408
CALENTADOR DEL REFRIGERANTE (GR)	398
	402
CAMBIO RÁPIDO DE ACEITE (GR)	132
CÁNCAMOS DE LEVANTAMIENTO DEL MOTOR (GR)	94
CANDADO (GR)	218
	248
	250
	262
	308
	312
	477
	481
	694
	700
	704
	708
	736
	896
CANTONERA DE EXTREMO (GR)	1149
CAPO Y PROTECTOR (GR)	736
CARGA - ALTERNADOR DE (GR)	318
	320
	322
	324
	326
CÁRTER - COLECTOR DEL (GR)	96
CARTUCHO, FILTRO	310
CENICERO	1280
	1282
CIGÜEÑAL - POLEA DE (GR)	103
	104
CIGÜEÑAL (GR)	30
	32
CIGÜEÑAL (GR)	28
CILINDRO (CONJ) (ETER)	474
CILINDRO DE DOBLE INCLINACION (CONFIG)	897
CILINDRO DE DOBLE INCLINACIÓN (GR)	908
	910
CILINDRO DE DOBLE INCLINACION Y TUBERIAS (GR)	897
CILINDRO DE INCLINACIÓN DE LA HOJA TOPADORA (GR)	902
	904
	906
CILINDRO DE INCLINACIÓN DE LA HOJA TOPADORA (GR) (LADO DERECHO)	897
CILINDRO DE INCLINACIÓN DE LA HOJA TOPADORA (GR) (LADO IZQUIERDO)	897
CILINDRO DE INCLINACIÓN DEL DESGARRADOR (GR)	926
	928
	930
CILINDRO DE LEVANTAMIENTO - TUBERÍAS DEL (GR)	934
	936
CILINDRO DE LEVANTAMIENTO DE LA HOJA TOPADORA (GR)	898
	900
CILINDRO DE LEVANTAMIENTO DE LA HOJA TOPADORA (GR)	1000
	1002
	1006
	1010
	1012
CILINDRO DE LEVANTAMIENTO DEL DESGARRADOR (GR)	912
	914
	916
	918
	920
	922

INDICE

Nombre	Página
CILINDRO DE LEVANTAMIENTO DEL DESGARRADOR (GR) (LADO DERECHO)	1133
	1134
	1135
CILINDRO DE LEVANTAMIENTO DEL DESGARRADOR (GR) (LADO IZQUIERDO)	1133
	1134
	1135
CILINDRO DEL EXTRACTOR DE PASADOR DEL DESGARRADOR (GR)	924
CINTA AISLANTE	1442
	1443
CINTURÓN DE SEGURIDAD (GR)	1390
CINTURÓN DE SEGURIDAD (GR)	1368
	1369
	1370
	1386
	1387
CINTURÓN DE SEGURIDAD (GR) (RETRACTIL)	1379
	1380
	1381
	1388
	1389
	1391
	1392
	1393
COLADOR (CONJ)	998
COLADOR DE COMBUSTIBLE	308
COLADOR DEL TANQUE DE COMBUSTIBLE	312
COMBUSTIBLE - TANQUE DE (GR)	310
COMBUSTIBLE - TANQUE DE (GR)	308
	313
COMBUSTIBLE - TANQUE DE (GR)	312
COMPARTIMIENTO DEL MOTOR (GR)	694
	698
COMPRESOR DE REFRIGERANTE (GR)	1238
	1239
	1240
	1241
	1242
	1244
	1246
	1248
CONDENSADOR DE REFRIGERANTE (GR)	1264
	1266
	1268
CONDENSADOR DEL REFRIGERANTE Y MONTAJE (GR)	1250
	1252
	1260
CONDENSADOR DEL REFRIGERANTE Y MONTAJE (GR)	1256
CONEXIÓN	746
CONEXION DE ACONDICIONADOR DE AIRE (CONJ)	1320
CONEXION DE ACONDICIONADOR DE AIRE (CONJ)	1260
CONEXIÓN DE ENGRASE	18
	70
	76
	746
	748
	752
	757
	786
	824
	826
	828
	834
	902
	904
	906
	908
	910
	912
	914
	916
	918
	920
	930
	1089
	1090
	1092
	1094
	1096
	1098
	1103
	1104
	1114
CONEXIÓN DE ENGRASE (ROSCA DE 1/8-27)	582
	754
	759
	760
	761
	922
	1064
CONFIGURACIÓN DE ASIENTO	1367
CONFIGURACIÓN DE ELIMINACIÓN DE BASURAS	4
CONFIGURACIÓN DE MÁQUINA PARA CLIMAS FRÍOS	2
CONFIGURACIÓN DE MODIFICACIÓN	2
	3
CONFIGURACIÓN DE MOTORES	6
	8
	10
CONFIGURACIÓN DE TRANSFORMACIÓN	1271

INDICE

Nombre	Página
CONFIGURACIÓN ELECTRÓNICA DE LA MÁQUINA	1
CONFIGURACIÓN ESPECIAL PARA EL OPERADOR	1338
	1340
	1342
CONFIGURACIÓN PARA CLIMA FRÍO	1
CONFIGURACIÓN PARA REGIONES ÁRTICAS	1
CONTENIDO DEL GRUPO DE GUARDABARROS	700
	702
	704
CONTRAPESO (GR)	686
	688
	689
CONTRAPESO TRASERO Y BARRA (CONFIG)	684
CONTROL DE AGUA (GR)	1270
CONTROL DE DIRECCIÓN Y TRANSMISIÓN (GR)	862
	864
	866
CONTROL DE DIRECCIÓN Y TRANSMISIÓN (GR)	860
CONTROL DE INCLINACIÓN DUAL (CONFIG)	884
CONTROL DE LA PERILLA	1280
	1282
CONTROL DE LA TRANSMISIÓN Y MONTAJE (GR)	538
CONTROL DE MONITOR (GR) (SISTEMA MONITOR CATERPILLAR)	1352
CONTROL DE MONITOREO (GR)	1350
CONTROL DE REMOLQUE DEL MALACATE (GR)	1082
CONTROL DE TREN DE FUERZA (GR)	391
CONTROL DEL DECELERADOR (GR)	228
	230
	232
CONTROL DEL FRENO DE ESTACIONAMIENTO	858
CONTROL DEL FRENO (GR)	852
CONTROL DEL FRENO (GR)	854
	856
CONTROL DEL MALACATE (GR)	1086
CONTROL ELECTRÓNICO (CONJ) (LUZ DE TABLERO)	1350
	1352
CONTROL ELECTRÓNICO DE CLASIFICACIÓN DE MOTOR (GR)	384
	385
	386
CONTROL ELECTRÓNICO DEL MOTOR (GR)	387
	388
	389
	390
CONTROL ELECTRÓNICO DEL MOTOR Y MONTAJE	379
	380
CONTROL ELECTRONICO DEL REDUCTOR DE LA LUZ INTERIOR DEL SISTEMA MONITOR (GR)	1269
CONTROL ELECTRÓNICO (GR)	381
	382
	383
	860
CONTROL ELECTRÓNICO Y MONTAJE (GR)	376
	377
	378
CONTROL HIDRÁULICO (CONFIG)	886
	888
CONTROL HIDRÁULICO (CONFIG)	890
	892
CONTROL HIDRÁULICO DE LA TRANSMISIÓN (GR)	540
	542
	544
CONTROL NO PROGRAMADO (GR)	377
	392
	393
	394
	471
CONVERTIDOR DE PAR (GR)	642
	644
	646
CONVERTIDOR ELÉCTRICO (GR)	395
CORREA TRAPEZOIDAL	109
	152
	154
	318
	324
	326
	1242
	1244
	1248
CRISTAL (LUZ DE TECHO)	414
CRONOMETRO DE DEMORA DE ACTIVACION (CONJ) (24 VOLTIOS)	1261
	1320
CRUCETA Y COJINETE (GR)	649
CUBIERTA INFERIOR DEL ASIENTO DEL OPERADOR (GR)	1348
CUBIERTA INFERIOR DEL ASIENTO DEL OPERADOR (GR) (PARTE INFERIOR)	1372
CULATA DE CILINDROS (CONJ)	43
	44
CULATA DE CILINDROS (CONJ)	41
	42

INDICE

Nombre	Página
CULATA DE CILINDROS (GR)	45
	46
	48
	50
	52
	54

D

DERIVACIÓN - VÁLVULA DE (GR)	1022
DESGARRADOR (CONFIG)	1133
	1134
	1135
DESGARRADOR (GR)	1185
	1186
	1187
	1188
	1189
	1190
DESLIZANTE	1438
	1449
DETECTOR DE POSICIÓN (SISTEMA DE COMBUST.) (GR)	446
	447
	448
	449
	450
	451
	452
DETECTOR DE POSICIÓN (SISTEMA DE COMBUST.) (GR) (DECELERADOR)	228
DETECTOR DE POSICIÓN (SISTEMA DE COMBUST.) (GR) (FRENO)	852
	854
DETECTOR DE POSICIÓN (SISTEMA DE COMBUST.) (GR) (POSICIÓN DE VIRAJE)	860
DETECTOR DE POSICIÓN (SISTEMA DE COMBUST.) (GR) (SENTIDO)	862
	864
DETECTOR MAGNÉTICO (GR)	443
DIENTE DE DESGARRADOR (GR)	1191
	1192
	1193
DISYUNTOR (CONJ) (10 A)	506
	512
	516
DISYUNTOR (CONJ) (10 A) (ARRANQUE DEL MOTOR)	509
	512
	516
DISYUNTOR (CONJ) (10 A) (AUXILIAR)	509
DISYUNTOR (CONJ) (10 A) (LLAVE)	508
DISYUNTOR (CONJ) (105 AMP)	506
DISYUNTOR (CONJ) (105 AMP) (ALTERNADOR)	508
	512
	516
DISYUNTOR (CONJ) (105 AMP) (PRINCIPAL)	508
	512
	516
DISYUNTOR (CONJ) (15 A)	152
	506
	512
	516
	1252
	1257
	1260
DISYUNTOR (CONJ) (15 A) (FARO DELANTERO)	512
	516
DISYUNTOR (CONJ) (15 A) (LÁMPARA DE FARO DELANTERO)	508
DISYUNTOR (CONJ) (15 A) (MOTOR)	508
	512
	516
DISYUNTOR (CONJ) (15 A) (TOMACORRIENTE)	509
	512
	516
DISYUNTOR (CONJ) (15 A) (VENTILADOR DEL MOTOR)	512
	516
DISYUNTOR (CONJ) (15 A) (VENTILADOR SOPLADOR)	509
DISYUNTOR (GR)	499
DISYUNTOR (GR) (BATERÍA)	329
	338
	345
	353
	361
	369
DRENAJE DE SEGURIDAD ECOLÓGICA (GR)	548

E

EJE DE MANDO PRINCIPAL (GR)	641
EJE DEL TREN DE FUERZA (GR)	531
	532
	533
	534
ELEMENTO ACONDICIONADOR DE REFRIGERANTE (CONJ)	143
ELEMENTO DE FILTRO	202
	203
	246
	252
	292
	1086
ELEMENTO DE FILTRO DE ACEITE (CONJ)	552

INDICE

Nombre	Página
	554
	556
	614
	618
	622
ELEMENTO DE FILTRO DE ACEITE (CONJ) (HIDRAULICO/FLUJO INVERSO) (DESECHABLE)	998
ELEMENTO DE FILTRO (FLUÍDO RESISTENTE AL FUEGO)	998
ELEMENTO DEL CALENTADOR DEL AGUA DE LAS CAMISAS	411
	412
ELEMENTO DEL CALENTADOR DEL AGUA DE LAS CAMISAS (120 VOLTIOS/1500 VATIOS)	410
ELEMENTO PRIMARIO (CONJ)	196
ELEMENTO SECUNDARIO (CONJ)	196
EMBRAGUE Y ENGRANAJE (GR)	1074
EMPAQUETADURA (BOMBA DE CEBADO DE COMBUSTIBLE)	246
	291
	292
EMPUÑADURA DEL INTERRUPTOR (GR)	1110
EMPUÑADURA DEL INTERRUPTOR (GR)	502
ENFRIADOR DE ACEITE DE LA TRANSMISIÓN (GR)	546
ENFRIADOR DE ACEITE DEL MOTOR (GR)	145
ENFRIADOR DEL ACEITE HIDRAULICO (GR)	893
	894
ENGRANAJE ACCESORIO (GR)	1100
ENGRANAJE DE DIRECCIÓN (GR)	870
	872
ENGRANAJE DE TRANSFERENCIA Y CORONA (GR)	598
ENGRANAJE DELANTERO (GR)	80
ENGRANAJE TRASERO (GR)	82
	86
ESCAPE DE GASES (GR)	116
ESCOBILLA (CONJ)	494
ESCOBILLA (CONJ) (MOTOR DE ARRANQUE)	484
ESLABÓN DE CADENA (CONJ)	792
	793
	794
ESTABILIZADOR DEL BRAZO DE EMPUJE (GR)	1106
	1107
ESTRUCTURA ROPS (GR)	1364
	1365
ETIQUETA DE ADVERTENCIA (GR)	1465
	1466
ETIQUETA-SONIDO DE OPERADOR	3
	1402
EXPULSOR DE POLVO (GR)	197
EXTENSIÓN DEL RESPALDO (GR)	1272
EXTENSIÓN DEL RESPALDO (GR)	1273
EXTENSIÓN DEL RESPALDO (GR)	1386
	1387
EXTRACTOR DE PASADOR (CONFIG)	1125
EXTRACTOR DE PASADOR (GR)	1126
	1128

F

Nombre	Página
FILTRO (BOMBA DE AGUA)	172
	174
	176
FILTRO (BOMBA HIDRAULICA DE LA UNIDAD DEL INYECTOR)	234
	242
	244
FILTRO (CONJ)	310
FILTRO (CONJ) (SEPARADOR DE AGUA Y COMBUSTIBLE)	253
FILTRO DE ACEITE DEL MOTOR (CONJ)	550
FILTRO DE ACEITE (GR)	550
	552
	554
	556
FILTRO DE AIRE (CABINA)	1280
	1282
FILTRO DE AIRE (GR)	194
	195
	196
FILTRO DE COMBUSTIBLE (CONJ)	264
FILTRO DE COMBUSTIBLE (GR)	248
	250
FILTRO DE COMBUSTIBLE Y SEPARADOR DE AGUA (CONJ)	292
FILTRO DE COMBUSTIBLE Y SEPARADOR DE AGUA (CONJ)	246
FILTRO DE COMBUSTIBLE Y SEPARADOR DE AGUA (CONJ) (PRIMARIO)	252
FILTRO DE COMBUSTIBLE Y SEPARADOR DE AGUA (GR)	253
	254
FILTRO DE COMBUSTIBLE Y SEPARADOR DE AGUA (GR)	252
FILTRO DE DERIVACIÓN (GR)	1069
FILTRO ESPONJOSO	330
	337
	345
	354
	362
	370
FILTRO MAGNÉTICO	1136
FILTRO Y TUBERÍAS DE COMBUSTIBLE (GR)	246

INDICE

Nombre	Página
FRENO Y EMBRAGUE DE DIRECCIÓN (GR)	850
FRENO Y EMBRAGUE DE DIRECCIÓN (GR)	848
FUSIBLE	398
FUSIBLE (10 A)	506
	508
	513
	517
FUSIBLE (1/4 A)	152
	154
FUSIBLE (15 A)	152
	154
	506
	508
	513
	517
FUSIBLE (20 A)	506
	508
	512
	516

G

GRUPO DE CANTONERA Y CUCHILLA	1175
	1176
	1177
	1178
	1179
	1180
	1181
	1182
GRUPO DE LUBRICACIÓN DE BARRA ESTABILIZADORA	796
GRUPO DE LUCES	426
GRUPO DE MONTAJE	1336
GRUPO DE MONTAJE DE LA CABINA	1334
GRUPO DE SELLO	172
	174
GRUPO DE VÁLVULAS	1020
	1038
	1040
	1041
GRUPO DE 3 VÁLVULAS HIDRÁULICAS	1020
GUARDABARROS (CONFIG)	706
GUARDABARROS (GR)	708
GUÍA DE RODILLO (GR)	1101
GUIACABLE DEL MALACATE (GR)	1089

H

HOJA DE LIMPIAPARABRISAS (CONJ)	1152
	1456
	1460
HOJA DE LIMPIAPARABRISAS (CONJ)	1456
	1460
HOJA SEMIUNIVERSAL (CONJ)	1154
HOJA SEMIUNIVERSAL (GR)	1159
	1160
	1162
	1164
HOJA TOPADORA (CONFIG)	1065
	1066
	1067
	1068
HOJA UNIVERSAL (CONJ)	1156
	1157
	1158
HOJA UNIVERSAL (GR)	1166
	1168
	1170
	1172
HOJA Y CUCHILLA (GR)	1149
	1150
	1151

I

ILUMINACION TRASERA (CONFIG)	424
	425
IMPULSOR DE VENTILADOR (GR)	57
	58
	59
	60
	61
	62
	63
	64
	65
	66
	67
	68
	70
	72
	73
	74
	75
	76
IMPULSOR DE VENTILADOR (GR) (ARTICO)	1
INDICADOR DEL NIVEL DE ACEITE (VARILLA) (GR)	118
INDICADOR Y TAPA (CONJ)	310
INSONORIZADOR (CONFIG)	3
	1402
INSTALACIÓN DE RADIO (GR)	1305
INSTALACIÓN DEL MALACATE (CONFIG)	1102
INTERRUPTOR (CONJ)	504
INTERRUPTOR (CONJ) (BASCULANTE) (CONSOLA LEVANTAR/BAJAR)	844
INTERRUPTOR (CONJ) (CONTROL DE LA PUNTA)	502

INDICE

Nombre	Página
INTERRUPTOR (CONJ) (ILUMINADO CON 24 VOLTIOS) (ACELERACIÓN)	522 526
INTERRUPTOR (CONJ) (LUZ DELANTERA)	523 527
INTERRUPTOR (CONJ) (LUZ TRASERA)	522 526
INTERRUPTOR (CONJ) (SENCILLO/DOBLE CONTROL DE INCLINACIÓN)	502
INTERRUPTOR (CONJ) (SINCRONIZADOR DE LUBRICACIÓN)	134
INTERRUPTOR DE CONTROL DEL CALENTADOR	398 402
INTERRUPTOR DE CRONOMETRO (GR)	504
INTERRUPTOR DE CRONOMETRO (GR) (PRELUBRICACIÓN)	136
INTERRUPTOR DE DERIVACIÓN	329 337 497 498
INTERRUPTOR DE DERIVACIÓN (FILTRO DE PRESIÓN DELTREN DE FUERZA)	353
INTERRUPTOR DE DERIVACIÓN (FILTRO DE TREN DE FUERZA)	345
INTERRUPTOR DE FLUJO (GR)	7 9 11 500 501
INTERRUPTOR DE LÍMITE (CONJ) (FRENO)	852 854 856
INTERRUPTOR DE LÍMITE (CONJ) (REVERSA)	860 862 864
INTERRUPTOR DE PRESIÓN (CONJ)	1261 1320
INTERRUPTOR DE PRESIÓN (CONJ) (ACEITE)	134 136 138
INTERRUPTOR DE PRESIÓN (CONJ) (ALTO/BAJO)	1253 1256 1260 1308 1312 1316 1320
INTERRUPTOR DE TEMPERATURA (CONJ) (FILTRO DE DERIVACIÓN)	329 337 345 353 361 369
INTERRUPTOR DE VOLQUETE (CONJ) (APAGADO/ENCENDIDO DEL ACONDICIONADOR DE AIRE)	1280 1282
INTERRUPTOR DE VOLQUETE (CONJ) (AUXILIAR)	522 526
INTERRUPTOR DE VOLQUETE (CONJ) (DE TRABA)(EXTRACTOR DE PASADORES DE DESGARRADOR)	888 890
INTERRUPTOR DE VOLQUETE (CONJ) (FRENO DE ESTACIONAMIENTO)	858
INTERRUPTOR DE VOLQUETE (CONJ) (LUZ LATERAL)	523 526
INTERRUPTOR DE VOLQUETE (CONJ) (TRABA)	886
INTERRUPTOR DE VOLQUETE (GR) (AUXILIAR DE ARRANQUE)	522 526
INTERRUPTOR DE VOLQUETE (GR) (CONTROL DEL VENTILADOR)	1274
INTERRUPTOR DE VOLQUETE (GR) (DE TRABA)(EXTRACTOR DE PASADORES DE DESGARRADOR)	888 890
INTERRUPTOR DE VOLQUETE (GR) (OPERADOR)	523 526
INTERRUPTOR DEL TERMOSTATO (CONJ)	1202
INTERRUPTOR DEL TERMOSTATO (CONJ)	1206 1210
INTERRUPTOR (GR)	527
INTERRUPTOR (GR) (BOCINA)	522
INTERRUPTOR MAGNÉTICO (CONJ) (PRELUBRICACIÓN)	138
INTERRUPTOR MAGNÉTICO (CONJ) (RELE PRINCIPAL)	506 508 512 516
INTERRUPTOR MAGNÉTICO (GR)	506 512 516
INTERRUPTOR MAGNÉTICO (GR)	477
INTERRUPTOR MAGNÉTICO (GR) (INTERRUPTOR DE DESCONEXION)	480
INTERRUPTOR MAGNÉTICO (GR) (RELÉ DE ARRANQUE)	508

INDICE

Nombre	Página
INTERRUPTOR PULSADOR (CONJ) (CAMBIAR A UNA MARCHA SUPERIOR)	876
INTERRUPTOR PULSADOR (CONJ) (CAMBIO DESCENDENTE)	876
INTERRUPTOR ROTATIVO (CONJ) (LIMPIA/LAVAPARABRISAS)	1456
	1460
INTERRUPTOR ROTATIVO (CONJ) (VELOCIDAD DEL VENTILADOR)	1282
INTERRUPTOR ROTATIVO (CONJ) (VELOCIDAD DEL VENTILADOR)	1280
INYECTOR DE COMBUSTIBLE (GR)	255
	256
	257
	258
	259
	286
J	
JUEGO - BOMBA DE INYECCCION DE COMBUSTIBLE (RECONSTRUCCIÓN DE BOMBA HIDRÁULICA DE LA UNIDAD DE INYECCIÓN)	300
	302
JUEGO DE AJUSTE DEL ASIENTO (SOPORTE INFERIOR DEL ASIENTO)	1348
JUEGO DE ALDABA	1444
	1446
JUEGO DE AMORTIGUADOR (EXTENSION DEL RESPALDO)	1272
JUEGO DE AMORTIGUADOR (RESPALDO DE VINILO)	1273
JUEGO DE ASPA DE VENTILADOR	152
JUEGO DE ATADURA	1410
	1414
JUEGO DE BOMBA (RECONSTRUCCIÓN DE BOMBA HIDRÁULICA DE LA UNIDAD DE INYECCIÓN)	306
JUEGO DE BOTÓN	1298
	1302
JUEGO DE BOTÓN DEL ASIENTO	1372
JUEGO DE BOTÓN DEL ASIENTO (ASIENTO DE SUSPENSION)	1374
JUEGO DE CAJA	1410
JUEGO DE COJÍN DEL ASIENTO (ASIENTO DE SUSPENSION)	1374
JUEGO DE COJÍN DEL ASIENTO (VINILO)	1372
JUEGO DE COJINETES	1299
	1303
JUEGO DE COJINETES (ARRANQUE)	494
JUEGO DE COJINETES (HORQUILLA)	302
JUEGO DE COJINETES (HORQUILLA, BOMBA HIDRÁULICA DE LA UNIDAD DE INYECCIÓN)	300
	306
JUEGO DE COMPENSADOR (BOMBA HIDRAULICA DE LA UNIDAD DEL INYECTOR)	300
	302
	306
JUEGO DE COMPRESOR	1410
JUEGO DE CORREAS TRAPEZOIDALES	109
JUEGO DE CORREAS TRAPEZOIDALES (INCLUYE 4 CORREAS)	57
	58
	59
	62
	63
	64
	65
	66
	70
	74
	75
	76
	109
JUEGO DE ENCHUFE (12 CLAVIJAS)	1257
JUEGO DE ENCHUFE (2 CLAVIJAS)	134
	136
	138
	352
	360
	368
	444
	672
	844
	1203
	1256
	1287
	1291
JUEGO DE ENCHUFE (3 CLAVIJAS)	48
	50
	52
	453
	454
	455
	456
	459
	460
	464
	1257
JUEGO DE ENCHUFE (3 CLAVIJAS) (SENSOR DE LA PRESIÓN)	457
	458
	461
	462
JUEGO DE ENCHUFE (3 CLAVIJAS) (SENSOR DE VELOCIDAD DEL SINCRONIZADOR DEL MOTOR)	465

INDICE

Nombre	Página
JUEGO DE ENCHUFE (4 CLAVIJAS)	352
	360
	368
	506
	508
	512
	516
	1428
	1432
JUEGO DE ENCHUFE (6 CLAVIJAS)	1202
	1206
	1286
	1290
	1428
	1432
JUEGO DE ENCHUFE (8 CLAVIJAS)	522
JUEGO DE ENGRANAJE DEL MOTOR DE ARRANQUE	495
JUEGO DE ESCOBILLAS	1203
	1206
	1264
	1287
	1291
JUEGO DE FILTRO DE COMBUSTIBLE Y SEPARADOR DE AGUA	246
	252
	292
JUEGO DE FILTRO DE TAPA (TANQUE DE COMBUSTIBLE)	308
	313
JUEGO DE FUNDA DE LA SUSPENSIÓN DEL ASIENTO	1408
	1418
JUEGO DE GUÍA	1444
	1446
JUEGO DE HOJA DE LIMPIAPARABRISAS	1457
	1461
JUEGO DE INCLINACIÓN DE ASIENTO (SOPORTE INFERIOR DEL ASIENTO)	1348
JUEGO DE INCLINACIÓN TRASERA (SOPORTE INFERIOR DEL ASIENTO)	1348
JUEGO DE INDICADOR	1299
	1302
JUEGO DE INSTALACIÓN	198
JUEGO DE MAZO DE CABLES (ASIENTO CON SUSPENSIÓN DE AIRE)	1410
	1414
JUEGO DE NÚCLEO (PARTE TRASERA)	994
	996
JUEGO DE PALETA DE BOMBA	882
	883
	994
	996
JUEGO DE PANEL DEL RESPALDO DEL ASIENTO	1372
JUEGO DE PANEL DEL RESPALDO DEL ASIENTO (ASIENTO DE SUSPENSION)	1374
JUEGO DE PARAGOLPES	1298
	1302
JUEGO DE PERNO RETENEDOR	392
	393
	394
JUEGO DE REACONDICIONAMIENTO	60
	72
JUEGO DE RECEPTÁCULO (12 CLAVIJAS)	858
	1257
JUEGO DE RECEPTÁCULO (2 CLAVIJAS)	74
	134
	136
	138
	152
	154
	315
	328
	329
	336
	344
	345
	352
	353
	360
	361
	368
	369
	416
	417
	443
	444
	466
	467
	474
	480
	498
	522
	526
	658
	844
	1051
	1052
	1053
	1056
	1202
	1203
	1206
	1211
	1256
	1260
	1264
	1266
	1286

INDICE

Nombre	Página
	1287
	1290
	1291
	1294
	1308
	1312
	1316
	1320
	1410
	1414
JUEGO DE RECEPTÁCULO (3 CLAVIJAS)	74
	152
	154
	158
	162
	166
	264
	414
	446
	447
	448
	449
	450
	451
	452
	463
	468
	469
	470
	888
	890
	1110
	1257
	1280
	1282
	1428
	1432
JUEGO DE RECEPTÁCULO (4 CLAVIJAS)	445
	880
	1047
	1048
	1049
	1054
	1320
	1428
	1432
JUEGO DE RECEPTÁCULO (6 CLAVIJAS)	504
	876
	1202
	1206
	1211
	1269
	1280
	1282
	1286
	1290
	1294
	1330
	1331
	1332
	1452
	1454
	1456
	1460
JUEGO DE RECONSTRUCCIÓN	1306
JUEGO DE RECONSTRUCCIÓN DE LA BOMBA (AGUA)	176
JUEGO DE RECONSTRUCCIÓN DE LA BOMBA DE AGUA	172
	174
JUEGO DE RESORTE DE HOJA DE BALLESTA	1442
	1443
JUEGO DE RESORTES	1298
	1302
JUEGO DE RESORTES (AIRE)	1410
JUEGO DE RESPIRADERO	218
JUEGO DE RESTRICCIÓN DEL CINTURÓN	1408
	1418
JUEGO DE RODILLO	1408
	1410
	1414
	1418
JUEGO DE SEGUIDOR	1298
	1299
	1303
JUEGO DE SELLO DE CILINDRO HIDRAULICO	900
	902
	926
	928
JUEGO DE SELLOS	60
	72
	260
	294
	296
	297
	660
	671
	880
	1043
	1047
	1048
JUEGO DE SELLOS (BOMBA HIDRAULICA DE LA UNIDAD DEL INYECTOR)	300
	302
	306
JUEGO DE SELLOS (UNIDAD INYECTORA HIDRAULICA)	298

INDICE

Nombre	Página
JUEGO DE SELLOS (VALVULA DE SOLENOIDE)	1050, 1053, 1056
JUEGO DE SELLOS (VALVULA DE SOLENOIDE DE MANDO DE VENTILADOR)	1052
JUEGO DE TAPÓN (BOMBA HIDRAULICA DE LA UNIDAD DEL INYECTOR)	300, 302, 306
JUEGO DE TERMINAL	489, 495
JUEGO DE TERMINAL DE ALTERNADOR	320, 322
JUEGO DE TERMINAL DE RELÉ	322
JUEGO DE TERMINAL DE RELÉ (ALTERNADOR)	320
JUEGO DE TERMINAL (MOTOR DE ARRANQUE)	485
JUEGO DE TORNILLERÍA	1054, 1203, 1287, 1291, 1410, 1414
JUEGO DE TORNILLERÍA, JUNTAS Y CALCES	1102, 1104
JUEGO DE VENTANAS	1306
JUNTA UNIVERSAL (GR)	649

L

Nombre	Página
LÁMPARA DE FARO DELANTERO (24 VOLTIOS) (REFLECTOR)	418, 419
LÁMPARA DEL TECHO (GR)	414
LÁMPARA DEL TECHO (GR) (24 VOLTIOS)(CON INTERRUPTOR)	1234
LÁMPARA (24 VOLTIOS)	522, 526, 1352
LÁMPARA (24 VOLTIOS) (CÚPULA)	414
LÁMPARA (24 VOLTIOS) (REFLECTOR)	415
LÁMPARA (24 VOLTIOS) (65 VATIOS)	416
LÁMPARA (24 VOLTIOS)(65 VATIOS)	417
LÁMPARA (28 VOLTIOS)	1350
LAVAPARABRISAS DE LA VENTANA (GR)	1432
LAVAPARABRISAS DE LA VENTANA (GR)	1428
LENTE-ROJO	1350, 1352
LIMPIAPARABRISAS DE LA VENTANA (GR)	1454, 1456, 1460
LIMPIAPARABRISAS DE LA VENTANA (GR)	1452
LÍNEAS ÁRTICAS (GR)	932
LLAVE	308, 312
LLAVE (DESCONECTAR BATERIA)	499
LUBRICACIÓN DE EJE PIVOTE (GR)	798, 800
LUBRICANTE DE COJINETE	73
LUCES AUXILIARES (GR)	427, 428
LUCES (CONFIG)	420, 422
LUCES DE REFLECTOR (GR)	429, 430, 431, 432
LUCES DE SEÑALES-BASE	1352
LUCES DEL DESGARRADOR (GR)	442
LUCES DELANTERAS (GR)	434, 435, 436, 437, 438
LUCES TRASERAS (GR)	439, 440

M

Nombre	Página
MALACATE - REMOLQUE (CONFIG)	1194
MALACATE DE REMOLQUE (GR)	1194, 1195
MANDO DE BOMBA HIDRÁULICA INYECTORA (GR)	239, 240, 242
MANDO DE BOMBA HIDRÁULICA INYECTORA (GR)	234, 236, 237, 238, 244
MANDO DEL MALACATE (GR)	1174
MANDO FINAL (GR)	558, 562, 566, 570, 574, 578, 582, 586, 590, 594
MANGUERA (CONJ) (ARTICO)	939
MANGUITO DE EMPALME DE CABLE	397
MAZO DE CABLES (RECEPTÁCULO) (SENSOR DE LA PRESIÓN)	457

INDICE

Nombre	Página
MAZO DE CABLES (SENSOR DE LA PRESIÓN)	457
MECANISMO DE VÁLVULAS (GR)	110
MÓDULO DEL OPERADOR (CONJ)	1328 1329
MÓDULO DEL TACÓMETRO Y DEL VELOCÍMETRO (GR)	1332
MODULO ELECTRÓNICO DE CUATRO INDICADORES (GR)	1330 1331
MONTAJE DE CILINDRO (GR)	1114
MONTAJE DE LA BOMBA (GR)	1115
MONTAJE DE LA ESTRUCTURA ROPS (GR)	1337
MONTAJE DE LA TRANSMISIÓN (GR)	628
MONTAJE DEL DESGARRADOR (GR)	1116 1118 1120 1122
MONTAJE DEL MALACATE (GR)	1124
MOTOR - SOPORTE DEL (GR)	106 107
MOTOR DE ARRANQUE ELÉCTRICO (GR)	484 488 491 492 494
MOTOR ELÉCTRICO (GR)	1266
MOTOR ELÉCTRICO (GR) (27 VOLTIOS)	1211 1294
MULTIPLE - PROTECTOR DEL	210
MÚLTIPLE DE ESCAPE (GR)	204 205
MÚLTIPLE Y VÁLVULA (GR)	874 875
MÚLTIPLE Y VÁLVULA (GR)	626 627
MUÑÓN DE LA HOJA TOPADORA (CONFIG)	1138 1140
MUÑÓN DE LA HOJA TOPADORA (GR)	1142 1143
MUÑÓN DEL MOTOR (GR)	108

N

Nombre	Página
NÚCLEO DE TURBOCOMPRESOR (GR)	212 215
NÚCLEO DEL ENFRIADOR DE ACEITE (CONJ) (MOTOR)	145 163 167
NÚCLEO DEL ENFRIADOR DE ACEITE (GR)	163 167
NÚCLEO DEL ENFRIADOR DE ACEITE (GR)	146

P

Nombre	Página
PANTALLA (CONJ)	998
PANTALLA DE MONITOR	152 154
PASO VARIABLE DEL VENTILADOR (GR)	154
PASO VARIABLE DEL VENTILADOR (GR)	152
PERILLA	1235 1460
PERILLA (AJUSTE DEL POSABRAZOS)	844
PERILLA DE BOCINA	522 527
PERILLA LUMBAR	1347
PERNO (1-14X3,75 PULGADAS)	598
PISTÓN Y BIELA (GR)	98 99
PIVOTE DEL LIMPIADOR (GR)	1464
PLACA-CAT	1194 1195
PLACA DE ADVERTENCIA (ACEITE DE RESORTE TENSOR)	768 770 772 774 776 778 780
PLACA DE ADVERTENCIA (CALENTADOR DEL REFRIGERANTE DEL MOTOR)	398 402
PLACA DE ADVERTENCIA (CALENTADORES)	398 402
PLACA DE ADVERTENCIA (RESORTE DE AMORTIGUACION)	744 768 770 772 774 776 778 780 848
PLACA DE CONTROL	1350 1352
PLACA DE INSTRUCCIONES (ACONDICIONADOR DE AIRE)	1200 1201
PLACA DEL TABLERO	1280 1282 1350 1352
PLACA-INFORMACION DE SERVICIO	1468
PLANCHA DE DESGASTE (GR)	1183 1184

INDICE

Nombre	Página
PLANCHA DEL PISO (CONFIG)	1276
PLATAFORMA DE LA CABINA (GR)	1354
	1358
POLEA DEL ALTERNADOR	324
	326
PORTAESCOBILLAS (CONJ)	495
PORTAESCOBILLAS (CONJ) (ESCOBILLAS DEL MOTOR DE ARRANQUE)	484
PORTAFUSIBLE (CONJ)	506
	508
	512
	516
POSABRAZOS (GR)	1214
POSENFRIADOR DE AGUA (GR)	192
PRELUBRICACION DEL MOTOR (CONFIG)	136
	138
PRELUBRICACION DEL MOTOR (CONFIG)	134
PRESIÓN - VÁLVULA DE CONTROL DE (GR)	264
	662
PRESIÓN - VÁLVULA DE CONTROL DE (GR)	314
	1144
PRESIÓN - VÁLVULA DE CONTROL DE (GR)	1040
PRIORIDAD - VÁLVULA DE (GR)	664
PROTECTOR ABISAGRADO (CONJ)	716
PROTECTOR CONTRA ARENA (GR)	713
PROTECTOR CONTRA EL VANDALISMO (GR)	1277
PROTECTOR CONTRA ROCAS (GR)	732
	733
PROTECTOR DE LA RUEDA GUÍA (CONFIG)	718
PROTECTOR DE MANDO FINAL (GR)	714
PROTECTOR DE SELLO (GR)	734
	735
PROTECTOR DEL EJE IMPULSOR (GR)	600
PROTECTOR DEL EJE PIVOTE (GR)	724
PROTECTOR DEL RADIADOR (GR)	726
	728
PROTECTOR INFERIOR (GR)	720
	722
PROTECTOR POSTERIOR (GR)	730

R

Nombre	Página
RADIADOR (GR)	178
	180
RECEPTACULO DE POTENCIA (CONJ) (SALIDA DE 24 VOLTIOS)	522
	526
RECEPTOR-SECADOR (GR) (ACONDICIONADOR DE AIRE)	1320
RECEPTOR-SECADOR (GR) (REFRIGERANTE)	1253
	1256
	1260
	1308
	1312
	1316
RECLINACION DE ASIENTO (GR)	1362
REFLECTOR (GR)	415
	416
	417
	418
REFLECTOR (GR)	419
REFLECTOR (GR) (24 VOLTIOS)(SUSPENDIDA)	426
	427
	428
	429
REFLECTOR (GR) (24 VOLTIOS)(VERTICAL)	431
	432
REGULADOR DE TEMPERATURA DEL AGUA	166
REGULADOR DE TEMPERATURA DEL AGUA (92 GR C)	158
	162
REJILLA ACAMPANADA (CONJ)	120
REJILLA DE SUCCIÓN	536
	602
	608
	614
	618
	622
	646
	1136
REJILLA DEL TANQUE DE COMBUSTIBLE	250
	262
REJILLA MAGNÉTICA (GR)	1136
REJILLA PROTECTORA (GR)	1366
RESORTE	494
	495
RESORTE (ESCOBILLAS DEL MOTOR DE ARRANQUE)	484
	485
RESORTE TENSOR Y AJUSTADOR DE LA CADENA (GR)	824
	826
	828
	830
	832
	834
RESORTE TENSOR Y AJUSTADOR DE LA CADENA (GR)	822
RESORTE TENSOR Y AJUSTADOR DE LA CADENA (GR) (LADO DERECHO)	838
RESPIRADERO	614
	618
	622
	796
	1070
	1102

INDICE

Nombre	Página
RESPIRADERO (ALIVIO DE PRESIÓN)	603
	609
RESPIRADERO (CONJ)	26
	27
RETÉN (GR)	741
RETROCESO - ALARMA DE (GR)	352
	368
RETROVISOR (GR)	1326
	1327
REVESTIMIENTO DE LA CABINA (GR)	1307
RODILLO SUPERIOR DE CADENAS (CONFIG)	802
	803
	804
RODILLOS DE PESTAÑA DOBLE (GR)	805
	806
	807
	808
	809
RODILLOS DE PESTAÑA SIMPLE (GR)	810
	811
	812
	813
	814
RUEDA GUÍA DE CADENA (GR)	783
	784
	786
	788
	790
S	
SEGMENTO DE RUEDA MOTRIZ (GR)	639
	640
SELLO ANULAR	554
	556
	558
	562
	566
	570
	574
	578
	582
	586
	590
	594
	942
	943
	949
	956
	958
	1026
SELLO ANULAR (DI DE 110,49 MM)	308
SELLO DE CIGÜEÑAL (GR)	28
	30
	32
SELLO DE LABIO	158
	162
	166
SENSOR DE LA TEMPERATURA	152
	398
SENSOR DE LA TEMPERATURA (REFRIGERANTE)	154
SENSOR DE NIVEL DE COMBUSTIBLE (GR)	445
SENSOR DE PRESIÓN (GR)	202
	458
SENSOR DE PRESIÓN (GR)	453
SENSOR DE PRESIÓN (GR)	454
	455
	456
	457
	459
	460
	461
	462
SENSOR DE PRESIÓN (GR) (ACCIONAMIENTO DE INYECCIÓN)	50
SENSOR DE PRESIÓN (GR) (ACEITE DEL MOTOR)	284
SENSOR DE PRESIÓN (GR) (AIRE DE REFUERZO)	48
	50
	52
	54
SENSOR DE PRESIÓN (GR) (ATMOSFERICA)	238
	240
SENSOR DE PRESIÓN (GR) (ENTRADA DE TURBOCOMPRESOR)	203
SENSOR DE TEMPERATURA (GR)	158
	162
	166
SENSOR DE TEMPERATURA (GR)	468
	469
	470
SENSOR DE TEMPERATURA (GR) (ACEITE DEL TREN DE FUERZA)	346
	352
	360
	368
SENSOR DE TEMPERATURA (GR) (ACEITE HIDRÁULICO)	346
	354
	362
	370
SENSOR DE TEMPERATURA (GR) (COMBUSTIBLE)	264
SENSOR DE VELOCIDAD (GR)	345
	463
	464

INDICE

Nombre	Página
	465
	466
	467
SENSOR DE VELOCIDAD (GR)	443
SENSOR DE VELOCIDAD (GR)	92
	93
SENSOR DE VELOCIDAD (GR) (ODÓMETRO)	329
	336
	353
	361
SENSOR DE VELOCIDAD (GR) (VENTILADOR)	60
	72
SENSOR DEL SUPRESOR DEL CONTROL AUTOMÁTICO DEL RETARDADOR (GR)	444
SENSOR DEL SUPRESOR DEL CONTROL AUTOMÁTICO DEL RETARDADOR (GR)	134
SERVICIO DE TREN DE FUERZA (GR)	471
SILENCIADOR (GR)	206
SINCRONIZADOR	136
	138
	504
SISTEMA ROPS (CONJ)	1363
SOFTWARE DEL TREN DE FUERZA (GR)	396
SOFTWARE DEL TREN DE FUERZA (GR)	396
SOFTWARE DEL TREN DE FUERZA (GR)	471
SOFTWARE DEL TREN DE FUERZA (GR) (SOLAMENTE SOFTWARE)	396
SOLENOIDE (CONJ)	494
SOLENOIDE (CONJ) (MOTOR DE ARRANQUE)	484
SOLENOIDE DEL MOTOR DE ARRANQUE (CONJ)	488
SOLENOIDE DEL MOTOR DE ARRANQUE (CONJ)	472
SOPLADOR - VENTILADOR (GR)	150
	151
SOPORTE BASCULANTE (GR)	815
	817
	818
	820
SOPORTE DE CONTROL (GR)	876
SOPORTE DE LA HOJA TOPADORA	1064
SOPORTE DEL RESPALDO (GR)	1344
	1345
	1346
	1347
SOPORTE DEL RESPALDO (GR) (PARTE TRASERA)	1372
SUJETADOR DEL MANUAL DE LA MÁQUINA	397
SUSPENSIÓN - ASIENTO CON (GR)	1388
	1389
	1390
	1391
	1392
	1393
	1394
	1396
	1397
	1398
	1399
	1400
	1401
SUSPENSIÓN - ASIENTO CON (GR)	1376
	1377
SUSPENSIÓN - ASIENTO CON (GR) (LUMBAR)	1220
SUSPENSIÓN (GR)	816

T

TABLERO DE INSTRUMENTOS (GR)	1350
TABLERO DE INSTRUMENTOS (GR)	1352
TANQUE DE REFRIGERANTE (GR)	183
TANQUE DEL AGUA (GR)	184
	186
	188
	190
TANQUE DEL LAVAPARABRISAS (GR)	1420
	1421
TANQUE DEL LAVAPARABRISAS (GR)	1422
	1424
	1426
TANQUE Y FILTRO HIDRÁULICOS (GR)	998
TAPA	132
TAPA CON RESPIRADERO	1424
TAPA CONTRA EL POLVO	101
	126
	216
	218
	220
	222
	224
	226
	536
	550
	602
	603
	608
	609
	614
	618
	622
	651
	666
	668
	673
	877
	943

INDICE

Nombre	Página
	948
	956
	998
	1040
TAPA CONTRA EL POLVO (CONJ)	410
TAPA CONTRA LA LLUVIA (CONJ)	197
TAPA DE CONECTOR	506
	508
TAPA DE LA CAJA DE VOLANTE (GR)	23
TAPA DE LA CAJA DELANTERA (GR)	24
TAPA DE LLENADO (CONJ)	114
	602
	608
	614
	618
	622
TAPA DE NIVEL DE ACEITE (CONJ)	798
	800
TAPA DE PORTAFUSIBLES	506
	508
	512
	516
TAPA DE RADIADOR (CONJ)	183
TAPA DE RADIADOR (CONJ)	184
	188
TAPA DE RODILLO INFERIOR	766
TAPA DE RUEDA GUÍA (GR)	764
	765
TAPA DE VÁLVULA DEL ACONDICIONADOR DE AIRE (ROSCA 7/16 X 20)	1264
TAPA DEL BLOQUE MOTOR (GR)	21
	22
TAPA DEL MECANISMO DE VÁLVULAS (GR)	26
	27
TAPA DEL MUÑÓN (GR)	690
TAPA DEL RECEPTACULO	506
	508
	512
	516
TAPA DEL TANQUE DE COMBUSTIBLE (CONJ)	308
	313
TAPA DEL TAPÓN DEL TANQUE HIDRÁULICO (GR)	896
TAPA DEL TUBO DE LLENADO DE ACEITE (CONJ)	796
TAPA DEL TUBO DE LLENADO DEL TANQUE DE COMBUSTIBLE (CONJ)	216
	218
TAPA DEL TUBO DE LLENADO (HIDRÁULICO)	998
TAPAS PROTECTORAS DE EMBARQUE (GR)	1088
TAPÓN	74
	554
	556
	636
	646
	654
	656
	658
	678
	680
	682
TAPÓN (CONJ)	248
	250
TAPÓN (CONJ) (ROSCA 13/16-16)	246
TAPÓN DE CULATA (GR)	102
TAPÓN DE DRENAJE	90
	180
	768
	770
	772
	774
	776
	778
	780
	1070
TAPON DE DRENAJE DE ACEITE	96
TAPON DE TUBO	399
TAPÓN DEL BLOQUE MOTOR (GR)	100
	101
TAPÓN MAGNÉTICO	558
	562
	566
	570
	574
	578
	582
	586
	590
	594
TAPÓN (ROSCA 7/16-20)	101
TOPE (GR)	868
TORNILLERÍA DE MONT. DE LA BOMBA DE ACEITE (GR)	113
TORNILLERÍA-INTERRUPTOR GENERAL (CONFIG)	397
TRANSMISION (CONFIG)	648
TRANSMISIÓN PLANETARIA (GR)	630
TREN DE FUERZA-GRUPO ELECTRÓNICO	396
TREN DE RODAJE (CONFIG)	839
	840
	841
	842
	843
TREN DE RODAJE (CONFIG)	838
TUBERÍAS DE ACEITE DEL MOTOR (GR)	120
TUBERÍAS DE ACEITE DEL TREN DE FUERZA (GR)	602

INDICE

Nombre	Página
	608
	614
	618
	622
TUBERIAS DE ACEITE (GR)	124
	126
TUBERÍAS DE ACONDICIONADOR DE AIRE (GR)	1312
	1316
	1320
TUBERÍAS DE ACONDICIONADOR DE AIRE (GR)	1308
TUBERÍAS DE BOMBA (CONFIG)	990
TUBERÍAS DE BOMBA HIDRÁULICA DE INYECCIÓN (GR)	268
TUBERIAS DE CALEFACCION	1324
TUBERÍAS DE CILINDRO DE EXTRACTOR DE PASADORES	937
	938
	939
	940
TUBERÍAS DE COMBUSTIBLE (GR)	262
TUBERÍAS DE INCLINACIÓN	971
TUBERÍAS DE LA CALEFACCIÓN (GR)	1324
TUBERÍAS DEL AGUA (GR)	166
TUBERÍAS DEL AGUA (GR)	156
	158
	161
	162
TUBERÍAS DEL CILINDRO DE INCLINACIÓN (GR)	972
	974
	976
	978
	982
TUBERÍAS DEL DESGARRADOR (GR)	964
	968
	970
TUBERÍAS DEL FILTRO DE COMBUSTIBLE	264
TUBERÍAS DEL MALACATE (GR)	986
	988
TUBO DE LLENADO DE ACEITE (GR)	114
TURBOCOMPRESOR - TUBERÍAS DE ACEITE DEL (GR)	130
TURBOCOMPRESOR (GR)	212
	213
	214
	215
V	
VALVULA	248
	250
	673
VÁLVULA	1032
	1036
VÁLVULA - ESFERA (CIERRE MANUAL)	248
	250
	262
VÁLVULA (COMPROBACIÓN DE LA CARGA)	1026
VÁLVULA (CONJ)	144
	184
	186
	220
	222
	224
	226
	1211
	1324
VÁLVULA (CONJ) (AGUA)	1294
VÁLVULA (CONJ) (ARRANQUE CON ETER)(24 VOLTIOS)	474
VÁLVULA (CONJ) (DRENAJE DE TANQUE DE AGUA)	188
	190
VÁLVULA (CONJ) (RESPIRADO DE AIRE)	998
VÁLVULA DE AGUA (CONJ)	1202
	1206
	1286
	1290
VALVULA DE ALIVIO DE DISCO	1027
VÁLVULA DE ALIVIO (GR)	614
	618
	622
	666
	668
	1043
VÁLVULA DE CAÍDA RÁPIDA (GR)	1041
	1042
VÁLVULA DE CONTROL (CONJ)	668
VÁLVULA DE CONTROL (CONJ)	1022
VÁLVULA DE CONTROL (CONJ)	666
VALVULA DE CONTROL DE INCLINACION (GR)	1058
	1059
VÁLVULA DE CONTROL DE LA TRANSMISIÓN (GR)	673
	674
VÁLVULA DE CONTROL DEL MALACATE (GR)	1148
VÁLVULA DE CONTROL (GR)	652
	654
	878
	1024
	1026
	1031
	1032
	1034
	1036
VÁLVULA DE CONTROL (GR)	656

INDICE

Nombre	Página
	658
VÁLVULA DE CONTROL Y MONTAJE (GR)	1016
	1017
VÁLVULA DE CORTE	167
VALVULA DE DERIVACION	998
VÁLVULA DE DERIVACIÓN (GR) (SOLAMENTE CLIMA DE TIEMPO DE FRIO)	1036
VÁLVULA DE DIRECCIÓN Y MONTAJE (GR)	877
VÁLVULA DE DRENAJE	678
	680
	682
	943
	948
	959
VALVULA DE DRENAJE (CONJ)	180
VÁLVULA DE ESCAPE	46
VALVULA DE GRASA (CONJ) (LLENADO)	822
	830
	832
VÁLVULA DE LANZADERA (GR)	1046
VÁLVULA DE MODULACIÓN (GR)	660
VÁLVULA DE MUESTREO (GR)	550
	603
	609
	614
	618
	622
VÁLVULA DE MUESTREO (GR)	998
VÁLVULA DE RETENCIÓN (CONJ)	1146
VÁLVULA DE RETENCIÓN (CONJ) (SISTEMA DE LIMPIA/LAVAPARABRISAS)	1421
	1422
	1426
VÁLVULA DE RETENCIÓN (GR)	1023
VÁLVULA DE SOLENOIDE (GR)	294
	671
	672
	880
	1047
	1051
	1058
VÁLVULA DE SOLENOIDE (GR)	881
	1048
	1049
	1050
	1052
	1053
	1054
	1056
VÁLVULA DE SOLENOIDE (GR) (CONTROL DE PRESION)	296
	297
	298
VÁLVULA DE SOLENOIDE (GR) (FUNCIÓN INCLINACIÓN/PUNTA)	1059
VÁLVULA PILOTO (GR)	1038
	1039
VÁLVULA PILOTO (GR) (INCLINAR)	1039
VALVULA PILOTO Y MONTAJE (GR)	650
	651
VÁLVULA SELECTORA (GR)	654
	656
	658
	670
	1018
	1146
VÁLVULA SELECTORA Y DE CONTROL DE PRESIÓN (GR)	1044
VÁLVULA (VACIADO)	822
	824
	826
	828
	830
	832
	834
VÁLVULA Y CILINDRO (GR)	1000
	1002
	1004
	1006
	1008
	1010
	1012
	1014
	1015
VÁLVULA Y CILINDRO (GR) (LADO DERECHO)	1065
	1066
VÁLVULA Y CILINDRO (GR) (LADO IZQUIERDO)	1065
	1066
VALVULA Y MONTAJE DE MANDO DE VENTILADOR (GR))	142
VARILLAJE DE LOS IMPLEMENTOS	1108
	1110
	1112
VENTANA CORREDIZA (CONJ)	1435
VENTANA CORREDIZA (CONJ)	1435
VENTANA CORREDIZA (CONJ) (LADO DERECHO)	1234
VENTANA CORREDIZA (CONJ) (LADO IZQUIERDO)	1234
VENTANA DE LA CABINA (GR)	1450
VENTANA DE LA CABINA (GR)	1444
	1446
	1447
VENTANA DE LA CABINA (GR)	1443
VENTANA DE LA CABINA (GR)	1436
	1437
	1438
	1439

INDICE

Nombre	Página
	1440
	1441
	1442
	1448
	1449
VENTANA DE LA CABINA (GR) (DERECHA)(DESLIZANTE)	1435
VENTANA DE LA CABINA (GR) (IZQUIERDA)(DESLIZANTE)	1435
VENTANA DE LA CABINA (GR) (LADO DERECHO)	1436
	1442
VENTANA DE LA CABINA (GR) (LADO IZQUIERDO)	1437
VENTANA DE LA CABINA (GR) (TRASERA)(DESLIZANTE)	1234
VENTANA DE LA PUERTA - LADO DERECHO (CONJ) (ÁRTICO)	1230
	1232
VENTANA DE LA PUERTA - LADO IZQUIERDO (CONJ) (ÁRTICO)	1230
	1232
VENTANA DELANTERA (CONJ) (ÁRTICO)	1230
	1232
VENTANA IZQUIERDA (CONJ) (ÁRTICO)	1230
	1232
VENTANA LATERAL (CONJ) (ÁRTICO)	1230
	1232
VENTILADOR, CONFIGURACIÓN	147
VENTILADOR DE ALTERNADOR	322
VENTILADOR DESCONGELADOR (GR)	1274
VENTILADOR VARIABLE (CONFIG)	148
	149
VIDRIO (AHUMADO)	1234
	1436
	1437
	1447
	1448
VIDRIO (AHUMADO)(VERDE)	1449
	1450
VIDRIO (CONJ) (REFLECTOR)	415
	416
	418
	419
VIDRIO DE LOS FAROLES (CONJ)	417
VIDRIO-DESLIZANTE-DERECHO (AHUMADO)	1446
VIDRIO-DESLIZANTE (IZQUIERDO) (AHUMADO)	1444
VIDRIO-FIJO-DERECHO (AHUMADO)	1442
VIDRIO-FIJO-LADO IZQUIERDO (AHUMADO)	1443
VOLANTE - CAJA DE (GR)	90
VOLANTE (GR)	78

Y

Nombre	Página
YUGO (GR)	111
	112

ÍNDICE

Designação	Página
A	
ACOPLAMENTO DA BOMBA	547
ACUMULADOR DO AR CONDICIONADO	1260
	1320
ADAPTADOR - ABASTECIMENTO RÁPIDO DE COMBUSTÍVEL	216
	218
	220
	222
	224
	226
AJUSTADOR DE CORREIAS	12
	14
	16
	18
AJUSTADOR DE ESTEIRAS E MOLA TENSORA	822
	824
	826
	828
	830
	832
	834
AJUSTADOR DE ESTEIRAS E MOLA TENSORA (LADO DIREITO)	838
AJUSTADOR DO ASSENTO	1196
	1197
	1198
AJUSTADOR DO CONTROLE DA DIREÇÃO E TRANSMISSÃO	844
ALARME	315
ALARME DE MARCHA À RÉ	352
	368
ALTERNADOR DE CORRENTE	316
	318
	320
	322
	324
	326
AMORTECEDOR	56
AQUECEDOR	398
	1278
	1280
	1282
AQUECEDOR DA ÁGUA DO MOTOR	402
	410
	411
	412
AQUECEDOR DA CABINE	1280
	1282
	1286
	1290
	1294
AQUECEDOR DO COMBUSTÍVEL	406
	408
AQUECEDOR DO LÍQUIDO ARREFECEDOR	398
	402
ARMAÇÃO - TENSOR TELESCÓPICO	767
ARMAÇÃO DO RIPER	1090
	1092
	1094
	1096
	1098
ARMAÇÃO TELESCÓPICA DA MOLA TENSORA	768
	770
	772
	774
	776
	778
	780
ARRANJO ÁRTICO	1
ARREFECEDOR - ÓLEO DO MOTOR	145
ARREFECEDOR DE ÓLEO DA TRANSMISSÃO	546
ARREFECEDOR DO ÓLEO HIDRÁULICO	893
	894
ARTICULAÇÃO DO ACESSÓRIO	1108
	1110
	1112
ASSENTO	1367
	1372
	1374
	1376
	1377
	1378
	1379
	1380
	1381
	1382
	1384
	1386
	1387
ASSENTO - FUNDO	1348
ASSENTO - FUNDO (INFERIOR)	1372
ASSENTO COM SUSPENSÃO	1376
	1377
	1388
	1389
	1390
	1391
	1392
	1393
	1394
	1396
	1397
	1398
	1399
	1400

ÍNDICE

Designação	Página
	1401
ASSENTO COM SUSPENSÃO (ENCOSTO)	1220
ASSENTO (ENCOSTO)	1379
	1381
	1388
	1389
	1390
ASSENTO (ENCOSTO) (TECIDO)	1380
ASSENTO (VINIL - LOMBAR)	1391
	1392
	1393
ATERRO SANITÁRIO	4
AUXILIAR DE PARTIDA A ÉTER	474

B

Designação	Página
BALANCIM	105
BARRA DE SUSPENSÃO	746
	748
	750
	751
	752
	754
	756
	757
	758
	759
	760
	761
BARRA DE TRAÇÃO	692
BARRA LIMPADORA DOS ROLOS	742
	744
	762
	763
BARRA LIMPADORA DOS ROLOS (DIREITO)	744
BARRA LIMPADORA DOS ROLOS (ESQUERDO)	744
BATERIA E CABOS / FIOS ELÉTRICOS	360
	368
BATERIA E CABOS / FIOS ELÉTRICOS	328
	336
	344
	352
BATERIA (12 V)	328
	336
	344
	354
	362
	370
	476
	480
BATERIA (12 VOLT/SECO)	2
BEIRA - PONTA CORTANTE	1175
	1176
	1177
	1178
	1179
	1180
	1181
	1182
BLINDAGEM DO COLETOR	210
BLOCO DE EMPUXO	1060
	1061
	1062
	1063
BLOCO DE JUNÇÃO	413
BLOCO DO MOTOR	34
	36
	38
	40
BOCAL DE ENCHIMENTO DE ÓLEO DO MOTOR	114
BOMBA DE ÁGUA	169
	170
	171
	172
	174
	176
BOMBA DE ENGRENAGENS	634
	636
	637
	638
	991
	992
BOMBA DE ESCORVA DO COMBUSTÍVEL	291
BOMBA DE ESCORVA DO COMBUSTÍVEL E DO FILTRO PRIMÁRIO	292
BOMBA DE INJEÇÃO DO COMBUSTÍVEL	286
	287
	288
	289
	290
BOMBA DE LÍQUIDO ARREFECEDOR	398
BOMBA DE ÓLEO - MOTOR	140
BOMBA DE PALHETAS	994
	996
BOMBA DE TRANSFERÊNCIA DO COMBUSTÍVEL	294
	296
	297
	298
	300
	302
	304
BOMBA E TUBOS	990
BOMBA HIDRÁULICA - UNIDADE INJETORA	294
	296
	297
	298
	300

ÍNDICE

Designação	Página
	302
	304
	306
BOMBA HIDRÁULICA E MONTAGEM - UNIDADE INJETORA	270
	272
	274
	276
	278
	280
	282
	284
BOTÃO - CHICOTE	522
	527
BOTÃO - LOMBAR	1347
BOTÃO (AJUSTE DO BRAÇO DO ASSENTO)	844
BRAÇO DE EMPUXO	1130
BRAÇO DE EMPUXO - DIREITO	1132
BRAÇO DE EMPUXO - ESQUERDO	1131
BRAÇO DO ASSENTO	1213
	1214
BUJÃO - ANEL O	74
BUJÃO - ANEL O (7/16-20 THD)	101
BUJÃO - CABEÇA DO CILINDRO	102
BUJÃO - CANO/TUBO	399
BUJÃO - DRENAGEM DO ÓLEO	96
BUJÃO DO BLOCO DO CILINDRO	100
	101
BUJÃO DO DRENO	90
	180
	768
	770
	772
	774
	776
	778
	780
	1070
BUJÃO MAGNÉTICO	558
	562
	566
	570
	574
	578
	582
	586
	590
	594
BUZINA (24 VOLTS - ALTA TONALIDADE)	328
	336
	344
	352
	360
	368
BUZINA (24 VOLTS)(TONALIDADE BAIXA)	328
	336
	344
	352
	360
	368

C

Designação	Página
CABEÇOTE DO MOTOR	41
	42
	43
	44
	45
	46
	48
	50
	52
	54
CABINE	1216
	1218
	1220
	1221
	1222
	1224
	1225
	1226
	1228
	1234
	1237
CABINE PARA USO EM TEMPO FRIO	1230
	1232
CABO - CONTROLE	1280
	1282
CABOS/FIOS ELÉTRICOS - INJETOR	530
CABOS/FIOS ELÉTRICOS - MOTOR	520
CABOS/FIOS ELÉTRICOS - PLATAFORMA	522
	526
CABOS/FIOS ELÉTRICOS DO CONSOLE	506
	508
	512
	516
CADEADO	218
	248
	250
	262
	308
	312
	477
	481
	694
	700
	704
	708
	736
	896

ÍNDICE

Designação	Página
CAIXA - GUINCHO	1070
CAIXA - SUSPENSÃO DO ASSENTO	1298
	1302
CAIXA DIANTEIRA	92
	93
CAIXA DO VOLANTE DO MOTOR	90
CAIXA E CHASSI	678
	680
	682
CANTO DE LÂMINA	1149
CAPÔ E PROTETOR	736
CARCAÇA DAS ENGRENAGENS PLANETÁRIAS E COMPONENTES	536
CÁRTER DO ÓLEO DO MOTOR	96
CARTUCHO - BOMBA DE PALHETAS	882
	883
CARTUCHO - FILTRO	310
CARTUCHO DO TURBOALIMENTADOR	212
	215
CHAPA DO PISO	1276
CHAVE	308
	312
CHAVE (DESCONECTAR A BATERIA)	499
CHAVE GERAL	499
CHAVE GERAL (BATERIA)	329
	338
	345
	353
	361
	369
CHICOTE (SENSOR DE PRESSÃO)	457
CHICOTE (TOMADA) (SENSOR DE PRESSÃO)	457
CILINDRO - INCLINAÇÃO DA LÂMINA	902
	904
	906
CILINDRO - INCLINAÇÃO DA LÂMINA (DIREITO)	897
CILINDRO - INCLINAÇÃO DA LÂMINA (ESQUERDO)	897
CILINDRO - LEVANTAMENTO DA LÂMINA	898
	900
	1000
	1002
	1006
	1010
	1012
CILINDRO DE INCLINAÇÃO DO RÍPER	926
	928
	930
CILINDRO DE INCLINAÇÃO DUAL	908
	910
CILINDRO DE LEVANTAMENTO DO RIPER	912
	914
	916
	918
	920
	922
CILINDRO DE LEVANTAMENTO DO RIPER (DIREITO)	1133
	1134
	1135
CILINDRO DE LEVANTAMENTO DO RIPER (ESQUERDO)	1133
	1134
	1135
CILINDRO DO SACADOR DE PINO DO RIPER	924
CILINDRO DUPLO DE INCLINAÇÃO	897
CILINDRO DUPLO DE INCLINAÇÃO E TUBOS	897
CILINDRO (ÉTER)	474
CINTO DE SEGURANÇA	1368
	1369
	1370
	1386
	1387
	1390
CINTO DE SEGURANÇA (RETRÁTIL)	1379
	1380
	1381
	1388
	1389
	1391
	1392
	1393
CINZEIRO	1280
	1282
CLIMA FRIO - ARRANJO	1
COBERTURA - PÁRA-LAMA	700
	702
	704
COBERTURA DO MOTOR	694
	698
COLETOR DE ESCAPE	204
	205
COLETOR E VÁLVULA	626
	627
	874
	875
COLMÉIA - ARREFECEDOR DE ÓLEO	146
	163
	167
COLMÉIA - ARREFECEDOR DE ÓLEO (MOTOR)	145
	163
	167
COMANDO DA BOMBA HIDRÁULICA DO INJETOR	234
	236

ÍNDICE

Designação	Página
	237
	238
	239
	240
	242
	244
COMANDO DO GUINCHO	1174
COMANDO DO VENTILADOR	57
	58
	59
	60
	61
	62
	63
	64
	65
	66
	67
	68
	70
	72
	73
	74
	75
	76
COMANDO DO VENTILADOR (ÁRTICO)	1
COMANDO FINAL	558
	562
	566
	570
	574
	578
	582
	586
	590
	594
COMPRESSOR DE REFRIGERANTE	1238
	1239
	1240
	1241
	1242
	1244
	1246
	1248
CONDENSADOR DE REFRIGERANTE	1264
	1266
	1268
CONDENSADOR DO REFRIGERANTE E MONTAGEM	1250
	1252
	1256
	1260
CONDICIONADOR DE AR	1200
	1201
	1202
	1206
	1210
CONDICIONADOR DO LÍQUIDO ARREFECEDOR	143
	144
CONEXÃO	746
CONEXÃO - AR CONDICIONADO	1260
	1320
CONJUNTO DESLIZADOR	1438
	1449
CONTRAPESO	686
	688
	689
CONTRAPESO TRASEIRO E BARRA	684
CONTROLE - NÃO PROGRAMADO	377
	392
	393
	394
	471
CONTROLE - REDUTOR DE LUMINOSIDADE DO SIST. DE MONITORIZAÇÃO	1269
CONTROLE DE ÁGUA	1270
CONTROLE DE DIREÇÃO E TRANSMISSÃO	860
	862
	864
	866
CONTROLE DE INCLINAÇÃO DUPLA	884
CONTROLE DE MONITORIZAÇÃO	1350
CONTROLE DO DESACELERADOR	228
	230
	232
CONTROLE DO FREIO	852
	854
	856
CONTROLE DO FREIO DE ESTACIONAMENTO	858
CONTROLE DO GUINCHO	1086
CONTROLE DO GUINCHO DE REBOQUE	1082
CONTROLE DO PAINEL MONITOR (SISTEMA DE MONITORIZAÇÃO CATERPILLAR)	1352
CONTROLE DO TREM DE FORÇA	391
CONTROLE E MONTAGEM - TRANSMISSÃO	538
CONTROLE ELETRÔNICO	381
	382
	383
	860
CONTROLE ELETRÔNICO - MOTOR	387
	388
	389
	390
CONTROLE ELETRÔNICO DO MOTOR - CLASSIFICAÇÃO	384
	385
	386
CONTROLE ELETRÔNICO E MONTAGEM	376

ÍNDICE

Designação	Página
	377
	378
CONTROLE ELETRÔNICO E MONTAGEM - MOTOR	379
	380
CONTROLE ELETRÔNICO (LUZ DO PAINEL DE INSTRUMENTOS)	1350
	1352
CONTROLE HIDRÁULICO	886
	888
	890
	892
CONTROLE HIDRÁULICO DA TRANSMISSÃO	540
	542
	544
CONVERSOR DE TORQUE	642
	644
	646
CONVERSOR ELÉTRICO	395
CORDÃO PARA LITERATURA	397
COROA E ENGRENAGEM DE TRANFERÊNCIA	598
CORREIA EM V	109
	152
	154
	318
	324
	326
	1242
	1244
	1248
CRONÔMETRO-ESPERA DE LIGAÇÃÕ (24 V)	1261
	1320
CRUZETA E MANCAL	649

D

Designação	Página
DECALQUE	858
	1465
	1466
DECALQUE - ADVERTÊNCIA	768
	770
	772
	774
	776
	778
	780
DECALQUE - AQUECEDOR	398
	402
DECALQUE - AVISO	2
	1278
	1336
DECALQUE - AVISO (BOMBA DE PRÉ-LUBRIFICAÇÃO)	134
	136
	138
DECALQUE - AVISO (RÁDIO)	1305
DECALQUE - AVISO (VÁLVULA DO VENTILADOR)	2
DECALQUE - CAT	1194
	1195
DECALQUE - FUSÍVEL	513
	517
DECALQUE - IDENTIFICAÇÃO	1350
DECALQUE - IDENTIFICAÇÃO (FUSÍVEL)	154
	506
	508
DECALQUE - IDENTIFICAÇÃO (NO. DE SEQÜÊNCIA E GRUPO)	1202
	1206
	1210
	1264
	1266
	1286
	1290
	1294
DECALQUE - INSTRUÇÃO	886
	1456
	1460
DECALQUE - INSTRUÇÃO (AJUSTE DO ASSENTO)	1408
	1414
	1418
DECALQUE - INSTRUÇÃO (CONTROLE DE RÍPER)	1108
DECALQUE - INSTRUÇÃO (CONTROLE DO BULDÔZER)	1468
DECALQUE - INSTRUÇÃO (ENTRADA E SAÍDA DE ÁGUA)	1202
	1206
	1210
	1286
	1290
	1294
DECALQUE - INSTRUÇÃO (INTERUPTOR DO SACA-PINO DO RIPER)	888
	890
DECALQUE - MANUSEADOR DE DETRITOS	1465
DECALQUE - PAINEL	1280
	1282
	1350
	1352
DECALQUE - SEM DEGRAU	398
	402
DECALQUE (ALMOFADA DO ASSENTO - IDENTIFICAÇÃO)	1346
	1347

ÍNDICE

Designação	Página
DECALQUE (INSTRUÇÃO) (CONTROLE DA LÂMINA)	1110
DECALQUE MONITOR	1350 1352
DECALQUE-NÍVEL DE SOM PARA O OPERADOR	3 1402
DENTE DO RÍPER	1191 1192 1193
DESCONGELADOR	1274
DESLIZADOR DO VIDRO - LADO DIREITO (MATIZADO)	1446
DISJUNTOR AUTOMÁTICO DE CIRCUITO (10 A)	506 512 516
DISJUNTOR AUTOMÁTICO DE CIRCUITO (10 A) (AUXILIAR)	509
DISJUNTOR AUTOMÁTICO DE CIRCUITO (10 A) (CHAVE)	508
DISJUNTOR AUTOMÁTICO DE CIRCUITO (10 A) (PARTIDA DO MOTOR)	509 512 516
DISJUNTOR AUTOMÁTICO DE CIRCUITO (105 A)	506
DISJUNTOR AUTOMÁTICO DE CIRCUITO (105 A) (ALTERNADOR)	508 512 516
DISJUNTOR AUTOMÁTICO DE CIRCUITO (105 A) (PRINCIPAL)	508 512 516
DISJUNTOR AUTOMÁTICO DE CIRCUITO (15 A)	152 506 512 516 1252 1257 1260
DISJUNTOR AUTOMÁTICO DE CIRCUITO (15 A) (FAROL DIANTEIRO)	508 512 516
DISJUNTOR AUTOMÁTICO DE CIRCUITO (15 A) (MOTOR)	508 512 516
DISJUNTOR AUTOMÁTICO DE CIRCUITO (15 A) (MOTOR DO VENTILADOR)	512 516
DISJUNTOR AUTOMÁTICO DE CIRCUITO (15 A) (TOMADA)	509 512 516
DISJUNTOR AUTOMÁTICO DE CIRCUITO (15 A) (VENTILADOR)	509
DRENO - ECOLOGIA	548

E

Designação	Página
EIXO-COMANDO DE VÁLVULA	20
EIXO DA TRANSMISSÃO	641
EIXO PIVÔ - LUBRIFICAÇÃO	798 800
EJETOR DE POEIRA	197
ELEMENTO - AQUECEDOR DE ÁGUA DA CAMISA	411 412
ELEMENTO - AQUECEDOR DE ÁGUA DA CAMISA (120 VOLTS/1500 WATTS)	410
ELEMENTO - CONDICIONADOR DO LÍQUIDO ARREFECEDOR	143
ELEMENTO - FILTRANTE	202 203 246 252 292 1086
ELEMENTO - FILTRANTE (FLUIDO RESISTENTE A FOGO)	998
ELEMENTO - PRIMÁRIO	196
ELEMENTO - SECUNDÁRIO	196
ELEMENTO FILTRANTE - ÓLEO	552 554 556 614 618 622
ELEMENTO FILTRANTE - ÓLEO (FLUXO HIDRÁULICO/REVERSO) (DESCARTÁVEL)	998
ELIMINAÇÃO DE VAPORES DO CÁRTER	116
ELO DA ESTEIRA	792 793 794
ELO ESTABILIZADOR	1106 1107
EMBREAGEM DE DIREÇÃO E FREIOS	848 850
EMBREAGEM E ENGRENAGEM	1074
EMISSOR - POSIÇÃO	446 447 448 449 450

ÍNDICE

Designação	Página
	451
	452
EMISSOR - POSIÇÃO (DESACELERADOR)	228
EMISSOR - POSIÇÃO (DIREÇÃO)	862
	864
EMISSOR - POSIÇÃO (FREIO)	852
	854
EMISSOR - POSIÇÃO (POSIÇÃO DA DIREÇÃO)	860
ENGRENAGEM DO ACESSÓRIO	1100
ENGRENAGENS DE COMANDO TRASEIRO	82
	86
ENGRENAGENS DE DISTRIBUIÇÃO	80
ENGRENAGENS PLANETÁRIAS - TRANSMISSÃO	630
ESCOVA	494
ESCOVA (MOTOR DE PARTIDA)	484
ESPELHO RETROVISOR	1326
	1327
ESTEIRA	836
	837
	838
ESTRUTURA ROPS	1363
	1364
	1365
EXTENSÃO - ENCOSTO	1272
	1273
	1386
	1387

F

Designação	Página
FAROL DIANTEIRO (24 V) (FAROL)	418
	419
FILTRO	310
FILTRO - AR (CABINE)	1280
	1282
FILTRO - COMBUSTÍVEL	248
	250
	264
	308
FILTRO - DERIVAÇÃO	1069
FILTRO - ESPUMA	330
	337
	345
	354
	362
	370
FILTRO - MAGNÉTICO	1136
FILTRO - ÓLEO	550
	552
	554
	556
FILTRO - ÓLEO DO MOTOR	550
FILTRO - SEPARADOR DE ÁGUA E COMBUSTÍVEL	246
	292
FILTRO - SEPARADOR DE ÁGUA E COMBUSTÍVEL (PRIMÁRIO)	252
FILTRO (BOMBA D'ÁGUA)	172
	174
	176
FILTRO (BOMBA HIDRÁULICA DA UNIDADE INJETORA)	234
	242
	244
FILTRO DE COMBUSTÍVEL E SEPARADOR DE ÁGUA	252
	253
	254
FILTRO E TUBOS - COMBUSTÍVEL	246
FILTRO (SEPARADOR DE ÁGUA E COMBUSTÍVEL)	253
FIXADORES - BOMBA DE ÓLEO DO MOTOR	113
FIXADORES - CHAVE GERAL	397
FUNDO - ENCOSTO	1344
	1345
	1346
	1347
FUNDO - ENCOSTO (PARTE TRASEIRA)	1372
FUSÍVEL	398
FUSÍVEL (10 A)	506
	508
	513
	517
FUSÍVEL (1/4 AMP)	152
	154
FUSÍVEL (15 A)	152
	154
	506
	508
	513
	517
FUSÍVEL (20 A)	506
	508
	512
	516

G

Designação	Página
GARFO	111
	112
GR. DE CONVERSÃO	1271
GR. DE SERVICO - TREM DE FORÇA	471
GR. DE VÁLVULAS DE CONTROLE	1018
GRADE DO RADIADOR CONTRA EROSÃO	713
GRAXEIRA	18
	70
	76

ÍNDICE

Designação	Página
	746
	748
	752
	757
	786
	824
	826
	828
	834
	902
	904
	906
	908
	910
	912
	914
	916
	918
	920
	930
	1089
	1090
	1092
	1094
	1096
	1098
	1103
	1104
	1114
GRAXEIRA (ROSCA 1/8-27 POL)	582
	754
	759
	760
	761
	922
	1064
GRUPO DE CONVERSÃO	2
	3
GRUPO DE VÁLVULAS DE CONTROLE - TRIPLO	1020
GUIA - VEDADOR	734
	735
GUIA DOS ROLETES	1101

I

Designação	Página
ILUMINAÇÃO	426
ILUMINAÇÃO - AUXILIAR	427
	428
ILUMINAÇÃO - DIANTEIRA	434
	435
	436
	437
	438
ILUMINAÇÃO - RÍPER	442
ILUMINAÇÃO - TRASEIRA	439
	440
ILUMINAÇÃO TRASEIRA	424
	425
INDICADOR - NÍVEL DO ÓLEO (VARETA)	118
INDICADOR E TAMPA	310
INJETOR DE COMBUSTÍVEL	255
	256
	257
	258
	259
	286
INSERTO - SEDE DE VÁLVULA (ADMISSÃO)	42
INSERTO - SEDE DE VÁLVULA (ESCAPE)	42
INSTALACÃO DO GUINCHO	1102
INSTALAÇÃO DO RÁDIO	1305
INTERRUPTOR	504
	527
INTERRUPTOR - ALAVANCA	502
	1110
INTERRUPTOR - BALANCIM (AR CONDICIONADO LIGAR/DESLIGAR)	1280
	1282
INTERRUPTOR - BALANCIM (AUXILIAR)	522
	526
INTERRUPTOR - BALANCIM (AUXILIAR DE PARTIDA)	522
	526
INTERRUPTOR - BALANCIM (CONTROLE DO VENTILADOR)	1274
INTERRUPTOR - BALANCIM (FREIO DE ESTACIONAMENTO)	858
INTERRUPTOR - BALANCIM (LUZ LATERAL)	523
	526
INTERRUPTOR - BALANCIM (OPERADOR)	523
	526
INTERRUPTOR - BALANCIM (TRAVAMENTO)	886
INTERRUPTOR - BALANCIM (TRAVAMENTO)(SACA-PINO DO RIPER)	888
	890
INTERRUPTOR - BOTÃO (MUDANÇA MARCHAS ACIMA)	876
INTERRUPTOR - BOTÃO (REDUÇÃO DE MARCHA)	876
INTERRUPTOR - CONTROLE DO AQUECEDOR	398
	402
INTERRUPTOR - CRONÔMETRO	504
INTERRUPTOR - CRONÔMETRO (PRÉ-LUBRIFICAÇÃO)	136
INTERRUPTOR - FLUXO	7
	9
	11
	500
	501

ÍNDICE

Designação	Página
INTERRUPTOR - LIMITADOR (FREIO)	852 854 856
INTERRUPTOR - LIMITADOR (MARCHA À RÉ)	860 862 864
INTERRUPTOR - MAGNÉTICO	477 506 512 516
INTERRUPTOR - MAGNÉTICO (CHAVE GERAL)	480
INTERRUPTOR - MAGNÉTICO (PRÉ-LUBRIFICAÇÃO)	138
INTERRUPTOR - MAGNÉTICO (RELÉ DE PARTIDA)	508
INTERRUPTOR - MAGNÉTICO (RELÉ PRINCIPAL)	506 508 512 516
INTERRUPTOR - PARTIDA	503
INTERRUPTOR - PRESSÃO	1261 1320
INTERRUPTOR - PRESSÃO (ALTO/BAIXO)	1253 1256 1260 1308 1312 1316 1320
INTERRUPTOR - PRESSÃO (ÓLEO)	134 136 138
INTERRUPTOR - ROTATIVO (LIMPADOR / LAVADOR)	1456 1460
INTERRUPTOR - ROTATIVO (VELOCIDADE DO VENTILADOR)	1280 1282
INTERRUPTOR - TEMPERATURA (DERIVAÇÃO DO FILTRO)	329 337 345 353 361 369
INTERRUPTOR - TERMOSTATO	1202 1206 1210
INTERRUPTOR (BALANCIM) (CONSOLE - LEVANTAR/ABAIXAR)	844
INTERRUPTOR (BUZINA)	522
INTERRUPTOR (CONTROLE DE INCLINAÇÃO ÚNICO - DUPLO)	502
INTERRUPTOR (CONTROLE DE TOMBAMENTO)	502
INTERRUPTOR DE DERIVAÇÃO	329 337 497 498
INTERRUPTOR DE DERIVAÇÃO (FILTRO DO TREM DE FORÇA)	345
INTERRUPTOR DE DERIVAÇÃO (PRESSÃO DO FILTRO DO TREM DE FORÇA)	353
INTERRUPTOR (LUZ DIANTEIRA)	523 527
INTERRUPTOR (LUZ TRASEIRA)	522 526
INTERRUPTOR (SINCRONIZADOR DE PRÉ-LUBRIFICAÇÃO)	134
INTERRUPTOR (24 VOLT)(ILUMINADO) (ACELERADOR)	522 526

J

Designação	Página
JANELA DA CABINE	1436 1437 1438 1439 1440 1441 1442 1443 1444 1446 1447 1448 1449 1450
JANELA DA CABINE (DIREITO)	1436 1442
JANELA DA CABINE (ESQUERDO)	1437
JANELA DA CABINE (LADO DIREITO - DESLIZANTE)	1435
JANELA DA CABINE (LADO ESQUERDO - DESLIZANTE)	1435
JANELA DA CABINE (TRASEIRO - DESLIZANTE)	1234
JANELA DA PORTA DIREITA (ÁRTICO)	1230 1232
JANELA DA PORTA ESQUERDA (ÁRTICO)	1230 1232
JANELA DESLIZANTE	1435
JANELA DESLIZANTE (DIREITO)	1234
JANELA DESLIZANTE (ESQUERDO)	1234
JANELA DIANTEIRA (ÁRTICO)	1230

ÍNDICE

Designação	Página
	1232
JANELA ESQUERDA (ÁRTICO)	1230
	1232
JANELA LATERAL (ÁRTICO)	1230
	1232
JOGO - COMPENSADOR (BOMBA HIDRÁULICA DA UNIDADE INJETORA)	300
	302
	306
JOGO - PALHETA DO VENTILHADOR	152
JOGO DE ACONDICIONAMENTO - BOMBA DE ÁGUA	172
	174
JOGO DE ACONDICIONAMENTO DA BOMBA D'ÁGUA (ÁGUA)	176
JOGO DE AJUSTADOR (FUNDO DO ASSENTO)	1348
JOGO DE ALMOFADA DO ASSENTO (ASSENTO DA SUSPENSÃO)	1374
JOGO DE ALMOFADA DO ASSENTO (VINIL)	1372
JOGO DE ALMOFADA (ENCOSTO DE VINIL)	1273
JOGO DE ALMOFADA (EXTENSÃO DO ENCOSTO DO ASSENTO)	1272
JOGO DE BLOCO DESLIZADOR	1388
	1389
	1390
	1391
	1392
	1393
	1397
	1398
	1399
	1400
	1401
JOGO DE BOMBA INJETORA DE COMBUSTÍVEL (RECONDICIONAMENTO)(BOMBA HIDRÁULICA DA UNIDADE INJETORA)	300
	302
JOGO DE BOMBA (RECONDICIONAMENTO)(BOMBA HIDRÁULICA DA UNIDADE INJETORA)	306
JOGO DE BOTÃO DE SUSPENSÃO	1298
	1302
JOGO DE BUJÃO (BOMBA HIDRÁULICA DA UNIDADE INJETORA)	300
	302
	306
JOGO DE CAIXA	1410
JOGO DE CÁRTER DE INCLINAÇÃO	1372
JOGO DE CÁRTER DE INCLINAÇÃO (ASSENTO DA SUSPENSÃO)	1374
JOGO DE CARTUCHO (TRASEIRO)	994
	996
JOGO DE CHICOTE (ASSENTO COM SUSPENSÃO A AR)	1410
	1414
JOGO DE COIFA DE SUSPENSÃO	1408
	1418
JOGO DE COMPRESSOR	1410
JOGO DE CORDÃO	1410
	1414
JOGO DE CORREIAS EM V	109
JOGO DE CORREIAS EM V (INCLUI 4 CORREIAS)	57
	58
	59
	62
	63
	64
	65
	66
	70
	74
	75
	76
	109
JOGO DE ENGRENAGENS DO MOTOR DE PARTIDA	495
JOGO DE ESCOVA	1203
	1206
	1287
	1291
JOGO DE ESCOVAS DE MOTOR	1264
JOGO DE FILTRO DA TAMPA (TANQUE DE COMBUSTÍVEL)	308
	313
JOGO DE FILTRO DE COMBUSTÍVEL E SEPARADOR DE ÁGUA	246
	252
	292
JOGO DE FIXADOR DE CORREIA	1408
	1418
JOGO DE FIXADORES	1054
	1203
	1287
	1291
	1410
	1414
JOGO DE GAXETA	1102
	1104
JOGO DE GUIA DE TRILHO	1444
	1446
JOGO DE INCLINAÇÃO DO ASSENTO (FUNDO DO ASSENTO)	1348
JOGO DE INCLINAÇÃO TRASEIRA (FUNDO DO ASSENTO)	1348
JOGO DE INDICADOR	1299
	1302

ÍNDICE

Designação	Página
JOGO DE INSTALAÇÃO	198
JOGO DE LÂMINA DO LIMPADOR DE PÁRA-BRISA	1457
	1461
JOGO DE MAÇANETA DO ASSENTO	1372
JOGO DE MAÇANETA DO ASSENTO (ASSENTO DA SUSPENSÃO)	1374
JOGO DE MANCAL	1299
	1303
JOGO DE MANCAL (GARFO)	302
JOGO DE MANCAL (GARFO)(BOMBA HIDRÁULICA DA UNIDADE INJETORA)	300
	306
JOGO DE MANCAL (MOTOR DE PARTIDA)	494
JOGO DE MOLA	1298
	1302
JOGO DE MOLA DE FOLHA	1442
	1443
JOGO DE MOLA PNEUMÁTICA DO ASSENTO	1410
JOGO DE PALHETA	882
	883
	994
	996
JOGO DE PÁRA-CHOQUE	1298
	1302
JOGO DE PARAFUSO DE RETENÇÃO	392
	393
	394
JOGO DE RECEPTÁCULO (12 PINOS)	858
	1257
JOGO DE RECEPTÁCULO (2 PINOS)	74
	134
	136
	138
	152
	154
	315
	328
	329
	336
	344
	345
	352
	353
	360
	361
	368
	369
	416
	417
	443
	444
	466
	467
	474
	480
	498
	522
	526
	658
	844
	1051
	1052
	1053
	1056
	1202
	1203
	1206
	1211
	1256
	1260
	1264
	1266
	1286
	1287
	1290
	1291
	1294
	1308
	1312
	1316
	1320
	1410
	1414
JOGO DE RECEPTÁCULO (3 PINOS)	74
	152
	154
	158
	162
	166
	264
	414
	446
	447
	448
	449
	450
	451
	452
	463
	468
	469
	470
	888
	890
	1110
	1257
	1280
	1282

ÍNDICE

Designação	Página
	1428
	1432
JOGO DE RECEPTÁCULO (4 PINOS)	445
	880
	1047
	1048
	1049
	1054
	1320
	1428
	1432
JOGO DE RECEPTÁCULO (6 PINOS)	504
	876
	1202
	1206
	1211
	1269
	1280
	1282
	1286
	1290
	1294
	1330
	1331
	1332
	1452
	1454
	1456
	1460
JOGO DE RECONDICIONAMENTO	1306
JOGO DE RESPIRO	218
JOGO DE RETENTOR	60
	72
	260
	294
	296
	297
	660
	671
	880
	1043
	1047
	1048
JOGO DE RETENTOR (BOMBA HIDRÁULICA DA UNIDADE INJETORA)	300
	302
	306
JOGO DE RETENTOR DO CILINDRO HIDRÁULICO	900
	902
	926
	928
JOGO DE RETENTOR (UNIDADE INJETORA HIDRÁULICA)	298
JOGO DE RETENTOR (VÁLVULA DE SOLENÓIDE DE COMANDO DO VENTILADOR)	1052
JOGO DE RETENTOR (VÁLVULA SOLENÓIDE)	1050
	1053
	1056
JOGO DE REVISÃO	60
	72
JOGO DE ROLETE DE SUSPENSÃO	1408
	1418
JOGO DE ROLO	1410
	1414
JOGO DE SEGUIDOR	1298
	1299
	1303
JOGO DE TERMINAL	489
	495
JOGO DE TERMINAL ALTERNADOR	320
	322
JOGO DE TERMINAL (MOTOR DE PARTIDA)	485
JOGO DE TERMINAL RELÉ	322
JOGO DE TERMINAL RELÉ (ALTERNADOR)	320
JOGO DE TOMADA DE CONEXÃO (12 PINOS)	1257
JOGO DE TOMADA DE CONEXÃO (2 PINOS)	134
	136
	138
	352
	360
	368
	444
	672
	844
	1203
	1256
	1287
	1291
JOGO DE TOMADA DE CONEXÃO (3 PINOS)	48
	50
	52
	453
	454
	455
	456
	459
	460
	464
	1257
JOGO DE TOMADA DE CONEXÃO (3 PINOS) (SENSOR DE PRESSÃO)	457
	458
	461
	462

ÍNDICE

Designação	Página
JOGO DE TOMADA DE CONEXÃO (3 PINOS) (SENSOR DE SINCRONIZAÇÃO DA ROTAÇÃO DO MOTOR)	465
JOGO DE TOMADA DE CONEXÃO (4 PINOS)	352
	360
	368
	506
	508
	512
	516
	1428
	1432
JOGO DE TOMADA DE CONEXÃO (6 PINOS)	1202
	1206
	1286
	1290
	1428
	1432
JOGO DE TOMADA DE CONEXÃO (8 PINOS)	522
JOGO DE TRINCO	1444
	1446
JOGO-JANELA	1306
JUNTA (BOMBA DE ESCORVA DE COMBUSTÍVEL)	246
	291
	292
JUNTA UNIVERSAL	649

L

LÂMINA	1065
	1066
	1067
	1068
	1152
LÂMINA DO LIMPADOR DE PÁRA-BRISA	1456
	1460
LÂMINA E BORDA CORTANTE	1149
	1150
	1151
LÂMINA SEMI-UNIVERSAL	1154
	1159
	1160
	1162
	1164
LÂMINA UNIVERSAL	1156
	1157
	1158
	1166
	1168
	1170
	1172
LÂMPADA - FAROL	415
	416
	417
	418
	419
LÂMPADA - FAROL (24 VOLT) (SUSPENSO)	427
	428
LÂMPADA - FAROL (24 VOLT)(SUSPENSO)	426
	429
LÂMPADA - FAROL (24 VOLTS)(VERTICAL)	431
	432
LÂMPADA - TETO	414
LÂMPADA - TETO (24 VOLTS - COM INTERRUPTOR)	1234
LÂMPADA (24 V)	522
	526
	1352
LÂMPADA (24 V) (FAROL)	415
LÂMPADA (24 V) (TETO)	414
LÂMPADA (24 V) (65 WATTS)	416
LÂMPADA (24 VOLTS)(65 WATTS)	417
LÂMPADA (28 V)	1350
LAVADOR DO VIDRO	1428
	1432
LENTE (FAROL)	418
	419
LENTE (HOLOFOTE)	415
	416
LENTE (LÂMPADA DO TETO)	414
LENTE VERMELHA	1350
	1352
LENTES - FAROL	417
LEVANTAMENTO DO MOTOR	94
LIMPADOR DO VIDRO	1452
	1454
	1456
	1460
LUBRIFICAÇÃO-BARRA EQUALIZADORA	796
LUVA DE JUNÇÃO DE CABO	397

M

MAÇANETA	1235
	1460
MANCAL DE LUBRIFICAÇÃO	73
MANGUEIRA (ÁRTICO)	939
MÁQUINA - TEMPO FRIO	2
MATERIAL RODANTE	838
	839
	840
	841
	842
	843
MECANISMO DAS VÁLVULAS	110
MECANISMO DE DIREÇÃO	870
	872
MÓDULO - VELOCÍMETRO E TACÔMETRO	1332
MÓDULO DO OPERADOR	1328

ÍNDICE

Designação	Página
	1329
MÓDULO ELETRÔNICO DE QUATRO INDICADORES	1330
	1331
MOLA	494
	495
MOLA (ESCOVA DO MOTOR DE PARTIDA)	484
	485
MONITOR - VISOR	152
	154
MONTAGEM - BOMBA	1115
MONTAGEM - CABINE	1334
MONTAGEM - CILINDRO	1114
MONTAGEM - ESTRUTURA ROPS	1337
MONTAGEM - GUINCHO	1124
MONTAGEM - RIPER	1116
	1118
	1120
	1122
MONTAGEM - TRANSMISSÃO	628
MONTAGEM DE RÁDIO DE FAIXA DE ONDA CIVIL	1336
MOTOR	6
	8
	10
MOTOR ELÉTRICO	1266
MOTOR ELÉTRICO DE PARTIDA	484
	488
	491
	492
	494
MOTOR ELÉTRICO (27 VOLT)	1211
	1294
MUNHÃO DA LÂMINA	1138
	1140
	1142
	1143
MUNHÃO DO MOTOR	108

O

ÓLEO - ARRANJO PARA TROCA RÁPIDA	132
OPERADOR - ESPECIAL	1338
	1340
	1342

P

PACA - INFORMAÇÃO DE SERVIÇOS	1468
PAINEL DE INSTRUMENTOS	1350
	1352
PÁRA-LAMA	706
	708
PARAFUSO (1-14X3,75 POL)	598
PARTIDA EM TEMPO FRIO - ARRANJO	476
	480
PENEIRA DO TANQUE DE COMBUSTÍVEL	312
PISTÃO E BIELA	98
	99
PIVÔ DO LIMPADOR	1464
PLACA DE ADVERTÊNCIA (AQUECEDOR DO LÍQUIDO ARREFECEDOR DO MOTOR)	398
	402
PLACA DE ADVERTÊNCIA (AQUECEDORES)	398
	402
PLACA DE ADVERTÊNCIA (MOLA TENSORA)	744
	768
	770
	772
	774
	776
	778
	780
	848
PLACA DE ADVERTÊNCIA (ÓLEO DE MOLA TENSORA)	768
	770
	772
	774
	776
	778
	780
PLACA DE DESGASTE	1183
	1184
PLACA DE INSTRUÇÃO (CONDICIONADOR DE AR)	1200
	1201
PLACA E DECALQUE	1468
PLATAFORMA DA CABINE	1354
	1358
POLIA DO ALTERNADOR	324
	326
POLIA DO VIRABREQUIM	103
	104
PORTA FUSÍVEIS	506
	508
	512
	516
PÓS-ARREFECEDOR A ÁGUA	192
PRÊ-LUBRIFICAÇÃO	134
	136
	138
PRÉ-PURIFICADOR	207
	208
	209
PROTEÇÃO COM DOBRADIÇA	716
PROTETOR - COMANDO FINAL	714
PROTETOR - EIXO DE TRANSMISSÃO	600

ÍNDICE

Designação	Página
PROTETOR - EIXO PIVÔ	724
PROTETOR - RADIADOR	726
	728
PROTETOR - ROCHA	732
	733
PROTETOR - RODA-GUIA	718
PROTETOR - TRASEIRO	730
PROTETOR CONTRA CHUVA	197
PROTETOR CONTRA VANDALISMO	1277
PROTETOR INFERIOR	720
	722
PURIFICADOR DE AR	194
	195
	196

R

RADIADOR	178
	180
REBOQUE - GUINCHO	1194
	1195
RECEPTOR - SECADOR (CONDICIONADOR DE AR)	1320
RECEPTOR - SECADOR (REFRIGERANTE)	1253
	1256
	1260
	1308
	1312
	1316
RECLINAÇÃO - ASSENTO	1362
REGULADOR DE TEMPERATURA DA ÁGUA	166
REGULADOR DE TEMPERATURA DA ÁGUA (92 GRAUS CENTÍGRADOS)	158
	162
RESPIRO	26
	27
	216
	614
	618
	622
	796
	1070
	1102
RESPIRO (ALÍVIO DE PRESSÃO)	603
	609
RETEM	868
RETENTOR DE ANEL-O	554
	556
	558
	562
	566
	570
	574
	578
	582
	586
	590
	594
	942
	943
	949
	956
	958
	1026
RETENTOR DE ANEL-O (DIÂMETRO INTERNO DE 110,49 MM)	308
RETENTOR DO VIRABREQUIM	28
	30
	32
REVESTIMENTO DA CABINE	1307
RIPER	1133
	1134
	1135
	1185
	1186
	1187
	1188
	1189
	1190
RODA GUIA DAS ESTEIRAS	782
RODA-GUIA DAS ESTEIRAS	783
	784
	786
	788
	790
ROLDANAS DE GUIA DO GUINCHO	1089
ROLETE DE ESTEIRA DE FLANGE DUPLO	805
	806
	807
	808
	809
ROLETE DE ESTEIRA DE FLANGE SIMPLES	810
	811
	812
	813
	814
ROLETE SUPERIOR DA ESTEIRA	802
	803
	804
RUÍDO - ARRANJO PARA SUPRESSÃO	3
	1402

S

SACA-PINO	1125
	1126
	1128
SEGMENTO DA RODA MOTRIZ	639
	640
SEMI-EIXO - TREM DE FORÇA	531

ÍNDICE

Designação	Página
	532
	533
	534
SENSOR - NÍVEL DE COMBUSTÍVEL	445
SENSOR - PRESSÃO	202
	453
	454
	455
	456
	457
	458
	459
	460
	461
	462
SENSOR - PRESSÃO (ACIONAMENTO DA INJEÇÃO)	50
SENSOR - PRESSÃO (AR DE REFORÇO)	48
	50
	52
	54
SENSOR - PRESSÃO (ATMOSFÉRICA)	238
	240
SENSOR - PRESSÃO (ENTRADA DO TURBOALIMENTADOR)	203
SENSOR - PRESSÃO (ÓLEO DO MOTOR)	284
SENSOR - TEMPERATURA	158
	162
	166
	468
	469
	470
SENSOR - TEMPERATURA (COMBUSTÍVEL)	264
SENSOR - TEMPERATURA (ÓLEO DO TREM DE FORÇA)	346
	352
	360
	368
SENSOR - TEMPERATURA (ÓLEO HIDRÁULICO)	346
	354
	362
	370
SENSOR DE TEMPERATURA	152
	398
SENSOR DE TEMPERATURA (LÍQUIDO ARREFECEDOR)	154
SENSOR DE VELOCIDADE	92
	93
	345
	443
	463
	464
	465
	466
	467
SENSOR DE VELOCIDADE (ODÔMETRO)	329
	336
	353
	361
SENSOR DE VELOCIDADE (VENTILADOR)	60
	72
SENSOR MAGNÉTICO	443
SENSOR SUPRESSOR - CONTROLE DE RETARDAMENTO AUTOMÁTICO	134
	444
SILENCIADOR	206
SINCRONIZADOR	136
	138
	504
SISTEMA DE ILUMINAÇÃO	420
	422
SISTEMA DE ILUMINAÇÃO - FARÓIS	429
	430
	431
	432
SISTEMA ELETRÔNICO - MÁQUINA	1
SISTEMA ELETRÔNICO - TREM DE FORÇA	396
SOFTWARE - TREM DE FORÇA	396
	471
SOFTWARE - TREM DE FORÇA (APENAS SOFTWARE)	396
SOLENÓIDE	494
SOLENÓIDE DO MOTOR DE ARRANQUE	472
	488
SOLENÓIDE (MOTOR DE PARTIDA)	484
SUPORTE - CONTROLE	876
SUPORTE - ESCOVA	495
SUPORTE - ESCOVA (ESCOVA DO MOTOR DE PARTIDA)	484
SUPORTE DA LAMPADA INDICADORA	1352
SUPORTE DO MOTOR	106
	107
SUSPENSÃO	816
SUSPENSÃO - ASSENTO	1404
	1408
	1410
	1414
	1418
SUSPENSÃO - TRUQUE	815
	817
	818
	820

T

TAMPA	132
	248
	250
TAMPA - BLOCO DO MOTOR	21

ÍNDICE

Designação	Página
	22
TAMPA - BOCAL DE ENCHIMENTO	114
	602
	608
	614
	618
	622
TAMPA - BOCAL DE ENCHIMENTO DE ÓLEO	796
TAMPA - BOCAL DE ENCHIMENTO (HIDRÁULICO)	998
TAMPA - CAIXA DIANTEIRA	24
TAMPA - CAIXA DO VOLANTE	23
TAMPA - CONDICIONADOR DE AR (ROSCA DE 7/16 X 20)	1264
TAMPA - EMBARQUE	1088
TAMPA - MECANISMO DAS VÁLVULAS	26
	27
TAMPA - MUNHÃO	690
TAMPA - NÍVEL DO ÓLEO	798
	800
TAMPA - PORTA-FUSÍVEL	506
	508
	512
	516
TAMPA - RADIADOR	183
	184
	188
TAMPA - RECEPTÁCULO	506
	508
	512
	516
TAMPA - ROLETE DAS ESTEIRAS	766
TAMPA - TANQUE HIDRÁULICO	896
TAMPA COM RESPIRO	1424
TAMPA CONTRA POEIRA	101
	126
	216
	218
	220
	222
	224
	226
	410
	536
	550
	602
	603
	608
	609
	614
	618
	622
	651
	666
	668
	673
	877
	943
	948
	956
	998
	1040
TAMPA DA RODA-GUIA	764
	765
TAMPA DE CONECTOR	506
	508
TAMPA DO BOCAL DE ENCHIMENTO DO TANQUE DE COMBUSTÍVEL	216
	218
TAMPA DO TANQUE DE COMBUSTÍVEL	308
	313
TAMPA (ROSCA 13/16-16)	246
TAMPÃO	554
	556
	636
	646
	654
	656
	658
	678
	680
	682
TANQUE - LAVADOR DE JANELA	1420
	1421
	1422
	1424
	1426
TANQUE - LÍQUIDO ARREFECEDOR	183
TANQUE DE ÁGUA	184
	186
	188
	190
TANQUE DE COMBUSTÍVEL	308
	310
	312
	313
TANQUE HIDRÁULICO E FILTRO	998
TAPETE	1354
	1358
TAPETE INFERIOR	1334
TAPETE INFERIOR - ESPECIAL	1338
	1340
	1342
TAPETE SUPERIOR	1334
TAPETE SUPERIOR - ESPECIAL	1338
	1340
	1342
TELA	120
TELA DE PROTEÇÃO	1366
TELA DE SUCÇÃO	536

ÍNDICE

Designação	Página
	602
	608
	614
	618
	622
	646
	1136
TELA DO TANQUE DE COMBUSTÍVEL	250
	262
TELA FILTRANTE	998
TIRA	1442
	1443
TIRANTE DA LÂMINA	1064
TOMADA (TOMADA DE 24 VOLTS)	522
	526
TRANSMISSÃO	648
TRINCO	741
TUBOS - ÁGUA	156
	158
	161
	162
	166
TUBOS - APLICAÇÃO ÁRTICA	932
TUBOS - AQUECEDOR	1324
TUBOS - AR	200
	202
	203
TUBOS - AR CONDICIONADO	1308
	1312
	1316
	1320
TUBOS - BOMBA	942
	948
	956
TUBOS - CILINDRO DE INCLINAÇÃO	972
	974
	976
	978
	982
TUBOS - CILINDRO DE LEVANTAMENTO	934
	936
TUBOS - CILINDRO DO SACA-PINO	937
	938
	939
	940
TUBOS - COMBUSTÍVEL	262
TUBOS - FILTRO DO COMBUSTÍVEL	264
TUBOS - GUINCHO	986
	988
TUBOS - INCLINACÃO	971
TUBOS - INJETOR DA BOMBA HIDRÁULICA	268
TUBOS - ÓLEO DA TRANSMISSÃO	602
	608
	614
	618
	622
TUBOS - ÓLEO DO MOTOR	120
TUBOS - ÓLEO DO TURBOALIMENTADOR	130
TUBOS - RIPER	964
	968
	970
TUBOS - SUPRIMENTO DE ÓLEO	124
	126
TUBOS DO AQUECEDOR	1324
TURBOALIMENTADOR	212
	213
	214
	215

V

Designação	Página
VÁLVULA	144
	184
	186
	220
	222
	224
	226
	1020
	1032
	1036
	1038
	1040
	1041
	1211
	1324
VÁLVULA - ALÍVIO DO GATILHO	1027
VÁLVULA - ESFERA (CORTE MANUAL)	248
	250
	262
VÁLVULA (ÁGUA)	1294
VÁLVULA (ALÍVIO)	822
	824
	826
	828
	830
	832
	834
VÁLVULA DA DIREÇÃO E MONTAGEM	877
VÁLVULA DE ÁGUA	1202
	1206
	1286
	1290
VÁLVULA DE ALÍVIO	614
	618
	622
	666
	668
	1043
VÁLVULA DE CONTROLE	652

ÍNDICE

Designação	Página
	654
	656
	658
	666
	668
	878
	1022
	1024
	1026
	1031
	1032
	1034
	1036
VÁLVULA DE CONTROLE - TRANSMISSÃO	673
	674
VÁLVULA DE CONTROLE DE INCLINAÇÃO	1058
	1059
VÁLVULA DE CONTROLE DE PRESSÃO	264
	314
	662
	1040
	1144
VÁLVULA DE CONTROLE DO GUINCHO	1148
VÁLVULA DE CONTROLE E MONTAGEM	1016
	1017
VÁLVULA DE CONTROLE PILOTO	1038
	1039
VÁLVULA DE CONTROLE PILOTO (INCLINAR)	1039
VÁLVULA DE DERIVAÇÃO	1022
VÁLVULA DE DESVIO	998
VÁLVULA DE DRENAGEM	180
	678
	680
	682
	943
	948
	959
VÁLVULA DE ESCAPE	46
VÁLVULA DE MODULAÇÃO	660
VÁLVULA DE PARADA	167
VÁLVULA DE PRIORIDADE	664
VÁLVULA DE QUEDA RÁPIDA	1041
	1042
VÁLVULA DE RETENÇÃO	248
	250
	673
	1023
	1146
VÁLVULA DE RETENÇÃO (SISTEMA DO LAVADOR E LIMPADOR)	1421
	1422
	1426
VÁLVULA DE SEPARAÇÃO	1046
VÁLVULA DESVIADORA (SOMENTE CLIMA DE TEMPO FRIO)	1036
VÁLVULA DO COMANDO DO VENTILADOR E MONTAGEM	142
VÁLVULA (DRENO DO TANQUE DE ÁGUA)	188
	190
VÁLVULA E CILINDRO	1000
	1002
	1004
	1006
	1008
	1010
	1012
	1014
	1015
VÁLVULA E CILINDRO (DIREITO)	1065
	1066
VÁLVULA E CILINDRO (ESQUERDO)	1065
	1066
VÁLVULA-GRAXA (ABASTECIMENTO)	822
	830
	832
VÁLVULA PARA TIRAR AMOSTRAS DE FLUIDOS	550
	603
	609
	614
	618
	622
	998
VÁLVULA (PARTIDA A ÉTER)(24 VOLTS)	474
VÁLVULA PILOTO E MONTAGEM	650
	651
VÁLVULA (RETENÇÃO DE CARGA)	1026
VÁLVULA SELETORA	654
	656
	658
	670
	1018
	1146
VÁLVULA SELETORA E CONTROLE DE PRESSÃO	1044
VÁLVULA SOLENÓIDE	294
	671
	672
	880
	881
	1047
	1048
	1049
	1050
	1051
	1052
	1053
	1054

ÍNDICE

Designação	Página
	1056
	1058
VÁLVULA SOLENÓIDE (CONTROLE DE PRESSÃO)	296
	297
	298
VÁLVULA SOLENÓIDE (FUNÇÃO DE INCLINAÇÃO - TOMBAMENTO)	1059
VÁLVULA (VENTILADOR)	998
VEDAÇÃO	158
	162
	166
VEDADOR	172
	174
VENTILADOR	147
VENTILADOR - ALTERNADOR	322
VENTILADOR - ROTAÇÃO VARIÁVEL	152
	154
VENTILADOR - VARIÁVEL	148
	149
VENTILADOR DE SOPRO	150
	151
VIDRO - DESLIZADOR (LADO ESQUERDO) (MATIZADO)	1444
VIDRO FIXO - LADO DIREITO (MATIZADO)	1442
VIDRO FIXO - LADO ESQUERDO (MATIZADO)	1443
VIDRO (MATIZADO)	1234
	1436
	1437
	1447
	1448
VIDRO (VIDRO MATIZADO - VERDE)	1449
	1450
VIRABREQUIM	28
	30
	32
VOLANTE DO MOTOR	78

STICHWORTVERZEICHNIS

Bezeichnung	Seite
A	
ABDECKGLAS (ARBEITSSCHEINWERFER)	415 416 418 419
ABDECKGLAS (FAHRERHAUS-INNENLEUCHTE)	414
ABFALLBESEITIGUNGSMONTAGE	4
ABLASS (UMWELTFREUNDLICH)	548
ABLASSSTOPFEN	90 180 768 770 772 774 776 778 780 1070
ABLASSVENTIL	180 678 680 682 943 948 959
ABSPERRVENTIL	167
ABSTREIFBALKEN	742 744 762 763
ABSTREIFBALKEN (LINKS)	744
ABSTREIFBALKEN (RECHTS)	744
ABZUGSLEINE	397
ACHSWELLENSCHMIERUNG	798 800
ANSAUGSIEB	536 602 608 614 618 622 646 1136
ANSCHLUSSKLEMMENSATZ	489 495
ANSCHLUSSKLEMMENSATZ (STARTERMO-TOR)	485
ANTRIEBSSTRANG-WARTUNGSSATZ	471
ANTRIEBSWELLENVERKLEIDUNG	600
ANZEIGEN-EINBAUSATZ	1299 1302
ANZUGSLEINE	1410 1414
ARBEITSGERÄTEGESTÄNGE	1108 1110 1112
ARBEITSLEUCHTEN	415 416 417 418 419 429 430 431 432
ARBEITSLEUCHTEN (24 V) (HÄNGEND))	427 428
ARBEITSLEUCHTEN (24 VOLT)(HÄNGEND)	426 429
ARBEITSLEUCHTEN (24 V)(SENKRECHT)	431 432
ARBEITSLEUCHTENLINSE	417
ARMLEHNE	1213 1214
ARRETIERUNGSEINBAUSATZ	1444 1446
ASCHENBECHER	1280 1282
ÄTHERSTARTHILFE	474
AUFKLEBER	2 858 1278 1336 1465 1466
AUFKLEBER - CAT	1194 1195
AUFKLEBER - HEIZUNG	398 402
AUFKLEBER - MONITOR	1350 1352
AUFKLEBER - MÜLLVERTEILSCHILD	1465
AUFKLEBER - SCHALLDRUCKPEGEL	3 1402
AUFKLEBER - SICHERUNG	513 517
AUFKLEBER (ANWEISUNG) (PLANIERSCHILD-STEUERUNG)	1110
AUFKLEBER (ENTLÜFTUNGSVENTIL)	2
AUFKLEBER (RADIO)	1305
AUFKLEBER (SITZKISSENKENNUNG)	1346 1347
AUFKLEBER (VORSCHMIERPUMPE)	134 136 138
AUFREISSER	1185 1186 1187

STICHWORTVERZEICHNIS

Bezeichnung	Seite
	1188
	1189
	1190
AUFREISSER - TEILLISTE	1133
	1134
	1135
AUFREISSER-BOLZENZIEHERZYLINDER	924
AUFREISSERBEFESTIGUNG	1116
	1118
	1120
	1122
AUFREISSERHUBZYLINDER	912
	914
	916
	918
	920
	922
AUFREISSERHUBZYLINDER (LINKS)	1133
	1134
	1135
AUFREISSERHUBZYLINDER (RECHTS)	1133
	1134
	1135
AUFREISSERKIPPZYLINDER	926
	928
	930
AUFREISSERLEITUNGEN	964
	968
	970
AUFREISSERRAHMEN	1090
	1092
	1094
	1096
	1098
AUFREISSERZAHN	1191
	1192
	1193
AUSGLEICHER-EINBAUSATZ (HYDRAULISCHE PUMPENDÜSE)	300
	302
	306
AUSLASSVENTIL	46
AUSPUFFKRÜMMER	204
	205
AUSSCHALTER, MAGN.	443
AUTOM. DAUERBREMSENSTEUERUNTER-DRÜCKUNGSSENSOR	134
	444

B

Bezeichnung	Seite
BATTERIE UND VERDRAHTUNG	328
	336
	344
	352
	360
	368
BATTERIE (12 V)	336
	354
	362
	370
	476
	480
BATTERIE (12 V)	328
	344
BATTERIE (12 V/TROCKEN)	2
BEFESTIGUNGSSCHRAUBENSATZ	392
	393
	394
BEFESTIGUNGSTEILE	1054
	1203
	1287
	1291
BELEUCHTUNGSANLAGE	420
	422
	426
BELEUCHTUNGSANLAGE (AUFREISSER)	442
BLATTFEDERSATZ	1442
	1443
BODENPLATTE	1276
BOLZENZIEHER	1125
	1126
	1128
BOLZENZIEHERZYLINDERLEITUNGEN	937
	938
	939
	940
BREMSGESTÄNGE	852
	854
	856
BUCHSE - KABELSPLEISSUNG	397
BÜRSTEN-EINBAUSATZ	1203
	1206
	1287
	1291
BÜRSTENHALTER	495
BÜRSTENHALTER (STARTERMOTORBÜRSTE)	484
BÜRSTENSATZ	494
BÜRSTENSATZ (STARTERMOTOR)	484

D

Bezeichnung	Seite
DÄMPFER	56
DICHTUNG	172
	174
	1442
	1443
DICHTUNG (KRAFTSTOFFENTLÜFTUNGS-PUMPE)	246

STICHWORTVERZEICHNIS

Bezeichnung	Seite
	291
	292
DICHTUNGSSATZ	60
	72
	260
	294
	296
	297
	660
	671
	880
	1043
	1047
	1048
	1102
	1104
DICHTUNGSSATZ (HYDRAULISCHE PUMPENDÜSE)	298
	302
	306
DICHTUNGSSATZ (HYDRAULISCHE PUMPENDÜSE)	300
DICHTUNGSSATZ (LÜFTERANTRIEB - MAGNETVENTIL)	1052
DICHTUNGSSATZ (SOLENOIDVENTIL)	1050
	1053
	1056
DOPPELFLANSCHROLLEN	805
	806
	807
	808
	809
DOPPELKIPPZYLINDER	897
DOPPELKIPPZYLINDER UND LEITUNGEN	897
DOPPELKIPPZYLINDERSTEUERUNG	884
DOPPELNEIGEZYLINDER	908
	910
DREHKNOPFSCHALTER (GEBLÄSEGE-SCHWINDIGKEIT)	1280
	1282
DREHKNOPFSCHALTER (SCHEIBENWISCH- UND WASCHANLAGE)	1456
	1460
DREHMOMENTWANDLER	642
	644
	646
DREHSTROMGENERATOR	316
	318
	320
	322
	324
	326
DREHSTROMGENERATOR - AN-SCHLUSSKLEMMENSATZ	320
	322
DREHSTROMGENERATOR-RIEMENSCHEI-BE	324
	326
DREHSTROMGENERATOR-VENTILATOR	322
DREHZAHLSENSOR	92
	93
	345
	443
	463
	464
	465
	466
	467
DREHZAHLSENSOR (KILOMETERZÄHLER)	336
DREHZAHLSENSOR (KILOMETERZÄHLER)	329
	353
	361
DREHZAHLSENSOR (LÜFTER)	60
	72
DREHZAPFENVERKLEIDUNG	724
DRUCKKNOPFSCHALTER (HERUNTERSCHAL-TEN)	876
DRUCKKNOPFSCHALTER (HOCHSCHAL-TEN)	876
DRUCKLÜFTER	150
	151
DRUCKLUFTLEITUNGEN	200
	202
	203
DRUCKSCHALTER	1261
	1320
DRUCKSCHALTER (HOCH/NIEDRIG)	1256
	1260
	1308
	1312
	1316
	1320
DRUCKSCHALTER (HOCH/NIEDRIG)	1253
DRUCKSCHALTER (ÖL)	134
	136
	138
DRUCKSENSOR	202
	453
	454
	455
	456
	457
	458
	459
	460
	461
	462
DRUCKSENSOR (ATMOSPHÄRISCH)	238
	240
DRUCKSENSOR (EINSPRITZBETÄTIGUNG)	50

STICHWORTVERZEICHNIS

Bezeichnung	Seite
DRUCKSENSOR (LADELUFT)	48
	50
	52
	54
DRUCKSENSOR (MOTORÖL)	284
DRUCKSENSOR (TURBOEINLASS)	203
DRUCKSTEUERVENTIL	264
	314
	662
	1040
	1144

E

EINBAUSATZ	198
EINBAUSATZ - KRAFTSTOFFILTER UND WASSERABSCHEIDER	246
	252
	292
EINFÜLLKAPPE	114
	602
	608
	614
	618
	622
EINFÜLLSTUTZENKAPPE (HYDRAULIK)	998
EINSATZ (HINTEN)	994
	996
EINSPRITZLEITUNGEN - HYDRAULIKPUMPE	268
EINSTELLER-EINBAUSATZ (SITZWANNE)	1348
EINZELFLANSCHROLLEN	810
	811
	812
	813
	814
ELEKTR. UMFORMER	395
ELEKTRON. STEUERUNG (INSTRUMENTENBRETTBELEUCHTUNG)	1350
	1352
ELEKTRON. STEUERUNG UND ANBAUSATZ	376
	377
	378
ELEKTRONIK - MASCHINE	1
ENDMESSER	1149
ENDSCHALTER (BREMSE)	852
	854
	856
ENDSCHALTER (RÜCKWÄRTS)	860
	862
	864
ENTDUNSTER	116
ENTFROSTERGEBLÄSE	1274
ENTLÜFTER	26
	27
	614
	618
	622
	796
	1070
	1102
ENTLÜFTER (DRUCKBEGRENZUNG)	603
	609
ENTLÜFTUNGSSATZ	218
ENTLÜFTUNGSVORRICHTUNG	216

F

FAHRERHAUS	1216
	1218
	1220
	1221
	1222
	1224
	1225
	1226
	1228
	1234
	1237
FAHRERHAUS - SONDERAUSRÜSTUNG	1338
	1340
	1342
FAHRERHAUS (FÜR TIEFE UMGEBUNGSTEMPERATUREN)	1230
	1232
FAHRERHAUSANBAUSATZ	1334
	1336
FAHRERHAUSAUSKLEIDUNG	1307
FAHRERHAUSBELEUCHTUNG	414
FAHRERHAUSBELEUCHTUNG (24 V)(MIT SCHALTER)	1234
FAHRERHAUSFENSTER	1436
	1437
	1438
	1439
	1440
	1441
	1442
	1443
	1444
	1446
	1447
	1448
	1449
	1450
FAHRERHAUSFENSTER (HINT.)(SCHIEBEF.)	1234
FAHRERHAUSFENSTER (LINKS)	1437
FAHRERHAUSFENSTER (LINKS) (SCHIEBEFENSTER)	1435
FAHRERHAUSFENSTER (RECHTS)	1436

STICHWORTVERZEICHNIS

Bezeichnung	Seite
	1442
FAHRERHAUSFENSTER (RECHTS) (SCHIEBEFENSTER)	1435
FAHRERHAUSHEIZUNG	1280
	1282
	1286
	1290
	1294
FAHRERMODUL	1328
	1329
FAHRERPLATTFORM	1354
	1358
FAHRERPLATTFORMVERDRAHTUNG	522
	526
FAHRERSITZ	1367
	1372
	1374
	1376
	1377
	1378
	1379
	1380
	1381
	1382
	1384
	1386
	1387
FAHRERSITZ, KIPPVORRICHTUNG (SITZWANNE)	1348
FAHRERSITZ (LENDENWIRBEL)	1379
	1381
	1388
	1389
	1390
FAHRERSITZ (LENDENWIRBEL) (STOFF)	1380
FAHRERSITZ (PVC)(LENDENWIRBEL)	1391
	1392
	1393
FAHRERSITZFEDERUNG	1404
	1408
	1410
	1414
	1418
FAHRERSITZFEDERUNGSGEHÄUSE	1298
	1302
FAHRERSITZVERKLEIDUNG	1348
FAHRERSITZVERKLEIDUNG (SITZFLÄCHE)	1372
FAHRERSITZVERSTELLER	1196
	1197
	1198
FEDER	494
	495
FEDER-EINBAUSATZ	1298
	1302
FEDER (STARTERMOTORBÜRSTE)	484
	485
FEDERUNG	816
FEDERUNGS-EINBAUSATZ (EINSTELL-KNOPF)	1298
	1302
FEDERUNGS-EINBAUSATZ (MANSCHETTE)	1408
	1418
FEDERUNGS-EINBAUSATZ (ROLLE)	1408
	1418
FENSTER, LINKS (ARKTISCHE TEMPERATUREN)	1230
	1232
FENSTERSATZ	1306
FESTSTELLBREMSGESTÄNGE	858
FILTER	202
	203
	246
	252
	292
	1086
FILTER (HYDRAULISCHE PUMPENDÜSE)	234
	242
	244
FILTER (SCHWER ENTFLAMMBARE FLÜSSIGKEIT)	998
FILTER (WASSERPUMPE)	172
	174
	176
FILTERPATRONE	310
FILTERSATZ	310
FILTERSATZ (WASSERABSCHEIDER U. KRAFTSTOFFILTER)	253
FILTERSIEB	998
FLÜGELSATZ	882
	883
	994
	996
FLÜGELZELLENPUMPENEINSATZ	882
	883
FRONTBELEUCHTUNG	434
	435
	436
	437
	438
FUSSMATTE	1354
	1358
FUSSMATTE (OBERE)	1334
FUSSMATTE, OBERE - SONDERAUSFÜHRUNG	1338
	1340
	1342
FUSSMATTE (UNTERE)	1334
FUSSMATTE (UNTERE) - SONDERAUSFÜHRUNG	1338
	1340

STICHWORTVERZEICHNIS

Bezeichnung	Seite
	1342

G

GASREDUZIERGESTÄNGE	228 230 232
GEGENGEWICHT	686 688 689
GEGENGEWICHT UND BALKEN, HINTEN	684
GEHÄUSE-EINBAUSATZ	1410
GESCHWINDIGKEITS- U. DREHZAHLMESSER-MODUL	1332
GETRIEBE	648
GETRIEBEAUFLAGER	628
GETRIEBEHYDRAULIK	540 542 544
GETRIEBEÖLKÜHLER	546
GETRIEBESTEUERUNG UND BEFESTIGUNGS-TEILE	538
GETRIEBESTEUERVENTIL	673 674
GLAS (GETÖNT)	1234 1436 1437 1447 1448
GLAS (GETÖNT)(GRÜN)	1449 1450
GLASSCHEIBEFENSTER, LINKS (GETÖNT)	1444
GLEITSCHIENENBLOCK-EINBAUSATZ	1388 1389 1390 1391 1392 1393 1397 1398 1399 1400 1401
GRUNDRAHMEN - ANZEIGELEUCHTE	1352

H

HALTETEILE-TRENNSCHALTER	397
HALTETEILESATZ	1410 1414
HANDGRIFFSCHALTER	502 1110
HAUPTANTRIEBSWELLE	641
HAUPTFILTER	196
HECKBELEUCHTUNG	424 425 439 440
HECKVERKLEIDUNG	730
HEIZUNG	1278
HEIZUNGSLEITUNGEN	1324
HEIZUNGSSCHALTER	398 402
HINWEISSCHILD (HEIZUNGEN)	398 402
HUBZYLINDERLEITUNGEN	934 936
HYDRAULIKÖLKÜHLER	893 894
HYDRAULIKPUMPE UND LEITUNGEN	942 948 956
HYDRAULIKPUMPENANTRIEB	234 236 237 238 239 240 242 244
HYDRAULIKSTEUERUNG	886 888 890 892
HYDRAULIKTANK UND SCHMIERFILTER	998
HYDRAULIKZYLINDER-DICHTUNGSSATZ	900 902 926 928

I

IDENTIFIZIERUNGS-AUFKLEBER	1350
IDENTIFIZIERUNGS-AUFKLEBER (GRUPPEN- U. SEQUENZNR.)	1202 1206 1210 1264 1266 1286 1290 1294
IDENTIFIZIERUNGS-AUFKLEBER (SICHERUNG)	154 506 508
INSTRUKTIONS-AUFKLEBER	886 1456 1460

STICHWORTVERZEICHNIS

Bezeichnung	Seite
INSTRUKTIONS-AUFKLEBER (AUFREISSER - BOLZENZIEHSCHALTER)	888 890
INSTRUKTIONS-AUFKLEBER (AUFREISSER-STEUERUNG)	1108
INSTRUKTIONS-AUFKLEBER (FÜR SITZVERSTELLUNG)	1408 1414 1418
INSTRUKTIONS-AUFKLEBER (PALNIER-SCHILDSTEUERUNG)	1468
INSTRUKTIONS-AUFKLEBER (WASSER - EINLASS/AUSLASS)	1206 1210 1286 1290 1294
INSTRUKTIONS-AUFKLEBER (WASSER - EINLASS/AUSLASS)	1202
INSTRUKTONSSCHILD (KLIMAANLAGE)	1200 1201
INSTRUMENTENBRETT-AUFKLEBER	1280 1282 1350 1352
INSTRUMENTENTAFEL	1350 1352

J

JOCHSATZ	111 112

K

KABELSTRANG (DRUCKSENSOR)	457
KABELSTRANG (SOCKEL) (DRUCKSEN-SOR)	457
KÄLTEMITTELKOMPRESSOR	1238 1239 1240 1241 1242 1244 1246 1248
KÄLTEMITTELKONDENSATOR	1264 1266 1268
KÄLTEMITTELKONDENSATOR U. BEFESTIGUNGSTEILE	1250 1252 1256 1260
KÄLTEMITTELTROCKNER (KLIMAANLAGE)	1320
KÄLTEMITTELTROCKNER (KÜHLMITTEL)	1256 1260 1308 1312 1316
KÄLTEMITTELTROCKNER (KÜHLMITTEL)	1253
KALTWETTERAUSRÜSTUNG	1 2
KALTWETTERSTARTANLAGE	476 480
KAPPE	132 248 250
KAPPE MIT ENTLÜFTER	1424
KAPPE (13/16-16-GEWINDE)	246
KAPPENFILTERSATZ (KRAFTSTOFFTANK)	313
KAPPENFILTERSATZ (KRAFTSTOFFTANK)	308
KEILRIEMEN	109 152 154 318 324 326 1242 1244 1248
KEILRIEMENSATZ	109
KEILRIEMENSATZ (EINSCHL. 4 RIEMEN)	57 58 59 109
KEILRIEMENSATZ (EINSCHL. 4 RIEMEN)	62 63 64 65 66 70 74 75 76
KETTENGLIEDER	792 793 794
KETTENRADSEGMENT	639 640
KETTENSPANNER UND -FEDERRÜCKLAUF	822 824 826 828 830 832 834
KETTENSPANNER UND -FEDERRÜCKLAUF (RECHTS)	838
KIPPSCHALTER (FAHRER)	523

STICHWORTVERZEICHNIS

Bezeichnung	Seite
	526
KIPPSCHALTER (FESTSTELLBREMSE)	858
KIPPSCHALTER (GEBLÄSEREGELUNG)	1274
KIPPSCHALTER (KLIMAANLAGE EIN/AUS)	1280
	1282
KIPPSCHALTER (SEITENLEUCHTE)	523
	526
KIPPSCHALTER (SPERREN) (AUFREISSEBOLZENZIEHER)	888
KIPPSCHALTER (SPERREN) (AUFREISSEBOLZENZIEHER)	890
KIPPSCHALTER (SPERRSCHALTER)	886
KIPPSCHALTER (STARTHILFE)	522
	526
KIPPSCHALTER (ZUSATZ)	522
	526
KIPPSTEUERVENTIL	1058
	1059
KIPPVORRICHTUNG NACH HINTEN, REPARATURSATZ (SITZWANNE)	1348
KIPPWANNENSATZ	1372
KIPPWANNENSATZ (SCHWINGSITZ)	1374
KIPPZYLINDERLEITUNGEN	971
KLEMMLEISTE	413
KLIMAANLAGE	1200
	1201
	1202
	1206
	1210
KLIMAANLAGEN-ANSCHLUSSSTÜCK	1260
	1320
KLIMAANLAGEN-DRUCKSPEICHER	1260
	1320
KLIMAANLAGEN-VENTILKAPPE (7/16 X 20 GEWINDE)	1264
KLIMAANLAGENLEITUNGEN	1308
	1312
	1316
	1320
KNOPF	1235
	1460
KNOPF (ARMLEHNENEINSTELLUNG)	844
KOMPRESSORSATZ	1410
KONSOLENVERDRAHTUNG	506
	508
	512
	516
KRAFTSTOFF-ENTLÜFTUNGSPUMPE	291
KRAFTSTOFFEINSPRITZDÜSE	255
	256
	257
	258
	259
	286
KRAFTSTOFFEINSPRITZPUMPE	286
	287
	288
	289
	290
KRAFTSTOFFEINSPRITZPUMPE - EINBAUSATZ (ÜBERHOLUNG)(HYDRAULISCHE PUMPENDÜSE)	300
	302
KRAFTSTOFFENTLÜFTUNGSPUMPE UND -HAUPTFILTER	292
KRAFTSTOFFHEIZUNG	406
	408
KRAFTSTOFFILTER	248
	250
	264
KRAFTSTOFFILTER UND LEITUNGEN	246
KRAFTSTOFFILTERLEITUNGEN	264
KRAFTSTOFFKAPPE	216
	218
KRAFTSTOFFLEITUNGEN	262
KRAFTSTOFFÖRDERPUMPE	294
	296
	297
	298
	300
	302
	304
KRAFTSTOFFSIEB	308
KRAFTSTOFFSTANDSENSOR	445
KRAFTSTOFFTANK	308
	310
	312
	313
KRAFTSTOFFTANK-SIEBEINSATZ	312
KRAFTSTOFFTANKKAPPE	308
	313
KRAFTSTOFFTANKSIEB	250
	262
KRAFTÜBERTRAGUNGSACHSE	531
	532
	533
	534
KRAFTÜBERTRAGUNGSELEKTRONIK	396
KRAFTÜBERTRAGUNGSSTEUERUNG	391
KREUZGELENK	649
KREUZGELENK UND LAGER	649
KRÜMMER UND VENTIL	626
	627
	874
	875
KRÜMMERSCHILD	210
KUGELVENTIL (MANUELLE ABSTELLUNG)	248
	250
	262
KÜHLER	178

STICHWORTVERZEICHNIS

Bezeichnung	Seite
	180
KÜHLERKAPPE	183
	184
	188
KÜHLERSCHUTZ	726
	728
KÜHLMITTELBEHÄLTER	183
KÜHLMITTELHEIZUNG	398
	402
KÜHLMITTELPUMPE	398
KÜHLWASSERLEITUNGEN	156
	158
	161
	162
	166
KÜHLWASSERPUMPE	169
	170
	171
	172
	174
	176
KÜHLWASSERPUMPEN-REGENERIERSATZ	172
	174
	1306
KÜHLWASSERPUMPEN-REGENERIERSATZ (WASSER)	176
KÜHLWASSERZUSATZELEMENT	143
	144
KUPPLUNG UND ANTRIEB	1074
KURBELWELLE	28
	30
	32
KURBELWELLEN-RIEMENSCHEIBE	103
	104
KURBELWELLENDICHTUNG	28
	30
	32

L

Bezeichnung	Seite
LADELUFTKÜHLER, WASSERGEKÜHLT	192
LAGERSATZ	1299
	1303
LAGERSATZ (GABEL)(HYDRAULISCHE PUMPENDÜSE)	300
	306
LAGERSATZ (JOCH)	302
LAGERSATZ (STARTER)	494
LAGERSCHMIERMITTEL	73
LAUFFÜHRUNGSSATZ	1444
	1446
LAUFROLLENAUFSATZ	766
LAUFROLLENRAHMEN-KNICKFEDERUNG	815
	817
	818
	820
LAUFROLLENRAHMEN (TELESKOPRÜCK-LAUF)	767
	768
	770
	772
	774
	776
	778
	780
LAUFWERKSKETTE	836
	837
	838
LAUFWERKSRAHMEN	838
	839
	840
	841
	842
	843
LEITRAD	782
	783
	784
	786
	788
	790
LEITRADAUFSATZ	764
	765
LEITRADSCHUTZ	718
LEITUNGEN FÜR DEN EINSATZ IN ARKTISCHEN UMGEBUNGSTEMPERATUREN	932
LENK- UND GETRIEBEEINSTELLER	844
LENK- UND GETRIEBESTEUERUNG	860
	862
	864
	866
LENKKUPPLUNG UND BREMSE	848
	850
LENKTRIEB	870
	872
LENKVENTIL U. BEFESTIGUNGSTEILE	877
LEUCHTE (24 V)	522
	526
	1352
LEUCHTE (24 V)	522
LEUCHTE (24 V) (ARBEITSSCHEINWERFER)	415
LEUCHTE (24 V) (FAHRERHAUSDACH)	414
LEUCHTE (24 V) (65 W)	416
LEUCHTE (24 V)(65 W)	417
LEUCHTE (28 V)	1350
LINSE - ROT	1350
	1352
LIPPENDICHTUNG	158
	162
	166

STICHWORTVERZEICHNIS

Bezeichnung	Seite
LÜFTER	147
LÜFTER, HÖHENVERSTELLBAR	152
	154
LÜFTER (VERSTELLBAR)	148
	149
LÜFTERANTRIEB	57
	58
	59
	60
	61
	62
	63
	64
	65
	66
	67
	68
	70
	72
	73
	74
	75
	76
LÜFTERANTRIEB (ARKTIK)	1
LÜFTERANTRIEBSVENTIL U. BEFESTIGUNGS-SATZ	142
LÜFTERBLATTSATZ	152
LUFTFEDER-EINBAUSATZ	1410
LUFTFILTER (FAHRERHAUS)	1280
	1282
LUFTREINIGER	194
	195
	196

M

Bezeichnung	Seite
MAGNETFILTER	1136
MAGNETSCHALTER	477
	506
	512
	516
MAGNETSCHALTER (HAUPTRELAIS)	506
	508
	512
	516
MAGNETSCHALTER (HAUPTSCHALTER)	480
MAGNETSCHALTER (STARTRELAIS)	508
MAGNETSCHALTER (VORSCHMIERANLA-GE)	138
MAGNETSIEB	1136
MAGNETSPULE	494
MAGNETSPULE - ANLASSMOTOR (ELEKTR.)	472
MAGNETSPULE - ANLASSMOTOR (ELEKTR.)	488
MAGNETSPULE (STARTERMOTOR)	484
MAGNETSTOPFEN	558
	562
	566
	570
	574
	578
	582
	586
	590
	594
MAGNETVENTIL	294
	671
	672
	880
	881
	1047
	1048
	1049
	1050
	1051
	1052
	1053
	1054
	1056
	1058
MAGNETVENTIL (DRUCKBEGRENZUNG)	296
	297
	298
MAGNETVENTIL (NEIGE-/KIPPFUNKTION)	1059
MESSERPUMPE	994
	996
MESSSTAB UND KAPPE	310
MODUL - VIER ELEKTRON. ANZEIGEN	1330
	1331
MODULATORVENTIL	660
MONITORANZEIGE	152
	154
MONITORSTEUERUNG (CATERPILLAR ÜBERWACHUNGSSYSTEM)	1352
MONTAGEZAPFEN	108
MONTAGEZAPFEN (PLANIERSCHILDEINRICH-TUNG)	1138
	1140
	1142
	1143
MONTAGEZAPFENVERKLEIDUNG	690
MOTOR, ELEKTR.	1266
MOTOR, ELEKTR. (27 V)	1211
	1294
MOTORAUFHÄNGUNG	106
	107
MOTORAUSFÜHRUNG	6
	8
	10

STICHWORTVERZEICHNIS

Bezeichnung	Seite
MOTORBLOCK	34
	36
	38
	40
MOTORBLOCKDECKEL	21
	22
MOTORBÜRSTENSATZ	1264
MOTORHAUBE UND VERKLEIDUNG	736
MOTORHUBÖSE	94
MOTORNENNLEISTUNGSSTEUERUNG, ELEKTRON.	384
	385
	386
MOTORÖLEINFÜLLSTUTZEN	114
MOTORÖLKÜHLER	145
MOTORÖLLEITUNGEN	120
MOTORSTEUERUNG, ELEKTRON.	387
	388
	389
	390
MOTORVERDRAHTUNG	520
MOTORVERKLEIDUNG	694
	698
MOTORVORSCHMIERUNG	134
	136
	138

N

NEBENSTROMFILTER	1069
NEBENSTROMVENTIL	1022
NEIGEZYLINDERLEITUNGEN	972
	974
	976
	978
	982
NICHT BESTEIGEN-AUFKLEBER	398
	402
NIPPEL	746
NOCKENWELLE	20

O

O-RING-DICHTUNG	554
	556
	558
	562
	566
	570
	574
	578
	582
	586
	590
	594
	942
	943
	949
	956
	958
	1026
O-RING-DICHTUNG (110,49 MM INNENDURCHMESSER)	308
O-RING-STOPFEN	74
O-RING-STOPFEN (7/16-20 GEWINDE)	101
ÖLABLASSSCHRAUBE	96
ÖLEINFÜLLSTUTZEN	796
ÖLFILTER	550
	552
	554
	556
ÖLFILTERELEMENT	552
	554
	556
	614
	618
	622
ÖLFILTERELEMENT (HYDRAULIK/ STROMUMKEHRUNG) (NICHT WIEDERVERWENDBAR)	998
ÖLKÜHLERBLOCK	146
	163
	167
ÖLKÜHLERBLOCK (MOTOR)	145
	163
	167
ÖLLEITUNGEN - KRAFTÜBERTRAGUNG	602
	608
	614
	618
	622
ÖLMESSSTAB	118
ÖLPUMPEN-BEFESTIGUNGSTEILE	113
ÖLSCHNELLWECHSELANSCHLUSS	132
ÖLSTANDKAPPE	798
	800
ÖLWANNE	96
ÖLZUFUHRLEITUNGEN	124
	126

P

PANZERWANNE	720
	722
PENDELVENTIL	1046
PLANETENANTRIEBSGEHÄUSE U. TEILE	536
PLANETENGETRIEBE	630
PLANIEREINRICHTUNG	1065
	1066
	1067

STICHWORTVERZEICHNIS

Bezeichnung	Seite
	1068
PLANIERSCHILDHUBZYLINDER	898
	900
	1000
	1002
	1006
	1010
	1012
PLANIERSCHILDKIPPZYLINDER	902
	904
	906
PLANIERSCHILDKIPPZYLINDER (LINKS)	897
PLANIERSCHILDKIPPZYLINDER (RECHTS)	897
PLEUELSTANGE UND KOLBEN	98
	99
POLSTEREINBAUSATZ (RÜCKLEHNENVERLÄNGERUNG)	1272
POLSTEREINBAUSATZ (VINYLRÜCKENLEHNE)	1273
PROBEENTNAHMEVENTIL	550
	603
	609
	614
	618
	622
	998
PUMPE UND BEFESTIGUNGSTEILE	270
	272
	274
	276
	278
	280
	282
	284
PUMPE UND LEITUNGEN	990
PUMPEN-EINBAUSATZ (ÜBERHOLUNG) (HYDRAULISCHE PUMPENDÜSE)	306
PUMPENANSCHLUSS	547
PUMPENAUFHÄNGUNG	1115
PUMPENDÜSE, HYDRAULISCH	294
	296
	297
	298
	300
	302
	304
	306
PUMPENDÜSE, HYDRAULISCH	294

Q

Bezeichnung	Seite
QUERTRAVERSE	746
	748
	750
	751
	752
	754
	756
	757
	758
	759
	760
	761

R

Bezeichnung	Seite
RADIOEINBAUSATZ	1305
RAHMEN UND GEHÄUSE	678
	680
	682
RECHTES SCHIEBEGLASFENSTER (GETÖNT)	1446
REGENKAPPE	197
RELAISANSCHLUSSKLEMMENSATZ	322
RELAISANSCHLUSSKLEMMENSATZ (DREHSTROMGENERATOR)	320
RIEMENSPANNER	12
	14
	16
	18
ROHRSTOPFEN	399
ROLLENFÜHRUNG	1101
ROLLENSATZ	1410
	1414
ROLLENTURM	1089
RÜCKENSTÜTZEN-EINSTELLKNOPF	1347
RÜCKFAHRWARNHORN	352
	368
RÜCKLEHNENVERLÄNGERUNG	1272
	1273
	1386
	1387
RÜCKSPIEGEL	1326
	1327

S

Bezeichnung	Seite
SANDSTRAHLSCHUTZGITTER	713
SAUGGLOCKENSIEB	120
SCHALE - RÜCKENLEHNE	1344
	1345
	1346
	1347
SCHALE - RÜCKENLEHNE (SITZLEHNE)	1372
SCHALLDÄMPFER	206
SCHALLDÄMPFUNG	3
	1402
SCHALTER	504
	527
SCHALTER (FRONTBELEUCHTUNG)	523

STICHWORTVERZEICHNIS

Bezeichnung	Seite
	527
SCHALTER (HUPE)	522
SCHALTER (KIPPSCHALTER) (KONSOLE ANHEBEN/ABSENKEN)	844
SCHALTER (RÜCKLEUCHTE)	522
	526
SCHALTER (STEUERUNG - SPITZE)	502
SCHALTER (STEUERUNG FÜR EINEN/ZWEI KIPPZYLINDER(N))	502
SCHALTER (VORSCHMIERUNGS-ZEITGEBER)	134
SCHALTER (24 V)(ERLEUCHTET) (GASSTEUERUNG)	526
SCHALTER (24 V)(ERLEUCHTET) (GASSTEUERUNG)	522
SCHALTVENTIL	654
	656
	658
	670
	1018
	1146
SCHAUMFILTER	330
	337
	345
	354
	362
	370
SCHEIBENWASCHANLAGE	1428
	1432
SCHEIBENWASCHMITTELBEHÄLTER	1420
	1421
	1422
	1424
	1426
SCHEIBENWISCHER	1452
	1454
	1456
	1460
SCHEIBENWISCHERBLATT	1152
	1456
	1460
SCHEIBENWISCHERBLATTSATZ	1457
	1461
SCHEINWERFER (24 V) (ARBEITSSCHEIN-WERFER)	418
	419
SCHIEBEFENSTER	1435
	1438
	1449
SCHIEBEFENSTER (LINKS)	1234
SCHIEBEFENSTER (RECHTS)	1234
SCHILD-SERVICEINFORMATIONEN	1468
SCHILD UND AUFKLEBER	1468
SCHILD UND SCHNEIDMESSER	1149
	1150
	1151
SCHILDSTREBE	1064
SCHLAUCH (ARKTISCH)	939
SCHLÜSSEL	308
	312
SCHLÜSSEL (HAUPTSCHALTER)	499
SCHMIERNIPPEL	18
	70
	76
	746
	748
	752
	757
	786
	824
	826
	828
	834
	902
	904
	906
	908
	910
	912
	914
	916
	918
	920
	930
	1089
	1090
	1092
	1094
	1096
	1098
	1103
	1104
	1114
SCHMIERNIPPEL (1/8-27-GEWINDE)	582
	754
	759
	760
	761
	922
SCHMIERNIPPEL (1/8-27-GEWINDE)	1064
SCHMIERPUMPE	140
SCHMIERVENTIL (FÜLLEN)	822
	830
	832
SCHMIERVORRICHTUNG - QUERTRAVER-SE	796
SCHNEIDMESSER UND EINSATZSTÜCK	1175
	1176
	1177
	1178

STICHWORTVERZEICHNIS

Bezeichnung	Seite
	1179
	1180
	1181
	1182
SCHNELLBETANKUNGSANSCHLUSS	216
	218
	220
	222
	224
	226
SCHNELLSENKVENTIL	1041
	1042
SCHRAUBE	554
	556
	636
	646
	654
	656
	658
	678
	680
	682
SCHRAUBE (1-14X3,75 ZOLL)	598
SCHUBARM	1130
SCHUBARM, LINKS	1131
SCHUBARM, RECHTS	1132
SCHUBBLOCK	1060
	1061
	1062
	1063
SCHUTZBLECHE	706
	708
SCHUTZBLECHVERKLEIDUNG	700
	702
	704
SCHUTZDICHTUNG	734
	735
SCHUTZGITTER	1366
SCHUTZVERKLEIDUNG	1277
SCHWINGSITZ	1376
	1377
	1388
	1389
	1390
	1391
	1392
	1393
	1394
	1396
	1397
	1398
	1399
	1400
	1401
SCHWINGSITZ (LENDENWIRBEL)	1220
SCHWUNGRAD	78
SCHWUNGRADGEHÄUSE	90
SCHWUNGRADGEHÄUSEDECKEL	23
SEILWINDENANTRIEB	1174
SEILWINDENAUFHÄNGUNG	1124
SEITENANTRIEB	558
	562
	566
	570
	574
	578
	582
	586
	590
	594
SEITENANTRIEBSVERKLEIDUNG	714
SEITENFENSTER (ARKTISCHE TEMPERATUREN)	1230
	1232
SENSORANSCHLUSSSATZ (12POLIG)	1257
SENSORANSCHLUSSSATZ (2POLIG)	134
	136
	138
	352
	360
	368
	444
	672
	844
	1203
	1256
	1287
	1291
SENSORANSCHLUSSSATZ (3POLIG)	50
	52
	453
	454
	455
	456
	459
	460
	464
	1257
SENSORANSCHLUSSSATZ (3POLIG)	48
SENSORANSCHLUSSSATZ (3POLIG)	1257
SENSORANSCHLUSSSATZ (3POLIG) (DRUCKSENSOR)	457
	458
	461
	462
SENSORANSCHLUSSSATZ (3POLIG) (SENSOR FÜR DREHZAHL UND EINSPRITZZEITPUNKT)	465
SENSORANSCHLUSSSATZ (4 POLIG)	352
	360

STICHWORTVERZEICHNIS

Bezeichnung	Seite
	368
	506
	508
	516
	1428
	1432
SENSORANSCHLUSSSATZ (4 POLIG)	512
SENSORANSCHLUSSSATZ (6POLIG)	1428
	1432
SENSORANSCHLUSSSATZ (6POLIG)	1202
	1206
	1286
	1290
SENSORANSCHLUSSSATZ (8POLIG)	522
SICHERHEITSFILTER	196
SICHERHEITSGURT	1368
	1369
	1370
	1386
	1387
	1390
SICHERHEITSGURT ((AUTOMATIKSICHERHEITSGURT))	1379
	1380
	1381
	1388
	1389
	1391
	1392
	1393
SICHERUNG	398
SICHERUNG (10 A)	506
	508
	513
	517
SICHERUNG (1/4 A)	152
	154
SICHERUNG (15 A)	152
	154
	506
	508
	513
	517
SICHERUNG (20 A)	506
	508
	512
	516
SICHERUNGSHALTER	506
	508
	512
	516
SICHERUNGSHALTERKAPPE	506
	508
	512
	516
SIEB	998
SITZGURT-HALTESEIL	1408
	1418
SITZHEBEL-EINBAUSATZ	1372
SITZHEBEL-EINBAUSATZ (SCHWINGSITZ)	1374
SITZKISSENEINBAUSATZ (PVC)	1372
SITZKISSENEINBAUSATZ (SCHWINGSITZ)	1374
SOFTWARE - KRAFTÜBERTRAGUNG	396
	471
SOFTWARE - KRAFTÜBERTRAGUNG (NUR SOFTWARE)	396
SPERRE	868
SPERRVENTIL	248
	250
	673
	1023
	1146
SPERRVENTIL (SCHEIBENWISCHER- U. -WASCHERANLAGE)	1421
	1422
	1426
STABILISATORGELENK	1106
	1107
STARTERMOTOR	484
	488
	491
	492
	494
STARTERMOTORZAHNRAD	495
STARTSCHALTER	503
STAUBAUSWERFER	197
STAUBKAPPE	101
	126
	216
	218
	220
	222
	224
	226
	410
	536
	550
	602
	603
	608
	609
	614
	618
	622
	651
	666
	668
	673
	877
	943

STICHWORTVERZEICHNIS

Bezeichnung	Seite
	948
	956
	998
	1040
STECKDOSE (24-V-ANSCHLUSS)	526
STECKDOSE (24-V-ANSCHLUSS)	522
STECKDOSEN - EINBAUSATZ (12POLIG)	858
	1257
STECKDOSEN - EINBAUSATZ (2POLIG)	134
	136
	138
	152
	154
	315
	328
	329
	336
	344
	345
	352
	353
	360
	361
	368
	369
	444
	474
	480
	498
	522
	526
	658
	1051
	1052
	1053
	1056
	1203
	1206
	1256
	1260
	1264
	1266
	1286
	1287
	1290
	1291
	1308
	1312
	1316
	1320
	1410
STECKDOSEN - EINBAUSATZ (2POLIG)	466
	467
STECKDOSEN - EINBAUSATZ (2POLIG)	443
	1202
STECKDOSEN - EINBAUSATZ (2POLIG)	1414
STECKDOSEN - EINBAUSATZ (2POLIG)	74
	416
	417
	844
	1211
	1294
STECKDOSEN - EINBAUSATZ (3POLIG)	152
	154
	264
	414
	446
	447
	448
	449
	450
	451
	452
	888
	1257
	1280
	1282
	1428
	1432
STECKDOSEN - EINBAUSATZ (3POLIG)	463
	468
	469
	470
STECKDOSEN - EINBAUSATZ (3POLIG)	158
	162
	166
	890
	1110
STECKDOSEN - EINBAUSATZ (3POLIG)	74
STECKDOSEN - EINBAUSATZ (4 POLIG)	1047
	1048
	1049
STECKDOSEN - EINBAUSATZ (4 POLIG)	445
	880
	1054
	1320
	1428
	1432
STECKDOSEN - EINBAUSATZ (6POLIG)	504
	876
	1202
	1206
	1269
	1280
	1282
	1286
	1290
	1294
	1330
	1331

STICHWORTVERZEICHNIS

Bezeichnung	Seite
	1332
	1452
	1454
	1456
	1460
STECKDOSEN - EINBAUSATZ (6POLIG)	1211
STECKDOSENDECKEL	506
	508
	512
	516
STEINSCHUTZ	732
	733
STELLUNGSSENSOR	446
	447
	448
	449
	450
	451
	452
STELLUNGSSENSOR (BREMSE)	852
	854
STELLUNGSSENSOR (GASREDUZIERPEDAL)	228
STELLUNGSSENSOR (LENKSTELLUNG)	860
STELLUNGSSENSOR (RICHTUNG)	862
	864
STEUERKNOPF	1280
	1282
STEUERUNG - NICHT PROGRAMMIERT	377
	392
	393
	394
	471
STEUERUNG, ELEKTRON.	381
	382
	383
	860
STEUERUNGSEINHEIT, ELEKTRON. FÜR MOTOR UND BEFEST.	379
	380
STEUERVENTIL	652
	654
	656
	658
	666
	668
	878
	1022
	1024
	1026
	1031
	1032
	1034
	1036
STEUERVENTIL UND BEFESTIGUNGSTEILE	1016
	1017
STIRNRAD	80
STIRNRADGEHÄUSE	92
	93
STIRNRADGEHÄUSEDECKEL	24
STOPFENSATZ (HYDRAULISCHE PUMPENDÜSE)	300
	302
	306
STOSSSTANGEN-EINBAUSATZ	1298
	1302
STRÖMUNGSSCHALTER	7
	9
	11
	500
	501
STÜTZGRUPPE - STEUERUNG	876
SU-SCHILD	1154
	1159
	1160
	1162
	1164

T

Bezeichnung	Seite
TELLERRAD- UND VORGELEGERADSATZ	598
TEMPERATURSCHALTER (NEBENSTROMFILTER)	329
	337
	361
	369
TEMPERATURSCHALTER (NEBENSTROMFILTER)	345
	353
TEMPERATURSENSOR	152
	158
	162
	166
	398
	468
	469
	470
TEMPERATURSENSOR (HYDRAULIKÖL)	346
	354
	362
	370
TEMPERATURSENSOR (KRAFTSTOFF)	264
TEMPERATURSENSOR (KRAFTÜBERTRAGUNGSÖL)	346
TEMPERATURSENSOR (KRAFTÜBERTRAGUNGSÖL)	352
	360
	368

STICHWORTVERZEICHNIS

Bezeichnung	Seite
TEMPERATURSENSOR (KÜHLMITTEL)	154
THERMOSTATSCHALTER	1202
	1206
	1210
TIMERSCHALTER	504
TIMERSCHALTER (VORSCHMIERANLAGE)	136
TRAGROLLEN	802
	803
	804
TRENNSCHALTER	499
TRENNSCHALTER (BATTERIE)	329
	338
	345
	353
	361
	369
TURBOLADER	212
	213
	214
	215
TURBOLADEREINSATZ	212
	215
TURBOLADERÖLLEITUNGEN	130
TÜRFENSTER (LINKS) (ARKTISCHE TEMPERATUREN)	1230
	1232
TÜRFENSTER (RECHTS) (ARKTISCHE TEMPERATUREN)	1230
TÜRFENSTER (RECHTS) (ARKTISCHE TEMPERATUREN)	1232

U

Bezeichnung	Seite
U-SCHILD	1156
	1157
	1158
	1166
	1168
	1170
	1172
ÜBERDRUCKRÜCKSCHLAGVENTIL	1027
ÜBERDRUCKVENTIL	614
	618
	622
	666
	668
	1043
ÜBERHOLSATZ	60
	72
ÜBERROLLSCHUTZ	1363
	1364
	1365
ÜBERROLLSCHUTZAUFLAGER	1337
ÜBERWACHUNGSSYSTEM	1350
ÜBERWACHUNGSSYSTEMDIMMER - STEUERUNG	1269
UMBAUSATZ	2
	3
	1271
UMGEHUNGSSCHALTER	329
	337
	497
	498
UMGEHUNGSSCHALTER (KRAFTANTRIEBS-FILTERDRUCK)	353
UMGEHUNGSSCHALTER (KRAFTÜBERTRA-GUNGSÖLFILTER)	345
UMGEHUNGSVENTIL	998
UMLAUFKÜHLWASSERHEIZUNG	402
	410
	411
	412
UMLAUFKÜHLWASSERHEIZUNGS-ELEMENT	411
	412
UMLAUFKÜHLWASSERHEIZUNGS-ELEMENT (120 V/1500 W)	410
UMLEITVENTIL (NUR FÜR TIEFE UMGEBUNGSTEMPERATUREN)	1036
UNTERBRECHER (10 A)	506
	512
	516
UNTERBRECHER (10 A) (MOTOR STARTEN)	509
	512
	516
UNTERBRECHER (10 A) (SCHLÜSSEL)	508
UNTERBRECHER (10 A) (ZUSATZKREISE)	509
UNTERBRECHER (105 A)	506
UNTERBRECHER (105 A) (DREHSTROMGENE-RATOR)	508
UNTERBRECHER (105 A) (DREHSTROMGENE-RATOR)	516
UNTERBRECHER (105 A) (DREHSTROMGENE-RATOR)	512
UNTERBRECHER (105 A) (HAUPTUNTERBRE-CHER)	508
UNTERBRECHER (105 A) (HAUPTUNTERBRE-CHER)	516
UNTERBRECHER (105 A) (HAUPTUNTERBRE-CHER)	512
UNTERBRECHER (15 A)	152
	506
	512
	516
	1252
	1257
	1260
UNTERBRECHER (15 A) (FRONTSCHEINWER-FER)	512

STICHWORTVERZEICHNIS

Bezeichnung	Seite
	516
UNTERBRECHER (15 A) (LÜFTER)	509
UNTERBRECHER (15 A) (LÜFTERMOTOR)	512
	516
UNTERBRECHER (15 A) (MOTOR)	508
	512
	516
UNTERBRECHER (15 A) (SCHEINWERFER)	508
UNTERBRECHER (15 A) (STROMAUSLASS)	509
	512
	516

V

Bezeichnung	Seite
VENTIL	144
	184
	186
	220
	222
	224
	226
	1020
	1032
	1036
	1038
	1040
	1041
	1211
	1324
VENTIL - SCHALT- UND DRUCKSTEUERUNG	1044
VENTIL (ÄTHERSTARTHILFE)(24 V)	474
VENTIL (DRUCKBEGRENZUNG)	822
	824
	826
	828
	830
	832
	834
VENTIL (ENTLÜFTUNG)	998
VENTIL (LASTHALTEVENTIL)	1026
VENTIL UND ZYLINDER	1000
	1002
	1004
	1006
	1008
	1010
	1012
	1014
	1015
VENTIL UND ZYLINDER (LINKS)	1065
	1066
VENTIL UND ZYLINDER (RECHTS)	1065
	1066
VENTIL (WASSER)	1294
VENTIL (WASSERTANKABLASS)	188
	190
VENTILANORDNUNG	1018
VENTILDECKEL	26
	27
VENTILKIPPHEBEL	105
VENTILSATZ (3-VENTIL)	1020
VENTILSITZEINSATZ (AUSLASS)	42
VENTILSITZEINSATZ (EINLASS)	42
VENTILSTEUERUNG	110
VENTILSTÖSSELSATZ	1298
	1299
	1303
VERBINDERKAPPE	506
	508
VERDRAHTUNG (EINSPRITZEINHEIT)	530
VERDRAHTUNGSSATZ (LUFTGEFEDERTER SITZ)	1410
	1414
VERGLASUNG, LINKS (GETÖNT)	1443
VERGLASUNG, RECHTS (GETÖNT)	1442
VERKLEIDUNG, KLAPPBAR	716
VERRIEGELUNG	741
VERSANDDECKEL	1088
VERSCHLEISSPLATTEN	1183
	1184
VERSTELLBARER SITZ	1362
VERZÖGERUNGSZEITGEBER (24 V)	1261
	1320
VORHÄNGESCHLOSS	218
	248
	250
	262
	308
	312
	477
	481
	694
	700
	704
	708
	736
	896
VORRANGVENTIL	664
VORREINIGER	207
	208
	209
VORSTEUERVENTIL	1038
	1039
VORSTEUERVENTIL (NEIGEN U. KIPPEN)	1039
VORSTEUERVENTIL UND BEFESTIGUNGSTEILE	650
	651
VORWÄRMGERÄT	398

STICHWORTVERZEICHNIS

Bezeichnung	Seite
W	
WARNAUFKLEBER	768, 770, 772, 774, 776, 778, 780
WARNHORN (24 VOLT)(HOCHTON)	328, 336, 344, 352, 360, 368
WARNHORN (24V)(NIEDERTON)	328, 336, 344, 352, 360, 368
WARNHORNKNOPF	522, 527
WARNSCHILD (KETTENSPANNFEDER)	744, 768, 770, 772, 774, 776, 778, 780
WARNSCHILD (KETTENSPANNFEDER)	848
WARNSCHILD (KETTENSPANNFEDERÖL)	768, 770, 772, 774, 776, 778, 780
WARNSCHILD (MOTORKÜHLMITTELHEIZUNG)	398, 402
WARNVORRICHTUNG	315
WASSERABSCHEIDER- U. KRAFTSTOFFILTER	252, 253, 254
WASSERABSCHEIDER UND KRAFTSTOFFILTER	246, 292
WASSERABSCHEIDER UND KRAFTSTOFFILTER (HAUPTELEMENT)	252
WASSERREGELUNG	1270
WASSERTANK	184, 186, 188, 190
WASSERTEMPERATURREGLER	166
WASSERTEMPERATURREGLER (92 GRAD CELSIUS)	158, 162
WASSERVENTIL	1202, 1206, 1286, 1290
WINDEN-ÖLLEITUNGEN	986, 988
WINDENEINBAUSATZ	1102
WINDENGEHÄUSE	1070
WINDENSTEUERUNG	1086
WINDENSTEUERVENTIL	1148
WINDSCHUTZSCHEIBE (ARKTISCHE TEMPERATUREN)	1230, 1232
WISCHERARM	1464
Z	
ZAHNRADPUMPE	634, 636, 637, 638, 991, 992
ZAHNRADVORGELEGE	82, 86
ZEITGEBER	136, 138, 504
ZUGANGSKLAPPE - HYDRAULIKTANKKAPPE	896
ZUGHAKEN	692
ZUGWINDE	1194, 1195
ZUGWINDENSTEUERUNG	1082
ZUSATZANTRIEB	1100
ZUSATZBELEUCHTUNG	427, 428
ZYLINDER (ÄTHER)	474
ZYLINDERAUFHÄNGUNG	1114
ZYLINDERBLOCKSCHRAUBE	100, 101
ZYLINDERKOPF	41, 42, 43, 44, 45, 46, 48, 50

STICHWORTVERZEICHNIS

Bezeichnung	Seite	Bezeichnung	Seite
	52		
	54		
ZYLINDERKOPFSTOPFEN	102		

MACHINE ARRANGEMENT

130-9719 ARCTIC AR—SEALS & COMPONENTS

S/N: 3KR1-UP
AN ATTACHMENT

SMCS-7000 **i01502306**

NOTE	PART NUMBER	QTY	PART NAME 1 2 3 4 5 6 (PRODUCT LEVEL)	SEE PAGE
Y	**110-2780**	2	FINAL DRIVE GP	574
Y	**107-9617**	4	IDLER GP-TRACK	784
Y	**107-9614**	8	ROLLER GP-TRACK-DOUBLE FLANGE	806
			—OR—	
Y	**197-8492**	8	ROLLER GP-TRACK-DOUBLE FLANGE	809
Y	**107-9613**	8	ROLLER GP-TRACK-SINGLE FLANGE	811
			—OR—	
Y	**197-8493**	8	ROLLER GP-TRACK-SINGLE FLANGE	814
	7T-9310	32	PIN AS-CARTRIDGE	
			(EACH INCLUDES)	
	9G-4872	2	STOPPER-RUBBER	
	6Y-0473	2	PLUG-CLEAR	
	9X-7487	2	SEAL AS-SHAFT	

Y-SEPARATE ILLUSTRATION

<END>

133-6442 COLD WEATHER AR—LUBRICANT

S/N: 3KR1-UP
PART OF 130-3867 MACHINE AR-COLD WEATHER
AN ATTACHMENT

SMCS-7000 **i01738801**

NOTE	PART NUMBER	QTY	PART NAME 1 2 3 4 5 6 (PRODUCT LEVEL)	SEE PAGE
Y	**133-6438**	1	BELT TIGHTENER GP	14
			—OR—	
Y	**194-7735**	1	BELT TIGHTENER GP	18
Y	**201-0358**	1	DRIVE GP-FAN (ARTIC)	76
Y	*133-6441*	1	TANK GP-WATER	188

Y-SEPARATE ILLUSTRATION

<END>

134-0126 ELECTRONICS AR-MACHINE

S/N: 3KR1-UP

SMCS-7000 **i01097451**

NOTE	PART NUMBER	QTY	PART NAME 1 2 3 4 5 6 (PRODUCT LEVEL)	SEE PAGE
CY	*145-8934*	1	ELECTRONICS GP-POWER TRAIN (TRANSMISSION/CHASSIS CONTROL)	396

C-CHANGE FROM PREVIOUS TYPE
Y-SEPARATE ILLUSTRATION

<END>

MACHINE ARRANGEMENT

130-3867 MACHINE AR-COLD WEATHER

S/N: 3KR1-UP
FOR USE WITH CAB AND LOW TEMPERATURE STARTING AR
AN ATTACHMENT

SMCS-7000 **i01400443**

NOTE	PART NUMBER	QTY	PART NAME 1 2 3 4 5 6 (PRODUCT LEVEL)	SEE PAGE
Y	*133-6442*	1	COLD WEATHER AR	1
Y	*135-7810*	1	ENGINE AR	8
Y	**135-0743**	1	BAR GP-EQUALIZER	751
			—OR—	
Y	**178-7260**	1	BAR GP-EQUALIZER	758
Y	*109-2377*	1	FASTENER AR-DISCONNECT KEY	397
Y	*1Z-0749*	1	GUARD GP-PIVOT SHAFT	724
Y	*127-8928*	1	PUMP & LINES AR	990
Y	**9C-5986**	1	SEAT GP-SUSPENSION	1394
Y	*133-0771*	1	YOKE GP	112
	9X-9730	4	BATTERY (12 VOLT/DRY)	
	9X-8703	1	FILM-NOTICE (VENT VALVE)	
			(ON RADIATOR RETURN TUBE NEAR THERMOSTAT VENT VALVE)	
	9X-6076	1	FILM-NOTICE	
			(ON LH SIDE OF HOOD IN LINE WITH THERMOSTAT VENT VALVE)	
	8Q-1997	1	PRESCREENER AS	

Y-SEPARATE ILLUSTRATION

<END>

135-0824 MODIFICATION AR

S/N: 3KR1-UP
BULLDOZER-LANDFILL/PROVIDES SLEEVE GUARDED HOSES
PART OF 130-3859 WASTE HANDLING AR
AN ATTACHMENT

SMCS-7000 **i00822018**

NOTE	PART NUMBER	QTY	PART NAME 1 2 3 4 5 6 (PRODUCT LEVEL)	SEE PAGE
I	**135-0822**	1	HOSE AS	
			1.13M LENGTH	
			60 DEGREE COUPLING EACH END	
I	**135-0823**	1	HOSE AS	
			1.2M LENGTH	
			60 DEGREE COUPLING EACH END	
I	**135-1833**	2	HOSE AS	
			77.5CM LENGTH EACH	
			1-60 DEGREE & 1-STRAIGHT COUPLING	

I-SEE HOSE FABRICATION GUIDE

<END>

MACHINE ARRANGEMENT

135-1830 MODIFICATION AR

S/N: 3KR1-UP
BULLDOZER-LANDFILL
FOR USE WITH WASTE DISPOSAL AR, DUAL TILT CYLINDER AR
AN ATTACHMENT

SMCS-7000 **i01473947**

NOTE	PART NUMBER	QTY	PART NAME 1 2 3 4 5 6 (PRODUCT LEVEL)	SEE PAGE
I	**135-1828**	1	HOSE AS	
			1.54M LENGTH	
			1-90 DEGREE & 1-60 DEGREE COUPLING	
I	**135-1829**	1	HOSE AS	
			1.4M LENGTH	
			1-90 DEGREE & 1-60 DEGREE COUPLING	
I	**135-1831**	1	HOSE AS	
			1.14M LENGTH	
			1-90 DEGREE & 1-60 DEGREE COUPLING	
I	**135-1832**	1	HOSE AS	
			1.3M LENGTH	
			1-90 DEGREE & 1-60 DEGREE COUPLING	
I	**135-1833**	2	HOSE AS	
			77.5CM LENGTH EACH	
			1-60 DEGREE & 1 STRAIGHT COUPLING	
I	**135-1834**	2	HOSE AS	
			1.4M LENGTH EACH	
			STRAIGHT COUPLINGS EACH END	
I	**200-2670**	2	HOSE AS	
			1.3M LENGTH EACH	
			1-90 DEGREE & 1 STRAIGHT COUPLING	

I-SEE HOSE FABRICATION GUIDE

<END>

153-1227 SUPPRESSION AR-SOUND

S/N: 3KR1-UP
EEC
FOR USE WITH CAB EQUIPPED MACHINES ONLY. CANNOT BE USED WITH TRACK SHOE WIDTH OVER 760MM (30 IN), 130-3867—PAGE 2
AN ATTACHMENT

SMCS-7000 **i01738831**

NOTE	PART NUMBER	QTY	PART NAME 1 2 3 4 5 6 (PRODUCT LEVEL)	SEE PAGE
Y	**155-0058**	1	ENGINE AR	10
	130-5161	1	FILM	
	130-5100	1	FILM-OPERATOR SOUND	
	082-2817	8	TACK	

Y-SEPARATE ILLUSTRATION

<END>

MACHINE ARRANGEMENT

130-3859 WASTE HANDLING AR

S/N: 3KR1-UP

AN ATTACHMENT

SMCS-7000 **i01738836**

NOTE	PART NUMBER	QTY	PART NAME 1 2 3 4 5 6 (PRODUCT LEVEL)	SEE PAGE
Y	*8Q-1996*	1	AIR CLEANER GP	195
Y	*127-8787*	1	ALTERNATOR AR-CHARGING	316
Y	*130-3860*	1	ARMREST AR	1213
Y	*130-8591*	1	CASE & FRAME GP	682
Y	*130-3864*	1	CONDENSER GP-REFRIGERANT	1268
Y	*130-3863*	1	ENCLOSURE GP-ENGINE	694
Y	*131-5082*	1	FENDER AR (WASTE DISPOSAL)	706
Y	*110-6032*	1	FILM GP	1465
Y	*127-1805*	1	GUARD AR-FINAL DRIVE	714
			—OR—	
Y	*143-7543*	1	GUARD AR-FINAL DRIVE	714
CY	*167-1949*	1	GUARD AR-IDLER	718
Y	*109-7210*	1	GUARD GP-BOTTOM	722
Y	*1Z-0749*	1	GUARD GP-PIVOT SHAFT	724
Y	*131-0401*	1	GUARD GP-RADIATOR	728
Y	*102-4353*	1	IDLER AR-TRACK	782
Y	*102-4394*	1	LIGHTING AR-REAR	424
Y	*135-0824*	1	MODIFICATION AR	2

C-CHANGE FROM PREVIOUS TYPE
Y-SEPARATE ILLUSTRATION

<END>

MEMORANDA

ENGINE ARRANGEMENT

115-7641 ENGINE AR

S/N: 80M1-UP

SMCS-1000 **i01564690**

NOTE	PART NUMBER	QTY	PART NAME 1 2 3 4 5 6 (PRODUCT LEVEL)	SEE PAGE
Y	*128-2313*	1	AFTERCOOLER GP-WATER	192
Y	*108-1553*	1	CAMSHAFT GP	20
Y	*109-0400*	1	CONTROL & MTG GP-ENGINE ELEK	379
			S/N: 80M1-2354	
Y	*162-6823*	1	CONTROL & MTG GP-ENGINE ELEK	380
			S/N: 80M2355-UP	
	208-5804	1	ELECTRONICS GP-ENGINE RATINGS	
Y	**4N-2388**	1	COOLER GP-ENGINE OIL	145
			S/N: 80M1-481	
Y	**8N-0744**	1	COOLER GP-HYDRAULIC OIL	893
			S/N: 80M1-481	
Y	**7C-6460**	1	COOLER GP-TRANSMISSION OIL	546
			S/N: 80M1-481	
Y	*127-3511*	1	COVER GP-CYLINDER BLOCK	21
Y	*4N-6876*	1	COVER GP-FLYWHEEL HOUSING	23
Y	*127-3517*	1	COVER GP-FRONT HOUSING	24
Y	*127-3515*	1	COVER GP-VALVE MECHANISM	26
			S/N: 80M1-862	
Y	*138-4125*	1	COVER GP-VALVE MECHANISM	27
			S/N: 80M863-UP	
Y	*4N-0922*	1	CRANKSHAFT GP	28
			S/N: 80M1-3731	
Y	*190-7653*	1	CRANKSHAFT GP	32
			S/N: 80M3732-UP	
YR	*109-9010*	1	CYLINDER BLOCK GP	38
Y	*127-3513*	1	CYLINDER HEAD GP	48
Y	*6N-2229*	1	DAMPER GP	56
Y	*125-3431*	1	DRIVE GP-UNIT INJ HYD PUMP	236
Y	*4N-2481*	1	FASTENER GP-OIL PUMP MOUNTING	113
Y	*127-9374*	1	FILLER GP-ENGINE OIL	114
Y	*128-0948*	1	FILTER GP-OIL	550
Y	*6N-1350*	1	FLYWHEEL GP	78
Y	*128-0947*	1	GAUGE GP-OIL LEVEL (DIPSTICK)	118
Y	*127-3516*	1	GEAR GP-FRONT	80
Y	*8N-0614*	1	GEAR GP-REAR	82
Y	*128-2982*	1	HOUSING GP-FLYWHEEL	90
Y	*127-3514*	1	HOUSING GP-FRONT	92
Y	*126-2267*	1	LIFTING GP-ENGINE	94
Y	*127-6993*	1	LINES GP-AIR	200
Y	*7C-4485*	1	LINES GP-ENGINE OIL	120
Y	*128-5107*	1	LINES GP-FUEL FILTER	264
Y	*121-4034*	1	LINES GP-INJECTOR HYD PUMP	268
Y	*128-4332*	1	LINES GP-TURBOCHARGER OIL	130
Y	*117-8621*	1	LINES GP-WATER	158
			S/N: 80M1-481	
Y	*128-5108*	1	LINES GP-WATER (TURBOCHARGER)	161
Y	*110-3020*	1	LINES GP-WATER (AFTERCOOLER)	156
			S/N: 80M1-481	
Y	*135-3703*	1	LINES GP-WATER	162
			S/N: 80M482-UP	
Y	*135-3704*	1	COOLER GP-HYDRAULIC OIL (AFTERCOOLER)	894
			S/N: 80M482-UP	
Y	*128-5109*	1	MAGNETIC PICKUP GP	443
Y	*127-5134*	1	MANIFOLD GP-EXHAUST	204
			S/N: 80M1-3509	
Y	*179-7024*	1	MANIFOLD GP-EXHAUST	205
			S/N: 80M3510-UP	

ENGINE ARRANGEMENT

115-7641 ENGINE AR *(contd.)* i01564690

NOTE	PART NUMBER	QTY	PART NAME 1 2 3 4 5 6 (PRODUCT LEVEL)	SEE PAGE
Y	*7C-5017*	1	PAN GP-OIL	96
Y	*109-2823*	12	PISTON & ROD GP	98
			S/N: 80M1-3849	
Y	*192-8808*	12	PISTON & ROD GP	99
			S/N: 80M3850-UP	
Y	*127-3512*	1	PLUG GP-CYLINDER BLOCK	100
			S/N: 80M1-353	
Y	*135-9980*	1	PLUG GP-CYLINDER BLOCK	101
			S/N: 80M354-UP	
Y	*124-4456*	1	PLUG GP-CYLINDER HEAD	102
Y	*126-7292*	1	PUMP & MTG GP-UNIT INJ HYD	270
YR	**7C-1772**	1	PUMP GP-ENGINE OIL	140
Y	*108-7090*	12	PUMP GP-FUEL INJECTION	286
			S/N: 80M1-4651	
Y	*206-2630*	12	PUMP GP-FUEL INJECTION	290
			S/N: 80M4652-UP	
Y	*4N-5837*	1	PUMP GP-WATER	169
Y	*6N-1378*	1	SUPPORT GP-ENGINE	107
Y	*100-4417*	1	SWITCH GP-FLOW	500
Y	*7N-1346*	1	TRUNNION GP-ENGINE	108
Y	*127-9813*	1	TURBOCHARGER GP	213
Y	*108-1874*	1	VALVE MECHANISM GP	110
Y	*120-9750*	1	WIRING GP-ENGINE	520
Y	*109-0401*	6	WIRING GP-UNIT INJECTOR	530
			AVAILABLE GASKET KIT(S):	
	138-4037		KIT-GASKET (AFTERCOOLER & LINES)	
	138-4038		KIT-GASKET (CENTRAL & LOWER STRUCTURE)	
	138-4040		KIT-GASKET (FRONT STRUCTURE)	
	138-4039		KIT-GASKET (FUEL SYSTEM)	
	152-4055		KIT-GASKET (MULTIPLE CYLINDER HEAD)	
	138-4042		KIT-GASKET (OIL COOLER & LINES)	
	138-3622		KIT-GASKET (OIL LINES)	
	178-2972		KIT-GASKET (REAR STRUCTURE)	
	138-4044		KIT-GASKET (SINGLE CYLINDER HEAD)	
	160-9874		KIT-GASKET (SINGLE CYLINDER LINER)	
	138-4045		KIT-GASKET (TURBOCHARGER)	
	138-4046		KIT-GASKET (WATER LINES GROUP)	
	140-2749		KIT-GASKET (WATER PUMP)	

R-REMFG PART MAY BE AVAILABLE
Y-SEPARATE ILLUSTRATION

ENGINE ARRANGEMENT

135-7810 ENGINE AR

S/N: 80M1-UP
PART OF 130-3867 MACHINE AR-COLD WEATHER
AN ATTACHMENT

SMCS-1000 **i01564861**

NOTE	PART NUMBER	QTY	PART NAME 1 2 3 4 5 6 (PRODUCT LEVEL)	SEE PAGE
Y	*128-2313*	1	AFTERCOOLER GP-WATER	192
Y	*108-1553*	1	CAMSHAFT GP	20
Y	*109-0400*	1	CONTROL & MTG GP-ENGINE ELEK	379
			S/N: 80M1-2354	
Y	*162-6823*	1	CONTROL & MTG GP-ENGINE ELEK	380
			S/N: 80M2355-UP	
	208-5804	1	ELECTRONICS GP-ENGINE RATINGS	
Y	*137-1788*	1	COVER GP-CYLINDER BLOCK	22
Y	*4N-6876*	1	COVER GP-FLYWHEEL HOUSING	23
			S/N: 80M1-673	
Y	*127-3517*	1	COVER GP-FRONT HOUSING	24
Y	*127-3515*	1	COVER GP-VALVE MECHANISM	26
			S/N: 80M1-862	
Y	*138-4125*	1	COVER GP-VALVE MECHANISM	27
			S/N: 80M863-UP	
Y	*4N-0922*	1	CRANKSHAFT GP	28
			S/N: 80M1-4651	
Y	*190-7653*	1	CRANKSHAFT GP	32
			S/N: 80M4652-UP	
YR	*109-9010*	1	CYLINDER BLOCK GP	38
Y	*127-3513*	1	CYLINDER HEAD GP	48
Y	*6N-2229*	1	DAMPER GP	56
Y	*125-3431*	1	DRIVE GP-UNIT INJ HYD PUMP	236
Y	*4N-2481*	1	FASTENER GP-OIL PUMP MOUNTING	113
Y	*127-9374*	1	FILLER GP-ENGINE OIL	114
Y	*128-0948*	1	FILTER GP-OIL	550
Y	*6N-1350*	1	FLYWHEEL GP	78
Y	*128-0947*	1	GAUGE GP-OIL LEVEL (DIPSTICK)	118
Y	*127-3516*	1	GEAR GP-FRONT	80
Y	*8N-0614*	1	GEAR GP-REAR	82
			S/N: 80M1-673	
Y	*138-4123*	1	GEAR GP-REAR	86
			S/N: 80M674-UP	
Y	*128-2982*	1	HOUSING GP-FLYWHEEL	90
Y	*127-3514*	1	HOUSING GP-FRONT	92
Y	*126-2267*	1	LIFTING GP-ENGINE	94
Y	*127-6993*	1	LINES GP-AIR	200
Y	*7C-4485*	1	LINES GP-ENGINE OIL	120
Y	*128-5107*	1	LINES GP-FUEL FILTER	264
Y	*121-4034*	1	LINES GP-INJECTOR HYD PUMP	268
Y	*128-4332*	1	LINES GP-TURBOCHARGER OIL	130
Y	*128-5108*	1	LINES GP-WATER	161
Y	*135-3704*	1	COOLER GP-HYDRAULIC OIL	894
Y	*137-1789*	1	LINES GP-WATER	166
Y	*128-5109*	1	MAGNETIC PICKUP GP	443
Y	*127-5134*	1	MANIFOLD GP-EXHAUST	204
			S/N: 80M1-3513	
Y	*179-7024*	1	MANIFOLD GP-EXHAUST	205
			S/N: 80M3514-UP	
Y	*7C-5017*	1	PAN GP-OIL	96
Y	*109-2823*	12	PISTON & ROD GP	98
			S/N: 80M1-3849	
Y	*192-8808*	12	PISTON & ROD GP	99
			S/N: 80M3850-UP	
Y	*135-9980*	1	PLUG GP-CYLINDER BLOCK	101

135-7810 ENGINE AR *(contd.)*

i01564861

NOTE	PART NUMBER	QTY	PART NAME 1 2 3 4 5 6 (PRODUCT LEVEL)	SEE PAGE
Y	*124-4456*	1	PLUG GP-CYLINDER HEAD	102
Y	*126-7292*	1	PUMP & MTG GP-UNIT INJ HYD	270
YR	**7C-1772**	1	PUMP GP-ENGINE OIL	140
Y	*108-7090*	12	PUMP GP-FUEL INJECTION	286
			S/N: 80M1-4651	
Y	*206-2630*	12	PUMP GP-FUEL INJECTION	290
			S/N: 80M4652-UP	
Y	*4N-5837*	1	PUMP GP-WATER	169
Y	*6N-1378*	1	SUPPORT GP-ENGINE	107
Y	*100-4417*	1	SWITCH GP-FLOW	500
Y	*7N-1346*	1	TRUNNION GP-ENGINE	108
Y	*127-9813*	1	TURBOCHARGER GP	213
Y	*108-1874*	1	VALVE MECHANISM GP	110
Y	*120-9750*	1	WIRING GP-ENGINE	520
Y	*109-0401*	6	WIRING GP-UNIT INJECTOR	530
			GASKET KITS WILL BE PROVIDED WHEN AVAILABLE	

R-REMFG PART MAY BE AVAILABLE
Y-SEPARATE ILLUSTRATION

ENGINE ARRANGEMENT

155-0058 ENGINE AR

S/N: 80M1813-UP
PART OF 153-1227, 180-6632 SUPPRESSION AR-SOUND
AN ATTACHMENT

SMCS-1000 **i01564631**

NOTE	PART NUMBER	QTY	PART NAME 1 2 3 4 5 6 (PRODUCT LEVEL)	SEE PAGE
Y	*128-2313*	1	AFTERCOOLER GP-WATER	192
Y	*108-1553*	1	CAMSHAFT GP	20
Y	*109-0400*	1	CONTROL & MTG GP-ENGINE ELEK	379
			S/N: 80M1813-3513	
Y	*162-6823*	1	CONTROL & MTG GP-ENGINE ELEK	380
			S/N: 80M3514-UP	
	208-5807	1	ELECTRONICS GP-ENGINE RATINGS	
Y	*127-3511*	1	COVER GP-CYLINDER BLOCK	21
Y	*4N-6876*	1	COVER GP-FLYWHEEL HOUSING	23
Y	*127-3517*	1	COVER GP-FRONT HOUSING	24
Y	*138-4125*	1	COVER GP-VALVE MECHANISM	27
Y	*4N-0922*	1	CRANKSHAFT GP	28
			S/N: 80M1813-4651	
Y	*190-7653*	1	CRANKSHAFT GP	32
			S/N: 80M4652-UP	
YR	*109-9010*	1	CYLINDER BLOCK GP	38
Y	*127-3513*	1	CYLINDER HEAD GP	48
Y	*6N-2229*	1	DAMPER GP	56
Y	*125-3431*	1	DRIVE GP-UNIT INJ HYD PUMP	236
Y	*4N-2481*	1	FASTENER GP-OIL PUMP MOUNTING	113
Y	*127-9374*	1	FILLER GP-ENGINE OIL	114
Y	*128-0948*	1	FILTER GP-OIL	550
Y	*6N-1350*	1	FLYWHEEL GP	78
Y	*128-0947*	1	GAUGE GP-OIL LEVEL (DIPSTICK)	118
Y	*127-3516*	1	GEAR GP-FRONT	80
Y	*8N-0614*	1	GEAR GP-REAR	82
Y	*128-2982*	1	HOUSING GP-FLYWHEEL	90
Y	*127-3514*	1	HOUSING GP-FRONT	92
Y	*126-2267*	1	LIFTING GP-ENGINE	94
Y	*127-6993*	1	LINES GP-AIR	200
Y	*7C-4485*	1	LINES GP-ENGINE OIL	120
Y	*128-5107*	1	LINES GP-FUEL FILTER	264
Y	*121-4034*	1	LINES GP-INJECTOR HYD PUMP	268
Y	*128-4332*	1	LINES GP-TURBOCHARGER OIL	130
Y	*128-5108*	1	LINES GP-WATER	161
Y	*135-3703*	1	LINES GP-WATER	162
Y	*135-3704*	1	COOLER GP-HYDRAULIC OIL	894
Y	*128-5109*	1	MAGNETIC PICKUP GP	443
Y	*127-5134*	1	MANIFOLD GP-EXHAUST	204
			S/N: 80M1813-3513	
Y	*179-7024*	1	MANIFOLD GP-EXHAUST	205
			S/N: 80M3514-UP	
Y	*7C-5017*	1	PAN GP-OIL	96
Y	*109-2823*	12	PISTON & ROD GP	98
			S/N: 80M1813-3973	
Y	*192-8808*	12	PISTON & ROD GP	99
			S/N: 80M3974-UP	
Y	*135-9980*	1	PLUG GP-CYLINDER BLOCK	101
Y	*124-4456*	1	PLUG GP-CYLINDER HEAD	102
Y	*126-7292*	1	PUMP & MTG GP-UNIT INJ HYD	270
YR	**7C-1772**	1	PUMP GP-ENGINE OIL	140
Y	*108-7090*	12	PUMP GP-FUEL INJECTION	286
			S/N: 80M1813-4651	
Y	*206-2630*	12	PUMP GP-FUEL INJECTION	290
			S/N: 80M4652-UP	

155-0058 ENGINE AR *(contd.)*

i01564631

NOTE	PART NUMBER	QTY	PART NAME 1 2 3 4 5 6 (PRODUCT LEVEL)	SEE PAGE
Y	*4N-5837*	1	PUMP GP-WATER	169
Y	*6N-1378*	1	SUPPORT GP-ENGINE	107
Y	*100-4417*	1	SWITCH GP-FLOW	500
Y	*7N-1346*	1	TRUNNION GP-ENGINE	108
Y	*127-9813*	1	TURBOCHARGER GP	213
Y	*108-1874*	1	VALVE MECHANISM GP	110
Y	*120-9750*	1	WIRING GP-ENGINE	520
Y	*109-0401*	6	WIRING GP-UNIT INJECTOR	530
			GASKET KITS WILL BE PROVIDED WHEN AVAILABLE	

R-REMFG PART MAY BE AVAILABLE
Y-SEPARATE ILLUSTRATION

BASIC ENGINE

4P-1759 BELT TIGHTENER GP

S/N: 3KR1-402

SMCS-1358 **i01400183**

NOTE	REF NO	GRAPHIC REF	PART NUMBER	QTY	PART NAME 1 2 3 4 5 6 (PRODUCT LEVEL)	SEE PAGE
	1	1	**9S-1315**	1	PIN-CLEVIS	
	2	1	**3B-4617**	2	COTTER	
	3	1	**8N-5827**	1	ABSORBER AS	
	4	1	**6S-6308**	1	PIN	
	5	1	**8L-5008**	1	ELBOW-PIPE (45 DEG)	
	6	1	**4L-6454**	1	BOLT (3/8-16X1 IN)	
	7	1	**8T-4896**	2	WASHER-HARD (10.2X18.5X2.5MM THK)	
	8	1	**4M-6425**	4	BOLT (5/16-18X1 IN)	
	9	1	**0S-0509**	1	BOLT (3/8-16X.75 IN)	
	10	1	**2S-6160**	1	WASHER-HARD (10.2X32X5MM THK)	
	11	1	**2S-6150**	1	COVER-PULLEY	
	12	1	**8B-2327**	1	RING-RETAINING	
	13	1	**1S-8687**	1	SPACER	
	14	1	**6B-1124**	2	BALL BEARING	
	15	1	**5M-9735**	1	SEAL-LIP	
	16	1	**6N-1186**	1	PULLEY	
	17	1	**2S-6151**	1	GASKET	
	18	1	**2M-2742**	1	PLATE-RETAINER	
	19	1	**7W-1659**	1	ARM AS-TIGHTENER	
		1	**3H-0703**	1	DOWEL	
	20	1	**2S-9006**	1	SHAFT-PULLEY	
	21	1	**4S-5367**	1	BUSHING AS	
	22	1	**2V-0460**	1	HOSE AS	
	23	1	**3B-8485**	1	FITTING-GREASE	
	24	1	**5P-9297**	2	CLIP	

4P-1759 **BELT TIGHTENER GP** *(contd.)* **i01400183**

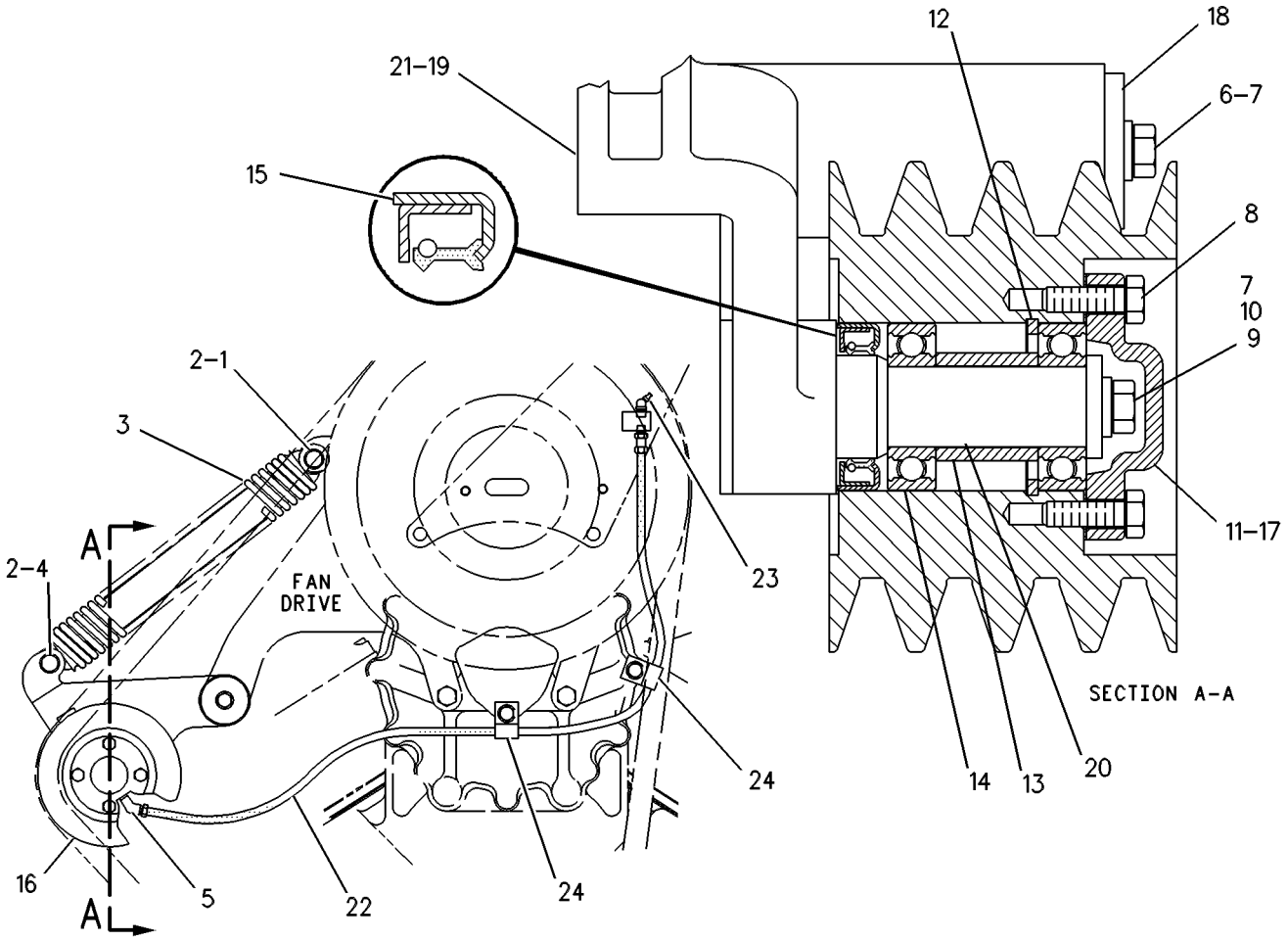

GRAPHIC #1 g00253502

BASIC ENGINE

133-6438 BELT TIGHTENER GP

S/N: 3KR1-UP
PART OF 133-6442 COLD WEATHER AR
AN ATTACHMENT

SMCS-1358 **i01400186**

NOTE	REF NO	GRAPHIC REF	PART NUMBER	QTY	PART NAME 1 2 3 4 5 6 (PRODUCT LEVEL)	SEE PAGE
	1	1	**1J-1971**	1	PIN-CLEVIS	
	2	1	**3B-4617**	2	COTTER	
	3	1	**161-7128**	1	SPRING AS	
	3A	1	**7I-1334**	1	HOSE	
	3B	1	**159-7623**	1	SPRING AS	
	4	1	**6S-6308**	1	PIN	
	5	1	**8L-5008**	1	ELBOW-PIPE (45 DEG)	
	6	1	**4L-6454**	1	BOLT (3/8-16X1 IN)	
	7	1	**8T-4896**	2	WASHER-HARD (10.2X18.5X2.5MM THK)	
	8	1	**4M-6425**	4	BOLT (5/16-18X1 IN)	
	9	1	**0S-0509**	1	BOLT (3/8-16X.75 IN)	
	10	1	**2S-6160**	1	WASHER-HARD (10.2X32X5MM THK)	
	11	1	**2S-6150**	1	COVER-PULLEY	
	12	1	**8B-2327**	1	RING-RETAINING	
	13	1	**1S-8687**	1	SPACER	
	14	1	**6B-1124**	2	BALL BEARING	
	15	1	**5M-9735**	1	SEAL-LIP	
	16	1	**6N-1186**	1	PULLEY	
	17	1	**2S-6151**	1	GASKET	
	18	1	**2M-2742**	1	PLATE-RETAINER	
	19	1	**7W-1659**	1	ARM AS-TIGHTENER	
	19A	1	**3H-0703**	1	DOWEL	
	19B	1	**2S-9006**	1	SHAFT-PULLEY	
	19C	1	**4S-5367**	1	BUSHING AS	
	20	1	**2V-0460**	1	HOSE AS	
	21	1	**3B-8485**	1	FITTING-GREASE	
	22	1	**5P-9297**	2	CLIP	
	23	1	**142-0044**	2	SLEEVE	
	24	1	**5P-8245**	2	WASHER-HARD (13.5X25.5X3MM THK)	

133-6438 **BELT TIGHTENER GP** *(contd.)* **i01400186**

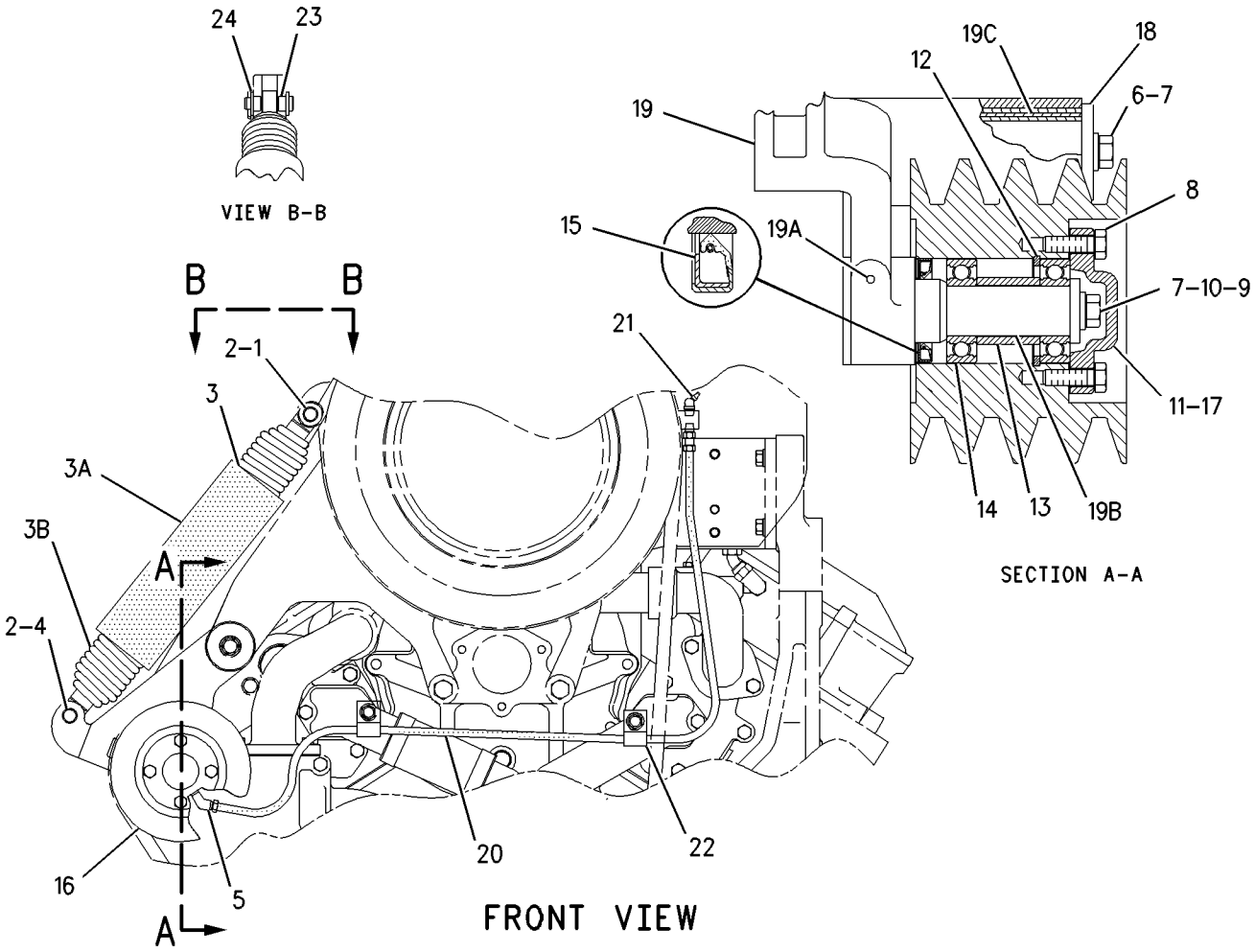

GRAPHIC #1 g00737791

BASIC ENGINE

135-0327 BELT TIGHTENER GP

S/N: 3KR403-1604

SMCS-1358 **i01400248**

NOTE	REF NO	GRAPHIC REF	PART NUMBER	QTY	PART NAME 1 2 3 4 5 6 (PRODUCT LEVEL)	SEE PAGE
	1	1	**9S-1315**	1	PIN-CLEVIS	
	2	1	**3B-4617**	2	COTTER	
	3	1	**8N-5827**	1	ABSORBER AS	
	4	1	**6S-6308**	1	PIN	
	5	1	**8R-7699**	1	HOSE AS	
	6	1	**4L-6454**	1	BOLT (3/8-16X1 IN)	
	7	1	**8T-4896**	2	WASHER-HARD (10.2X18.5X2.5MM THK)	
	8	1	**4M-6425**	4	BOLT (5/16-18X1 IN)	
	9	1	**0S-0509**	1	BOLT (3/8-16X.75 IN)	
	10	1	**2S-6160**	1	WASHER-HARD (10.2X32X5MM THK)	
	11	1	**2S-6150**	1	COVER-PULLEY	
	12	1	**8B-2327**	1	RING-RETAINING	
	13	1	**1S-8687**	1	SPACER	
	14	1	**6B-1124**	2	BALL BEARING	
	15	1	**5M-9735**	1	SEAL-LIP	
	16	1	**6N-1186**	1	PULLEY	
	17	1	**7W-1659**	1	ARM AS-TIGHTENER	
		1	**2S-9006**	1	SHAFT-PULLEY	
		1	**3H-0703**	1	DOWEL	
		1	**4S-5367**	1	BUSHING AS	
	18	1	**2M-2742**	1	PLATE-RETAINER	
	19	1	**5P-9297**	3	CLIP	
	20	1	**2S-6151**	1	GASKET	
	21	1	**3B-8485**	1	FITTING-GREASE	
	22	1	**8L-5008**	1	ELBOW-PIPE (45 DEG)	

135-0327 **BELT TIGHTENER GP** *(contd.)* **i01400248**

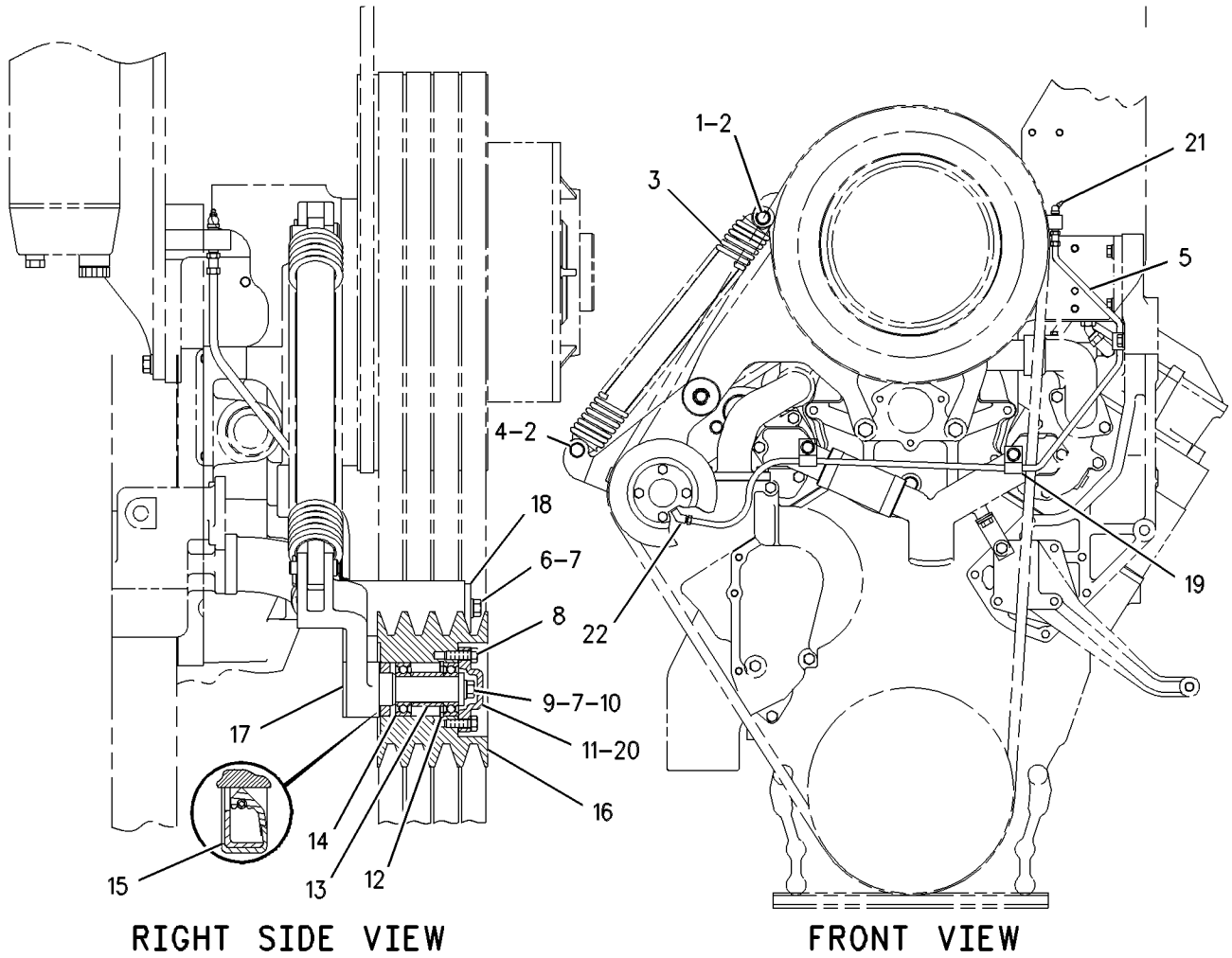

GRAPHIC #1 g00609931

BASIC ENGINE

194-7735 BELT TIGHTENER GP

S/N: 3KR1-UP
PART OF 133-6442 COLD WEATHER AR
AN ATTACHMENT

SMCS-1358 **i01480752**

NOTE	REF NO	GRAPHIC REF	PART NUMBER	QTY	PART NAME 1 2 3 4 5 6 (PRODUCT LEVEL)	SEE PAGE
	1	1	**2M-2742**	1	PLATE-RETAINER	
	2	1	**2S-6150**	1	COVER-PULLEY	
	3	1	**3B-8485**	1	FITTING-GREASE	
	4	1	**6N-1186**	1	PULLEY	
	5	1	**8B-2327**	1	RING-RETAINING	
	6	1	**8R-7699**	1	HOSE AS	
	7	1	**191-4959**	1	ARM AS	
		1	**2S-9006**	1	SHAFT-PULLEY	
		1	**3H-0703**	1	DOWEL	
		1	**4S-5367**	1	BUSHING AS	
	8	1	**198-3137**	1	PIN-CLEVIS	
	9	1	**198-3138**	1	PIN-CLEVIS	
	10	1	**201-0357**	2	ABSORBER AS-SHOCK	
	11	1	**0S-0509**	1	BOLT (3/8-16X0.75 IN)	
	12	1	**1S-8687**	1	SPACER	
	13	1	**2S-6151**	1	GASKET	
	14	1	**2S-6160**	1	WASHER-HARD (10.2X32X5MM THK)	
	15	1	**3B-4617**	2	PIN-COTTER	
	16	1	**4L-6454**	1	BOLT (3/8-16X1 IN)	
	17	1	**4M-6425**	4	BOLT (5/16-18X1 IN)	
	18	1	**5M-9735**	1	SEAL-LIP	
	19	1	**5P-9297**	3	CLIP	
	20	1	**6B-1124**	2	BALL BEARING	
	21	1	**8L-5008**	1	ELBOW-PIPE	
	22	1	**8T-4896**	2	WASHER-HARD (10.2X18.5X2.5MM THK)	

194-7735 **BELT TIGHTENER GP** *(contd.)* **i01480752**

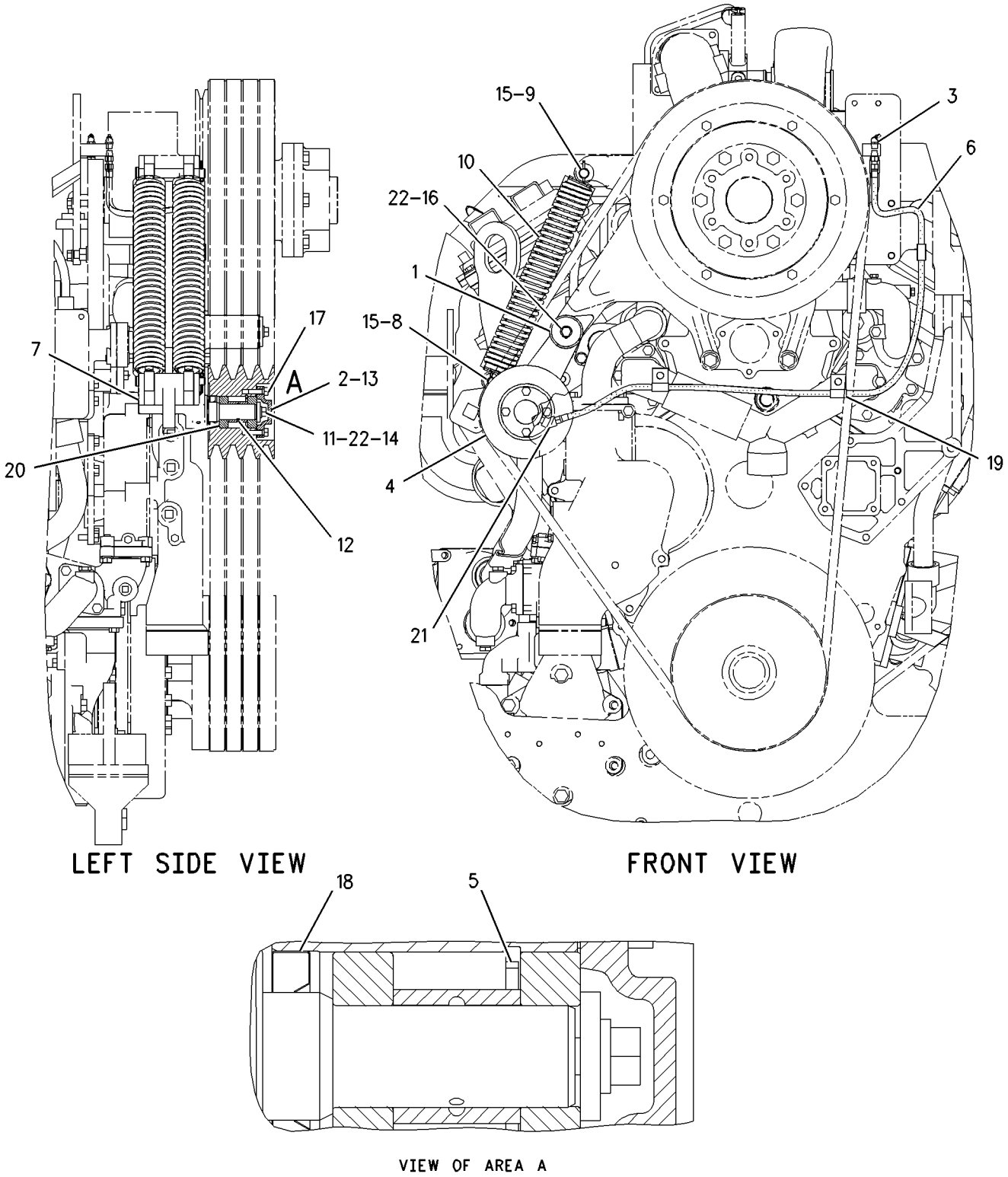

GRAPHIC #1 g00804782

BASIC ENGINE

108-1553 CAMSHAFT GP

S/N: 80M1-UP
PART OF 115-7641, 135-7810, 155-0058 ENGINE AR
ALSO AN ATTACHMENT

SMCS-1210, 1211, 1212 **i00094924**

NOTE	REF NO	GRAPHIC REF	PART NUMBER	QTY	PART NAME 1 2 3 4 5 6 (PRODUCT LEVEL)	SEE PAGE
	1	1	**4N-0342**	1	PLATE-CAMSHAFT THRUST	
	2	1	**0S-0509**	2	BOLT (3/8-16X.75IN)	
	3	1	**108-6278**	1	CAMSHAFT AS	
	4	1	**101-3374**	1	GEAR-CAMSHAFT DRIVE (86 TEETH)	
	5	1	**1B-8705**	1	KEY-WOODRUFF	

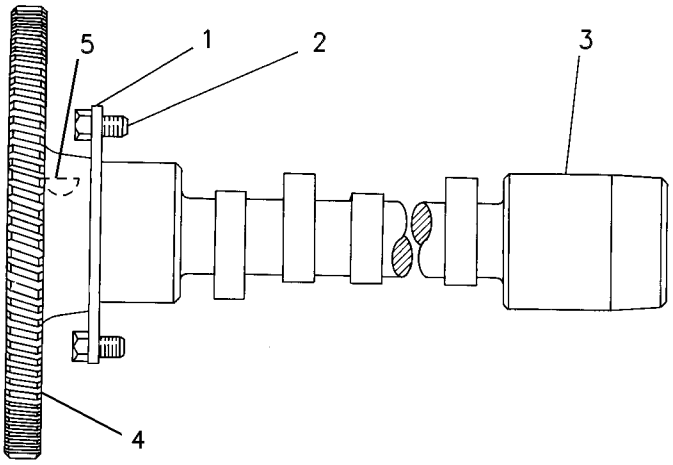

GRAPHIC #1 g00086422

BASIC ENGINE

127-3511 COVER GP-CYLINDER BLOCK

S/N: 80M1-UP
PART OF 115-7641, 155-0058 ENGINE AR
ALSO AN ATTACHMENT

SMCS-1201 **i01738940**

NOTE	REF NO	GRAPHIC REF	PART NUMBER	QTY	PART NAME 1 2 3 4 5 6 (PRODUCT LEVEL)	SEE PAGE
	1	1	**0S-1594**	6	BOLT (3/8-16X1 IN)	
	2	1	**5M-2894**	9	WASHER-HARD (10.2X18.5X2.5MM THK)	
	3	1	**4N-1682**	1	COVER	
	4	1	**4N-0864**	1	GASKET	
	5	1	**123-9052**	1	COVER	
	6	1	**4N-1684**	1	GASKET	
	7	1	**0S-1588**	3	BOLT (3/8-16X1.25 IN)	
	8	1	**9S-4185**	1	PLUG	
	9	1	**8L-2786**	1	SEAL-O-RING	

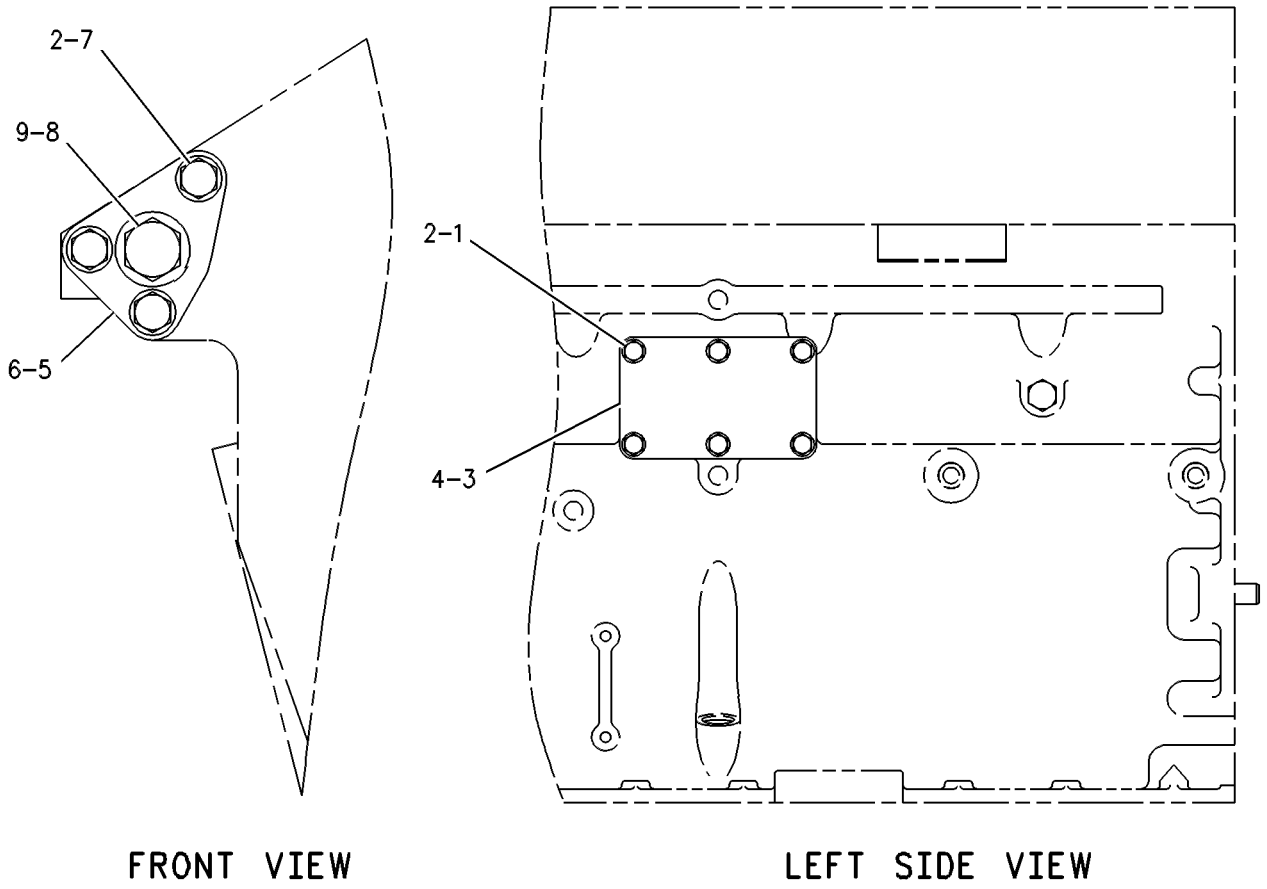

GRAPHIC #1 g00253330

BASIC ENGINE

137-1788 COVER GP-CYLINDER BLOCK

S/N: 80M1-UP
PART OF 135-7810 ENGINE AR
AN ATTACHMENT

SMCS-1201 **i01738971**

NOTE	REF NO	GRAPHIC REF	PART NUMBER	QTY	PART NAME 1 2 3 4 5 6 (PRODUCT LEVEL)	SEE PAGE
	1	1	**0S-1594**	1	BOLT (3/8-16X1 IN)	
	2	1	**5M-2894**	3	WASHER-HARD (10.2X18.5X2.5MM THK)	
	3	1	**130-7439**	1	ADAPTER AS	
	4	1	**4N-0864**	1	GASKET	
	5	1	**123-9052**	1	COVER	
	6	1	**4N-1684**	1	GASKET	
	7	1	**0S-1588**	3	BOLT (3/8-16X1.25 IN)	
	8	1	**9S-4185**	1	PLUG	
	9	1	**8L-2786**	1	SEAL-O-RING	
	10	1	**0S-1619**	5	BOLT (3/8-16X3 IN)	
	11	1	**8T-6761**	1	PLUG-PIPE	

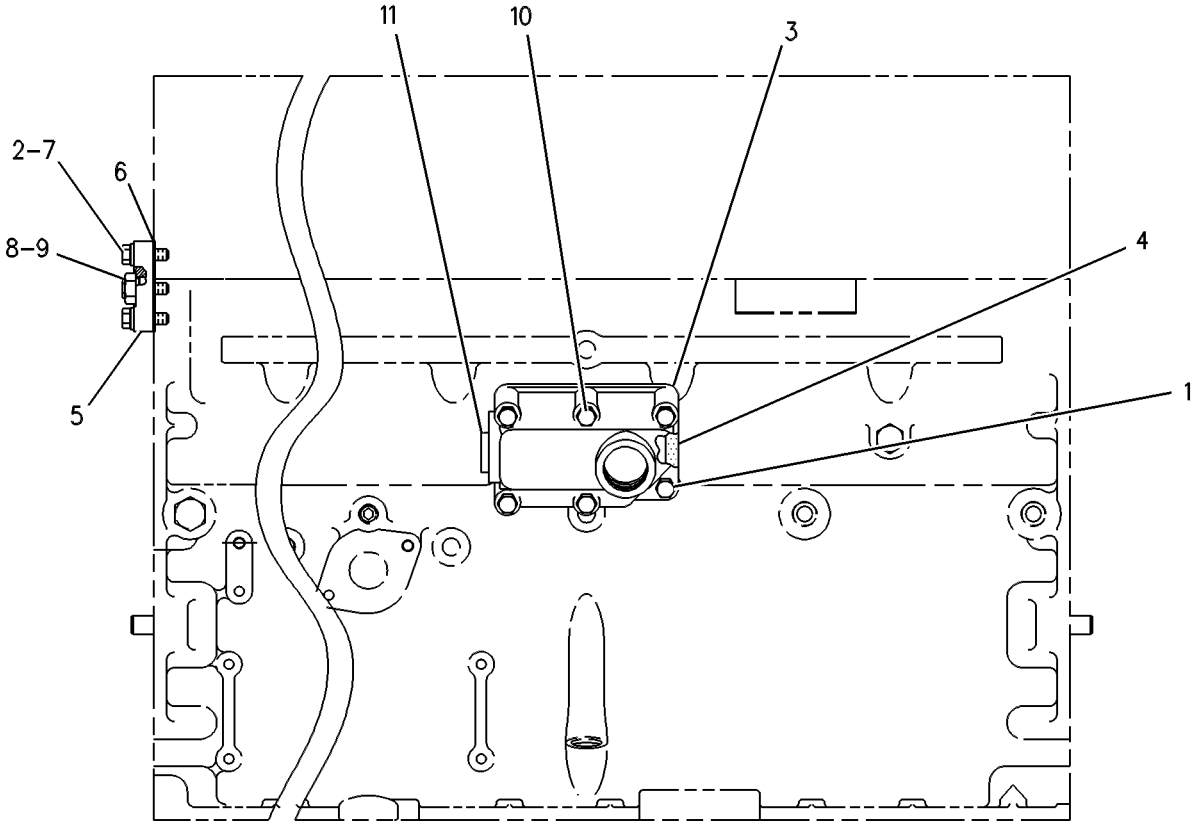

LEFT SIDE VIEW

GRAPHIC #1 g00276107

BASIC ENGINE

4N-6876 COVER GP-FLYWHEEL HOUSING

S/N: 80M1-UP
PART OF 115-7641, 135-7810, 155-0058 ENGINE AR
ALSO AN ATTACHMENT

SMCS-1157 **i01446334**

NOTE	REF NO	GRAPHIC REF	PART NUMBER	QTY	PART NAME 1 2 3 4 5 6 (PRODUCT LEVEL)	SEE PAGE
	1	1	**4N-1114**	1	COVER	
		1	**9Y-6089**	1	GASKET	
	2	1	**0S-1566**	3	BOLT (5/8-11X1.5 IN)	
		1	**5P-8247**	3	WASHER-HARD (17X32X3.5MM THK)	

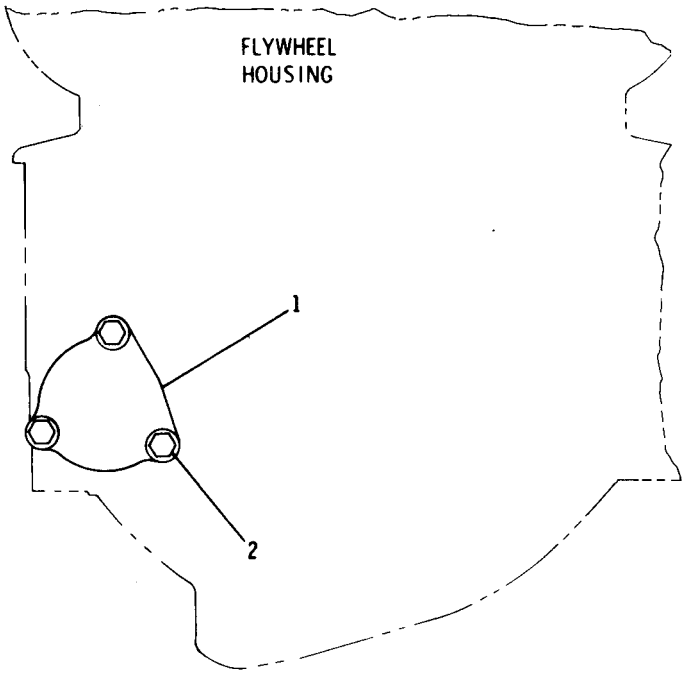

GRAPHIC #1 g00082168

BASIC ENGINE

127-3517 COVER GP-FRONT HOUSING

S/N: 80M1-UP

PART OF 115-7641, 135-7810, 155-0058 ENGINE AR

ALSO AN ATTACHMENT

SMCS-1151, 1162, 1166 **i01739010**

NOTE	REF NO	GRAPHIC REF	PART NUMBER	QTY	PART NAME 1 2 3 4 5 6 (PRODUCT LEVEL)	SEE PAGE
	1	1	**4F-0411**	4	BOLT (3/8-16X6.5 IN)	
	2	1	**0T-0055**	4	BOLT (3/8-16X4.25 IN)	
	3	1	**6N-2509**	1	COVER	
	4	1	**6N-2508**	1	GASKET	
	5	1	**135-9880**	1	COVER	
	6	1	**127-8953**	1	PLATE-FAN SUPPORT	
	7	1	**6B-7254**	1	STUD	
B	8	1	**1U-8846**		SEALANT-GASKET	
	9	1	**0S-1590**	2	BOLT (3/8-16X2 IN)	
	10	1	**133-3867**	1	BRACKET AS	
	11	1	**133-3868**	1	BRACKET AS	
	12	1	**0S-1594**	3	BOLT (3/8-16X1 IN)	
	13	1	**5M-2894**	6	WASHER-HARD (10.2X18.5X2.5MM THK)	
	14	1	**9S-8752**	4	NUT-FULL (3/8-16 THD)	
	15	1	**0S-1591**	4	BOLT (3/8-16X1.5 IN)	
	16	1	**2M-2488**	1	STUD-TAPERLOCK	
	17	1	**0S-1588**	4	BOLT (3/8-16X1.25 IN)	
	18	1	**9X-6458**	8	WASHER-HARD (10.2X22.5X3MM THK)	
	19	1	**9S-4190**	1	PLUG	
	20	1	**6V-4589**	1	SEAL-O-RING	

B-USE AS REQUIRED

127-3517 **COVER GP-FRONT HOUSING** *(contd.)* **i01739010**

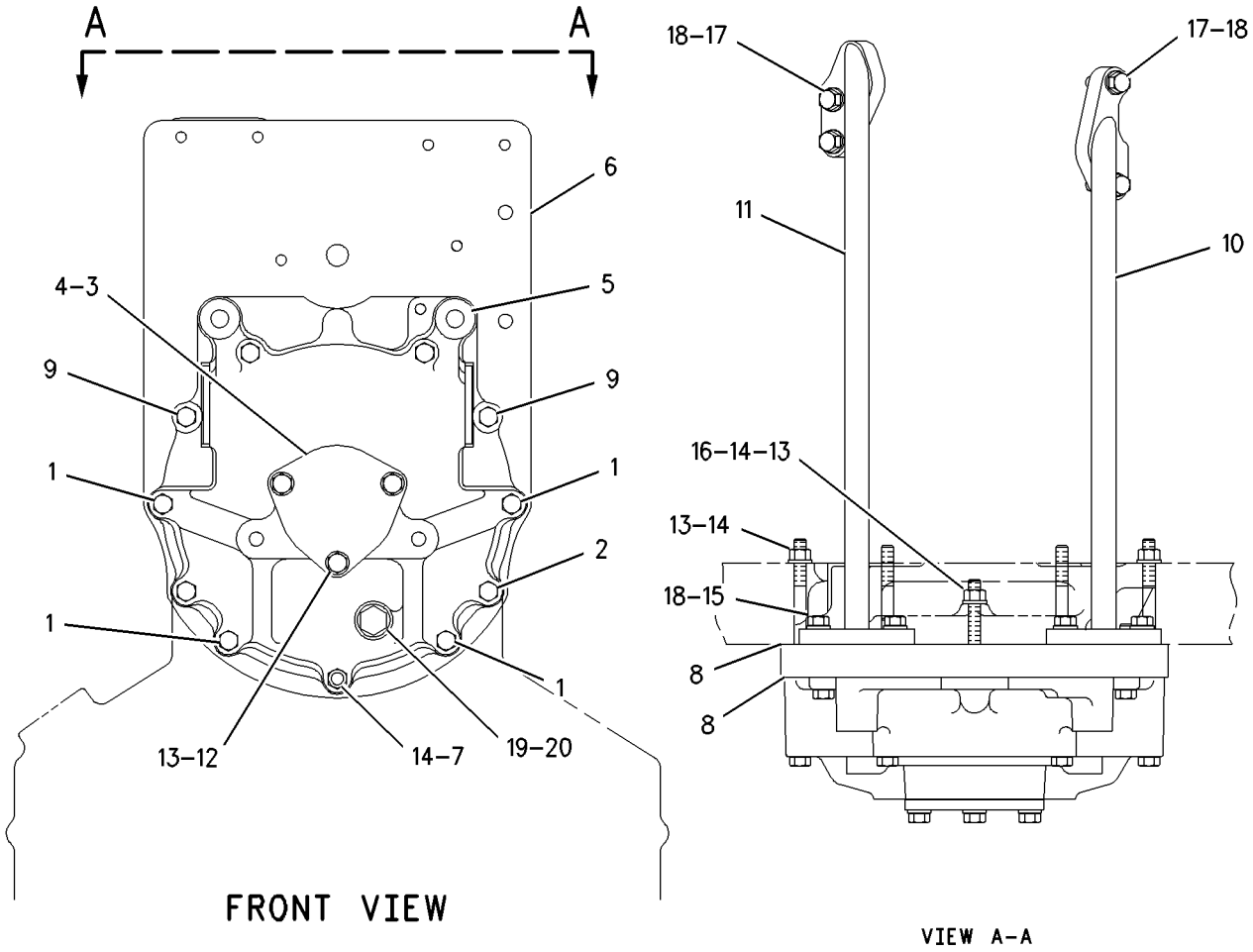

GRAPHIC #1 g00671676

BASIC ENGINE

127-3515 COVER GP-VALVE MECHANISM

S/N: 80M1-862
PART OF 115-7641, 135-7810 ENGINE AR
ALSO AN ATTACHMENT

SMCS-1107, 1120 **i01739016**

NOTE	REF NO	GRAPHIC REF	PART NUMBER	QTY	PART NAME 1 2 3 4 5 6 (PRODUCT LEVEL)	SEE PAGE
	1	1	**114-8684**	3	COVER-VALVE MECHANISM	
	2	1	**119-9015**	3	COVER AS-VALVE	
					(EACH INCLUDES)	
		1	**6V-5100**	1	SEAL-O-RING	
		1	**7C-6514**	1	ADAPTER	
	3	1	**1B-2790**	65	BOLT (5/16-18X1.375 IN)	
	4	1	**9M-1974**	66	WASHER-HARD (8.8X16X2MM THK)	
	5	1	**106-9488**	6	BASE-VALVE COVER	
	6	1	**108-3956**	12	SEAL-DIAMOND	
	7	1	**4N-4668**	2	BREATHER AS	
	8	1	**6V-3831**	2	SEAL-O-RING	
	9	1	**2N-8109**	2	CLAMP	
	10	1	**1A-9579**	1	BOLT (5/16-18X1.5 IN)	

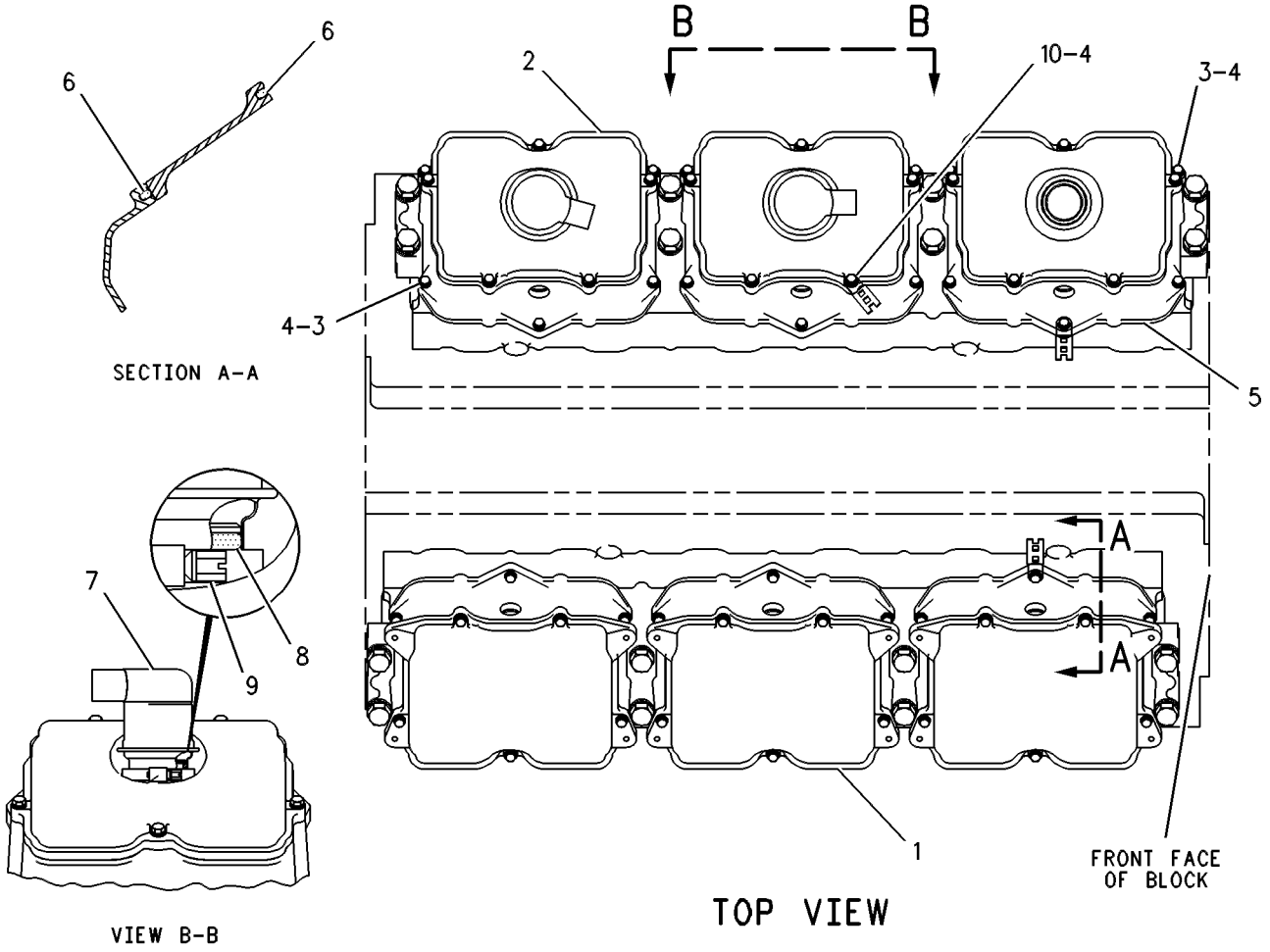

GRAPHIC #1 g00253331

138-4125 COVER GP-VALVE MECHANISM

S/N: 80M863-UP
PART OF 115-7641, 135-7810, 155-0058 ENGINE AR
ALSO AN ATTACHMENT

SMCS-1107, 1120 **i01739018**

NOTE	REF NO	GRAPHIC REF	PART NUMBER	QTY	PART NAME 1 2 3 4 5 6 (PRODUCT LEVEL)	SEE PAGE
	1	1	**114-8684**	2	COVER-VALVE MECHANISM	
	2	1	**119-9015**	4	COVER AS-VALVE	
					(EACH INCLUDES)	
		1	**6V-5100**	1	SEAL-O-RING	
		1	**7C-6514**	1	ADAPTER	
		1	**114-8681**	1	COVER-VALVE MECHANISM	
	3	1	**1B-2790**	65	BOLT (5/16-18X1.375 IN)	
	4	1	**9M-1974**	66	WASHER-HARD (8.8X16X2MM THK)	
	5	1	**106-9488**	6	BASE-VALVE COVER	
	6	1	**108-3956**	12	SEAL-DIAMOND	
	7	1	**4N-4668**	3	BREATHER AS	
	8	1	**6V-3831**	3	SEAL-O-RING	
	9	1	**2N-8109**	3	CLAMP	
	10	1	**1A-9579**	1	BOLT (5/16-18X1.5 IN)	

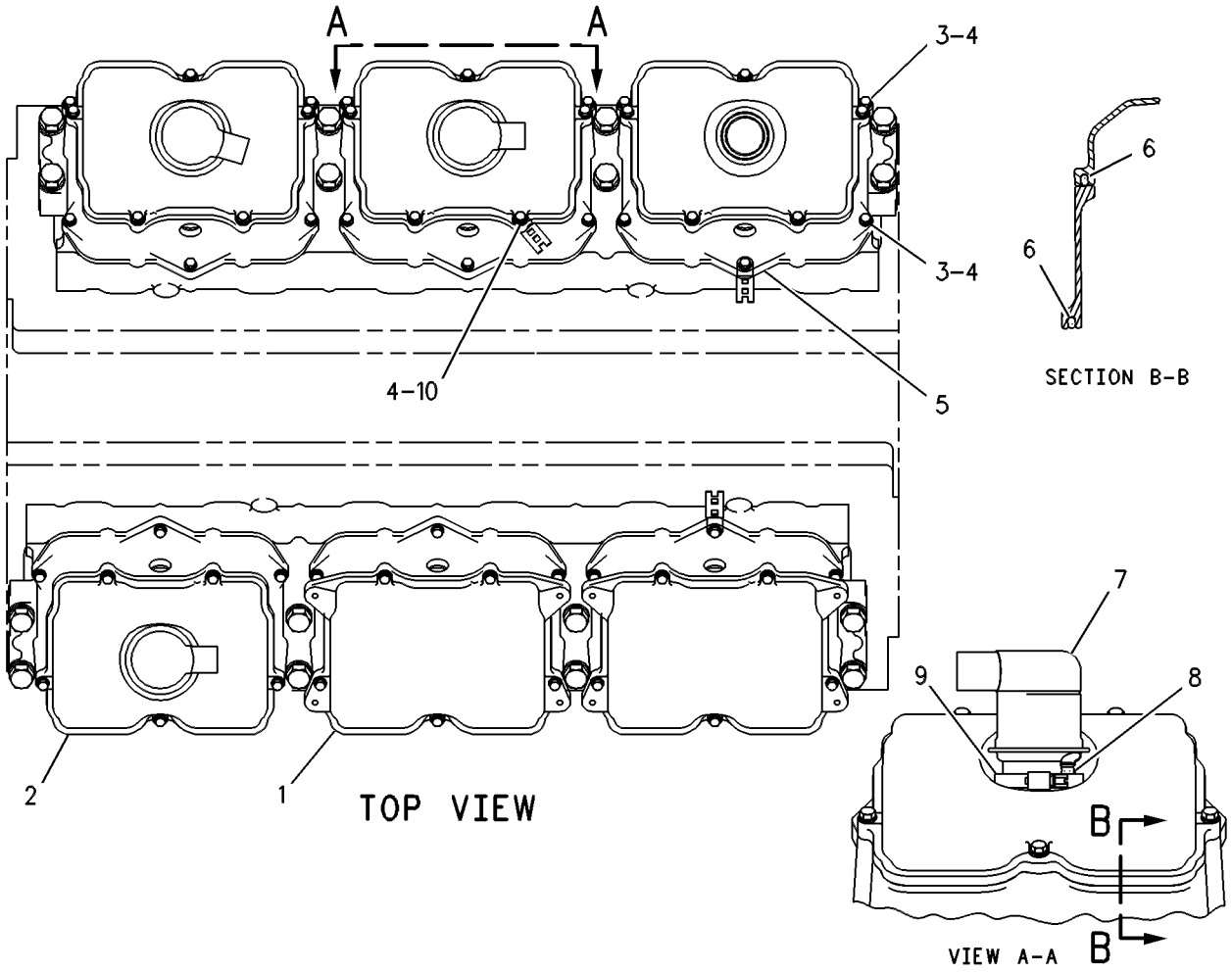

GRAPHIC #1 g00276099

BASIC ENGINE

4N-0922 CRANKSHAFT GP

S/N: 80M1-2866

PART OF 115-7641, 135-7810, 155-0058 ENGINE AR

ALSO AN ATTACHMENT

SMCS-1202, 1203, 1204, 1230, 1231, 1232 **i01481832**

NOTE	REF NO	GRAPHIC REF	PART NUMBER	QTY	PART NAME 1 2 3 4 5 6 (PRODUCT LEVEL)	SEE PAGE
CR	1	1	**2W-4088**	1	CRANKSHAFT AS	
	2	1	**4N-0684**	1	DOWEL	
	3	1	**114-0966**	1	GEAR-CRANKSHAFT (99 TEETH)	
	4	1	**8T-6757**	6	PLUG-PIPE	
	5	1	**7S-5005**	1	DOWEL	
	6	1	**7E-9262**	2	PLATE-THRUST	
	7	1	**2W-1733**	1	SEAL GP-CRANKSHAFT	
	8	1	**4W-5492**	7	BEARING-MAIN (STANDARD)	
AC		1	**4W-5698**	7	BEARING-MAIN (.025IN US)	
AC		1	**4W-5699**	7	BEARING-MAIN (.050IN US)	
AC		1	**4W-5700**	7	BEARING-MAIN (.025IN OS)	
AC		1	**4W-5701**	7	BEARING-MAIN (.025IN OS/.025IN US)	
	9	1	**2W-1734**	1	SEAL GP-CRANKSHAFT	
					AVAILABLE REPAIR KIT(S):	
A			**196-9523**		KIT-BEARING (STANDARD)	
					(INCLUDES A COMPLETE SET OF MAIN BEARINGS AND THRUST PLATES)	

A-NOT PART OF THIS GROUP
C-CHANGE FROM PREVIOUS TYPE
R-REMFG PART MAY BE AVAILABLE

4N-0922 **CRANKSHAFT GP** *(contd.)* **i01481832**

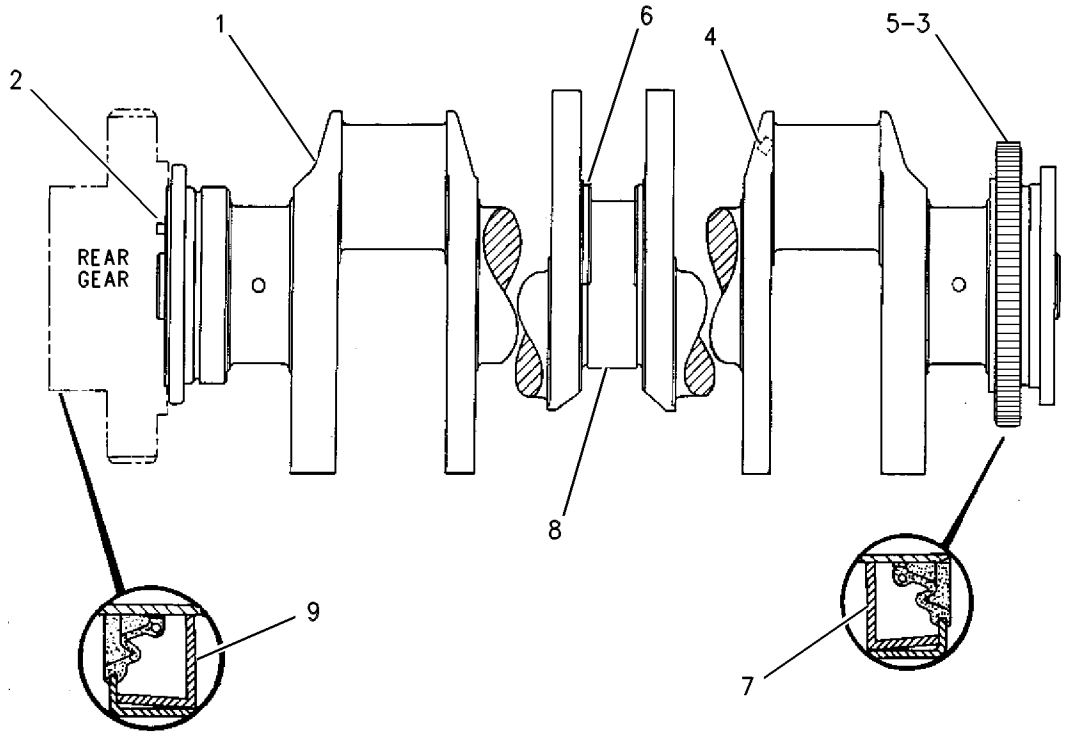

GRAPHIC #1 g00506244

BASIC ENGINE

4N-0922 CRANKSHAFT GP

S/N: 80M2867-UP

PART OF 115-7641, 135-7810, 155-0058 ENGINE AR

ALSO AN ATTACHMENT

SMCS-1202, 1203, 1204, 1230, 1231, 1232 **i01612513**

NOTE	REF NO	GRAPHIC REF	PART NUMBER	QTY	PART NAME 1 2 3 4 5 6 (PRODUCT LEVEL)	SEE PAGE
CR	1	1	**151-2941**	1	CRANKSHAFT AS	
	2	1	**4N-0684**	1	DOWEL	
	3	1	**151-2940**	1	GEAR-CRANKSHAFT (99 TEETH)	
	4	1	**8T-6757**	6	PLUG-PIPE	
	5	1	**7S-5005**	1	DOWEL	
	6	1	**7E-9262**	2	PLATE-THRUST	
	7	1	**2W-1733**	1	SEAL GP-CRANKSHAFT	
	8	1	**4W-5492**	7	BEARING-MAIN (STANDARD)	
AB		1	**4W-5698**		BEARING-MAIN (0.63MM U.S.)	
AB		1	**4W-5699**		BEARING-MAIN (1.27MM U.S.)	
AB		1	**4W-5700**		BEARING-MAIN (0.63MM O.S.)	
AB		1	**4W-5701**		BEARING-MAIN (0.63MM U.S./0.63MM O.S.)	
	9	1	**2W-1734**	1	SEAL GP-CRANKSHAFT	
					AVAILABLE REPAIR KIT(S):	
A			**196-9523**		KIT-BEARING (STANDARD)	
					(INCLUDES A COMPLETE SET OF MAIN BEARINGS AND THRUST PLATES)	

A-NOT PART OF THIS GROUP
B-USE AS REQUIRED
C-CHANGE FROM PREVIOUS TYPE
R-REMFG PART MAY BE AVAILABLE

4N-0922 **CRANKSHAFT GP** *(contd.)* **i01612513**

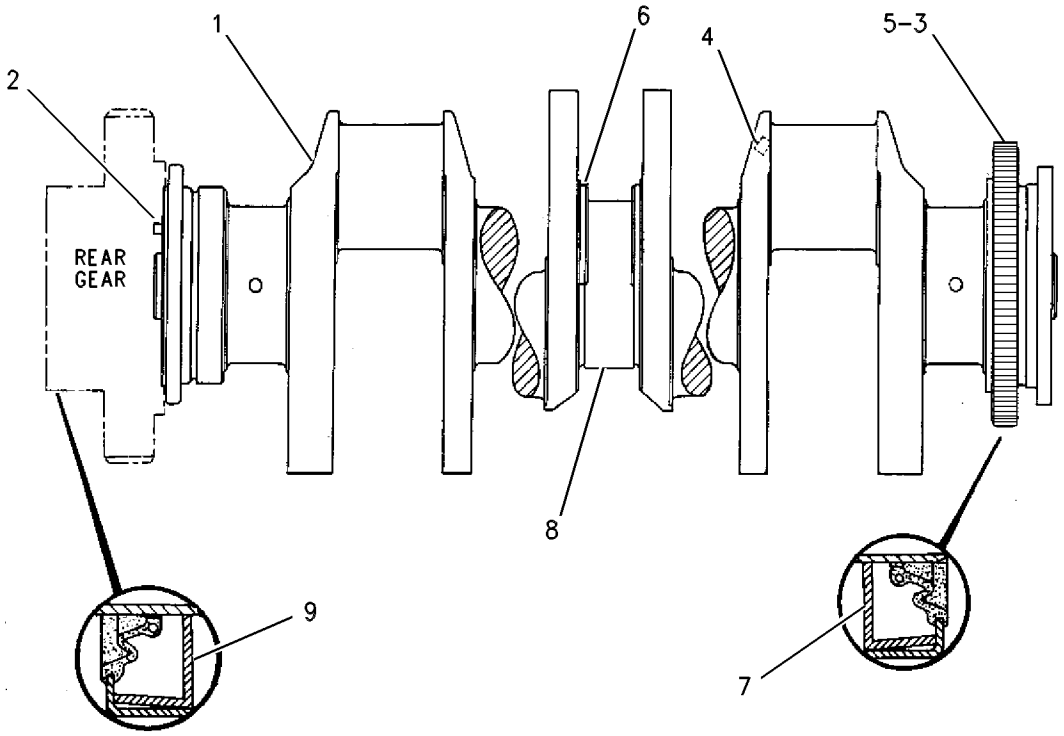

GRAPHIC #1 g00506244

BASIC ENGINE

190-7653 CRANKSHAFT GP

S/N: 80M3732-UP
PART OF 115-7641, 135-7810, 155-0058 ENGINE AR
ALSO AN ATTACHMENT

SMCS-1202, 1203, 1204, 1230, 1231, 1232 **i01729337**

NOTE	REF NO	GRAPHIC REF	PART NUMBER	QTY	PART NAME 1 2 3 4 5 6 (PRODUCT LEVEL)	SEE PAGE
R	1	1	**151-2941**	1	CRANKSHAFT AS	
	1A	1	**151-2940**	1	GEAR-CRANKSHAFT (99 TEETH)	
	1B	1	**7S-5005**	1	DOWEL	
	1C	1	**4N-0684**	1	DOWEL	
	1D	1	**8T-6757**	6	PLUG-PIPE	
	2	1	**4W-5492**	7	BEARING-MAIN	
AB		1	**4W-5698**	7	BEARING-MAIN (0.63MM U.S.)	
AB		1	**4W-5699**	7	BEARING-MAIN (1.27MM U.S.)	
AB		1	**4W-5700**	7	BEARING-MAIN (0.63MM O.S.)	
AB		1	**4W-5701**	7	BEARING-MAIN (0.63MM U.S./0.63MM O.S.)	
	3	1	**7E-9262**	2	PLATE-THRUST	
	4	1	**142-5867**	1	SEAL GP-CRANKSHAFT	
	5	1	**2W-1734**	1	SEAL GP-CRANKSHAFT	

A-NOT PART OF THIS GROUP
B-USE AS REQUIRED
R-REMFG PART MAY BE AVAILABLE

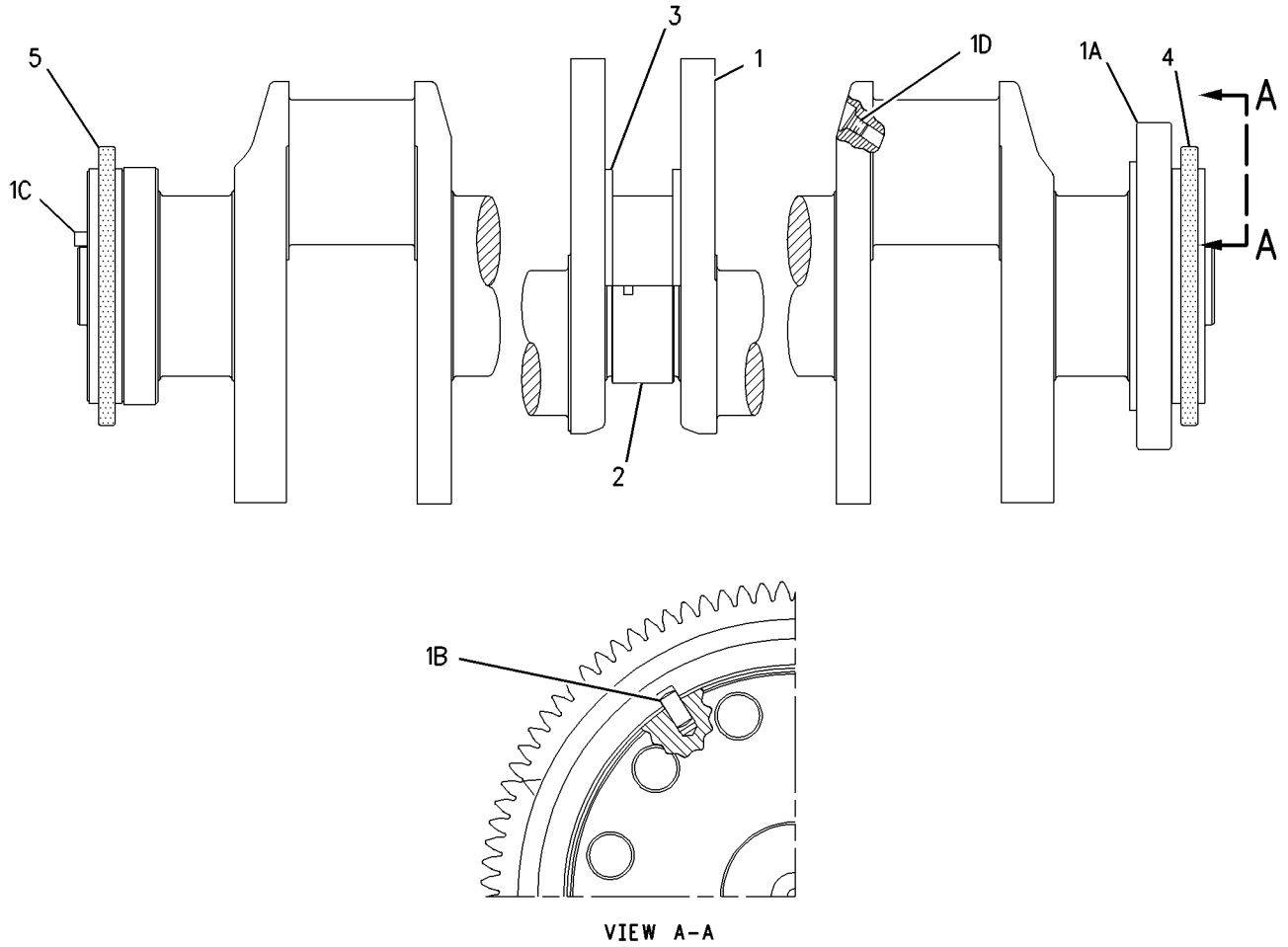

GRAPHIC #1 g00725011

MEMORANDA

BASIC ENGINE

117-9512 CYLINDER BLOCK AS

S/N: 80M1-UP

PART OF 109-9010 CYLINDER BLOCK GP

FIELD REPLACEMENT ORDER 126-1373—PAGE 40, 12-111-8606 BOLT-OIL JET, 12-168-4538 TUBE AS-OIL JET, 12-7W-4990 TUBE AS-OIL JET

ALSO AN ATTACHMENT

SMCS-1117, 1201, 1211, 1216, 1217, 1221, 1222, 1223, 1224, 1238, 1239, 1240, 1331 **i01729300**

NOTE	REF NO	GRAPHIC REF	PART NUMBER	QTY	PART NAME 1 2 3 4 5 6 (PRODUCT LEVEL)	SEE PAGE
	1	1	**110-2220**	12	SEAL-LINER (141MM ID)	
	2	1	**142-7072**	12	SEAL-LINER (140.20MM ID)	
	3	1	**142-6217**	12	SEAL-LINER	
	4	1	**2W-6000**	12	LINER-CYLINDER	
	5	1	**9L-5854**	12	BAND-FILLER (5.125MM ID)	
	6	1	**3P-1323**	14	BOLT (BEARING CAP)	
		1	**9H-1031**	14	WASHER-HARD (24X41.5X6MM THK)	
	7	1	**4N-0614**	7	CAP-CRANKSHAFT BEARING	
	8	1	**4N-6658**	2	BEARING-SLEEVE	
	9	1	**7W-6492**	2	PLUG-PIPE	
	10	1	**4N-0685**	5	BEARING-SLEEVE	
AFJT		1	**4W-4588**		SLEEVE-LIFTER BORE	
AFLT		1	**4W-6061**		SLEEVE-BOTTOM LINER	
AFJT		1	**2W-3815**		INSERT-SEAT (1.59MM THK)	
AFJT		1	**5N-0093**		INSERT-SEAT (2.7MM THK)	
AFJT		1	**9Y-3368**		INSERT-LINER SEAT (.834MM THK)	

A-NOT PART OF THIS GROUP
F-NOT SHOWN
J-FOR SALVAGE OF DAMAGED LIFTER BORES IN CYLINDER BLOCK
L-FOR SALVAGE OF THE BOTTOM LINER O-RING BORE
T-QTY TO BE DETERMINED BY USER

117-9512 **CYLINDER BLOCK AS** *(contd.)* **i01729300**

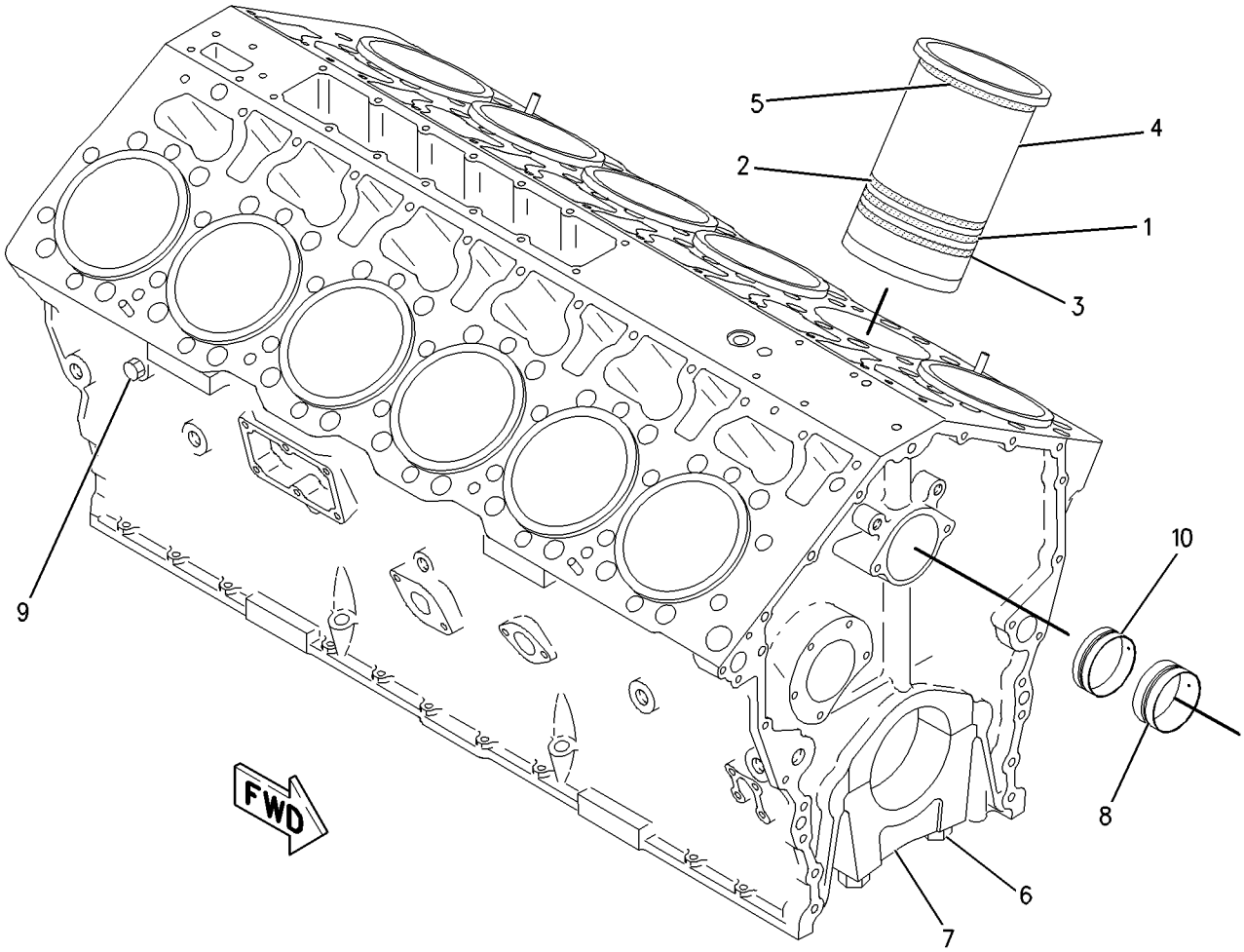

GRAPHIC #1 g00836193

BASIC ENGINE

126-1372 CYLINDER BLOCK AS

S/N: 80M1-UP

PART OF 126-1373 CYLINDER BLOCK GP

SMCS-1117, 1201, 1211, 1216, 1217, 1221, 1222, 1223, 1224, 1238, 1239, 1240, 1331

i01739333

NOTE	REF NO	GRAPHIC REF	PART NUMBER	QTY	PART NAME 1 2 3 4 5 6 (PRODUCT LEVEL)	SEE PAGE
	1	1	**3P-1323**	14	BOLT (BEARING CAP)	
		1	**9H-1031**	14	WASHER-HARD (24X41.5X6MM THK)	
	2	1	**4N-5858**	7	CAP (CRANKSHAFT BEARING)	
	3	1	**4N-6658**	2	BEARING-SLEEVE	
	4	1	**4N-0685**	5	BEARING-SLEEVE	
AFJN		1	**4W-4588**		SLEEVE-LIFTER BORE	
AFLN		1	**4W-6061**		SLEEVE-BOTTOM LINER	
AFJN		1	**2W-3815**		INSERT-SEAT (1.59MM THK)	
AFJN		1	**5N-0093**		INSERT-SEAT (2.7MM THK)	
AFJN		1	**9Y-3368**		INSERT-LINER SEAT (.834MM THK)	

A-NOT PART OF THIS GROUP
F-NOT SHOWN
J-FOR SALVAGE OF DAMAGED LIFTER BORES IN CYLINDER BLOCK
L-FOR SALVAGE OF THE BOTTOM LINER O-RING BORE
N-QUANTITY TO BE DETERMINED BY USER

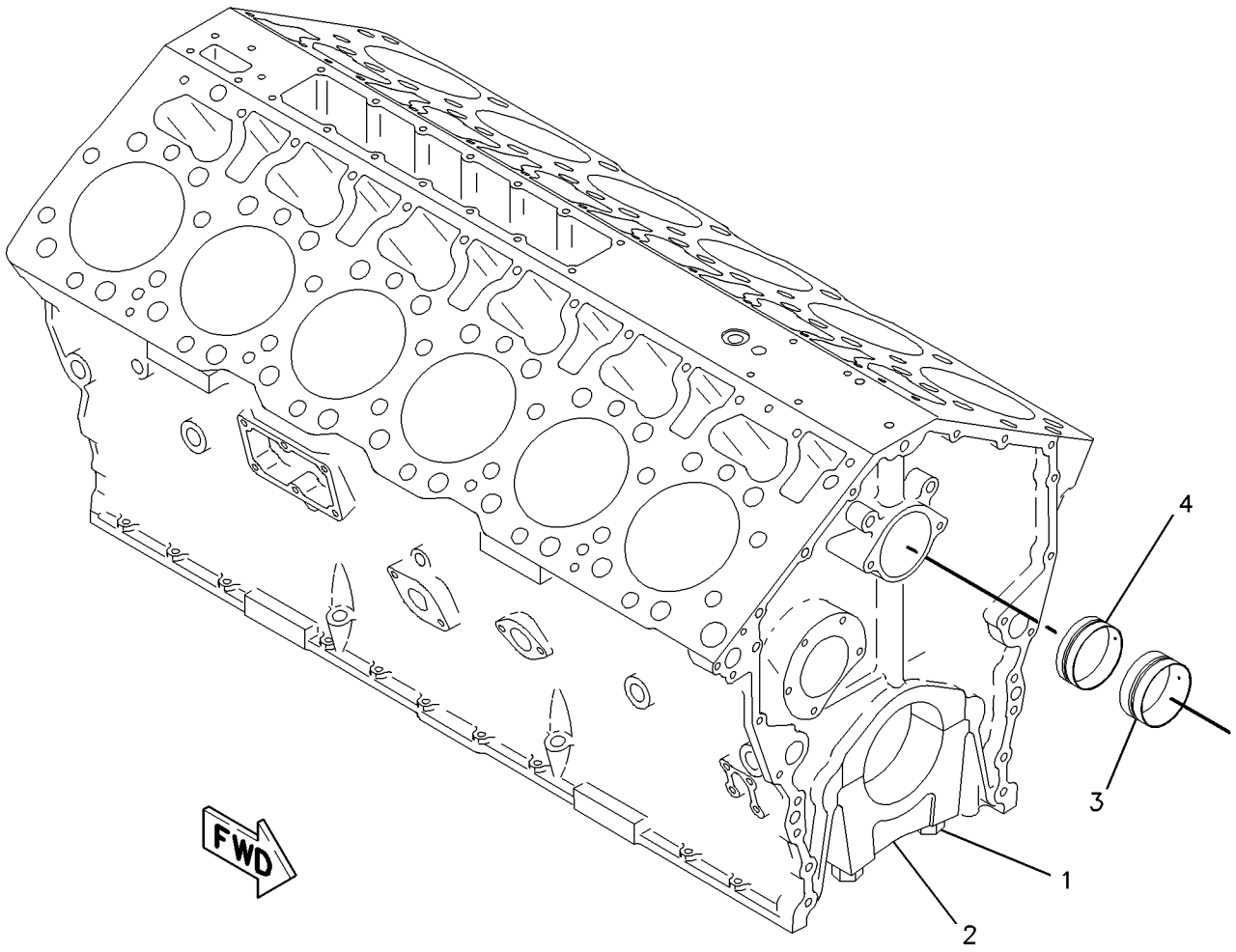

GRAPHIC #1

g00836199

MEMORANDA

BASIC ENGINE

109-9010 CYLINDER BLOCK GP*R

S/N: 80M1-UP

PART OF 115-7641, 135-7810, 155-0058 ENGINE AR

ALSO AN ATTACHMENT

SMCS-1201 **i01113363**

NOTE	REF NO	GRAPHIC REF	PART NUMBER	QTY	PART NAME 1 2 3 4 5 6 (PRODUCT LEVEL)	SEE PAGE
	2	1	**4N-1650**	4	DOWEL	
	3	1	**8T-6763**	4	PLUG-PIPE (1/4-18 NPTF THD)	
Y	4	1	*117-9512*	1	CYLINDER BLOCK AS	34
	5	1	**8T-6757**	5	PLUG-PIPE (1/8-27 NPTF)	
	6	1	**6N-9135**	2	GASKET-PLATE	
	7	1	**6I-4611**	2	PLATE-SPACER	
	8	1	**7C-9614**	3	PLUG-TAPERLOCK (1.63IN X 12 THD)	
	9	1	**4N-0683**	4	DOWEL	
	10	1	**101-8917**	26	STUD-TAPERLOCK	
	11	1	**3B-0645**	1	PLUG-CUP (32.08MM AVG OD)	
	12	1	**6L-4428**	3	STUD-TAPERLOCK	
	14	1	**5P-8356**	4	SEAL-O-RING (21.89MM ID)	
	15	1	**3S-6605**	2	PLUG-CUP	
	16	1	**7C-7407**	1	STUD	
AFLN		1	**101-0523**		INSERT-LINER SEAT (5.21MM THK)	

A-NOT PART OF THIS GROUP
F-NOT SHOWN
L-QUANTITY TO BE DETERMINED BY USER
N-FOR SALVAGE OF THE DAMAGED LIFTER BORES IN CYLINDER BLOCK
Y-SEPARATE ILLUSTRATION

109-9010 **CYLINDER BLOCK GP** *(contd.)* **i01113363**

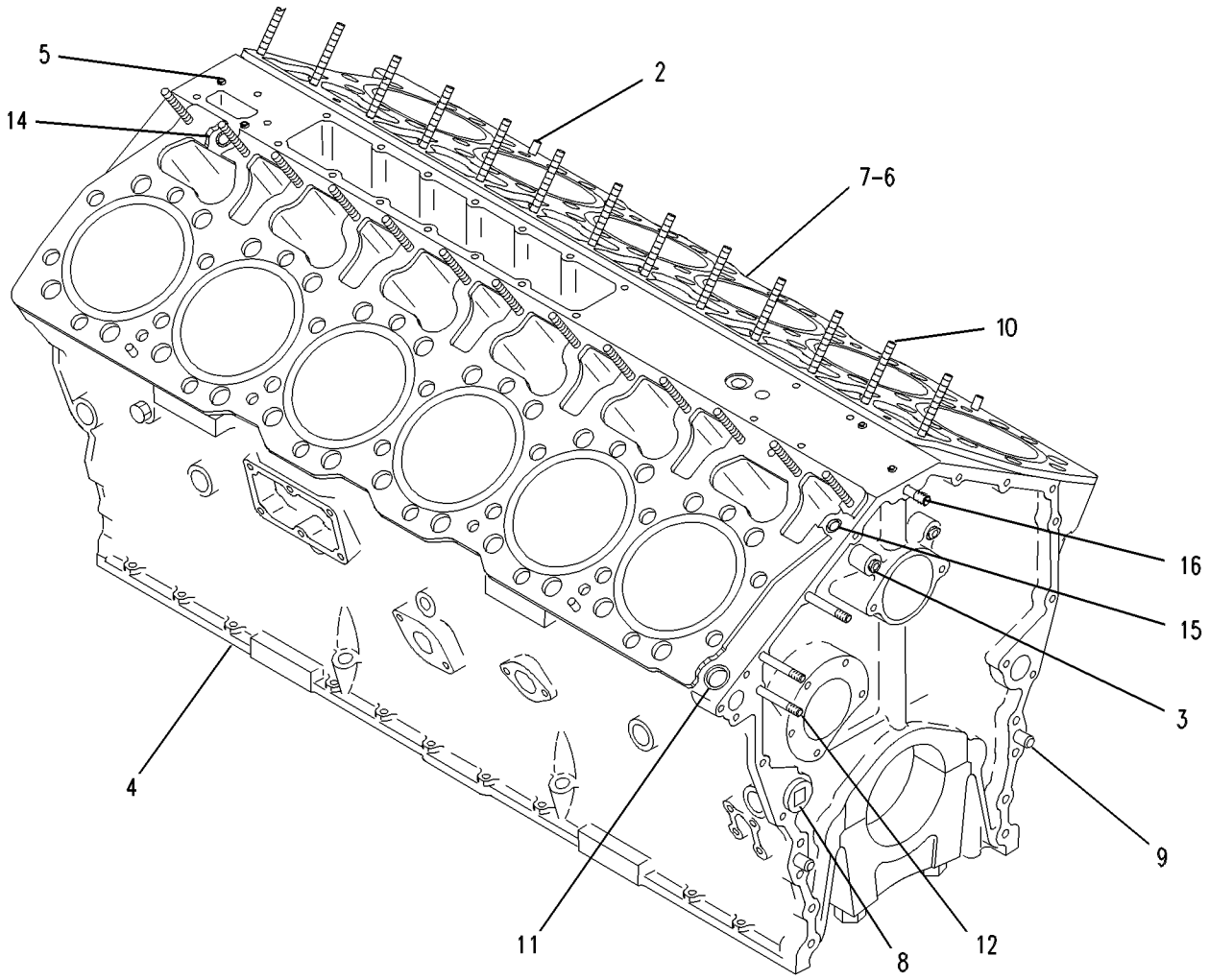

GRAPHIC #1 g00588493

BASIC ENGINE

126-1373 CYLINDER BLOCK GP

S/N: 80M1-UP

FIELD REPLACEMENT FOR 117-9512—PAGE 34

SMCS-1201 **i01627514**

NOTE	REF NO	GRAPHIC REF	PART NUMBER	QTY	PART NAME 1 2 3 4 5 6 (PRODUCT LEVEL)	SEE PAGE
	1	1	**7W-6534**	4	PLUG-PIPE (3/8X1/2)	
	2	1	**9S-4190**	8	PLUG-O-RING	
		1	**114-4427**	8	SEAL-O-RING	
	3	1	**8T-6757**	6	PLUG-PIPE	
	4	1	**7W-6492**	2	PLUG-PIPE	
Y	5	1	**126-1372**	1	CYLINDER BLOCK AS	36
	6	1	**3S-6605**	2	PLUG-CUP	
	7	1	**8T-6763**	4	PLUG-PIPE	
	8	1	**3B-0645**	1	PLUG-CUP	
	9	1	**7C-9614**	3	PLUG-TAPERLOCK (1-5/8-12 THD)	

Y-SEPARATE ILLUSTRATION

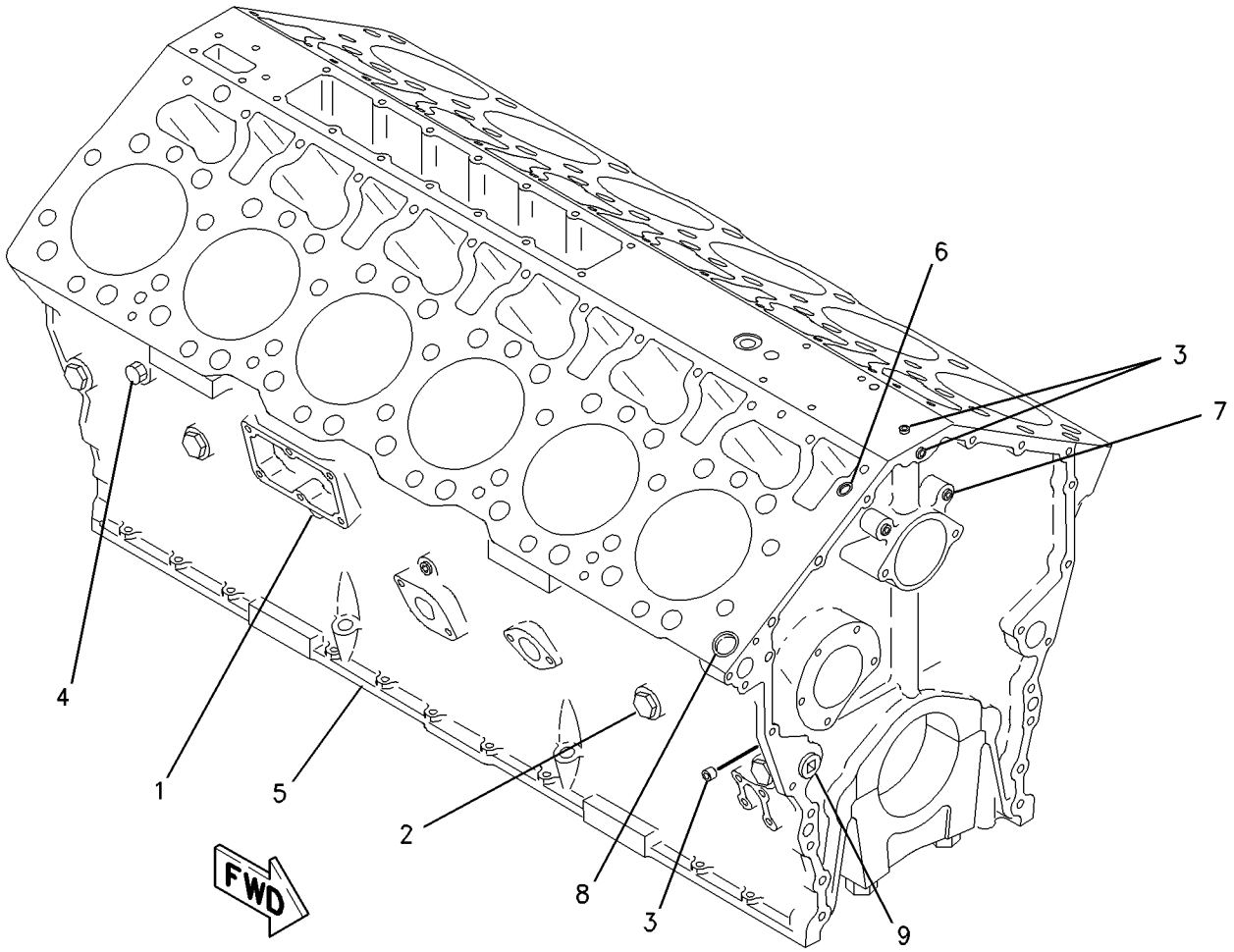

GRAPHIC #1 g00836191

BASIC ENGINE

7W-2243 CYLINDER HEAD AS*R

S/N: 80M1-1099

FIELD REPLACEMENT FOR 105-3800—PAGE 42

SMCS-1100, 1101, 1103, 1104, 1105, 1106, 1108, 1109, 1115, 1117, 1121, 1124, 1125 **i01452565**

NOTE	REF NO	GRAPHIC REF	PART NUMBER	QTY	PART NAME 1 2 3 4 5 6 (PRODUCT LEVEL)	SEE PAGE
CY	1	1	*105-3800*	1	CYLINDER HEAD AS	42
	2	1	**173-7188**	24	GUIDE-VALVE	
	3	1	**2N-5775**	12	DOWEL	

C-CHANGE FROM PREVIOUS TYPE
Y-SEPARATE ILLUSTRATION

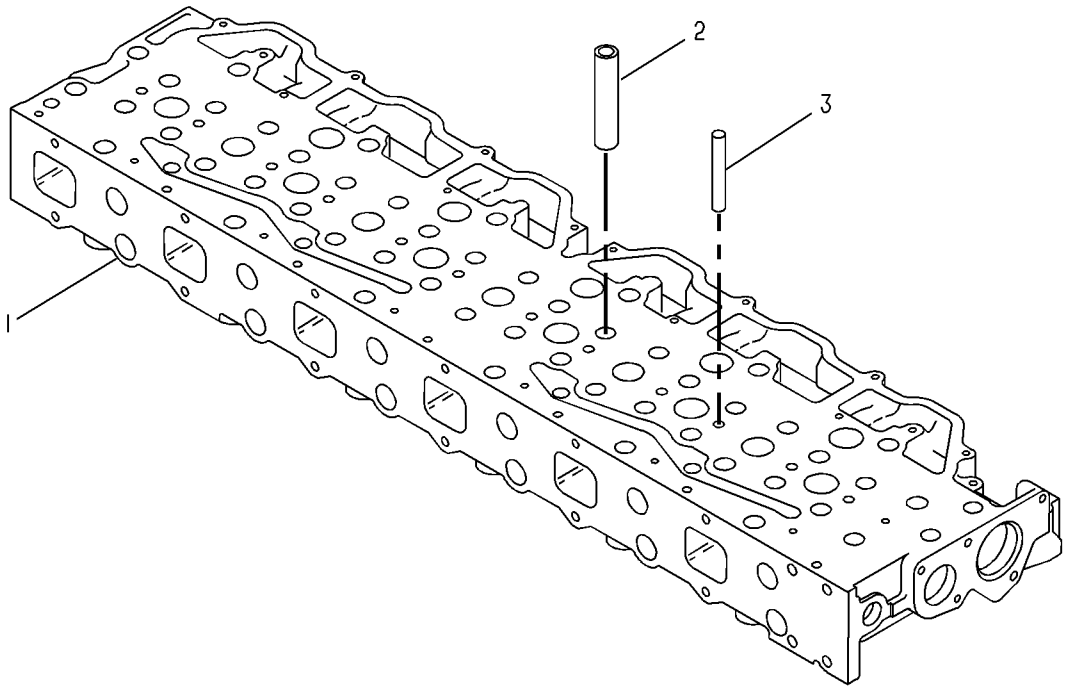

GRAPHIC #1 g00081812

105-3800 CYLINDER HEAD AS

S/N: 80M1-1099
PART OF 7W-2243 CYLINDER HEAD AS, 108-1887 CYLINDER HEAD GP
FIELD REPLACEMENT ORDER 7W-2243—PAGE 41
ALSO AN ATTACHMENT

SMCS-1100, 1101, 1103, 1104, 1105, 1106, 1108, 1109, 1115, 1117, 1121, 1124, 1125

i01282350

NOTE	REF NO	GRAPHIC REF	PART NUMBER	QTY	PART NAME 1 2 3 4 5 6 (PRODUCT LEVEL)	SEE PAGE
	1	1	**3B-0645**	10	PLUG-CUP (32.08MM AVG OD)	
	2	1	**4N-5893**	12	INSERT-VALVE SEAT (INTAKE)	
	3	1	**1W-5283**	12	INSERT-VALVE SEAT (EXHAUST)	
	4	1	**3B-0623**	12	PLUG-CUP (25.73MM OD)	

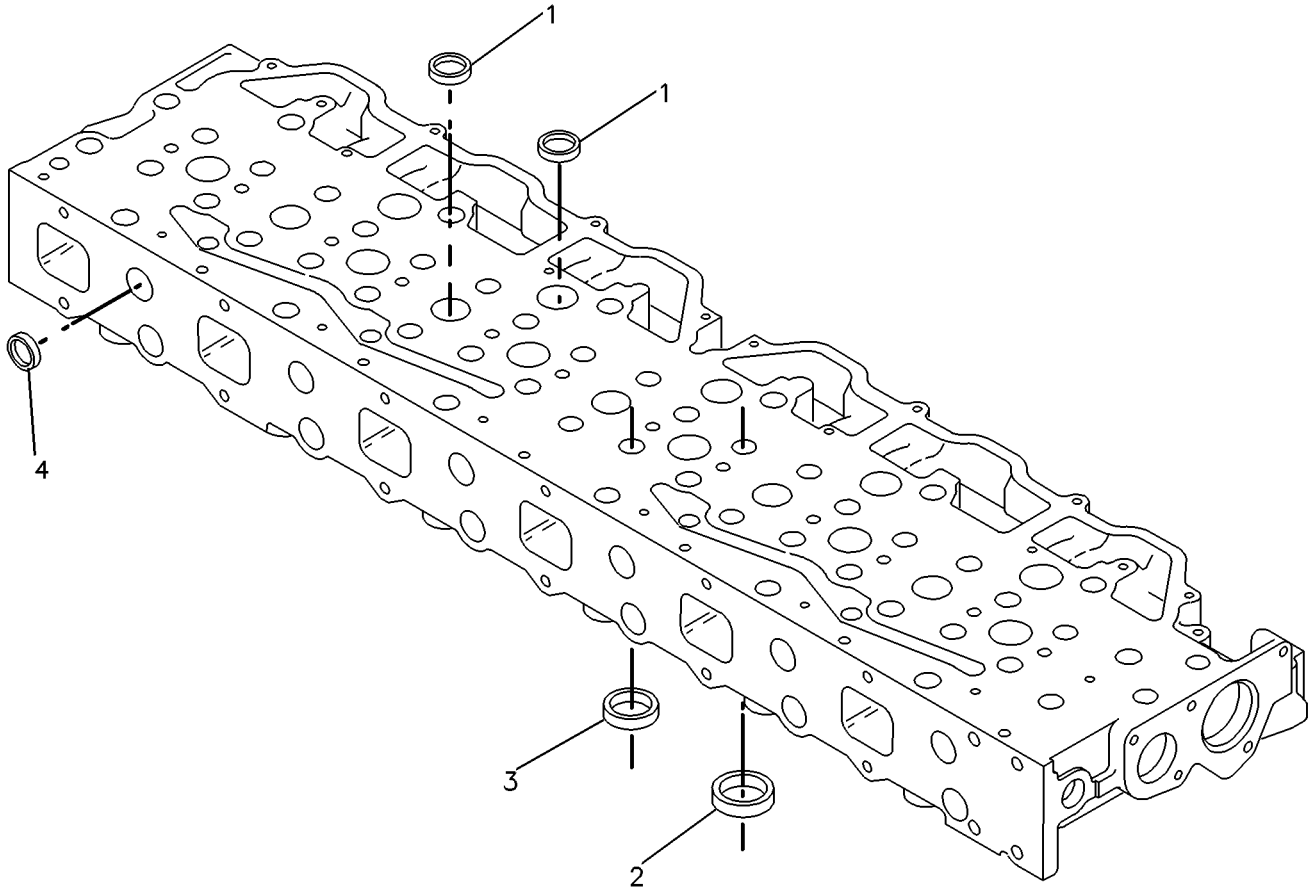

GRAPHIC #1

g00082752

143-3615 CYLINDER HEAD AS

S/N: 80M1100-UP
PART OF 192-1322 CYLINDER HEAD AS, 108-1887 CYLINDER HEAD GP
FIELD REPLACEMENT ORDER 192-1322—PAGE 44
ALSO AN ATTACHMENT

SMCS-1100, 1101, 1103, 1104, 1105, 1106, 1108, 1109, 1115, 1117, 1121, 1124, 1125

i01729304

NOTE	REF NO	GRAPHIC REF	PART NUMBER	QTY	PART NAME 1 2 3 4 5 6 (PRODUCT LEVEL)	SEE PAGE
	1	1	**3B-0645**	10	PLUG-CUP	
	2	1	**4N-5893**	12	INSERT-VALVE SEAT (INLET)	
	3	1	**1W-5283**	12	INSERT-VALVE SEAT (EXHAUST)	
	4	1	**3B-0623**	12	PLUG-CUP	

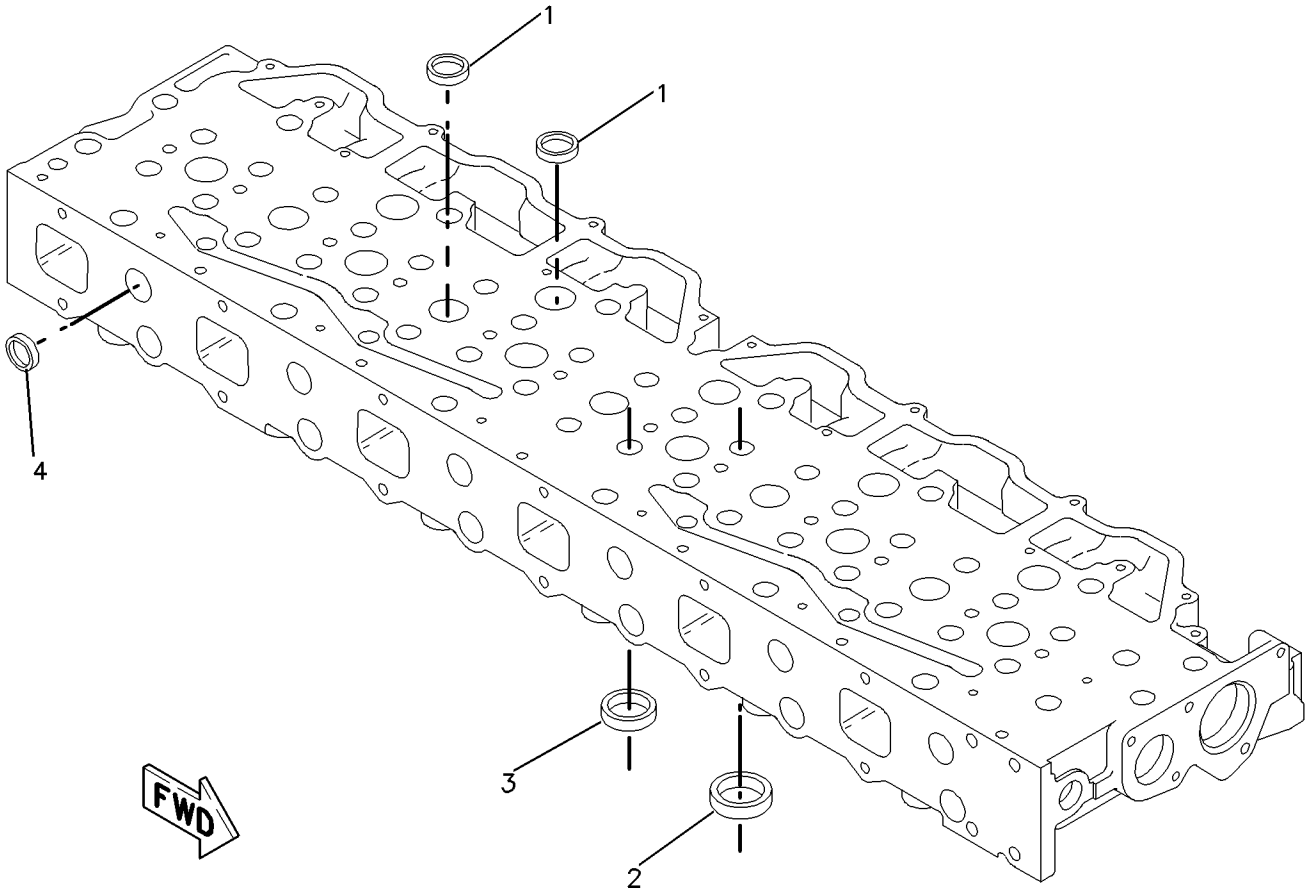

GRAPHIC #1

g00836011

192-1322 CYLINDER HEAD AS*R

S/N: 80M1100-UP

FIELD REPLACEMENT FOR 143-3615—PAGE 43

SMCS-1100, 1101, 1103, 1104, 1105, 1106, 1108, 1109, 1115, 1117, 1121, 1124, 1125

i01614791

NOTE	REF NO	GRAPHIC REF	PART NUMBER	QTY	PART NAME 1 2 3 4 5 6 (PRODUCT LEVEL)	SEE PAGE
Y	1	1	*143-3615*	1	CYLINDER HEAD AS	43
	2	1	**173-7188**	24	GUIDE-VALVE	
	3	1	**102-7494**	2	DOWEL	

Y-SEPARATE ILLUSTRATION

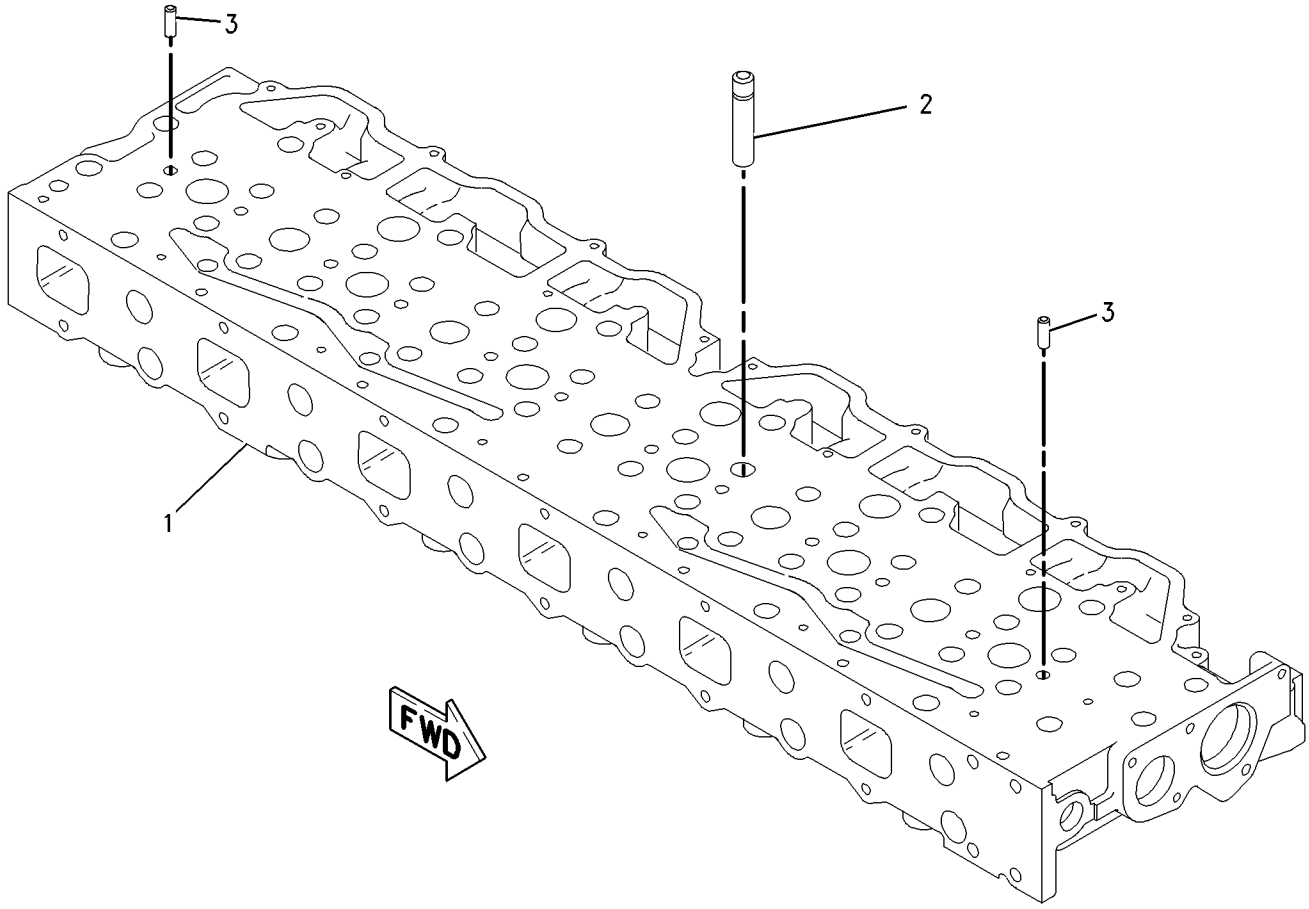

GRAPHIC #1

g00836089

108-1887 CYLINDER HEAD GP*R

S/N: 80M1-1099
PART OF 127-3513 CYLINDER HEAD GP
ALSO AN ATTACHMENT

SMCS-1100, 1103, 1104, 1105, 1106, 1108, 1109, 1115, 1117, 1121, 1124, 1125 **i00548595**

NOTE	REF NO	GRAPHIC REF	PART NUMBER	QTY	PART NAME 1 2 3 4 5 6 (PRODUCT LEVEL)	SEE PAGE
Y	1	1	*105-3800*	1	CYLINDER HEAD AS	42
	2	1	**122-0322**	12	VALVE-INLET	
	3	1	**102-7494**	2	DOWEL	
	4	1	**2A-4429**	48	LOCK-RETAINER	
	5	1	**137-6500**	24	ROTOCOIL AS	
					(EACH INCLUDES)	
		1	**137-6501**	1	SHIELD-OIL	
	6	1	**4N-5906**	24	SPRING-VALVE	
	7	1	**122-0321**	12	VALVE-EXHAUST	
	8	1	**4N-2803**	24	GUIDE-VALVE	

Y-SEPARATE ILLUSTRATION

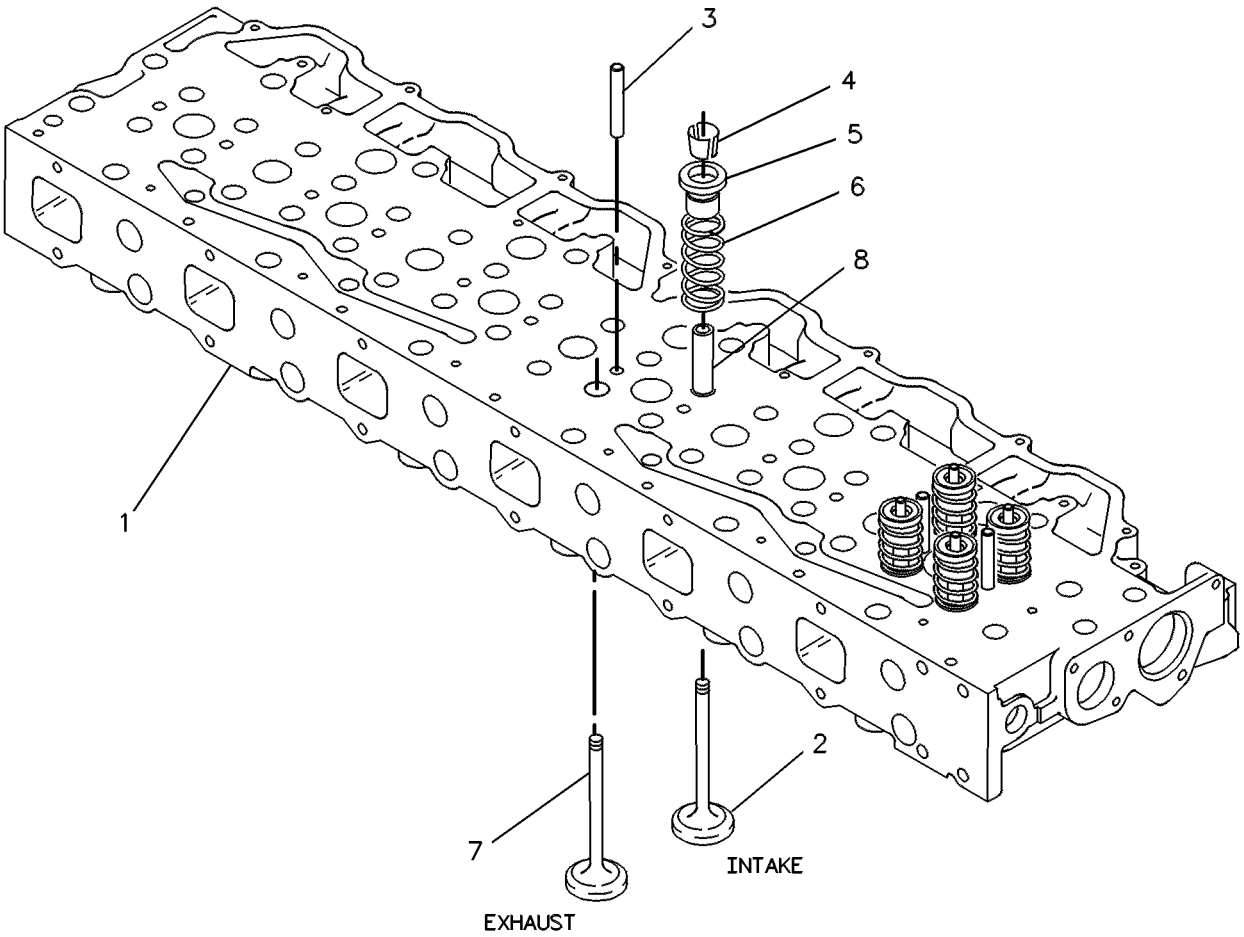

GRAPHIC #1 g00082776

108-1887 CYLINDER HEAD GP*R

S/N: 80M1100-UP
PART OF 127-3513 CYLINDER HEAD GP
ALSO AN ATTACHMENT

SMCS-1100, 1103, 1104, 1105, 1106, 1108, 1109, 1115, 1117, 1121, 1124, 1125

i01729298

NOTE	REF NO	GRAPHIC REF	PART NUMBER	QTY	PART NAME 1 2 3 4 5 6 (PRODUCT LEVEL)	SEE PAGE
YC	1	1	*143-3615*	1	CYLINDER HEAD AS	43
	2	1	**122-0322**	12	VALVE-INLET	
	3	1	**102-7494**	2	DOWEL	
	4	1	**2A-4429**	48	LOCK-RETAINER	
	5	1	**137-6500**	24	ROTOCOIL AS	
					(EACH INCLUDES)	
		1	**137-6501**	1	SHIELD-OIL	
	6	1	**4N-5906**	24	SPRING-VALVE	
	7	1	**122-0321**	12	VALVE-EXHAUST	
	8	1	**173-7188**	24	GUIDE-VALVE	

C-CHANGE FROM PREVIOUS TYPE
Y-SEPARATE ILLUSTRATION

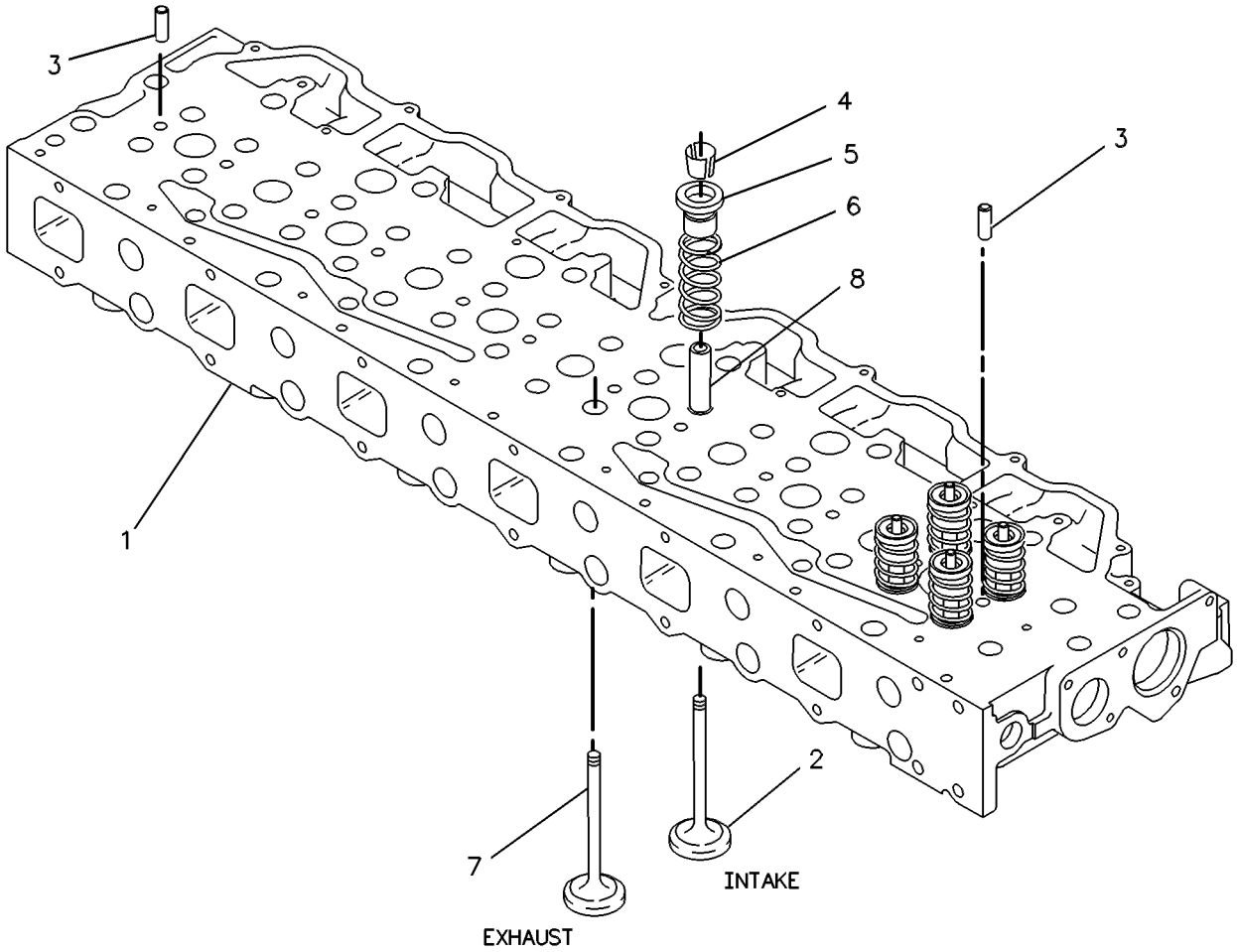

GRAPHIC #1

g00278854

MEMORANDA

BASIC ENGINE

127-3513 CYLINDER HEAD GP

S/N: 80M1-485
PART OF 115-7641, 135-7810 ENGINE AR
ALSO AN ATTACHMENT

SMCS-1100, 1103, 1104, 1105, 1106, 1108, 1109, 1115, 1117, 1121, 1124, 1125 **i01739356**

NOTE	REF NO	GRAPHIC REF	PART NUMBER	QTY	PART NAME 1 2 3 4 5 6 (PRODUCT LEVEL)	SEE PAGE
YR	1	1	*108-1887*	2	CYLINDER HEAD GP	45
	2	1	**123-4731**	2	MANIFOLD (HEUI FLUID)	
	3	1	**106-1792**	24	STUD-TAPERLOCK (3/8-16X3.93 IN)	
	4	1	**1D-4541**	12	BOLT (5/16-18X3 IN)	
	5	1	**5P-7684**	4	PLUG	
	6	1	**108-5806**	4	SEAL-O-RING	
	7	1	**8T-6764**	1	PLUG-PIPE	
	8	1	**5M-2894**	10	WASHER-HARD (10.2X18.5X2.5MM THK)	
	9	1	**9S-8752**	26	NUT-FULL (3/8-16 THD)	
	10	1	**108-5803**	2	SEAL-O-RING	
	11	1	**9S-8006**	2	PLUG	
	12	1	**1N-5999**	1	PLUG	
Y	13	1	*6V-2485*	1	SENSOR GP-PRESSURE (INJECTION ACTUATION)	453
	14	1	**124-6625**	1	PLATE	
	15	1	**7W-3447**	16	SPACER (10.2X19.05X10.2MM THK)	
	16	1	**103-6091**	1	SENSOR GP-PRESSURE (BOOST AIR)	
		1	**3E-3368**	1	WEDGE-PLUG LOCK	
		1	**8T-8730**	3	SOCKET-CONNECTOR	
BE		1	**9X-1813**		SLEEVE	
		1	**102-8808**	1	KIT-CONNECTING PLUG (3 PIN)	
					(INCLUDES PLUG AS & WEDGE)	
		1	**102-8813**	1	SEAL	
	17	1	**9X-0263**	1	ADAPTER	
	18	1	**6V-5048**	1	SEAL-O-RING	
	19	1	**9S-8004**	4	PLUG	
	20	1	**6V-5049**	4	SEAL-O-RING	
	21	1	**2K-2813**	40	BOLT (3/4-16X10IN)	
		1	**5H-1504**	40	WASHER-HARD (20X33.5X5MM THK)	
	22	1	**061-8561**	12	SEAL-O-RING	
	23	1	**6V-5266**	12	SEAL-O-RING	
	24	1	**107-9570**	24	SEAL-O-RING	
	25	1	**108-0219**	12	SLEEVE	
	26	1	**7E-7312**	2	GASKET-CYLINDER HEAD	
	27	1	**2N-7174**	12	GASKET-ADAPTER	
	28	1	**3E-6772**	48	SEAL	
B	29	1	**1U-8846**		SEALANT-GASKET	
	30	1	**033-6027**	2	SEAL-O-RING	
	31	1	**124-6626**	1	PLATE	

B-USE AS REQUIRED
E-ORDER BY THE CENTIMETER
R-REMFG PART MAY BE AVAILABLE
Y-SEPARATE ILLUSTRATION

127-3513 **CYLINDER HEAD GP** *(contd.)* **i01739356**

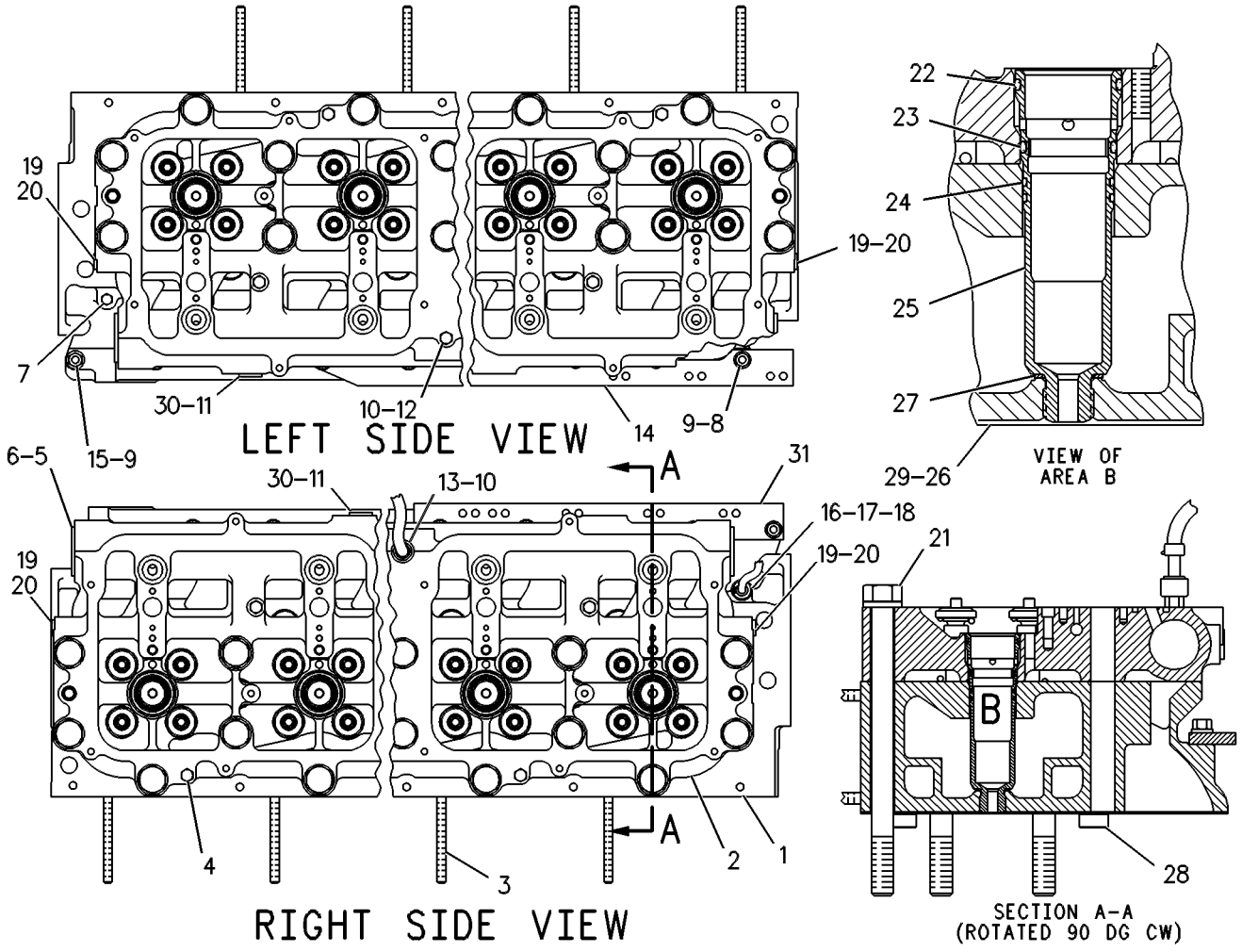

GRAPHIC #1 g00253078

BASIC ENGINE

127-3513 CYLINDER HEAD GP

S/N: 80M486-598
PART OF 115-7641, 135-7810 ENGINE AR
ALSO AN ATTACHMENT

SMCS-1100, 1103, 1104, 1105, 1106, 1108, 1109, 1115, 1117, 1121, 1124, 1125 **i01739611**

NOTE	REF NO	GRAPHIC REF	PART NUMBER	QTY	PART NAME 1 2 3 4 5 6 (PRODUCT LEVEL)	SEE PAGE
YR	1	1	*108-1887*	2	CYLINDER HEAD GP	45
	2	1	**123-4731**	2	MANIFOLD (HEUI FLUID)	
	3	1	**106-1792**	24	STUD-TAPERLOCK (3/8-16X3.93 IN)	
	4	1	**1D-4541**	12	BOLT (5/16-18X3 IN)	
	5	1	**5P-7684**	4	PLUG	
	6	1	**108-5806**	4	SEAL-O-RING	
	7	1	**8T-6764**	1	PLUG-PIPE	
	8	1	**5M-2894**	10	WASHER-HARD (10.2X18.5X2.5MM THK)	
	9	1	**9S-8752**	26	NUT-FULL (3/8-16 THD)	
	10	1	**108-5803**	2	SEAL-O-RING	
	11	1	**9S-8006**	2	PLUG	
	12	1	**1N-5999**	1	PLUG	
C	13	1	**121-2725**	1	SENSOR GP-PRESSURE (INJECTION ACTUATION)	
		1	*3E-3368*	1	WEDGE-PLUG LOCK	
		1	**8T-8730**	3	SOCKET-CONNECTOR	
BE		1	**9X-1813**		SLEEVE	
		1	**155-2260**	1	KIT-CONNECTING PLUG (3 PIN)	
					INCLUDES PLUG AS AND WEDGE	
	14	1	**124-6625**	1	PLATE	
	15	1	**7W-3447**	16	SPACER (10.2X19.05X10.2MM THK)	
	16	1	**103-6091**	1	SENSOR GP-PRESSURE (BOOST AIR)	
		1	**3E-3368**	1	WEDGE-PLUG LOCK	
		1	**8T-8730**	3	SOCKET-CONNECTOR	
E		1	**9X-1813**		SLEEVE (30CM)	
		1	**102-8808**	1	KIT-CONNECTING PLUG (3 PIN)	
					(INCLUDES PLUG AS & WEDGE)	
		1	**102-8813**	1	SEAL	
	17	1	**9X-0263**	1	ADAPTER	
	18	1	**6V-5048**	1	SEAL-O-RING	
	19	1	**9S-8004**	4	PLUG	
	20	1	**6V-5049**	4	SEAL-O-RING	
	21	1	**2K-2813**	40	BOLT (3/4-16X10IN)	
		1	**5H-1504**	40	WASHER-HARD (20X33.5X5MM THK)	
	22	1	**061-8561**	12	SEAL-O-RING	
	23	1	**6V-5266**	12	SEAL-O-RING	
	24	1	**107-9570**	24	SEAL-O-RING	
	25	1	**108-0219**	12	SLEEVE	
	26	1	**7E-7312**	2	GASKET-CYLINDER HEAD	
	27	1	**2N-7174**	12	GASKET-ADAPTER	
	28	1	**3E-6772**	48	SEAL	
B	29	1	**1U-8846**		SEALANT-GASKET	
	30	1	**033-6027**	2	SEAL-O-RING	
	31	1	**124-6626**	1	PLATE	

B-USE AS REQUIRED
C-CHANGE FROM PREVIOUS TYPE
E-ORDER BY THE CENTIMETER
R-REMFG PART MAY BE AVAILABLE
Y-SEPARATE ILLUSTRATION

127-3513 **CYLINDER HEAD GP** *(contd.)* **i01739611**

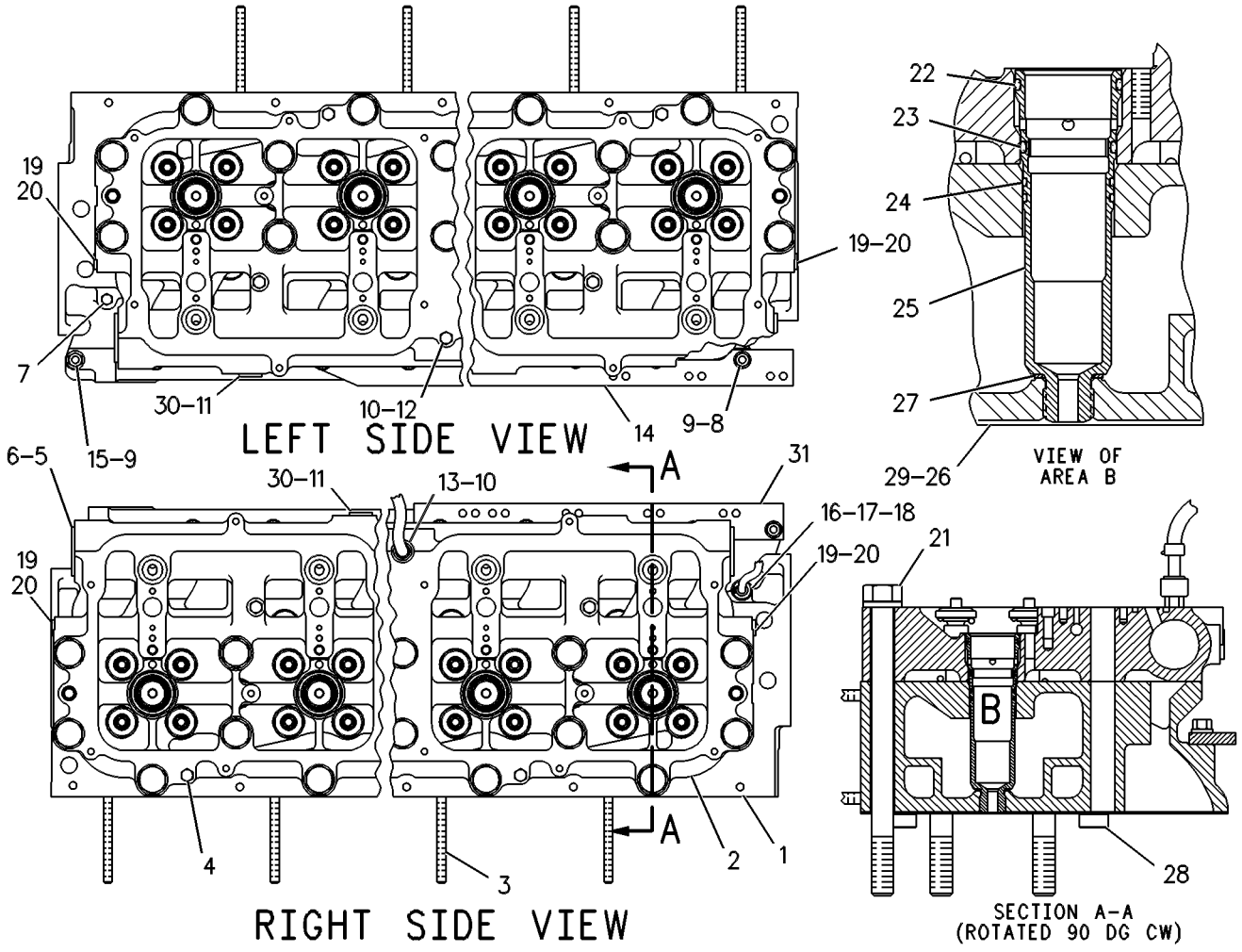

GRAPHIC #1 g00253078

BASIC ENGINE

127-3513 CYLINDER HEAD GP

S/N: 80M599-698
PART OF 115-7641, 135-7810 ENGINE AR
ALSO AN ATTACHMENT

SMCS-1100, 1103, 1104, 1105, 1106, 1108, 1109, 1115, 1117, 1121, 1124, 1125 **i01739555**

NOTE	REF NO	GRAPHIC REF	PART NUMBER	QTY	PART NAME 1 2 3 4 5 6 (PRODUCT LEVEL)	SEE PAGE
YR	1	1	*108-1887*	2	CYLINDER HEAD GP	45
	2	1	**123-4731**	2	MANIFOLD (HEUI FLUID)	
	3	1	**106-1792**	24	STUD-TAPERLOCK (3/8-16X3.93 IN)	
	4	1	**1D-4541**	12	BOLT (5/16-18X3 IN)	
	5	1	**5P-7684**	4	PLUG	
	6	1	**108-5806**	4	SEAL-O-RING	
	7	1	**8T-6764**	1	PLUG-PIPE	
	8	1	**5M-2894**	10	WASHER-HARD (10.2X18.5X2.5MM THK)	
	9	1	**9S-8752**	26	NUT-FULL (3/8-16 THD)	
	10	1	**108-5803**	2	SEAL-O-RING	
	11	1	**9S-8006**	2	PLUG	
	12	1	**1N-5999**	1	PLUG	
CY	13	1	*6V-2485*	1	SENSOR GP-PRESSURE (INJECTION ACTUATION)	453
	14	1	**124-6625**	1	PLATE	
	15	1	**7W-3447**	16	SPACER (10.2X19.05X10.2MM THK)	
	16	1	**103-6091**	1	SENSOR GP-PRESSURE (BOOST AIR)	
		1	**3E-3368**	1	WEDGE-PLUG LOCK	
		1	**8T-8730**	3	SOCKET-CONNECTOR	
BE		1	**9X-1813**		SLEEVE	
		1	**102-8808**	1	KIT-CONNECTING PLUG (3 PIN)	
					(INCLUDES PLUG AS & WEDGE)	
		1	**102-8813**	1	SEAL	
	17	1	**9X-0263**	1	ADAPTER	
	18	1	**6V-5048**	1	SEAL-O-RING	
	19	1	**9S-8004**	4	PLUG	
	20	1	**6V-5049**	4	SEAL-O-RING	
	21	1	**2K-2813**	40	BOLT (3/4-16X10IN)	
		1	**5H-1504**	40	WASHER-HARD (20X33.5X5MM THK)	
	22	1	**061-8561**	12	SEAL-O-RING	
	23	1	**6V-5266**	12	SEAL-O-RING	
	24	1	**107-9570**	24	SEAL-O-RING	
	25	1	**108-0219**	12	SLEEVE	
	26	1	**7E-7312**	2	GASKET-CYLINDER HEAD	
	27	1	**2N-7174**	12	GASKET-ADAPTER	
	28	1	**3E-6772**	48	SEAL	
B	29	1	**1U-8846**		SEALANT-GASKET	
	30	1	**033-6027**	2	SEAL-O-RING	
	31	1	**124-6626**	1	PLATE	

B-USE AS REQUIRED
C-CHANGE FROM PREVIOUS TYPE
E-ORDER BY THE CENTIMETER
R-REMFG PART MAY BE AVAILABLE
Y-SEPARATE ILLUSTRATION

127-3513 **CYLINDER HEAD GP** *(contd.)* **i01739555**

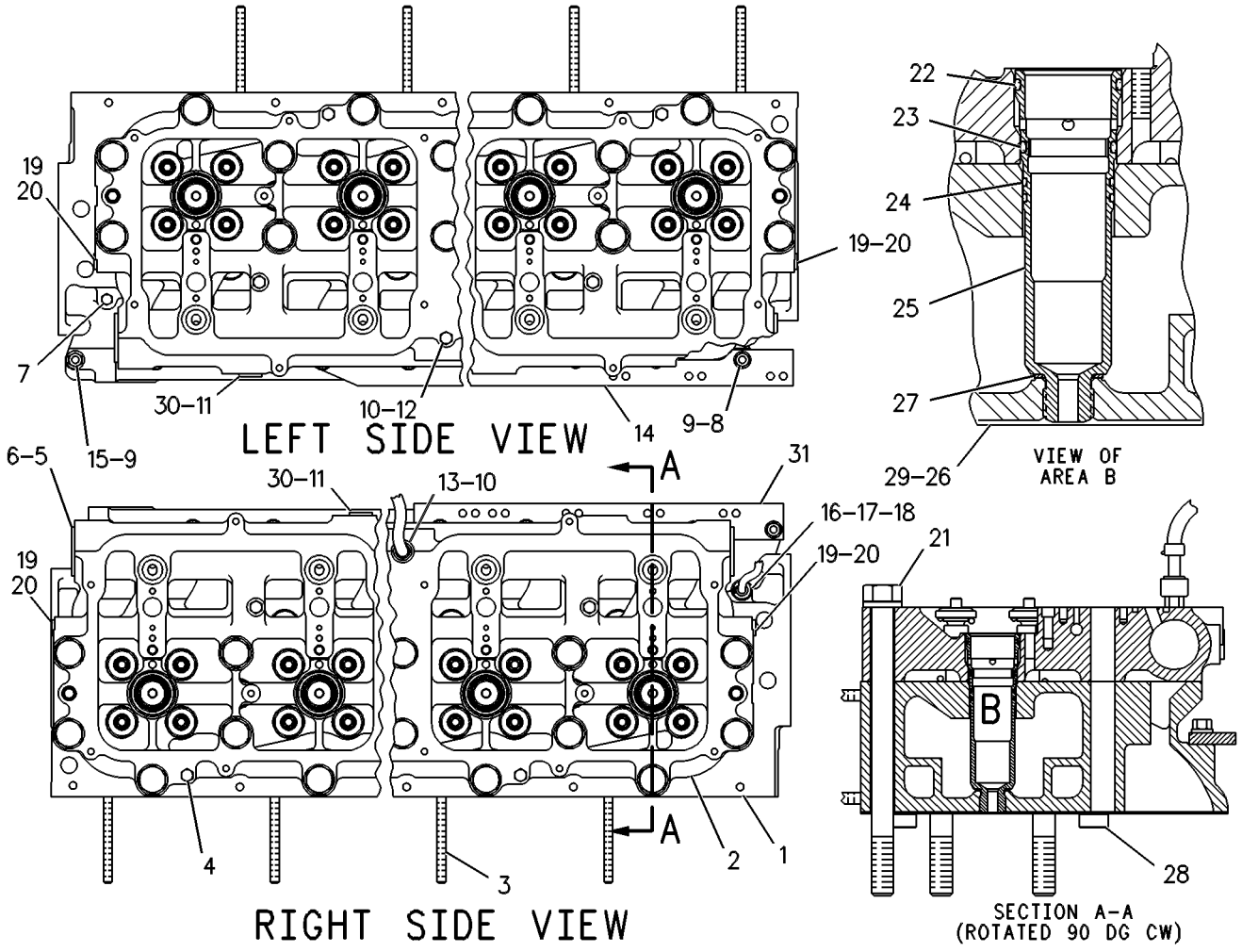

GRAPHIC #1 g00253078

BASIC ENGINE

127-3513 CYLINDER HEAD GP

S/N: 80M699-UP

PART OF 115-7641, 135-7810, 155-0058 ENGINE AR

ALSO AN ATTACHMENT

SMCS-1100, 1103, 1104, 1105, 1106, 1108, 1109, 1115, 1117, 1121, 1124, 1125 **i01739562**

NOTE	REF NO	GRAPHIC REF	PART NUMBER	QTY	PART NAME 1 2 3 4 5 6 (PRODUCT LEVEL)	SEE PAGE
YR	1	1	*108-1887*	2	CYLINDER HEAD GP	45
C	2	1	**141-6607**	2	MANIFOLD (HEUI FLUID)	
	3	1	**106-1792**	24	STUD-TAPERLOCK (3/8-16X3.93 IN)	
	4	1	**1D-4541**	12	BOLT (5/16-18X3 IN)	
	5	1	**5P-7684**	4	PLUG	
	6	1	**108-5806**	4	SEAL-O-RING	
	7	1	**8T-6764**	1	PLUG-PIPE	
	8	1	**5M-2894**	10	WASHER-HARD (10.2X18.5X2.5MM THK)	
	9	1	**9S-8752**	26	NUT-FULL (3/8-16 THD)	
	10	1	**108-5803**	2	SEAL-O-RING	
	11	1	**9S-8006**	2	PLUG	
	12	1	**1N-5999**	1	PLUG	
CY	13	1	**167-1709**	1	SENSOR GP-PRESSURE (INJECTION ACTUATION)	459
	14	1	**124-6625**	1	PLATE	
	15	1	**7W-3447**	16	SPACER (10.2X19.05X10.2MM THK)	
CY	16	1	**194-6724**	1	SENSOR GP-PRESSURE (BOOST AIR)	461
	17	1	**9X-0263**	1	ADAPTER	
	18	1	**6V-5048**	1	SEAL-O-RING	
	19	1	**9S-8004**	4	PLUG	
	20	1	**6V-5049**	4	SEAL-O-RING	
	21	1	**2K-2813**	40	BOLT (3/4-16X10IN)	
		1	**5H-1504**	40	WASHER-HARD (20X33.5X5MM THK)	
	22	1	**061-8561**	12	SEAL-O-RING	
	23	1	**6V-5266**	12	SEAL-O-RING	
	24	1	**107-9570**	24	SEAL-O-RING	
	25	1	**108-0219**	12	SLEEVE	
	26	1	**7E-7312**	2	GASKET-CYLINDER HEAD	
	27	1	**2N-7174**	12	GASKET-ADAPTER	
	28	1	**3E-6772**	48	SEAL	
B	29	1	**1U-8846**		SEALANT-GASKET	
	30	1	**033-6027**	2	SEAL-O-RING	
	31	1	**124-6626**	1	PLATE	

B-USE AS REQUIRED
C-CHANGE FROM PREVIOUS TYPE
R-REMFG PART MAY BE AVAILABLE
Y-SEPARATE ILLUSTRATION

127-3513 **CYLINDER HEAD GP** *(contd.)* **i01739562**

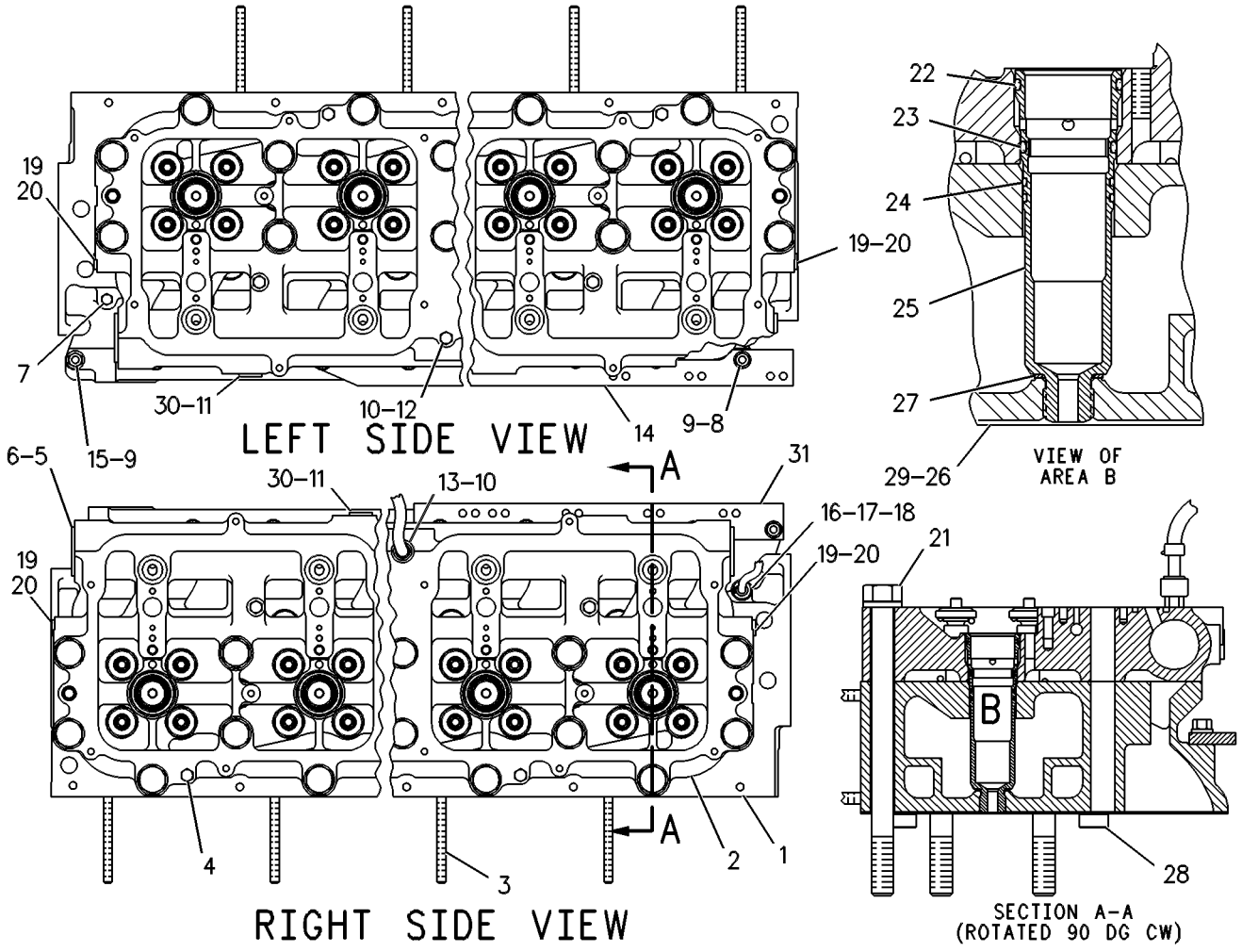

GRAPHIC #1 g00253078

BASIC ENGINE

6N-2229 DAMPER GP

S/N: 80M1-UP
PART OF 115-7641, 135-7810, 155-0058 ENGINE AR
ALSO AN ATTACHMENT

SMCS-1205 **i01263332**

NOTE	REF NO	GRAPHIC REF	PART NUMBER	QTY	PART NAME 1 2 3 4 5 6 (PRODUCT LEVEL)	SEE PAGE
	1	1	**6N-6037**	1	ADAPTER-DAMPER	
	2	1	**2D-6374**	8	BOLT (5/8-18X6.75IN)	
	3	1	**0S-1585**	12	BOLT (1/2-13X1.50IN)	
	4	1	**6N-7654**	1	SPACER	
	5	1	**167-8132**	1	DAMPER AS	

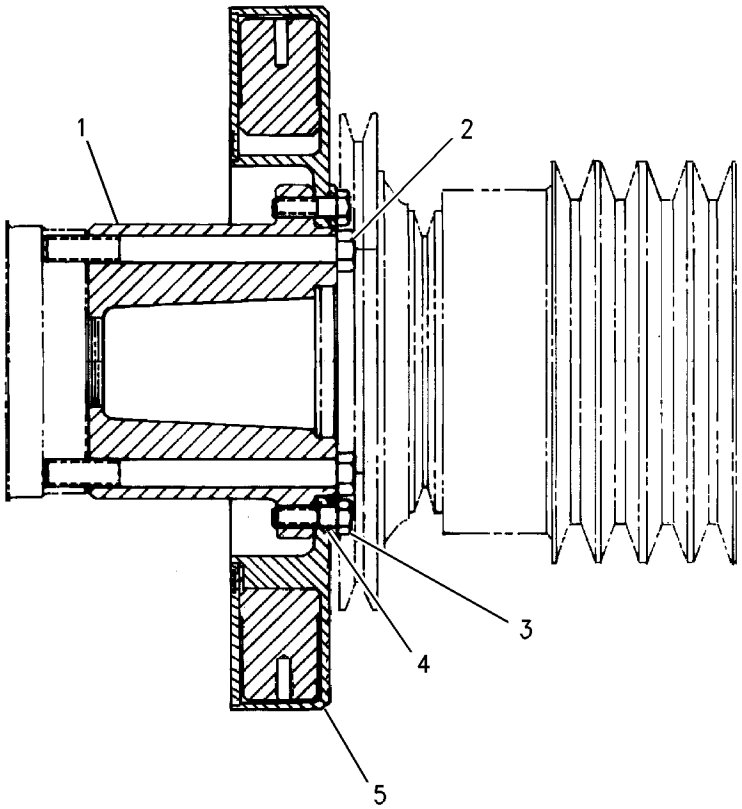

GRAPHIC #1 g00672248

BASIC ENGINE

123-5886 DRIVE GP-FAN

S/N: 3KR1-734

SMCS-1357, 1358, 1359, 1390 **i01400329**

NOTE	REF NO	GRAPHIC REF	PART NUMBER	QTY	PART NAME 1 2 3 4 5 6 (PRODUCT LEVEL)	SEE PAGE
	1	1	**120-0158**	1	PULLEY	
Y	2	1	**123-6968**	1	DRIVE GP-FAN	60
	3	1	**5M-1932**	4	STUD-TAPERLOCK	
	4	1	**6V-8188**	6	NUT (1/2-13 THD)	
	5	1	**9B-7237**	6	BOLT (3/8-16X1.25 IN)	
	6	1	**123-5888**	1	BRACKET AS	
		1	**1S-9209**	1	SHAFT-TIGHTENER	
		1	**4N-0955**	1	DOWEL	
	7	1	**118-6330**	2	STUD	
	8	1	**8T-4223**	4	WASHER-HARD (13.5X25.5X3MM THK)	
	9	1	**123-5889**	1	V-BELT SET (INCLUDES 4 BELTS)	
	10	1	**8T-4835**	2	BOLT (1/2-13X2 IN)	

Y-SEPARATE ILLUSTRATION

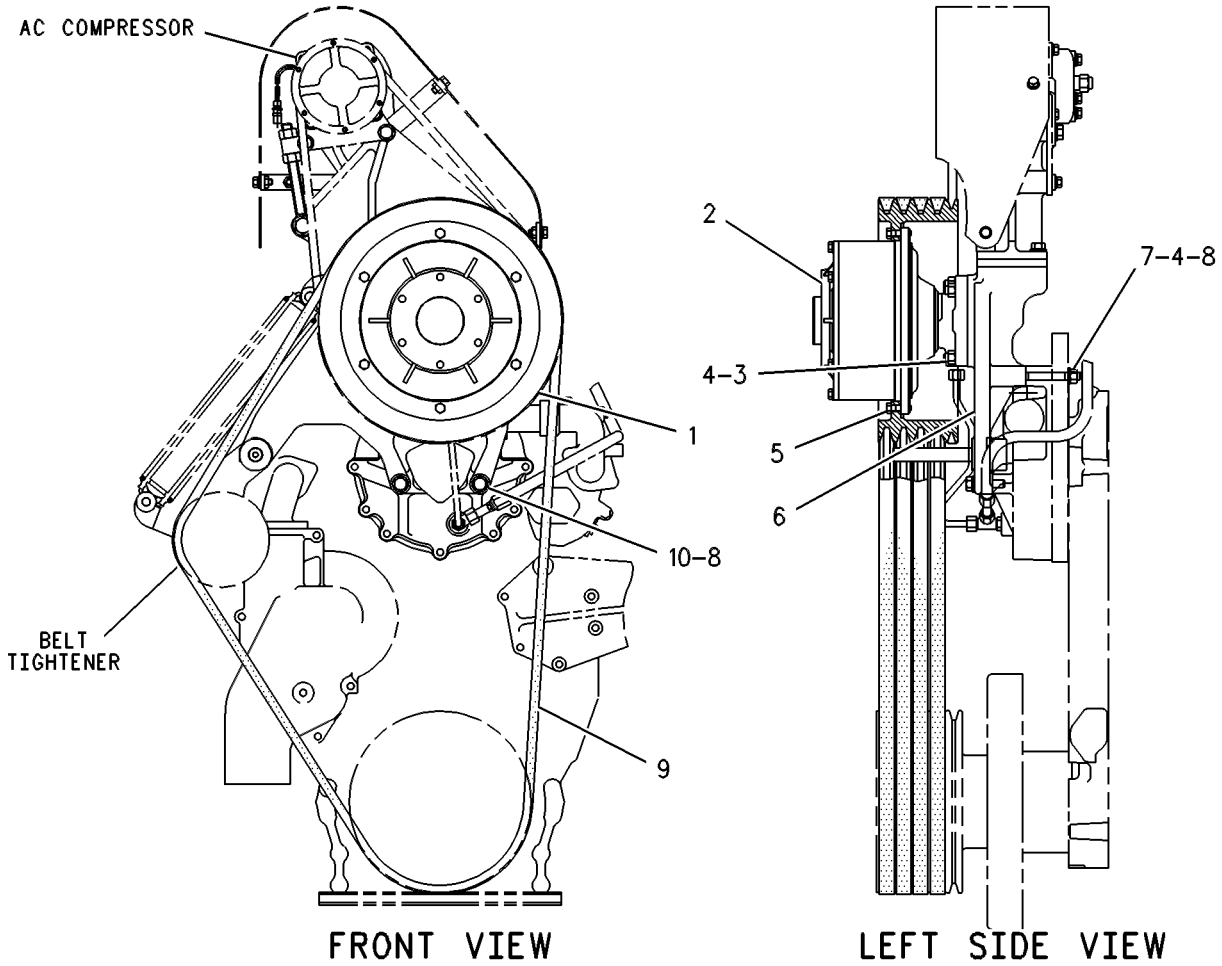

GRAPHIC #1 g00253441

BASIC ENGINE

123-5886 DRIVE GP-FAN

S/N: 3KR735-968

SMCS-1357, 1358, 1359, 1390 **i01400331**

NOTE	REF NO	GRAPHIC REF	PART NUMBER	QTY	PART NAME 1 2 3 4 5 6 (PRODUCT LEVEL)	SEE PAGE
	1	1	**120-0158**	1	PULLEY	
YC	2	1	*136-7609*	1	DRIVE GP-FAN	61
	3	1	**5M-1932**	4	STUD-TAPERLOCK	
	4	1	**6V-8188**	6	NUT (1/2-13 THD)	
	5	1	**9B-7237**	6	BOLT (3/8-16X1.25 IN)	
	6	1	**123-5888**	1	BRACKET AS	
		1	**1S-9209**	1	SHAFT-TIGHTENER	
		1	**4N-0955**	1	DOWEL	
	7	1	**118-6330**	2	STUD	
	8	1	**8T-4223**	4	WASHER-HARD (13.5X25.5X3MM THK)	
	9	1	**123-5889**	1	V-BELT SET (INCLUDES 4 BELTS)	
	10	1	**8T-4835**	2	BOLT (1/2-13X2 IN)	

C-CHANGE FROM PREVIOUS TYPE
Y-SEPARATE ILLUSTRATION

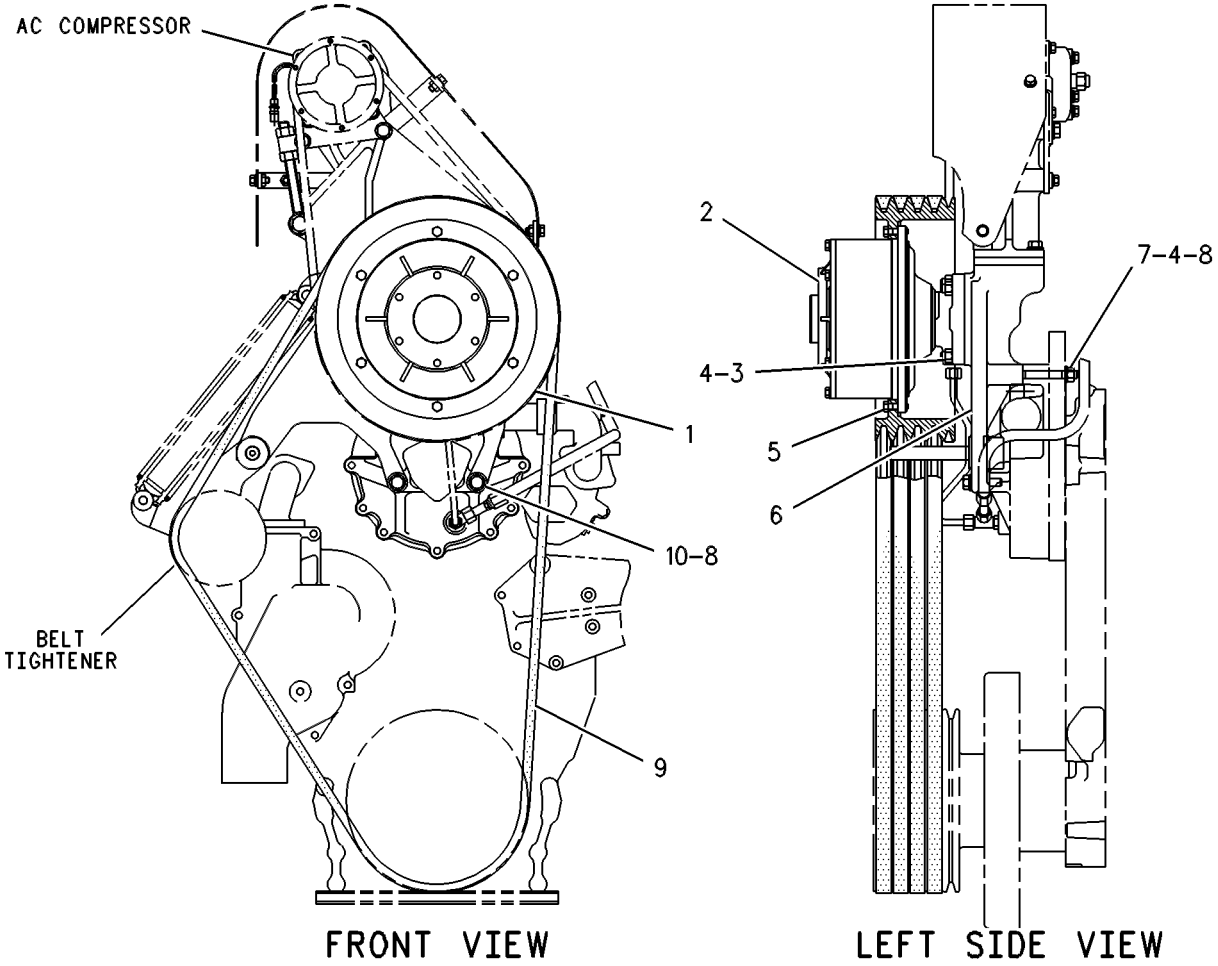

GRAPHIC #1 g00253441

BASIC ENGINE

123-5886 DRIVE GP-FAN

S/N: 3KR969-1158

SMCS-1357, 1358, 1359, 1390 **i01400333**

NOTE	REF NO	GRAPHIC REF	PART NUMBER	QTY	PART NAME 1 2 3 4 5 6 (PRODUCT LEVEL)	SEE PAGE
	1	1	**120-0158**	1	PULLEY	
YC	2	1	**123-6968**	1	DRIVE GP-FAN	60
	3	1	**5M-1932**	4	STUD-TAPERLOCK	
	4	1	**6V-8188**	6	NUT (1/2-13 THD)	
	5	1	**9B-7237**	6	BOLT (3/8-16X1.25 IN)	
	6	1	**123-5888**	1	BRACKET AS	
		1	**1S-9209**	1	SHAFT-TIGHTENER	
		1	**4N-0955**	1	DOWEL	
	7	1	**118-6330**	2	STUD	
	8	1	**8T-4223**	4	WASHER-HARD (13.5X25.5X3MM THK)	
	9	1	**123-5889**	1	V-BELT SET (INCLUDES 4 BELTS)	
	10	1	**8T-4835**	2	BOLT (1/2-13X2 IN)	

C-CHANGE FROM PREVIOUS TYPE
Y-SEPARATE ILLUSTRATION

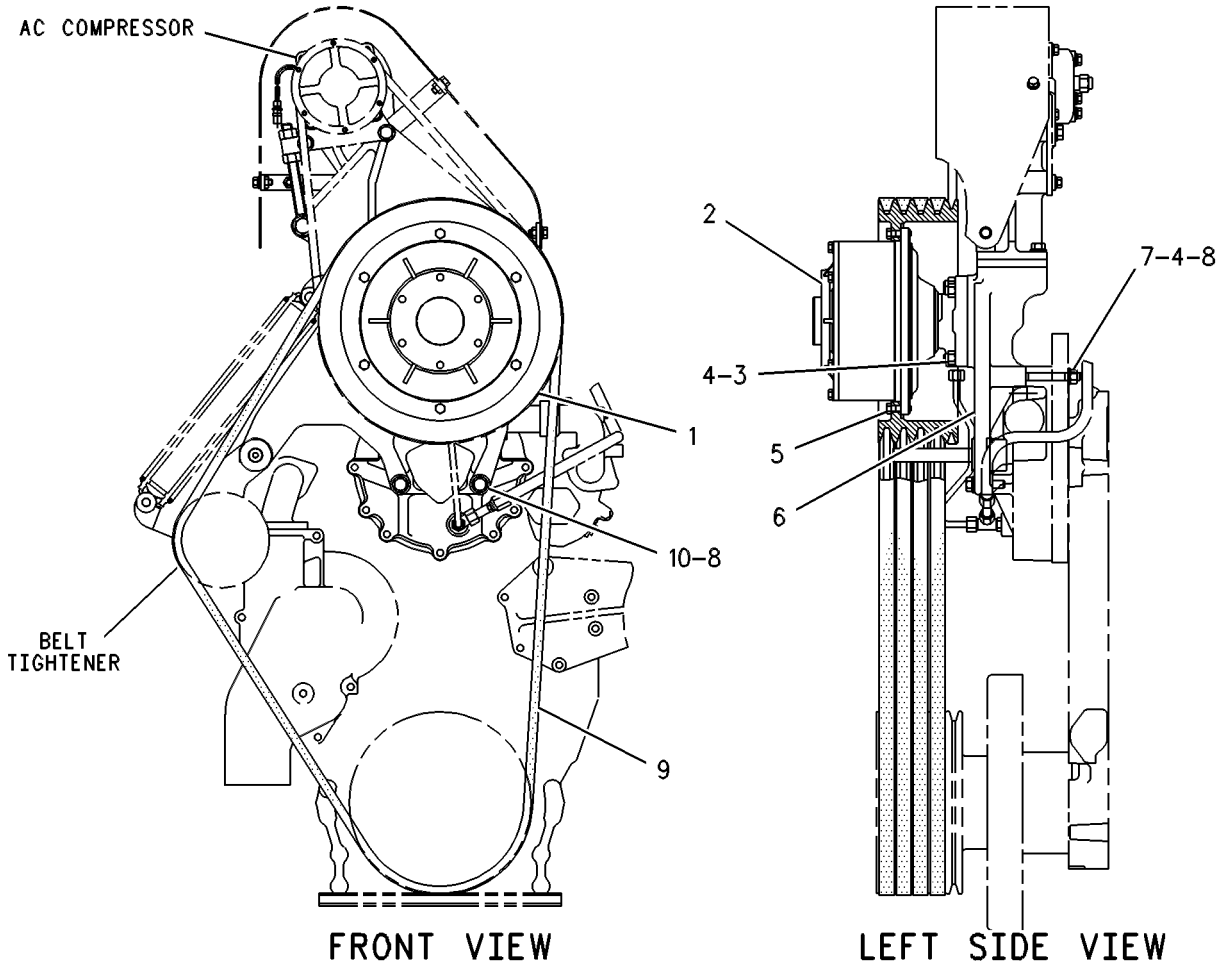

GRAPHIC #1 g00253441

BASIC ENGINE

123-6968 DRIVE GP-FAN

S/N: 3KR1-734, 969-1293, 1327-1364

PART OF 123-5886, 146-6924 DRIVE GP-FAN

SMCS-1357, 1358, 1359, 1390 **i01486350**

NOTE	REF NO	GRAPHIC REF	PART NUMBER	QTY	PART NAME 1 2 3 4 5 6 (PRODUCT LEVEL)	SEE PAGE
Y	1	1	**119-4166**	1	SENSOR GP-SPEED (FAN)	463
					AVAILABLE REPAIR KIT(S):	
			121-5756		KIT-SEAL	
					(INCLUDES RINGS, SEALS, SLEEVES, WASHER, SHIM & NAMEPLATE KIT)	
			121-5767		KIT-OVERHAUL	
					(INCLUDES WOODRUFF KEY, RETAINER, SEAL KIT, RINGS, & BEARINGS)	

Y-SEPARATE ILLUSTRATION

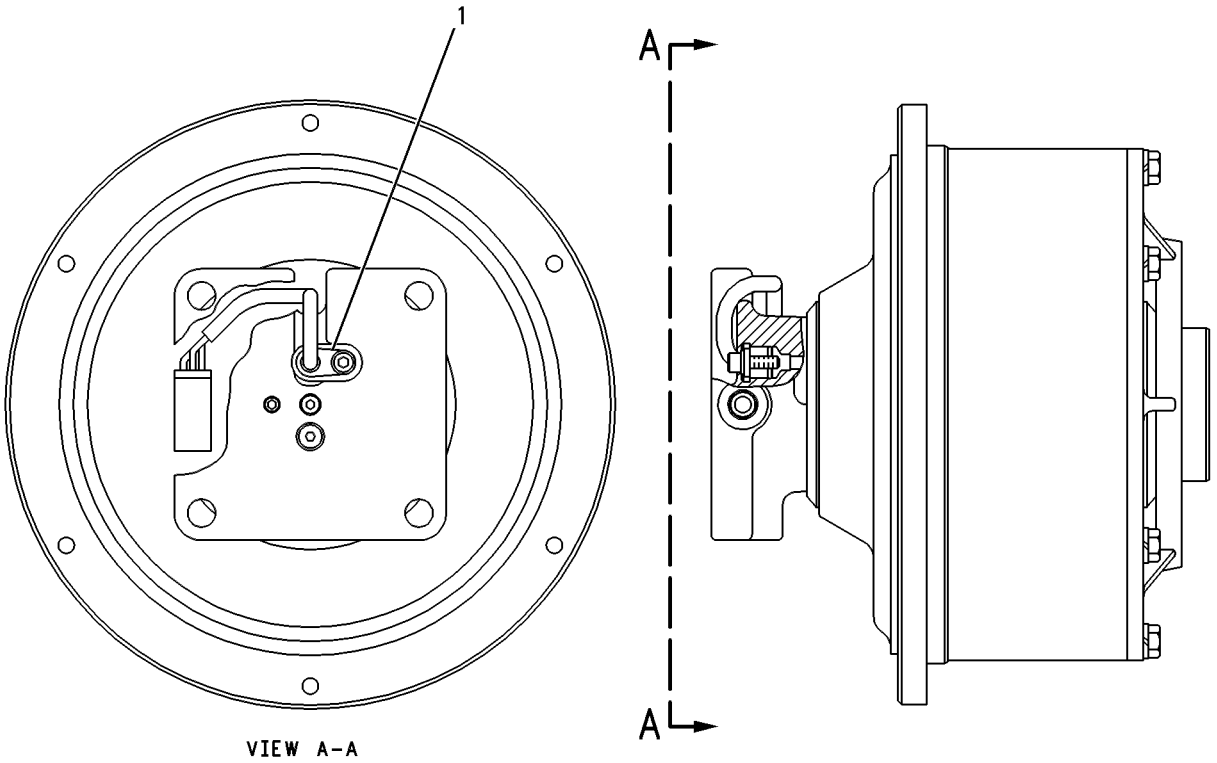

GRAPHIC #1 g00087022

BASIC ENGINE

136-7609 DRIVE GP-FAN

S/N: 3KR735-956, 959-968

PART OF 123-5886 DRIVE GP-FAN

SMCS-1357, 1358, 1359, 1390 **i00601511**

NOTE	REF NO	GRAPHIC REF	PART NUMBER	QTY	PART NAME 1 2 3 4 5 6 (PRODUCT LEVEL)	SEE PAGE
Y	1	1	**119-4166**	1	SENSOR GP-ELECTRONIC SPEED	463
					AVAILABLE REPAIR KIT(S):	
			141-9853	1	KIT-SEAL	
					(INCL SLEEVES, SEALS, O-RINGS, BALANCE PLATE, AND NAMEPLATE KIT)	
			141-9854	1	KIT-OVERHAUL	
					(INCL BEARINGS, PLATES, SNAP RINGS, SEAL KIT, WOODRUFF KEYS, AND COMPRESSION SPRING)	

Y-SEPARATE ILLUSTRATION

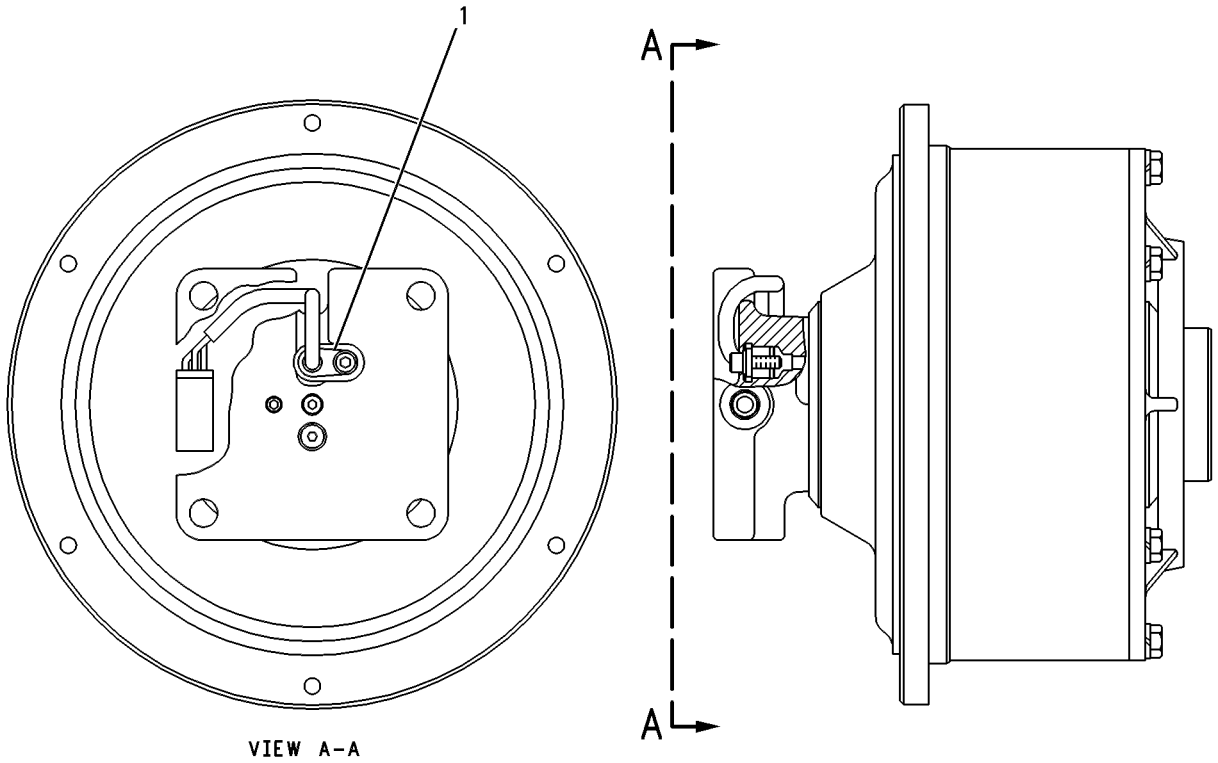

GRAPHIC #1 g00087022

BASIC ENGINE

146-6924 DRIVE GP-FAN

S/N: 3KR1159-1293

SMCS-1357, 1358, 1359, 1390 **i01400358**

NOTE	REF NO	GRAPHIC REF	PART NUMBER	QTY	PART NAME 1 2 3 4 5 6 (PRODUCT LEVEL)	SEE PAGE
	1	1	**150-1960**	1	PULLEY	
Y	2	1	**123-6968**	1	DRIVE GP-FAN	60
	3	1	**5M-1932**	4	STUD-TAPERLOCK	
	4	1	**6V-8188**	6	NUT (1/2-13 THD)	
	5	1	**9B-7237**	6	BOLT (3/8-16X1.25 IN)	
	6	1	**142-6921**	1	BRACKET AS	
		1	**1S-9209**	1	SHAFT-TIGHTENER	
		1	**4N-0955**	1	DOWEL	
	7	1	**118-6330**	2	STUD	
	8	1	**8T-4223**	4	WASHER-HARD (13.5X25.5X3MM THK)	
	9	1	**123-5889**	1	V-BELT SET (INCLUDES 4 BELTS)	
	10	1	**8T-4835**	2	BOLT (1/2-13X2 IN)	

Y-SEPARATE ILLUSTRATION

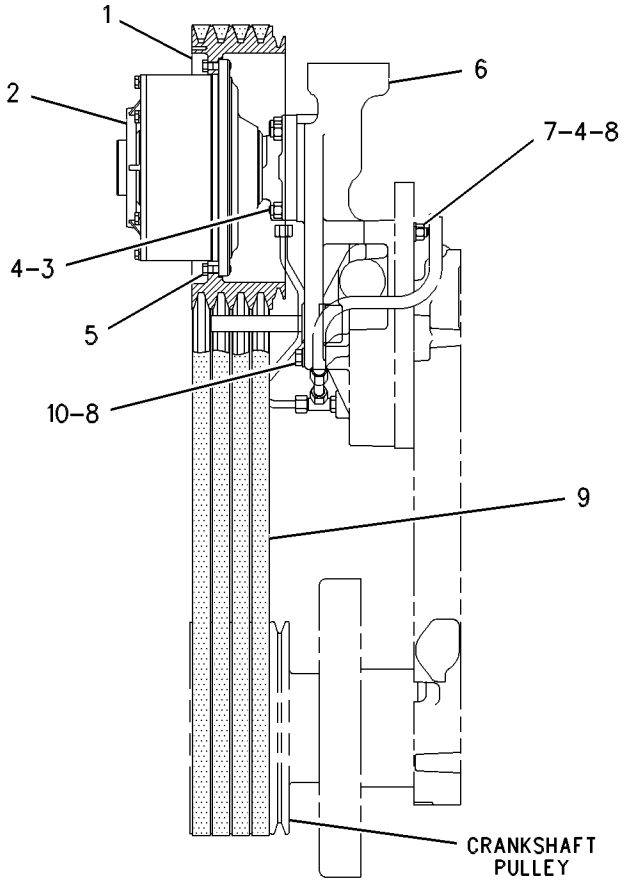

LEFT SIDE VIEW

GRAPHIC #1 g00555902

BASIC ENGINE

146-6924 DRIVE GP-FAN

S/N: 3KR1294-1326

SMCS-1357, 1358, 1359, 1390 **i01400360**

NOTE	REF NO	GRAPHIC REF	PART NUMBER	QTY	PART NAME 1 2 3 4 5 6 (PRODUCT LEVEL)	SEE PAGE
	1	1	**150-1960**	1	PULLEY	
CY	2	1	**161-9862**	1	DRIVE GP-FAN	67
	3	1	**5M-1932**	4	STUD-TAPERLOCK	
	4	1	**6V-8188**	6	NUT (1/2-13 THD)	
	5	1	**9B-7237**	6	BOLT (3/8-16X1.25 IN)	
	6	1	**142-6921**	1	BRACKET AS	
		1	**1S-9209**	1	SHAFT-TIGHTENER	
		1	**4N-0955**	1	DOWEL	
	7	1	**118-6330**	2	STUD	
	8	1	**8T-4223**	4	WASHER-HARD (13.5X25.5X3MM THK)	
	9	1	**123-5889**	1	V-BELT SET (INCLUDES 4 BELTS)	
	10	1	**8T-4835**	2	BOLT (1/2-13X2 IN)	

C-CHANGE FROM PREVIOUS TYPE
Y-SEPARATE ILLUSTRATION

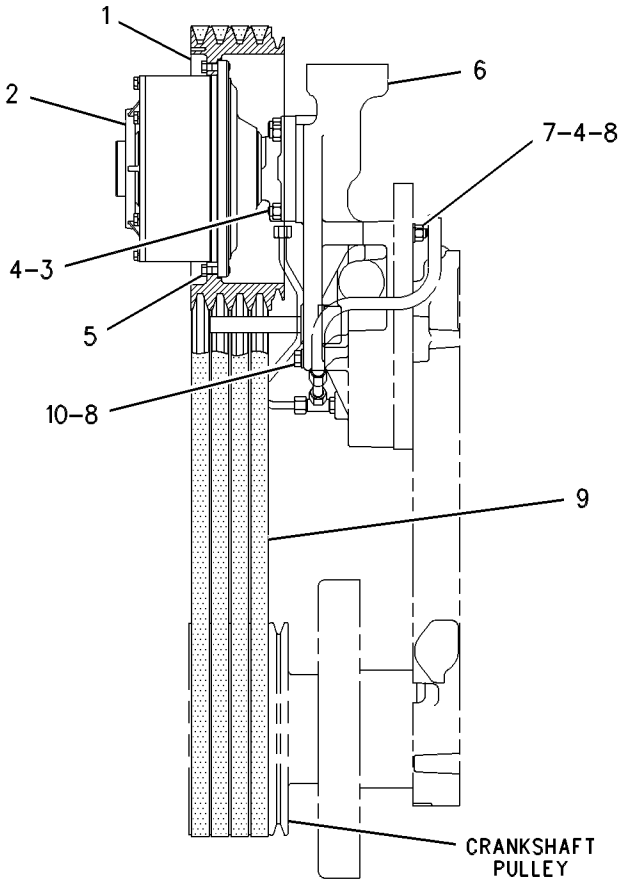

LEFT SIDE VIEW

GRAPHIC #1 g00555902

BASIC ENGINE

146-6924 DRIVE GP-FAN

S/N: 3KR1327-1364

SMCS-1357, 1358, 1359, 1390 **i01400363**

NOTE	REF NO	GRAPHIC REF	PART NUMBER	QTY	PART NAME 1 2 3 4 5 6 (PRODUCT LEVEL)	SEE PAGE
	1	1	**150-1960**	1	PULLEY	
CY	2	1	**123-6968**	1	DRIVE GP-FAN	60
	3	1	**5M-1932**	4	STUD-TAPERLOCK	
	4	1	**6V-8188**	6	NUT (1/2-13 THD)	
	5	1	**9B-7237**	6	BOLT (3/8-16X1.25 IN)	
	6	1	**142-6921**	1	BRACKET AS	
		1	**1S-9209**	1	SHAFT-TIGHTENER	
		1	**4N-0955**	1	DOWEL	
	7	1	**118-6330**	2	STUD	
	8	1	**8T-4223**	4	WASHER-HARD (13.5X25.5X3MM THK)	
	9	1	**123-5889**	1	V-BELT SET (INCLUDES 4 BELTS)	
	10	1	**8T-4835**	2	BOLT (1/2-13X2 IN)	

C-CHANGE FROM PREVIOUS TYPE
Y-SEPARATE ILLUSTRATION

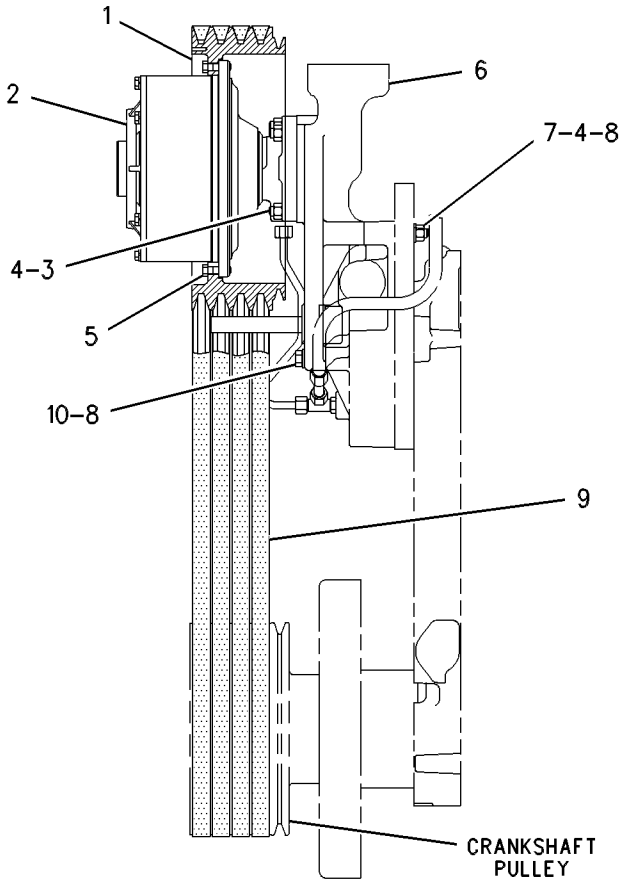

LEFT SIDE VIEW

GRAPHIC #1 g00555902

BASIC ENGINE

146-6924 DRIVE GP-FAN

S/N: 3KR1365-1410
PART OF 180-6632 SUPPRESSION AR-SOUND
ALSO AN ATTACHMENT

SMCS-1357, 1358, 1359, 1390 **i01400364**

NOTE	REF NO	GRAPHIC REF	PART NUMBER	QTY	PART NAME 1 2 3 4 5 6 (PRODUCT LEVEL)	SEE PAGE
	1	1	**150-1960**	1	PULLEY	
CY	2	1	**178-9300**	1	DRIVE GP-FAN	68
	3	1	**5M-1932**	4	STUD-TAPERLOCK	
	4	1	**6V-8188**	6	NUT (1/2-13 THD)	
	5	1	**9B-7237**	6	BOLT (3/8-16X1.25 IN)	
	6	1	**142-6921**	1	BRACKET AS	
		1	**1S-9209**	1	SHAFT-TIGHTENER	
		1	**4N-0955**	1	DOWEL	
	7	1	**118-6330**	2	STUD	
	8	1	**8T-4223**	4	WASHER-HARD (13.5X25.5X3MM THK)	
	9	1	**123-5889**	1	V-BELT SET (INCLUDES 4 BELTS)	
	10	1	**8T-4835**	2	BOLT (1/2-13X2 IN)	

C-CHANGE FROM PREVIOUS TYPE
Y-SEPARATE ILLUSTRATION

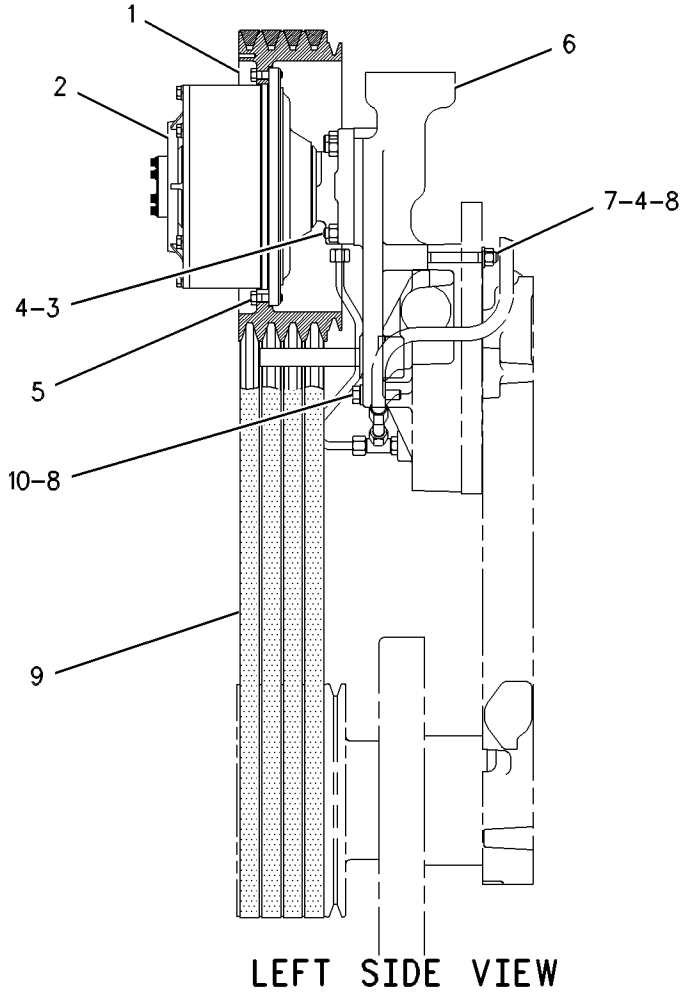

GRAPHIC #1 g00638326

BASIC ENGINE

146-6924 DRIVE GP-FAN

S/N: 3KR1482-1604
PART OF 180-6632 SUPPRESSION AR-SOUND
AN ATTACHMENT

SMCS-1357, 1358, 1359, 1390 **i01400368**

NOTE	REF NO	GRAPHIC REF	PART NUMBER	QTY	PART NAME 1 2 3 4 5 6 (PRODUCT LEVEL)	SEE PAGE
	1	1	**150-1960**	1	PULLEY	
CY	2	1	**183-5116**	1	DRIVE GP-FAN	72
	3	1	**5M-1932**	4	STUD-TAPERLOCK	
	4	1	**6V-8188**	6	NUT (1/2-13 THD)	
	5	1	**9B-7237**	6	BOLT (3/8-16X1.25 IN)	
	6	1	**142-6921**	1	BRACKET AS	
		1	**1S-9209**	1	SHAFT-TIGHTENER	
		1	**4N-0955**	1	DOWEL	
	7	1	**118-6330**	2	STUD	
	8	1	**8T-4223**	4	WASHER-HARD (13.5X25.5X3MM THK)	
	9	1	**123-5889**	1	V-BELT SET (INCLUDES 4 BELTS)	
	10	1	**8T-4835**	2	BOLT (1/2-13X2 IN)	

C-CHANGE FROM PREVIOUS TYPE
Y-SEPARATE ILLUSTRATION

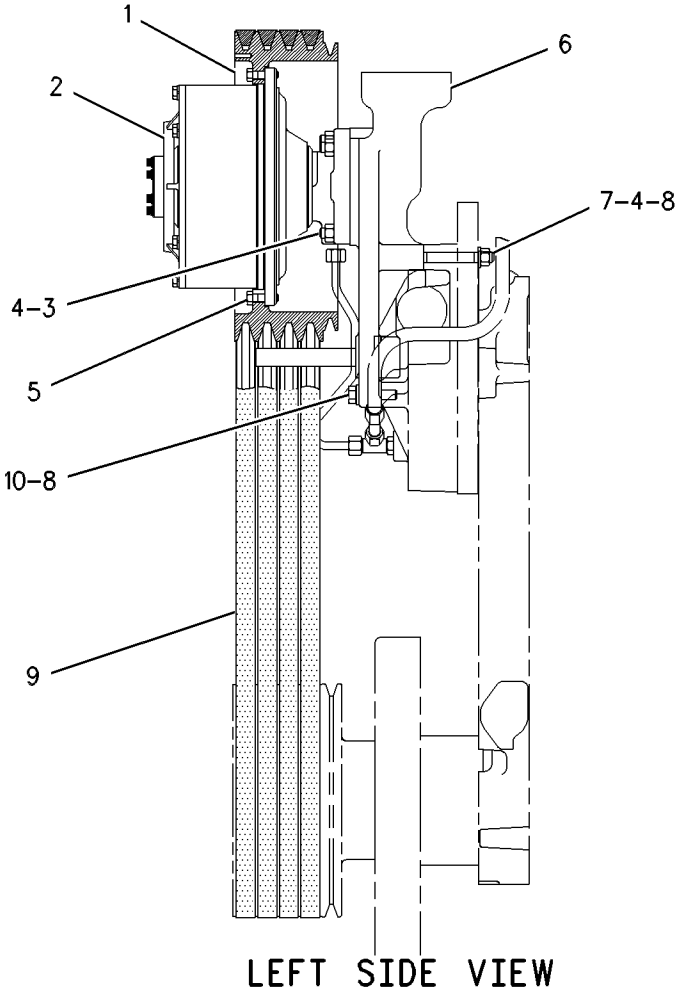

GRAPHIC #1 g00638326

BASIC ENGINE

161-9862 DRIVE GP-FAN

S/N: 3KR1294-1326

PART OF 146-6924 DRIVE GP-FAN

SMCS-1357, 1358, 1359, 1390 **i01082675**

NOTE	REF NO	GRAPHIC REF	PART NUMBER	QTY	PART NAME 1 2 3 4 5 6 (PRODUCT LEVEL)	SEE PAGE
Y	1	1	**119-4166**	1	SENSOR GP-SPEED	463
					AVAILABLE REPAIR KIT(S):	
N			**161-9863**	1	KIT-SEAL	
					(INCLUDES WEAR SLEEVES, SEALS, RETAINER, RINGS & PLATE)	
N			**161-9864**	1	KIT-OVERHAUL	
					(INCLUDES BEARINGS, PLATES, KEY AND SNAP RINGS)	

N-NEW PART
Y-SEPARATE ILLUSTRATION

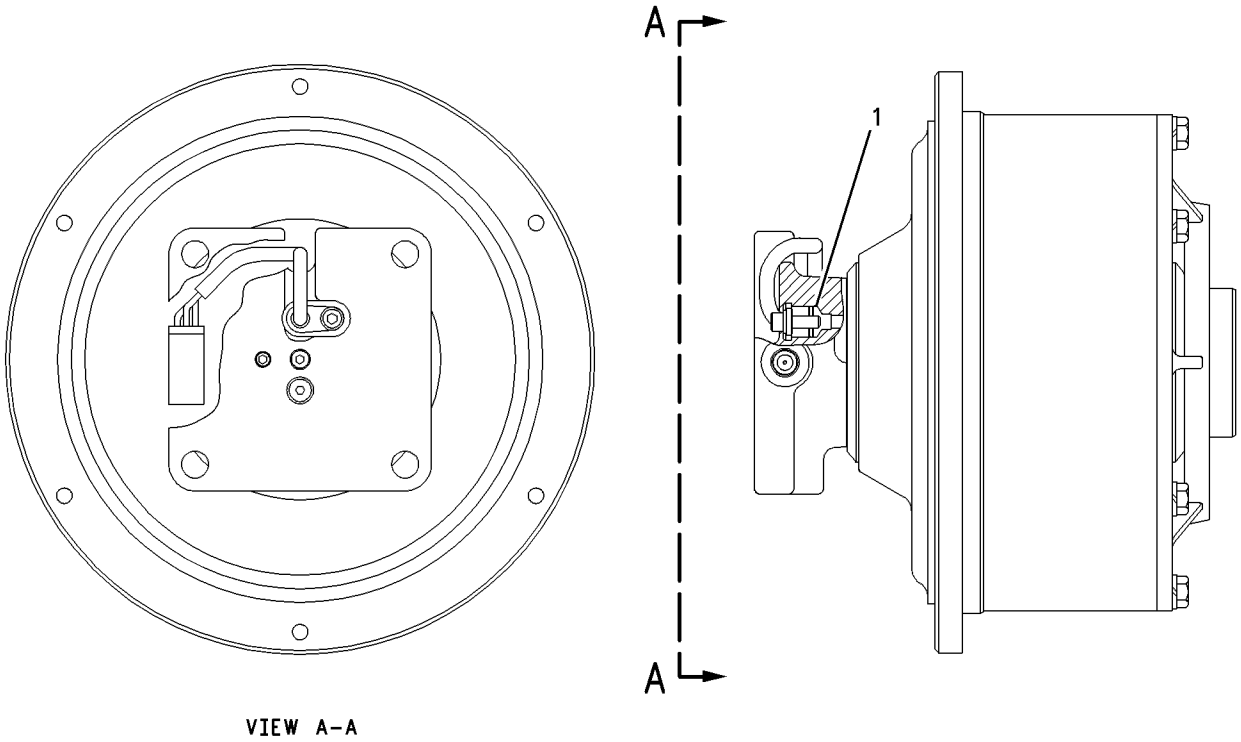

GRAPHIC #1 g00569576

BASIC ENGINE

178-9300 DRIVE GP-FAN

S/N: 3KR1365-1410
PART OF 146-6924 DRIVE GP-FAN
ALSO AN ATTACHMENT

SMCS-1357, 1358, 1359, 1390 **i01192888**

NOTE	REF NO	GRAPHIC REF	PART NUMBER	QTY	PART NAME 1 2 3 4 5 6 (PRODUCT LEVEL)	SEE PAGE
Y	1	1	**119-4166**	1	SENSOR GP-SPEED	463
					AVAILABLE REPAIR KIT(S):	
			178-9523	1	KIT-SEAL	
					(INCLUDES WEAR SLEEVES, SEALS, SEAL RINGS, & RETAINERS)	
			178-9524	1	KIT-OVERHAUL	
					(INCLUDES SEAL KIT, BEARINGS, SNAP RINGS, KEYS, & WASHERS)	

Y-SEPARATE ILLUSTRATION

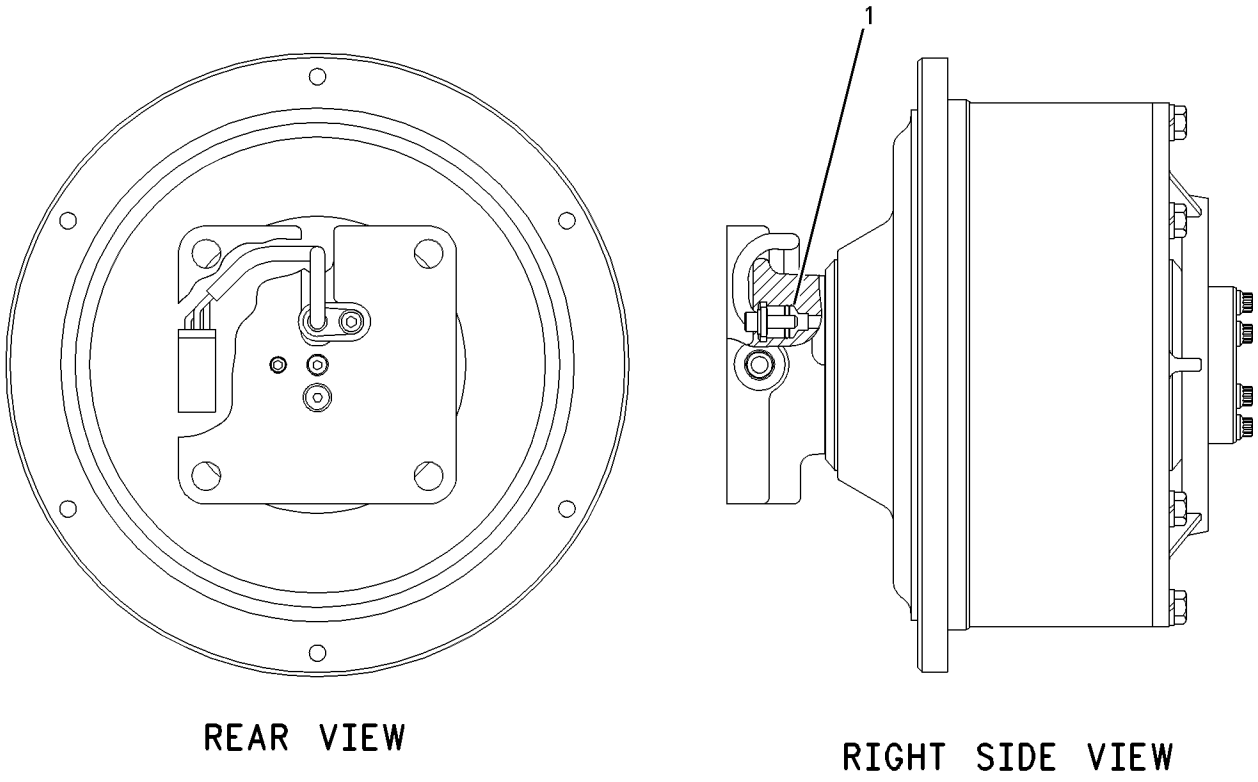

GRAPHIC #1 g00638328

MEMORANDA

BASIC ENGINE

180-3397 DRIVE GP-FAN

S/N: 3KR1411-1604

SMCS-1357, 1358, 1359, 1390 **i01400372**

NOTE	REF NO	GRAPHIC REF	PART NUMBER	QTY	PART NAME 1 2 3 4 5 6 (PRODUCT LEVEL)	SEE PAGE
	1	1	**3B-8485**	1	FITTING-GREASE	
	2	1	**5K-3772**	1	HOSE AS	
	3	1	**5M-8009**	1	PIN-SPRING	
	4	1	**5P-4625**	1	BOLT (5/8-11 THD)	
	5	1	**6I-0976**	1	SLEEVE	
	6	1	**6I-0977**	1	SPACER	
	7	1	**6I-1684**	1	PLATE	
	8	1	**6Y-7651**	2	CONE-ROLLER BEARING	
	9	1	**6Y-7652**	2	CUP-ROLLER BEARING	
	10	1	**150-1960**	1	PULLEY	
	11	1	**153-3699**	1	BRACKET AS	
	12	1	**164-5025**	1	ADAPTER	
	13	1	**164-5028**	1	BRACKET AS	
		1	**1S-9209**	1	SHAFT-TIGHTENER	
		1	**4N-0955**	1	DOWEL	
	13A	1	**6I-0975**	1	SHAFT	
	14	1	**180-4526**	1	V-BELT SET (INCLUDES 4 BELTS)	
	15	1	**180-9639**	1	HUB	
	16	1	**118-6330**	2	STUD	
	17	1	**5F-3999**	1	SEAL-O-RING (123.42MM ID)	
	18	1	**6V-8188**	2	NUT (1/2-13 THD)	
	19	1	**8C-5222**	1	SEAL-LIP	
	20	1	**8T-4223**	4	WASHER-HARD (13.5X25.5X3MM THK)	
	21	1	**7X-0328**	2	BOLT (1/2-13X3.50 IN)	
	22	1	**8T-4896**	4	WASHER-HARD (10.2X18.5X2.5MM THK)	
	23	1	**8T-8917**	6	BOLT (1/2-13X1.25 IN)	
	24	1	**9B-7237**	10	BOLT (3/8-16X1.25 IN)	

180-3397 **DRIVE GP-FAN** *(contd.)* **i01400372**

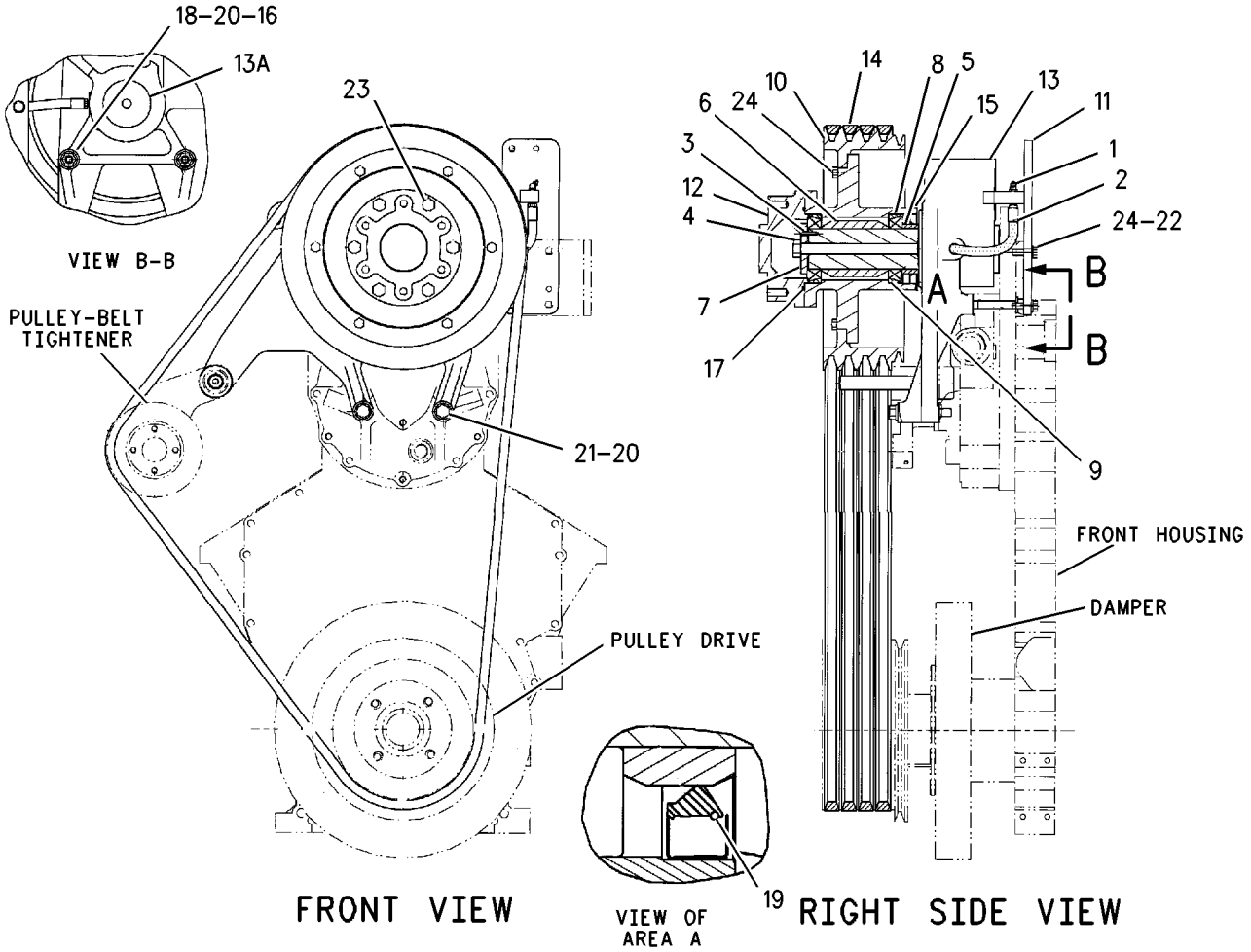

GRAPHIC #1 g00682467

BASIC ENGINE

183-5116 DRIVE GP-FAN

S/N: 3KR1-UP
PART OF 146-6924, 192-6156 DRIVE GP-FAN
AN ATTACHMENT

SMCS-1357, 1358, 1359, 1390 **i01446345**

NOTE	REF NO	GRAPHIC REF	PART NUMBER	QTY	PART NAME 1 2 3 4 5 6 (PRODUCT LEVEL)	SEE PAGE
Y	1	1	**119-4166**	1	SENSOR GP-SPEED (FAN)	463
					AVAILABLE REPAIR KIT(S):	
			188-3548		KIT-SEAL	
					(INCLUDES SLEEVES, SEALS, O-RINGS, NAMEPLATE KIT, PLATE, RETAINERS & INSTRUCTION SHEET)	
			188-3549		KIT-OVERHAUL	
					(INCLUDES SEAL KIT, BEARINGS, KEYS, RINGS-SNAP, CLUTCH PLATES, FACING PLATES & SPRING WASHER)	

Y-SEPARATE ILLUSTRATION

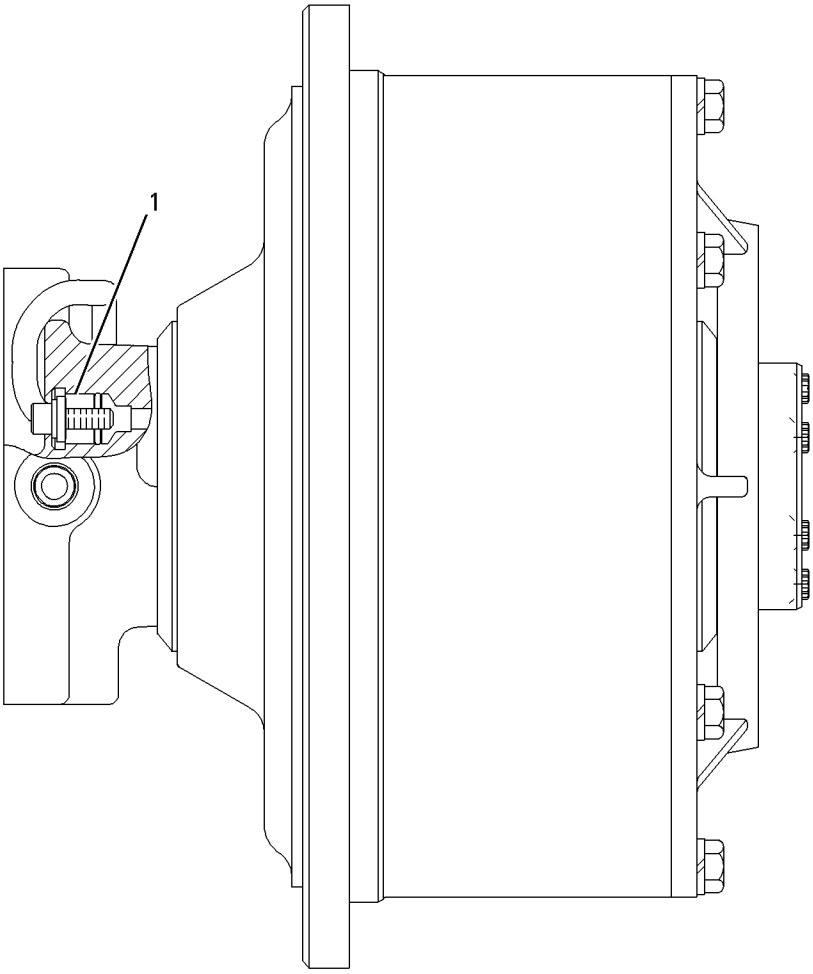

GRAPHIC #1 g00712261

BASIC ENGINE

185-5746 DRIVE GP-FAN

S/N: 3KR1-UP
PART OF 187-4012 DRIVE GP-FAN
FIELD INSTALLATION

SMCS-1357, 1358, 1359, 1390 **i01262356**

NOTE	PART NUMBER	QTY	PART NAME 1 2 3 4 5 6 (PRODUCT LEVEL)	SEE PAGE
	164-5025	1	ADAPTER	
	5P-4625	1	BOLT (5/8-11 THD)	
	8T-8917	6	BOLT (1/2-13X1.25IN)	
	164-5028	1	BRACKET AS	
	1S-9209	1	SHAFT-TIGHTENER	
	4N-0955	1	DOWEL	
	6I-0975	1	SHAFT	
	6Y-7651	2	CONE-ROLLER BEARING	
	6Y-7652	2	CUP-ROLLER BEARING	
	3B-8485	1	FITTING-HYDRAULIC (1/8-27 NPTF)(45 DEGREE)	
	180-9639	1	HUB	
	2S-3230	1	LUBRICANT-BEARING	
	5M-8009	1	PIN-SPRING	
	6I-1684	1	PLATE	
	8C-5222	1	SEAL-LIP	
	5F-3999	1	SEAL-O-RING (123.42MM ID)	
	6I-0976	1	SLEEVE	
	6I-0977	1	SPACER	

<END>

BASIC ENGINE

187-4012 DRIVE GP-FAN

S/N: 3KR1-UP

FIELD INSTALLATION

SMCS-1357, 1358, 1359, 1390 **i01400375**

NOTE	PART NUMBER	QTY	PART NAME 1 2 3 4 5 6 (PRODUCT LEVEL)	SEE PAGE
Y	**185-5746**	1	DRIVE GP-FAN	73
	7X-0328	2	BOLT (1/2-13X3.50 IN)	
	8T-8919	6	BOLT (1/2-13X1.75 IN)	
	153-3699	1	BRACKET AS	
	5K-3772	1	HOSE AS	
	102-8802	1	KIT-RECEPTACLE (2 PIN)	
			(INCLUDES RECEPTACLE AS & WEDGE)	
	102-8803	1	KIT-RECEPTACLE (3 PIN)	
			(INCLUDES RECEPTACLE AS & WEDGE)	
	6V-8188	2	NUT (1/2-13 THD)	
	9S-4185	1	PLUG-O-RING	
	9S-4190	1	PLUG-O-RING	
	8T-8737	6	PLUG-SEAL (3.07MM ID)	
	180-3921	1	PULLEY-CRANKSHAFT	
	6V-4589	1	SEAL-O-RING (19.18MM ID)	
	8L-2786	1	SEAL-O-RING (16.36MM ID)	
	9X-6772	4	STRAP-CABLE	
	118-6330	2	STUD	
	180-4526	1	V-BELT SET (INCLUDES 4 BELTS)	
	8T-4223	2	WASHER-HARD (13.5X25.5X3MM THK)	

Y-SEPARATE ILLUSTRATION

<END>

BASIC ENGINE

192-6156 DRIVE GP-FAN

S/N: 3KR1-UP

BELT

PART OF 203-7802 FAN AR, 180-6632 SUPPRESSION AR-SOUND AN ATTACHMENT

SMCS-1357, 1358, 1359, 1390 **i01505255**

NOTE	REF NO	GRAPHIC REF	PART NUMBER	QTY	PART NAME 1 2 3 4 5 6 (PRODUCT LEVEL)	SEE PAGE
	1	1	**123-5889**	1	V-BELT SET (INCLUDES 4 BELTS)	
	2	1	**150-1960**	1	PULLEY	
	3	1	**192-6148**	1	BRACKET AS	
		1	**1S-9209**	1	SHAFT-TIGHTENER	
		1	**4N-0955**	1	DOWEL	
	4	1	**118-6330**	2	STUD	
Y	5	1	**183-5116**	1	DRIVE GP-FAN	72
	6	1	**5M-1932**	4	STUD-TAPERLOCK (1/2X13X2.2 IN OAL)	
	7	1	**6V-8188**	6	NUT (1/2-13 THD)	
	8	1	**7X-0328**	2	BOLT (1/2-13X3.50 IN)	
	9	1	**8T-4223**	4	WASHER-HARD (13.5X25.5X3MM THK)	
	10	1	**9B-7237**	6	BOLT (3/8-16X1.25 IN)	

Y-SEPARATE ILLUSTRATION

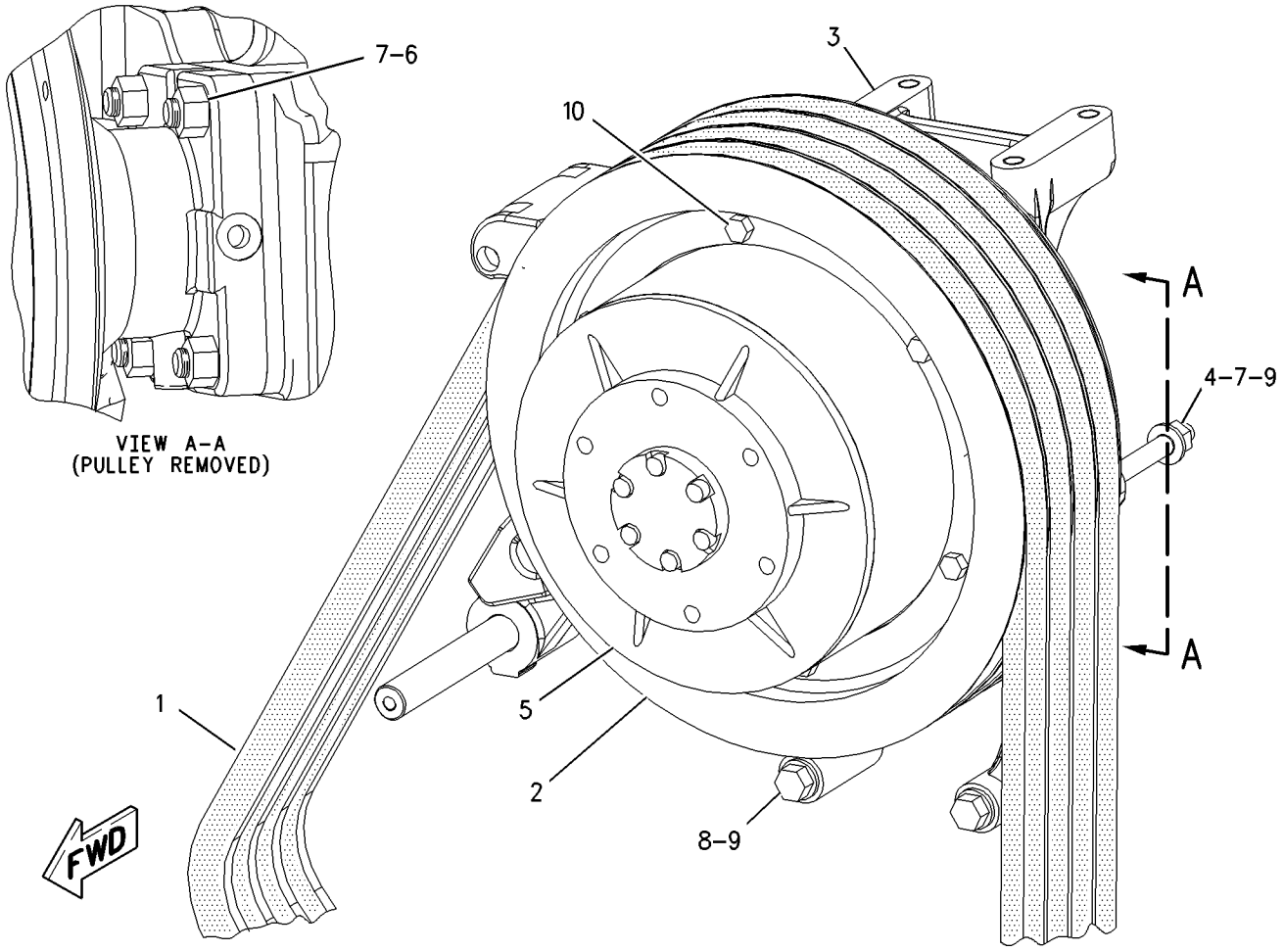

GRAPHIC #1 g00782223

BASIC ENGINE

201-0358 DRIVE GP-FAN

S/N: 3KR1-UP
ARTIC
PART OF 133-6442 COLD WEATHER AR
AN ATTACHMENT

SMCS-1357, 1358, 1359, 1390 **i01480758**

NOTE	REF NO	GRAPHIC REF	PART NUMBER	QTY	PART NAME 1 2 3 4 5 6 (PRODUCT LEVEL)	SEE PAGE
	1	1	**3B-8485**	1	FITTING-GREASE	
	2	1	**5K-3772**	1	HOSE AS	
	3	1	**5M-8009**	1	PIN-SPRING	
	4	1	**5P-4625**	1	BOLT (5/8-11 THD)	
	5	1	**6I-0976**	1	SLEEVE	
	6	1	**6I-0977**	1	SPACER	
	7	1	**6I-1684**	1	PLATE	
	8	1	**6Y-7651**	2	CONE-ROLLER BEARING	
	9	1	**6Y-7652**	2	CUP-ROLLER BEARING	
	10	1	**150-1960**	1	PULLEY	
	11	1	**153-3699**	1	BRACKET AS	
	12	1	**164-5025**	1	ADAPTER	
	13	1	**180-4526**	1	V-BELT SET (INCLUDES 4 BELTS)	
	14	1	**180-9639**	1	HUB	
	15	1	**191-8242**	1	BRACKET AS	
		1	**1S-9209**	1	SHAFT-TIGHTENER	
		1	**4N-0955**	1	DOWEL	
		1	**6I-0975**	1	SHAFT	
	16	1	**118-6330**	2	STUD	
	17	1	**5F-3999**	1	SEAL-O-RING	
	18	1	**6V-8188**	2	NUT (1/2-13 THD)	
	19	1	**7X-0328**	2	BOLT (1/2-13X3.50 IN)	
	20	1	**8C-5222**	1	SEAL-LIP	
	21	1	**8T-4223**	4	WASHER-HARD (13.5X25.5X3MM THK)	
	22	1	**8T-4896**	4	WASHER-HARD (10.2X18.5X2.5MM THK)	
	23	1	**8T-8917**	6	BOLT (1/2-13X1.25 IN)	
	24	1	**9B-7237**	10	BOLT (3/8-16X1.25 IN)	

201-0358 **DRIVE GP-FAN** *(contd.)* **i01480758**

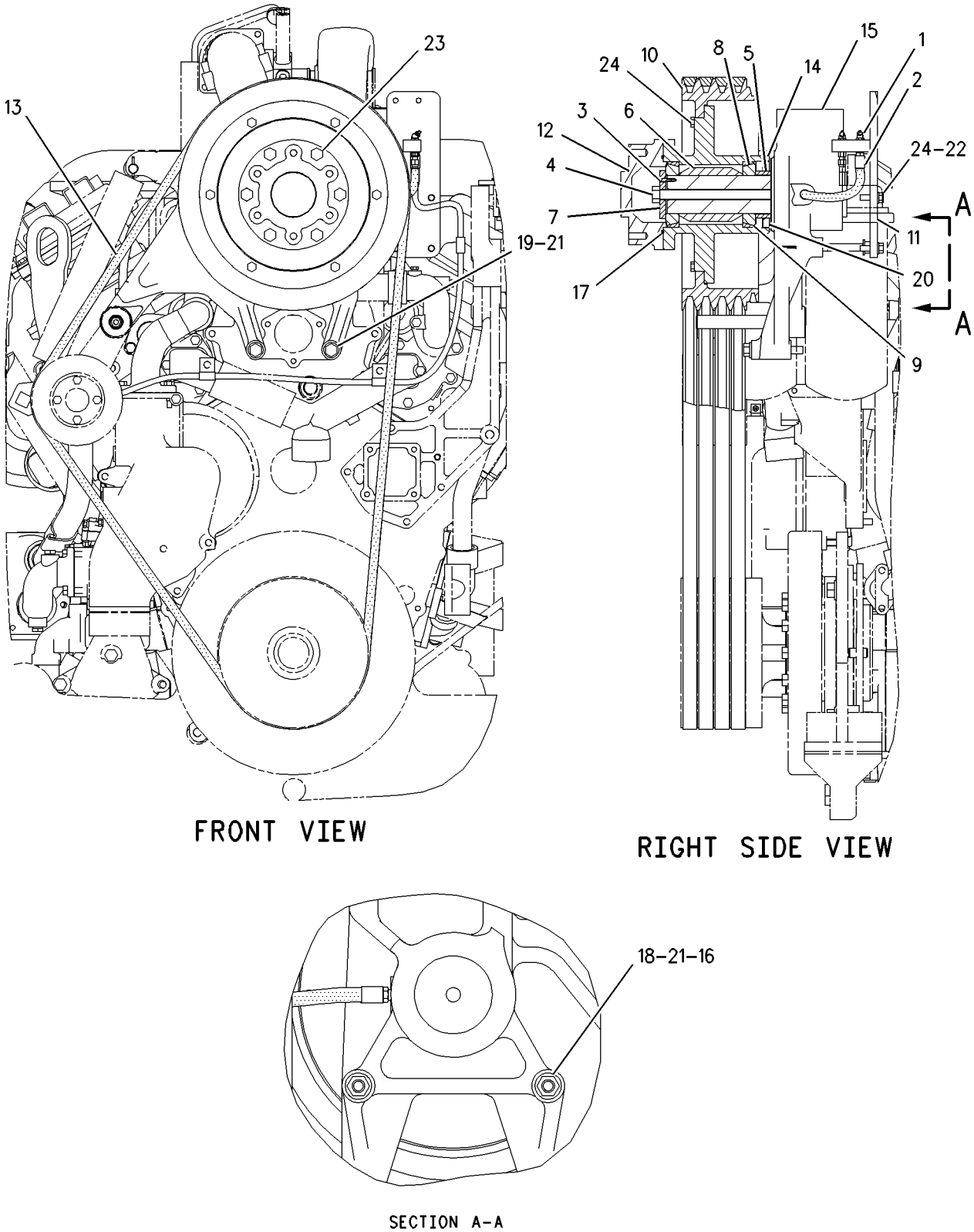

GRAPHIC #1 g00806857

BASIC ENGINE

6N-1350 FLYWHEEL GP

S/N: 80M1-UP
PART OF 115-7641, 135-7810, 155-0058 ENGINE AR
ALSO AN ATTACHMENT

SMCS-1156, 1158 **i01739882**

NOTE	REF NO	GRAPHIC REF	PART NUMBER	QTY	PART NAME 1 2 3 4 5 6 (PRODUCT LEVEL)	SEE PAGE
	1	1	**5L-2683**	12	BOLT (5/8-18X5.23 IN)	
		1	**4D-3704**	12	WASHER-HARD (17X30X5MM THK)	
	2	1	**7N-6391**	1	FLYWHEEL AS	
	3	1	**4N-2514**	1	GEAR (113 TEETH)	

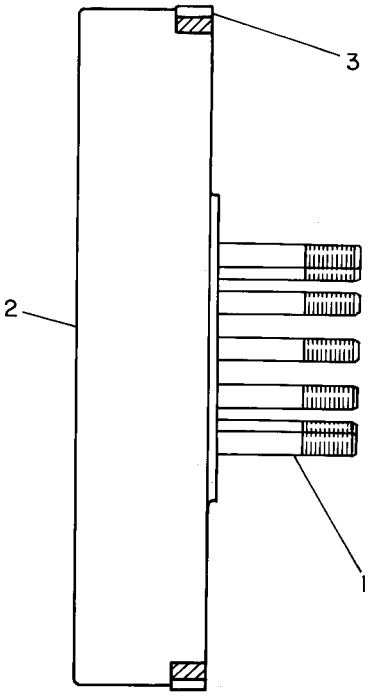

GRAPHIC #1 g00140847

MEMORANDA

BASIC ENGINE

127-3516 GEAR GP-FRONT—TIMING

S/N: 80M1-UP

PART OF 115-7641, 135-7810, 155-0058 ENGINE AR

ALSO AN ATTACHMENT

SMCS-1206 **i01437709**

NOTE	REF NO	GRAPHIC REF	PART NUMBER	QTY	PART NAME 1 2 3 4 5 6 (PRODUCT LEVEL)	SEE PAGE
	1	1	**2B-2695**	4	BOLT (5/16-18X0.875 IN)	
	2	1	**112-9217**	1	PLATE-THRUST	
	3	1	**2W-4087**	1	GEAR AS-IDLER (35 TEETH)	
		1	**6N-0977**	1	BEARING-SLEEVE	
	4	1	**2W-3875**	1	GEAR-OIL PUMP DRIVE (56 TEETH)	
	5	1	**1P-7346**	1	WASHER-HARD (10.2X35X6MM THK)	
	6	1	**0S-1571**	1	BOLT (3/8-16X1.75 IN)	
	7	1	**124-7609**	1	GEAR-PUMP IDLER (86 TEETH)	
	8	1	**7S-5005**	2	DOWEL	
	9	1	**6N-1025**	1	SHAFT-PUMP IDLER	
		1	**4H-1641**	1	PIN-SPRING	
	10	1	**3B-1915**	2	BOLT (3/8-16X1.37 IN)	
	11	1	**6N-1027**	1	PLATE-THRUST	
	12	1	**0T-0573**	1	BOLT (3/8-16X2.75 IN)	
	13	1	**151-2946**	1	GEAR AS-IDLER (99 & 43 TEETH)	
		1	**1B-8705**	1	KEY-WOODRUFF	
		1	**131-7123**	1	BEARING-SLEEVE	
	14	1	**117-9712**	1	SHAFT-DRIVE IDLER	
	15	1	**3G-2292**	5	BOLT-LOCKING (3/8-16X22.22MM)	
	16	1	**7N-2443**	1	WASHER-THRUST (2.51X2.89X0.188IN THK)	
	17	1	**5M-2894**	3	WASHER-HARD (10.2X18.5X2.5MM THK)	
	18	1	**101-6713**	1	PLATE-RETAINING	
	19	1	**5P-5855**	4	BOLT-12 POINT HEAD (1/2-13X1.75 IN)	

127-3516 **GEAR GP-FRONT** *(contd.)* **i01437709**

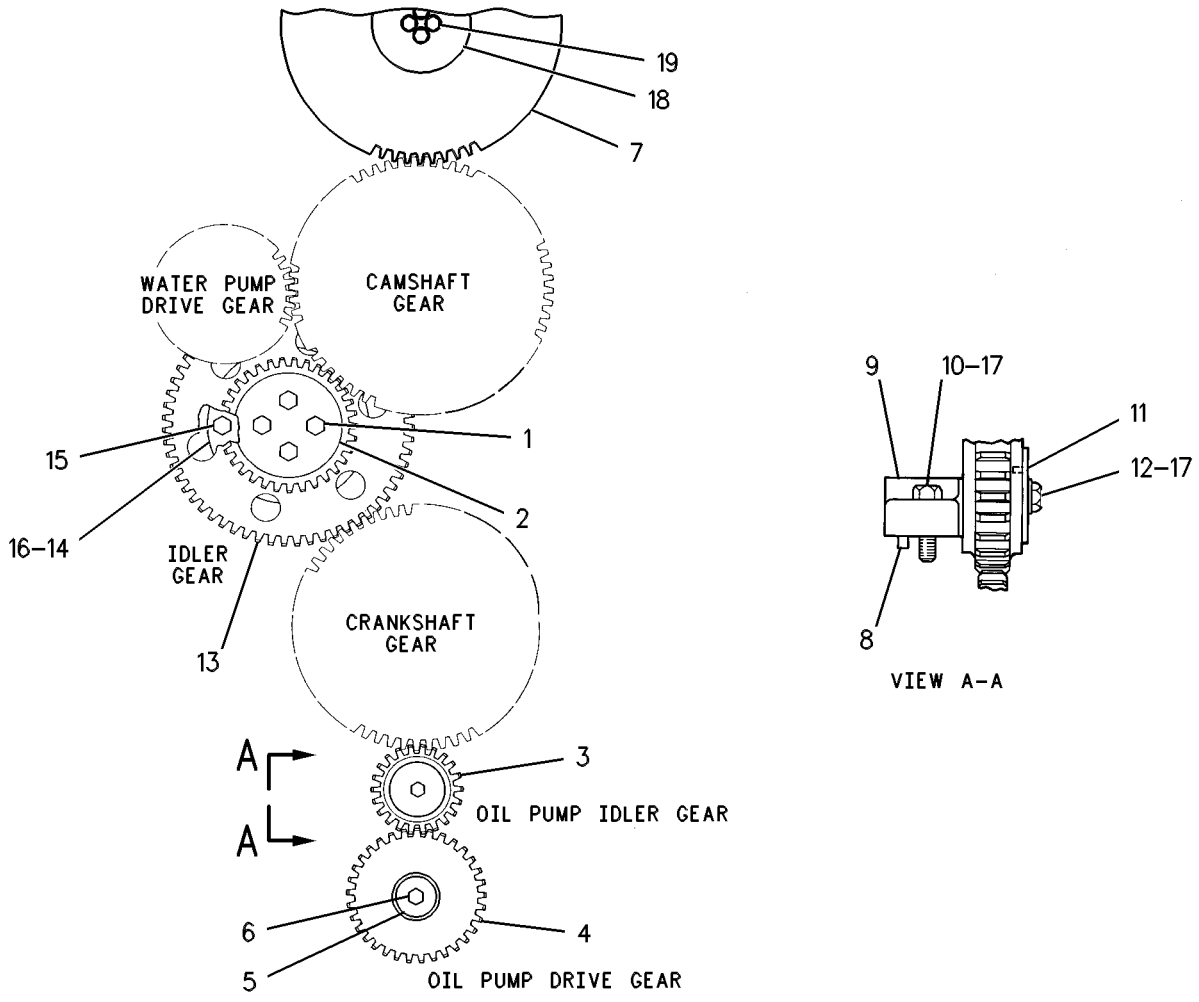

GRAPHIC #1 g00088490

BASIC ENGINE

8N-0614 GEAR GP-REAR

S/N: 80M1-UP
PART OF 115-7641, 135-7810, 155-0058 ENGINE AR
ALSO AN ATTACHMENT

SMCS-1204 **i01739990**

NOTE	REF NO	GRAPHIC REF	PART NUMBER	QTY	PART NAME 1 2 3 4 5 6 (PRODUCT LEVEL)	SEE PAGE
	1	1	**6V-4589**	1	SEAL-O-RING	
	2	1	**030-8194**	1	CONNECTOR-FLARED	
	3	1	**8N-7806**	1	HOSE AS	
	4	1	**032-1267**	1	CONNECTOR-FLARED	
	5	1	**1A-2029**	12	BOLT (3/8-16X1.125 IN)	
	6	1	**9Y-9929**	2	ADAPTER AS	
					(EACH INCLUDES)	
		1	**1T-0550**	2	PIN-SPRING	
		1	**8N-0634**	1	ADAPTER-HYDRAULIC PUMP	
	7	1	**5P-8247**	4	WASHER-HARD (17X32X3.5MM THK)	
	8	1	**9S-8752**	2	NUT-FULL (3/8-16 THD)	
	9	1	**5M-2894**	2	WASHER-HARD (10.2X18.5X2.5MM THK)	
	10	1	**8N-0605**	1	COVER-FLYWHEEL HOUSING	
	11	1	**0S-1595**	2	BOLT (1/2-13X1.25 IN)	
		1	**5P-8245**	2	WASHER-HARD (13.5X25.5X3MM THK)	
	12	1	**9X-7371**	1	SEAL-O-RING	
	13	1	**2W-7615**	2	GEAR-IDLER (64 TEETH)	
	14	1	**2W-7614**	1	GEAR-CRANKSHAFT (64 TEETH)	
	15	1	**4N-0684**	1	DOWEL	
	16	1	**4N-1235**	2	SHAFT-IDLER GEAR	
	17	2	**5P-8429**	2	SEAL-O-RING	
	18	2	**1A-2029**	8	BOLT (3/8-16X1.125 IN)	
		2	**5M-2894**	8	WASHER-HARD (10.2X18.5X2.5MM THK)	
	19	2	**4N-1232**	2	WASHER-RETAINING	
	20	2	**5P-1370**	2	BEARING AS-ROLLER	
	21	2	**4N-7183**	2	RING-RETAINING	
	22	2	**1T-0720**	12	BOLT-12 POINT HEAD (3/8-16X1.25 IN)	
	23	2	**2W-7610**	2	GEAR (64 TEETH)	
C	24	2	**6V-7423**	2	BEARING AS-ROLLER	
	25	2	**6V-3319**	1	SEAL-O-RING	
	26	2	**1D-4566**	8	BOLT (1/2-13X3.5 IN)	
	27	2	**5K-9065**	2	RING-RETAINING	
	28	2	**4N-0848**	1	SLEEVE-WEAR	

C-CHANGE FROM PREVIOUS TYPE

8N-0614 **GEAR GP-REAR** *(contd.)* **i01739990**

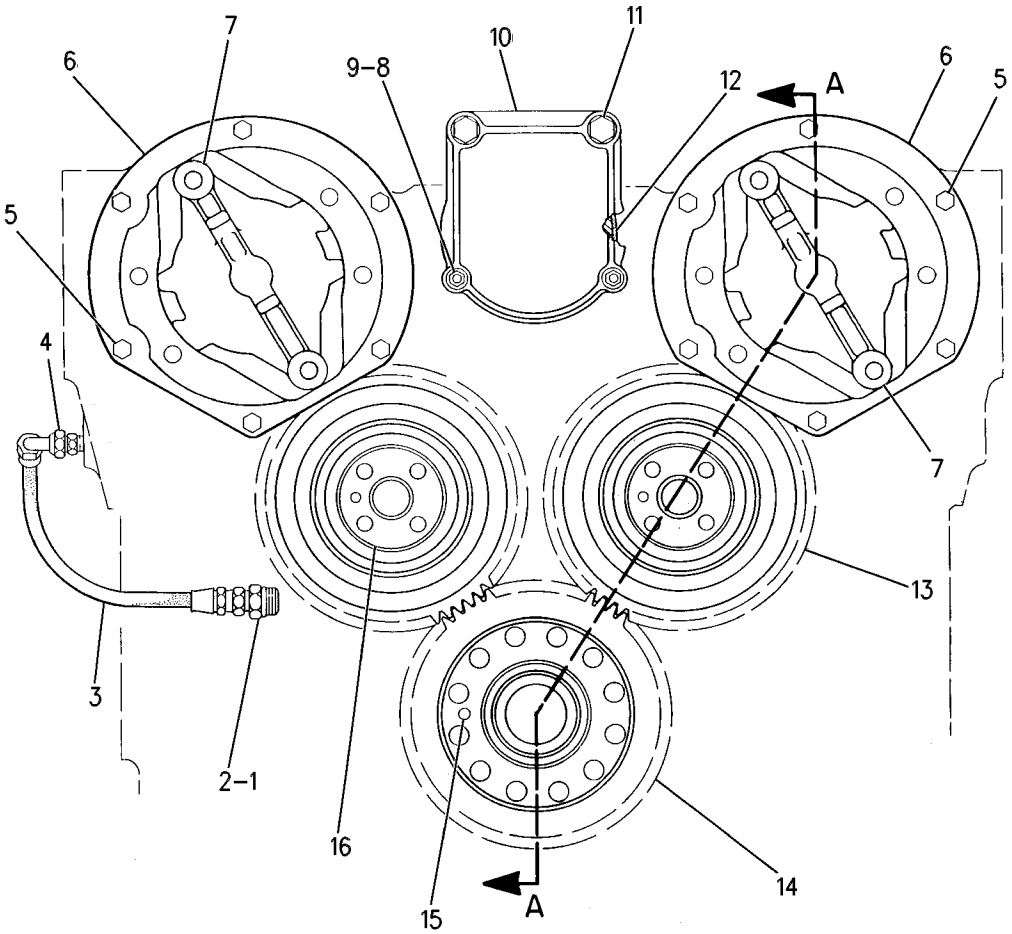

GRAPHIC #1 g00362748

8N-0614 **GEAR GP-REAR** *(contd.)* **i01739990**

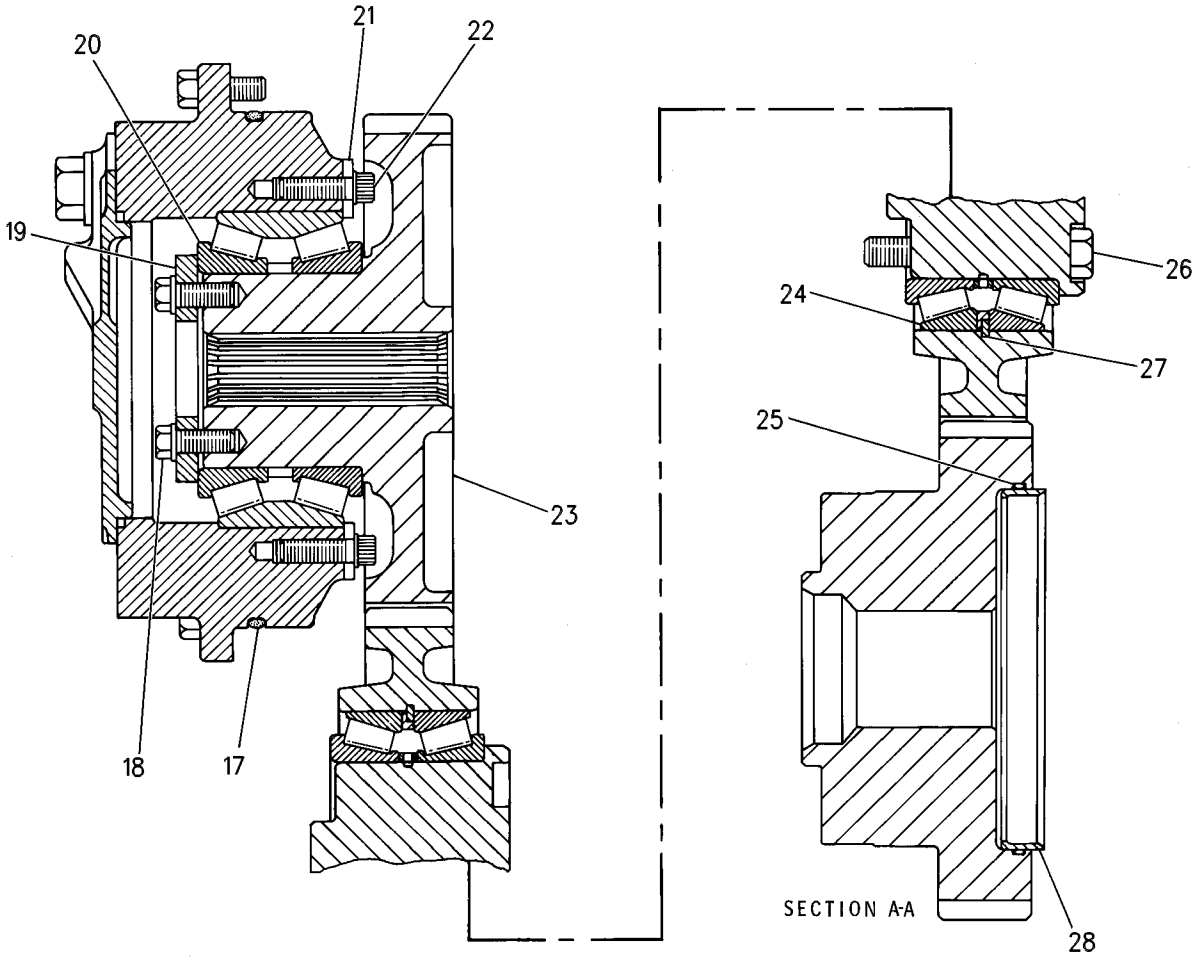

GRAPHIC #2 g00362749

MEMORANDA

BASIC ENGINE

138-4123 GEAR GP-REAR

S/N: 80M674-UP
PART OF 135-7810 ENGINE AR
AN ATTACHMENT

SMCS-1204 **i01739997**

NOTE	REF NO	GRAPHIC REF	PART NUMBER	QTY	PART NAME 1 2 3 4 5 6 (PRODUCT LEVEL)	SEE PAGE
	1	2	**8N-0605**	1	COVER-FLYWHEEL HOUSING	
	2	2	**9X-7371**	1	SEAL-O-RING	
	3	1,2	**5M-2894**	10	WASHER-HARD (10.2X18.5X2.5MM THK)	
	4	2	**0S-1595**	2	BOLT (1/2-13X1.25 IN)	
	5	2	**5P-8245**	2	WASHER-HARD (13.5X25.5X3MM THK)	
	6	1	**9Y-9929**	1	ADAPTER AS	
		1	**1T-0550**	1	PIN-SPRING	
	7	2	**2W-7615**	2	GEAR-IDLER (64 TEETH)	
	8	2	**2W-7614**	1	GEAR-CRANKSHAFT (64 TEETH)	
	9	1	**030-8194**	1	CONNECTOR-FLARED	
	10	1	**6V-4589**	1	SEAL-O-RING	
	11	1	**8N-7806**	1	HOSE AS	
	12	1	**032-1267**	1	CONNECTOR-FLARED	
	13	2	**4N-0684**	1	DOWEL	
	14	1,2	**2W-7610**	2	GEAR (64 TEETH)	
	15	1,2	**5P-8429**	2	SEAL-O-RING	
	16	1,2	**4N-7183**	2	RING-RETAINING	
	17	1,2	**1T-0720**	12	BOLT-12 POINT HEAD (3/8-16X1.25 IN)	
	18	1,2	**5P-1370**	2	BEARING AS-ROLLER	
	19	2	**6V-7423**	2	BEARING AS-ROLLER	
	20	2	**1D-4566**	8	BOLT (1/2-13X3.5 IN)	
	21	2	**4N-1235**	2	SHAFT-IDLER GEAR	
	22	2	**5K-9065**	2	RING-RETAINING	
	23	2	**4N-0848**	1	SLEEVE-WEAR	
	24	2	**6V-3319**	1	SEAL-O-RING	
	25	1,2	**1A-2029**	20	BOLT (3/8-16X1.125 IN)	
	26	1	**4N-1232**	2	WASHER-RETAINING	
	27	2	**9S-8752**	2	NUT-FULL (3/8-16 THD)	
	28	1,2	**5P-8247**	2	WASHER-HARD (17X32X3.5MM THK)	
	29	2	**7E-2721**	1	ADAPTER AS	
	30	2	**1T-0550**	1	PIN-SPRING	

138-4123 **GEAR GP-REAR** *(contd.)* **i01739997**

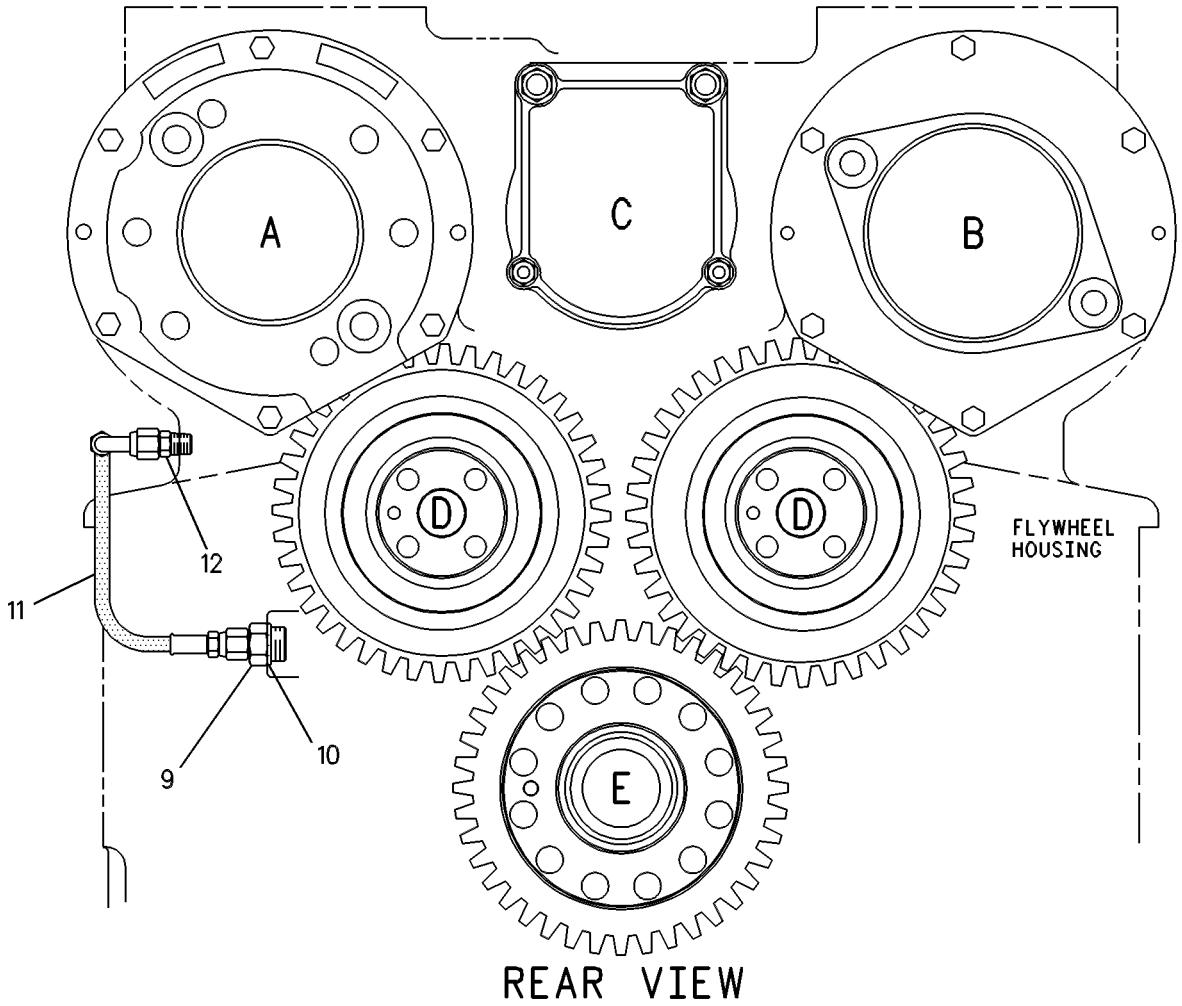

REAR VIEW

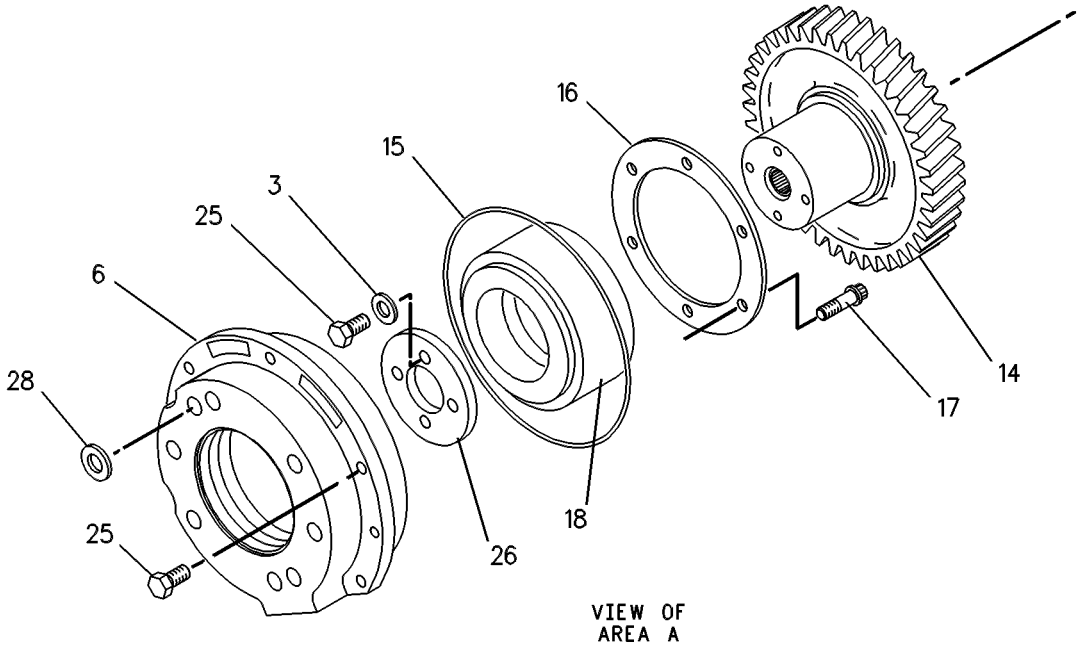

GRAPHIC #1 g00279285

138-4123 **GEAR GP-REAR** *(contd.)* **i01739997**

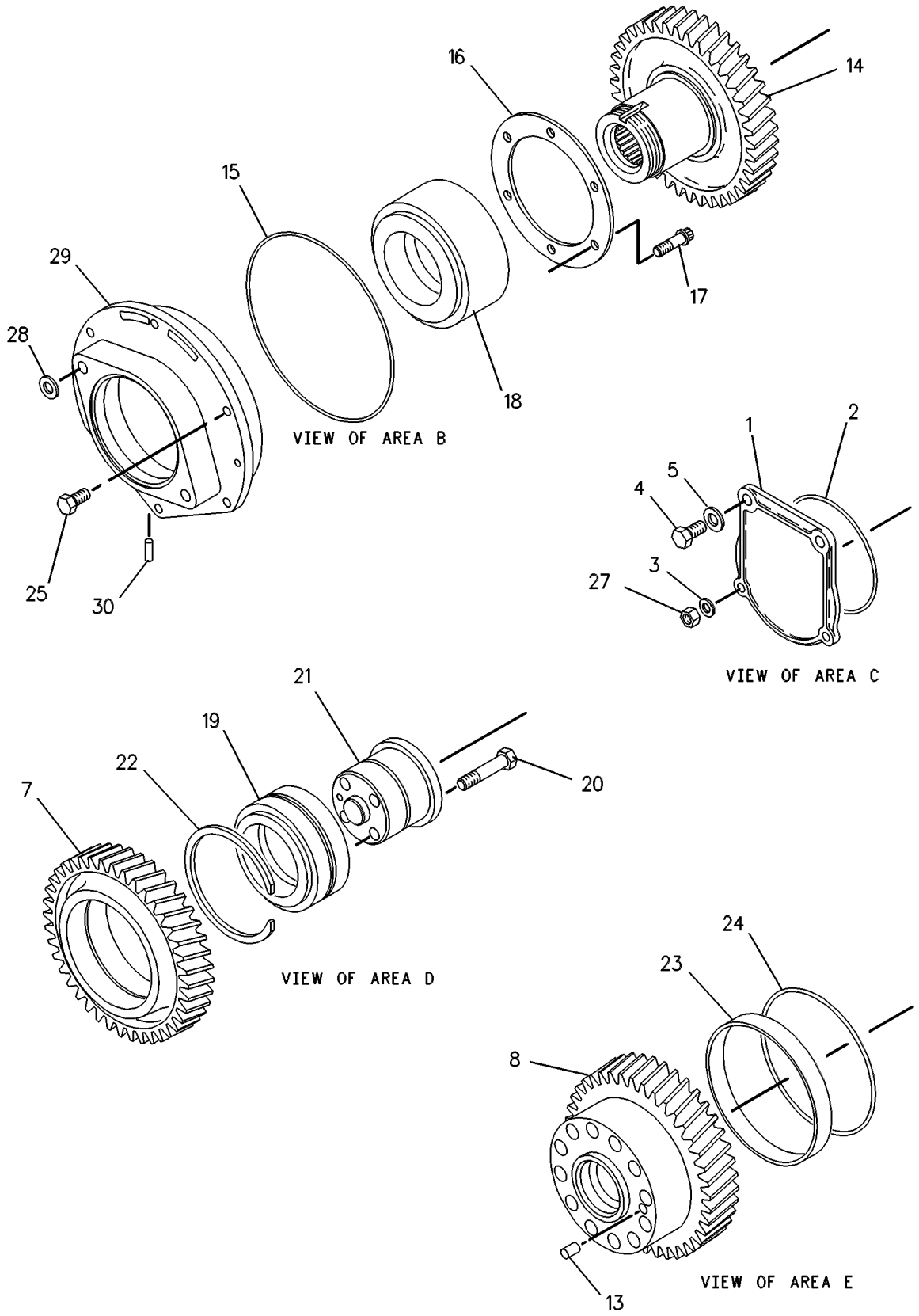

GRAPHIC #2 g00279286

MEMORANDA

BASIC ENGINE

128-2982 HOUSING GP-FLYWHEEL

S/N: 80M1-UP

PART OF 115-7641, 135-7810, 155-0058 ENGINE AR

ALSO AN ATTACHMENT

SMCS-1157 **i01446347**

NOTE	REF NO	GRAPHIC REF	PART NUMBER	QTY	PART NAME 1 2 3 4 5 6 (PRODUCT LEVEL)	SEE PAGE
	1	1	**127-3605**	1	HOUSING AS	
		1	**1W-3136**	1	BAFFLE	
	2	1	**0S-1619**	4	BOLT (3/8-16X3 IN)	
	3	1	**8T-6764**	1	PLUG-PIPE	
	4	1	**161-7293**	1	GASKET-CYLINDER	
	5	1	**9M-4225**	2	BOLT (3/8 NC X 4 3/8)	
	6	1	**1A-5964**	2	BOLT (3/8-16X4.5 IN)	
	7	1	**2P-2772**	2	COVER	
	8	1	**4N-0933**	2	GASKET	
	9	1	**1A-2029**	2	BOLT (3/8-16X1.125 IN)	
	10	1	**5M-2894**	10	WASHER-HARD (10.2X18.5X2.5MM THK)	
	11	1	**8T-6765**	4	PLUG-PIPE	
	12	1	**5P-8245**	8	WASHER-HARD (13.5X25.5X3MM THK)	
	13	1	**0S-1590**	6	BOLT (3/8-16X2 IN) (MARKED Y)	
	14	1	**3S-0036**	2	PLUG-CORE	
	15	1	**3D-2871**	2	STUD	
	16	1	**8T-6761**	1	PLUG-PIPE	
	17	1	**0L-1352**	1	BOLT (3/8-16X3.25 IN)	
	18	1	**8M-9124**	1	WASHER (10X22.5X8MM THK)	
	19	1	**2H-6488**	8	BOLT (1/2-13X5IN) (MARKED X)	
	20	1	**5F-0304**	1	PLUG-DRAIN	
	21	1	**2A-1162**	1	GASKET	
	22	1	**1W-3189**	6	SPACER	

128-2982 **HOUSING GP-FLYWHEEL** *(contd.)* **i01446347**

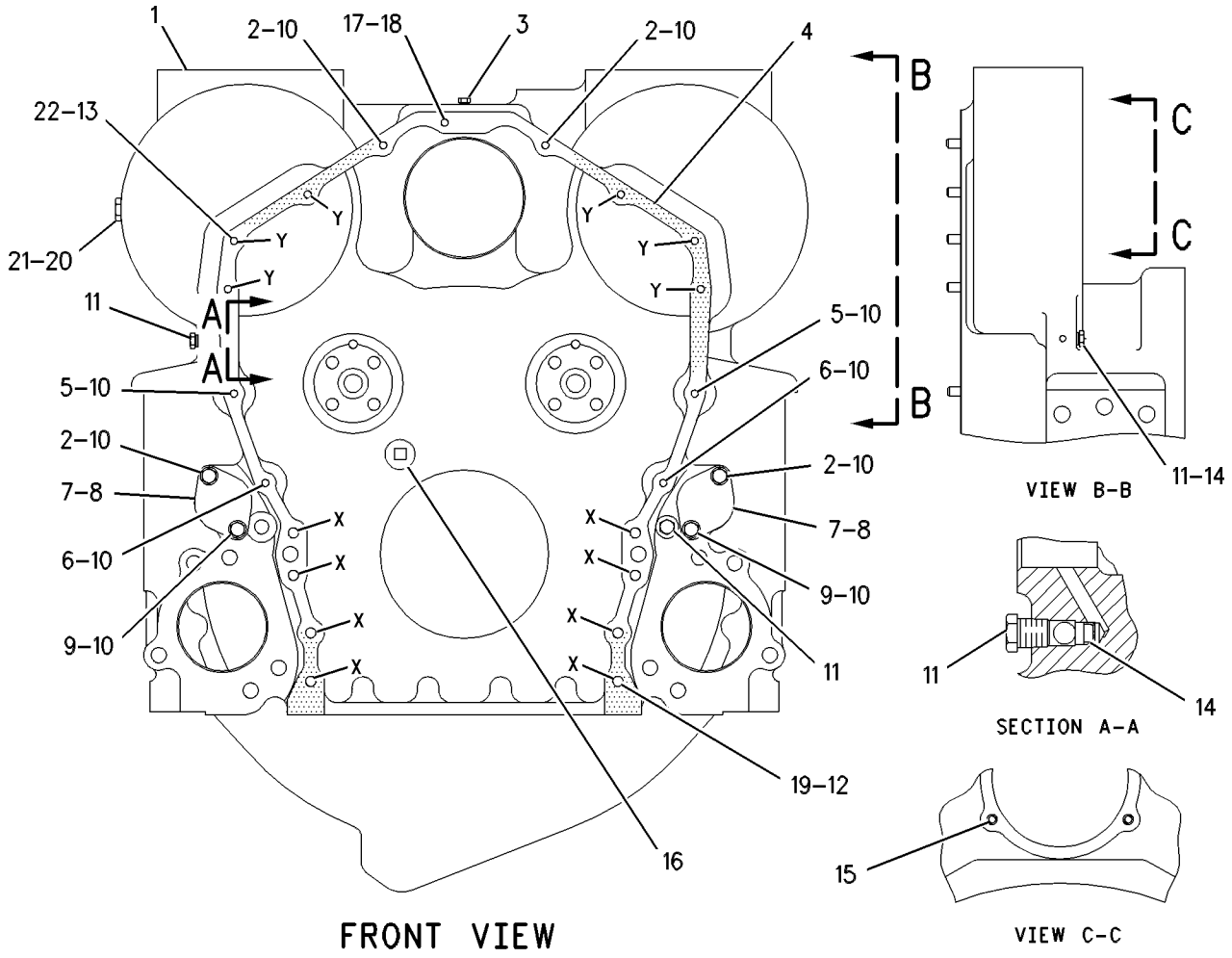

GRAPHIC #1 g00278418

BASIC ENGINE

127-3514 HOUSING GP-FRONT

S/N: 80M1-674
PART OF 115-7641, 135-7810 ENGINE AR
ALSO AN ATTACHMENT

SMCS-1151, 1162, 1166 **i01390284**

NOTE	REF NO	GRAPHIC REF	PART NUMBER	QTY	PART NAME 1 2 3 4 5 6 (PRODUCT LEVEL)	SEE PAGE
	1	1	**123-4207**	1	GASKET-CYLINDER BLOCK	
	2	1	**124-4347**	1	HOUSING-TIMING GEAR	
	3	1	**3K-3256**	1	STUD	
	4	1	**9S-8752**	1	NUT-FULL (3/8-16 THD)	
	5	1	**0L-1352**	2	BOLT (3/8-16X3.25 IN)	
	6	1	**5M-2894**	6	WASHER-HARD (10.2X18.5X2.5MM THK)	
	7	1	**0T-0573**	3	BOLT (3/8-16X2.75 IN)	
	8	1	**4B-8641**	1	STUD	
Y	9	1	*127-1008*	2	SENSOR GP-SPEED	464

Y-SEPARATE ILLUSTRATION

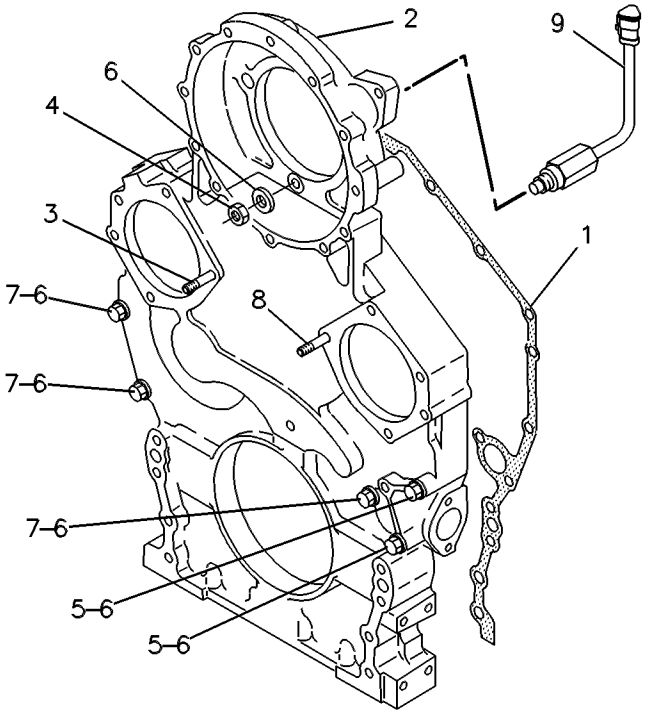

GRAPHIC #1 g00253089

BASIC ENGINE

127-3514 HOUSING GP-FRONT

S/N: 80M675-UP
PART OF 115-7641, 135-7810, 155-0058 ENGINE AR
ALSO AN ATTACHMENT

SMCS-1151, 1162, 1166 **i01390290**

NOTE	REF NO	GRAPHIC REF	PART NUMBER	QTY	PART NAME 1 2 3 4 5 6 (PRODUCT LEVEL)	SEE PAGE
	1	1	**166-9145**	1	GASKET-CYLINDER BLOCK	
	2	1	**172-9313**	1	HOUSING-TIMING GEAR	
	3	1	**3K-3256**	1	STUD	
	4	1	**2K-4973**	1	LOCKNUT (3/8-16 THD)	
	5	1	**0L-1352**	2	BOLT (3/8-16X3.25 IN)	
	6	1	**5M-2894**	6	WASHER-HARD (10.2X18.5X2.5MM THK)	
	7	1	**0T-0573**	3	BOLT (3/8-16X2.75 IN)	
	8	1	**4B-8641**	1	STUD	
YC	9	1	**129-6628**	2	SENSOR GP-SPEED	465

C-CHANGE FROM PREVIOUS TYPE
Y-SEPARATE ILLUSTRATION

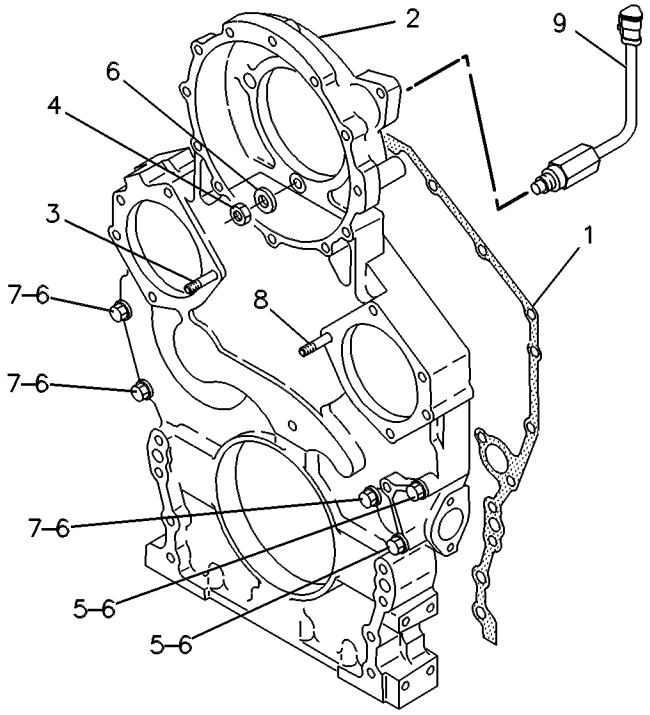

GRAPHIC #1 g00253089

BASIC ENGINE

126-2267 LIFTING GP-ENGINE

S/N: 80M1-UP

PART OF 115-7641, 135-7810, 155-0058 ENGINE AR

ALSO AN ATTACHMENT

SMCS-1122 **i01699965**

NOTE	REF NO	GRAPHIC REF	PART NUMBER	QTY	PART NAME 1 2 3 4 5 6 (PRODUCT LEVEL)	SEE PAGE
	1	1	**5P-8245**	8	WASHER-HARD (13.5X25.5X3MM THK)	
	2	1	**118-8475**	1	BRACKET-LIFTING	
	3	1	**7B-3235**	4	BOLT (1/2-13X1.375 IN)	
	4	1	**118-9115**	1	BRACKET-LIFTING	
	5	1	**0S-1587**	4	BOLT (1/2-13X1.75 IN)	

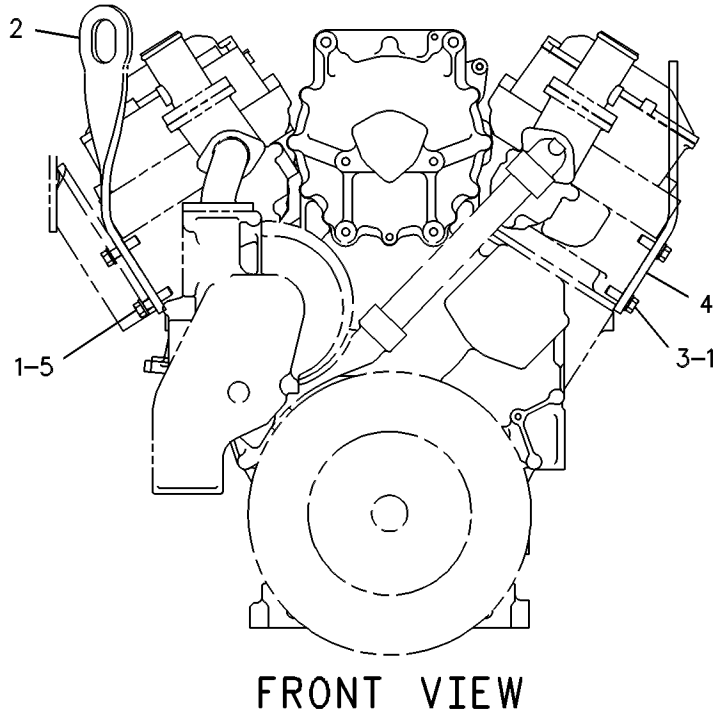

GRAPHIC #1 g00111352

MEMORANDA

BASIC ENGINE

7C-5017 PAN GP-OIL

S/N: 80M1-UP
PART OF 115-7641, 135-7810, 155-0058 ENGINE AR
ALSO AN ATTACHMENT

SMCS-1302 **i01459531**

NOTE	REF NO	GRAPHIC REF	PART NUMBER	QTY	PART NAME 1 2 3 4 5 6 (PRODUCT LEVEL)	SEE PAGE
	1	1	**113-4323**	1	PAN-OIL (REAR)	
	2	1	**4N-1151**	1	GASKET	
	3	1	**6N-2469**	1	GASKET-OIL PAN	
	4	1	**9S-4181**	1	PLUG-STRAIGHT THREAD	
	5	1	**5P-7701**	1	SEAL-O-RING	
	6	1	**5M-2894**	28	WASHER-HARD (10.2X18.5X2.5MM THK)	
	7	1	**2P-3204**	2	BOLT-WASHER HEAD	
	8	1	**6V-3830**	1	SEAL-O-RING	
	9	1	**4P-0519**	1	ADAPTER AS-DRAIN	
	10	1	**4P-0513**	1	PLUG-OIL DRAIN	
	11	1	**0S-1587**	2	BOLT (1/2-13X1.75 IN)	
	12	1	**8T-6761**	1	PLUG-PIPE	
	13	1	**2P-3203**	30	BOLT-WASHER HEAD (3/8-16X1.25 IN)	
	14	1	**7N-9802**	1	PAN-FRONT OIL	
	15	1	**9S-8752**	6	NUT-FULL (3/8-16 THD)	
	16	1	**3B-1915**	6	BOLT (3/8-16X1.37 IN)	
	17	1	**1C-2251**	6	BOLT (3/8-16X1.87 IN)	
	18	1	**8N-0422**	1	GASKET-OIL PAN-REAR	
	19	1	**8N-0423**	1	PAN-OIL	
	20	1	**0T-0055**	4	BOLT (3/8-16X4.25 IN)	
	21	1	**2M-1656**	1	COVER	
	22	1	**2M-5407**	1	GASKET	
	23	1	**0S-1594**	2	BOLT (3/8-16X1 IN)	
	24	1	**9S-4183**	1	PLUG	
	25	1	**106-9586**	1	SEAL-O-RING	
	26	1	**0T-0573**	4	BOLT (3/8-16X2.75 IN)	

7C-5017 **PAN GP-OIL** *(contd.)* **i01459531**

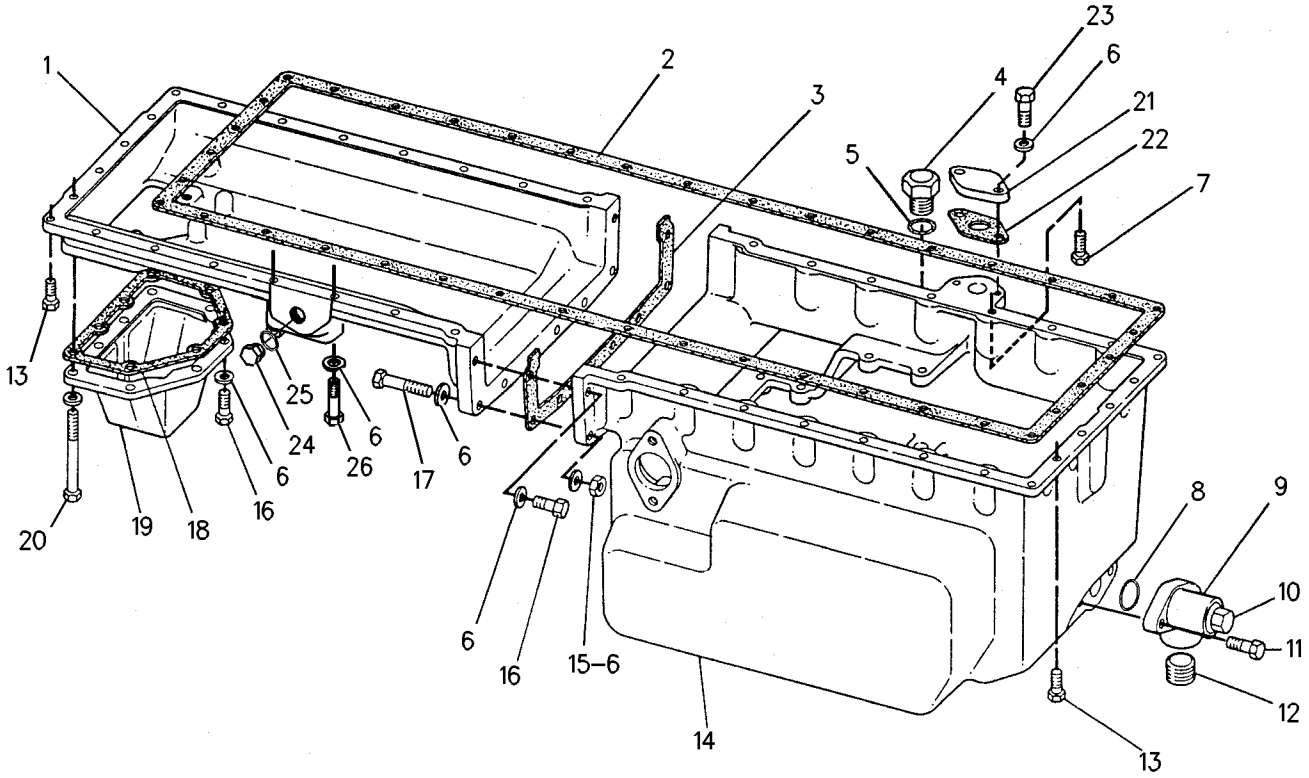

GRAPHIC #1 g00762817

BASIC ENGINE

109-2823 PISTON & ROD GP

S/N: 80M1-3849
15.5:1 RATIO
PART OF 115-7641, 135-7810, 155-0058 ENGINE AR
ALSO AN ATTACHMENT

SMCS-1213, 1214, 1215, 1218, 1219, 1225, 1239 **i01694339**

NOTE	REF NO	GRAPHIC REF	PART NUMBER	QTY	PART NAME 1 2 3 4 5 6 (PRODUCT LEVEL)	SEE PAGE
	1	1	**172-3280**	1	BODY AS-PISTON	
	2	1	**8N-1608**	1	PIN-PISTON	
	3	1	**7E-5665**	2	RETAINER-PIN	
	4	1	**160-8178**	1	ROD AS-CONNECTING	
		1	**4P-8495**	1	BEARING-SLEEVE	
	4A	1	**6N-8942**	2	BOLT-CONNECTING ROD	
	4B	1	**8L-3441**	2	NUT (9/16-18 THD)	
	5	1	**9Y-9497**	1	BEARING-CONNECTING ROD (STANDARD)	
A		1	**4W-5702**	1	BEARING-CONNECTING ROD (.635MM US)	
A		1	**4W-5703**	1	BEARING-CONNECTING ROD (1.27MM US)	
	6	1	**1W-9460**	1	RING-PISTON (TOP)	
	7	1	**2P-2817**	1	RING-PISTON (INTERMEDIATE)	
	8	1	**7N-7078**	1	RING-PISTON (OIL CONTROL)	
	9	1	**150-1156**	1	BOLT-OIL JET	
	10	1	**168-4538**	1	TUBE AS-OIL JET	

A-NOT PART OF THIS GROUP

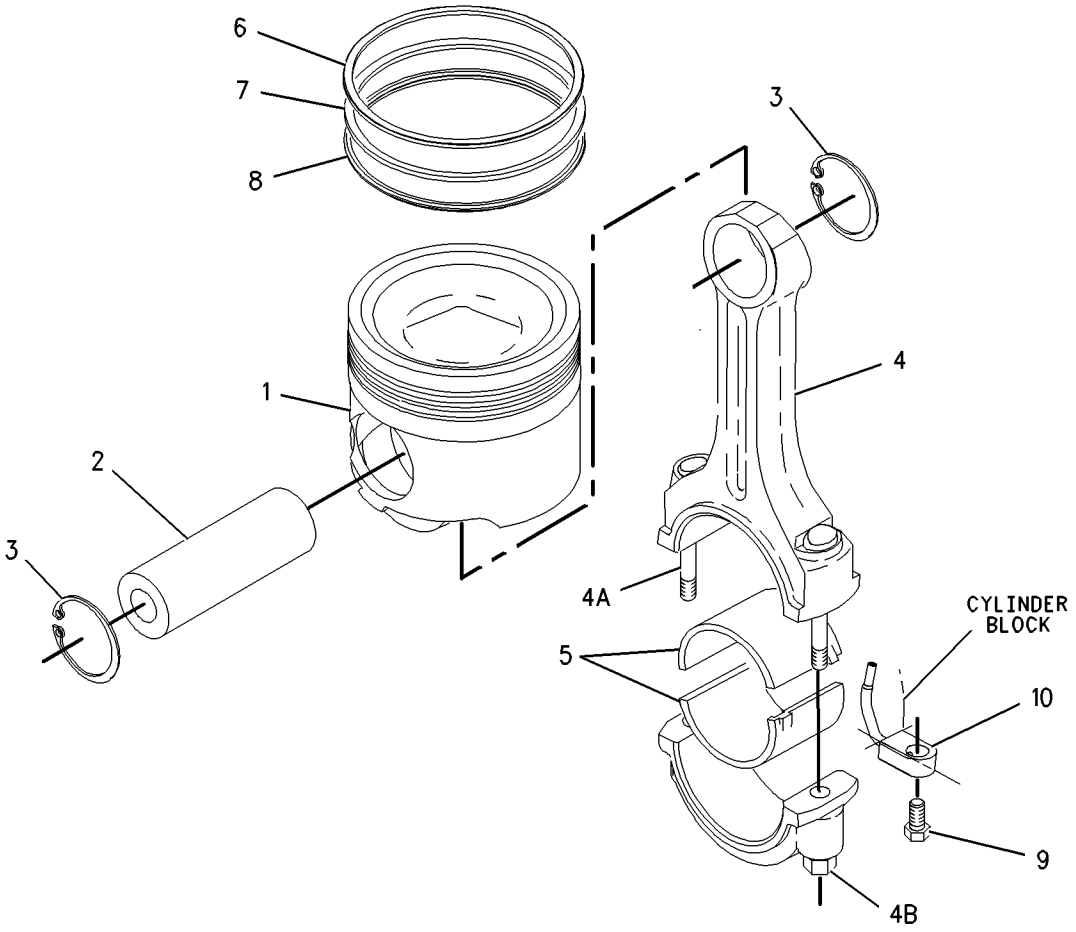

GRAPHIC #1 g00677624

BASIC ENGINE

192-8808 PISTON & ROD GP

S/N: 80M3850-UP
PART OF 115-7641, 135-7810, 155-0058 ENGINE AR
ALSO AN ATTACHMENT

SMCS-1213, 1214, 1215, 1218, 1219, 1225, 1239 **i01404352**

NOTE	REF NO	GRAPHIC REF	PART NUMBER	QTY	PART NAME 1 2 3 4 5 6 (PRODUCT LEVEL)	SEE PAGE
	1	1	**192-2208**	1	BODY AS-PISTON	
	2	1	**173-0148**	1	PIN-PISTON	
	3	1	**7E-5665**	2	RETAINER-PIN	
	4	1	**160-8178**	1	ROD AS-CONNECTING	
	4A	1	**4P-8495**	1	BEARING-SLEEVE	
	4B	1	**8L-3441**	2	NUT (9/16-18 THD)	
	4C	1	**6N-8942**	2	BOLT-CONNECTING ROD	
	5	1	**9Y-9497**	1	BEARING-CONNECTING ROD (STANDARD)	
A		1	**4W-5702**	1	BEARING-CONNECTING ROD (.635MM US)	
A		1	**4W-5703**	1	BEARING-CONNECTING ROD (1.27MM US)	
	6	1	**177-7496**	1	RING-PISTON (TOP)	
	7	1	**192-8807**	1	RING-INTERMEDIATE	
	8	1	**187-1507**	1	RING-PISTON (OIL CONTROL)	
	9	1	**173-0147**	1	TUBE AS-OIL JET	
	10	1	**150-1156**	1	BOLT-OIL JET	

A-NOT PART OF THIS GROUP

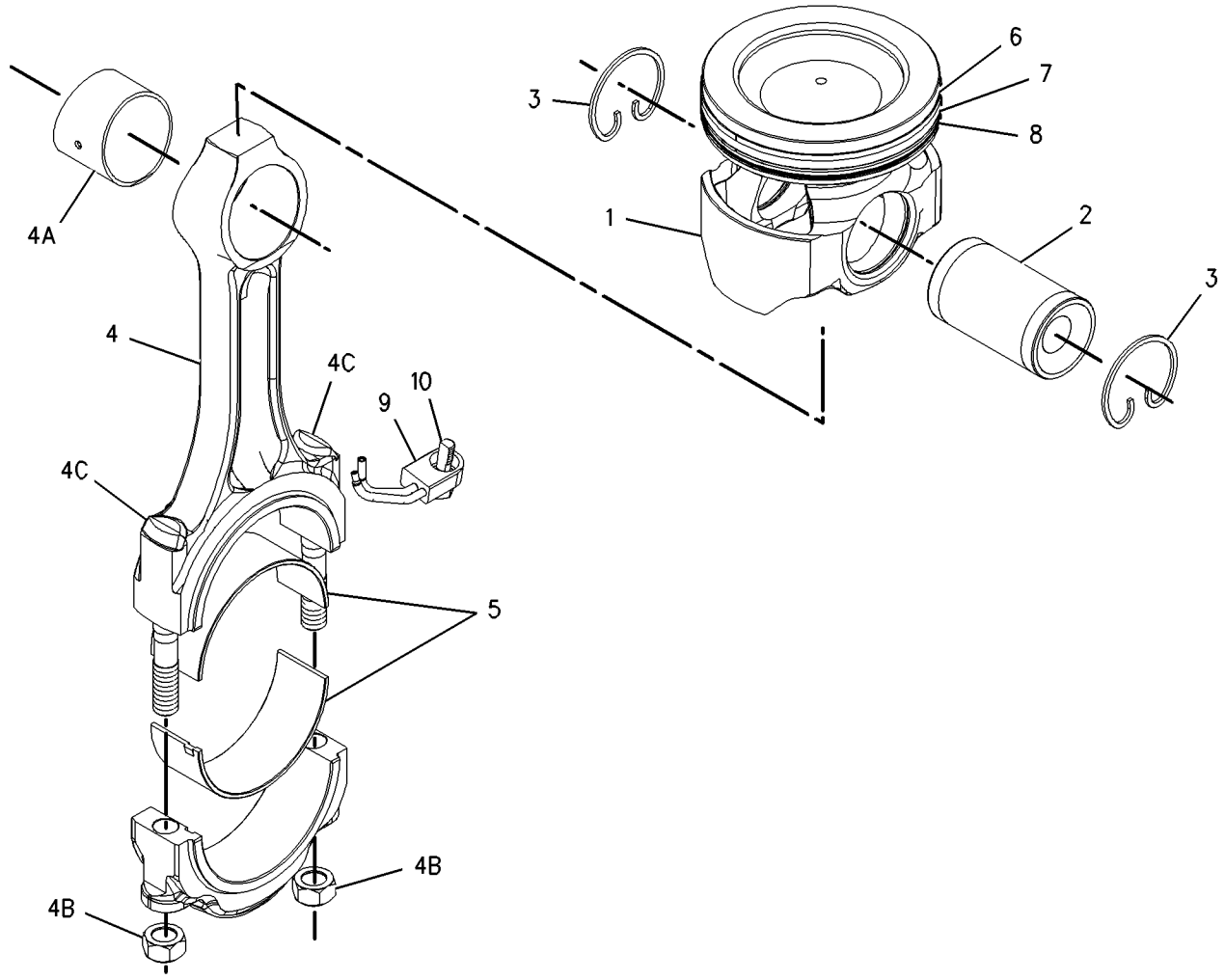

GRAPHIC #1 g00746941

BASIC ENGINE

127-3512 PLUG GP-CYLINDER BLOCK

S/N: 80M1-353

PART OF 115-7641 ENGINE AR

SMCS-1201 **i00117132**

NOTE	REF NO	GRAPHIC REF	PART NUMBER	QTY	PART NAME 1 2 3 4 5 6 (PRODUCT LEVEL)	SEE PAGE
	1	1	**9S-4190**	6	PLUG-O-RING (7/16-20 THD)	
	2	1	**6V-4589**	6	SEAL-O-RING (19.18MM ID)	
	3	1	**7W-6534**	4	PLUG-PIPE (3/8-18 NPTF THD)	
	4	1	**8T-6757**	1	PLUG-PIPE (1/8-27 NPTF THD)	

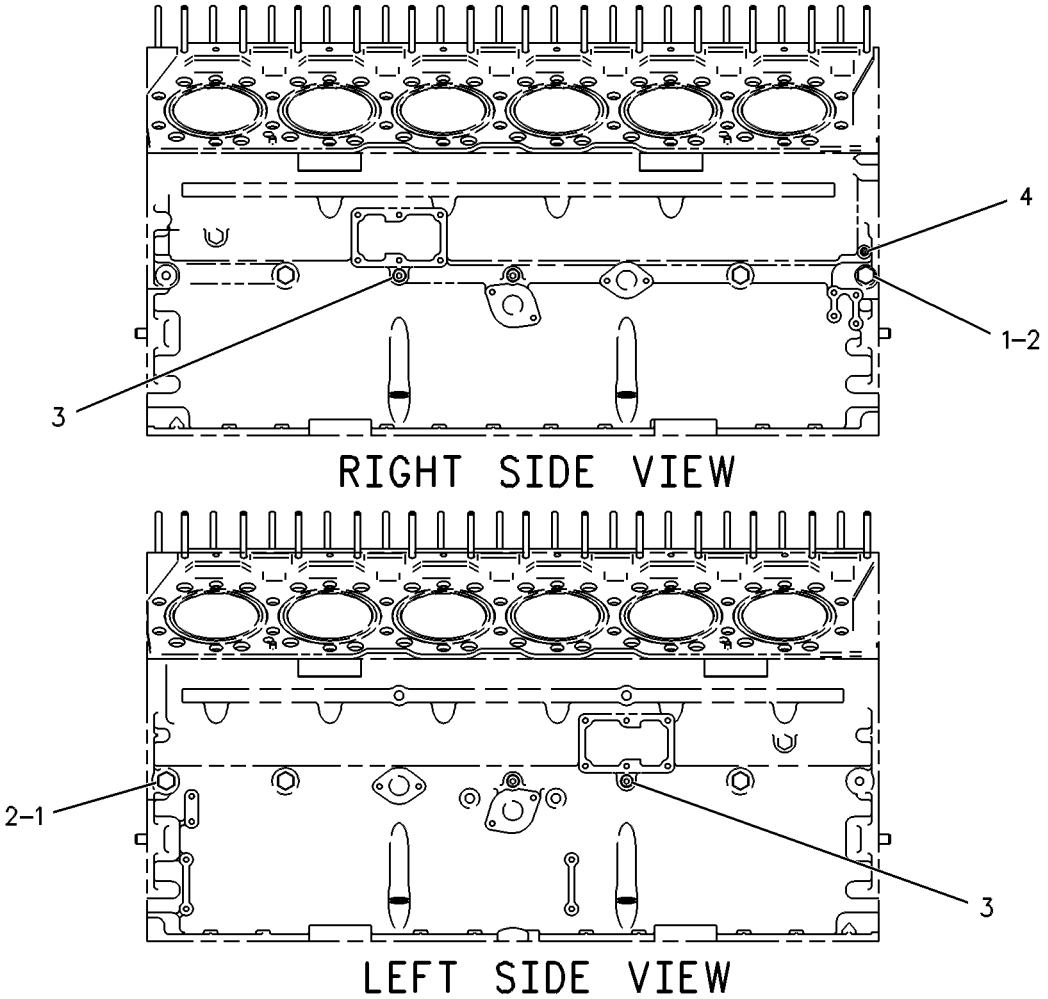

GRAPHIC #1 g00086446

BASIC ENGINE

135-9980 PLUG GP-CYLINDER BLOCK

S/N: 80M354-UP
PART OF 115-7641, 135-7810, 155-0058 ENGINE AR
ALSO AN ATTACHMENT

SMCS-1201 **i01232089**

NOTE	REF NO	GRAPHIC REF	PART NUMBER	QTY	PART NAME 1 2 3 4 5 6 (PRODUCT LEVEL)	SEE PAGE
	1	1	**9S-4190**	5	PLUG-O-RING (7/16-20 THD)	
	2	1	**6V-4589**	6	SEAL-O-RING (19.18MM ID)	
	3	1	**7W-6534**	4	PLUG-PIPE (3/8-18 NPTF THD)	
	4	1	**8T-6757**	1	PLUG-PIPE (1/8-27 NPTF)	
	5	1	**5P-1404**	1	ADAPTER-O-RING (STRAIGHT THREAD)	
	6	1	**6V-3965**	1	FITTING AS	
	7	1	**6V-5049**	1	SEAL-O-RING (11.89MM ID)	
	8	1	**6V-0852**	1	CAP-DUST	

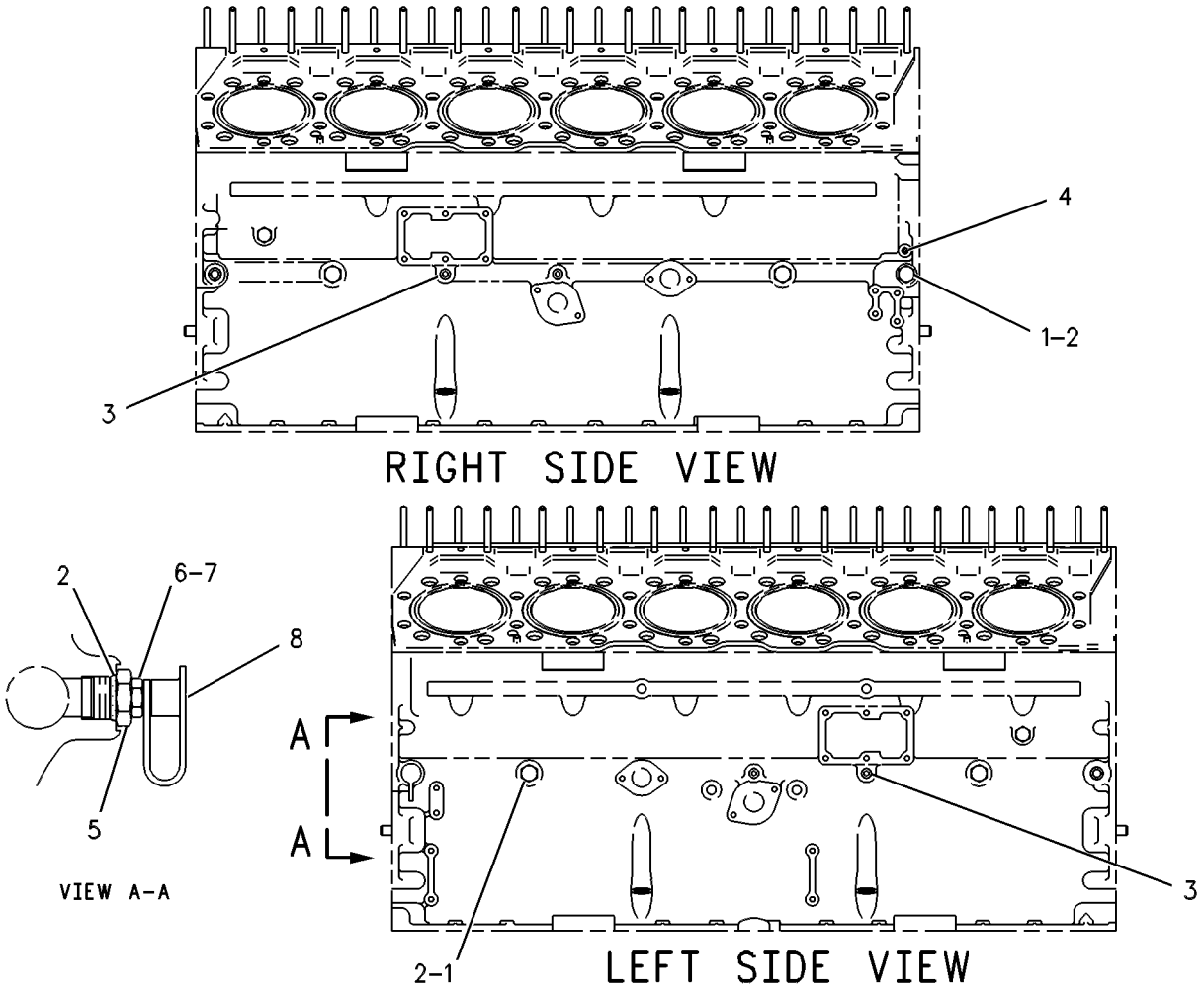

GRAPHIC #1 g00269037

BASIC ENGINE

124-4456 PLUG GP-CYLINDER HEAD

S/N: 80M1-UP
PART OF 115-7641, 135-7810, 155-0058 ENGINE AR
ALSO AN ATTACHMENT

SMCS-1100 **i01740004**

NOTE	REF NO	GRAPHIC REF	PART NUMBER	QTY	PART NAME 1 2 3 4 5 6 (PRODUCT LEVEL)	SEE PAGE
	1	1	**8T-6762**	6	PLUG-PIPE (1/2-14 NPTF THD)	
	2	1	**7X-7731**	2	PLUG-PIPE (3/4-14 NPTF THD)	
	3	1	**5P-0063**	3	PLUG-CUP (1.764 IN OD)	
	4	1	**4N-0932**	2	PLUG-CUP (2.27 IN OD)	

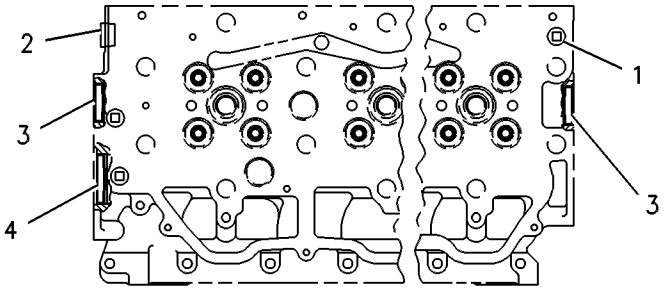

LEFT SIDE HEAD

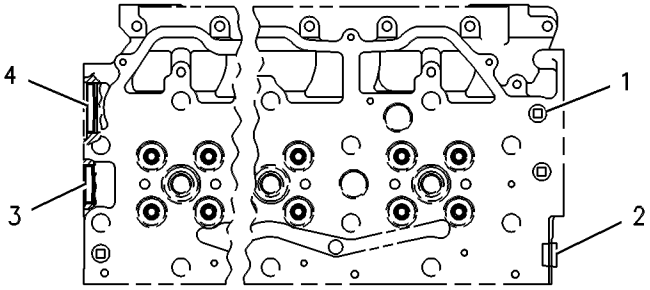

RIGHT SIDE HEAD

GRAPHIC #1 g00086474

BASIC ENGINE

116-5255 PULLEY GP-CRANKSHAFT

S/N: 3KR1-1410

PART OF 203-7802 FAN AR, 180-6632 SUPPRESSION AR-SOUND

ALSO AN ATTACHMENT

SMCS-1205 **i00601450**

NOTE	REF NO	GRAPHIC REF	PART NUMBER	QTY	PART NAME 1 2 3 4 5 6 (PRODUCT LEVEL)	SEE PAGE
	1	1	**116-5256**	1	PULLEY-CRANKSHAFT	
	2	1	**3D-9348**	4	BOLT (1/2-13X7.75IN)	

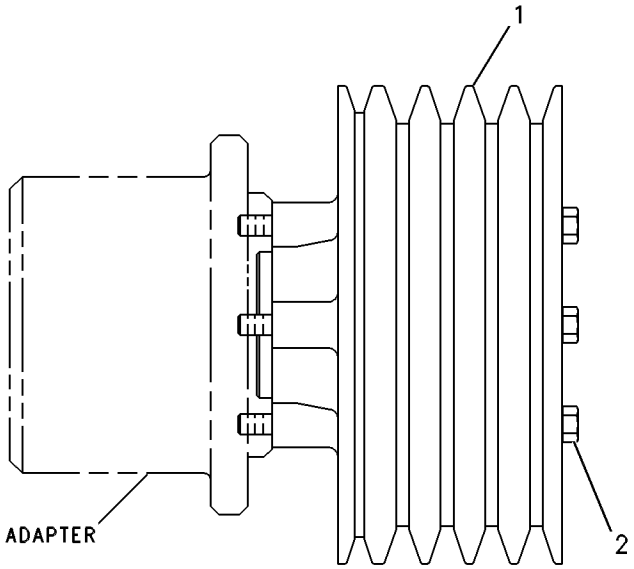

GRAPHIC #1 g00253436

BASIC ENGINE

180-4525 PULLEY GP-CRANKSHAFT

S/N: 3KR1411-UP

FOR USE WITH DIRECT DRIVE FAN OPTION

SMCS-1205 **i01285784**

NOTE	REF NO	GRAPHIC REF	PART NUMBER	QTY	PART NAME 1 2 3 4 5 6 (PRODUCT LEVEL)	SEE PAGE
	1	1	**180-3921**	1	PULLEY-CRANKSHAFT	
	2	1	**3D-9348**	4	BOLT (1/2-13X7.75IN)	

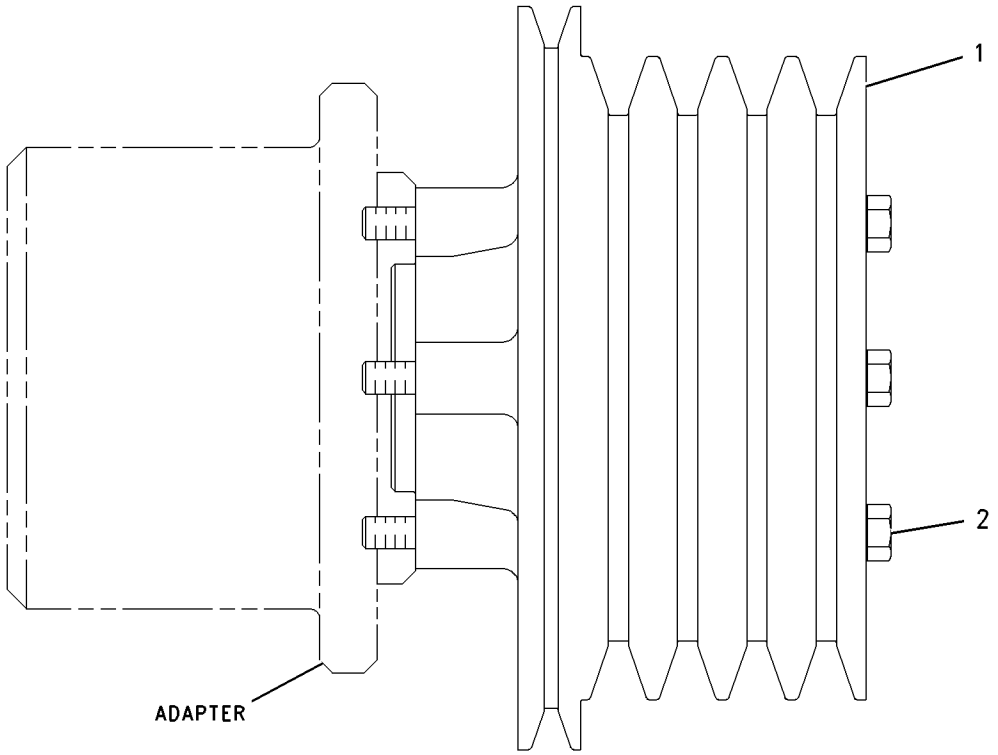

GRAPHIC #1 g00683904

BASIC ENGINE

107-1954 ROCKER ARM GP

S/N: 80M1-UP
PART OF 108-1874 VALVE MECHANISM GP
ALSO AN ATTACHMENT

SMCS-1102, 1123 **i01390323**

NOTE	REF NO	GRAPHIC REF	PART NUMBER	QTY	PART NAME 1 2 3 4 5 6 (PRODUCT LEVEL)	SEE PAGE
	1	1	**134-2263**	2	RING-RETAINING	
	2	1	**2N-7228**	2	WASHER (1X1.5X.03 IN THK)	
	3	1	**4N-5614**	2	ROCKER ARM AS	
	4	1	**108-5603**	2	SCREW-ROCKER ADJUSTMENT	
	5	1	**9L-7712**	2	NUT (3/8-24 THD)	
	6	1	**122-0163**	1	BRACKET-SHAFT	
	7	1	**6V-3536**	2	DOWEL	
	8	1	**135-3225**	1	SHAFT AS	

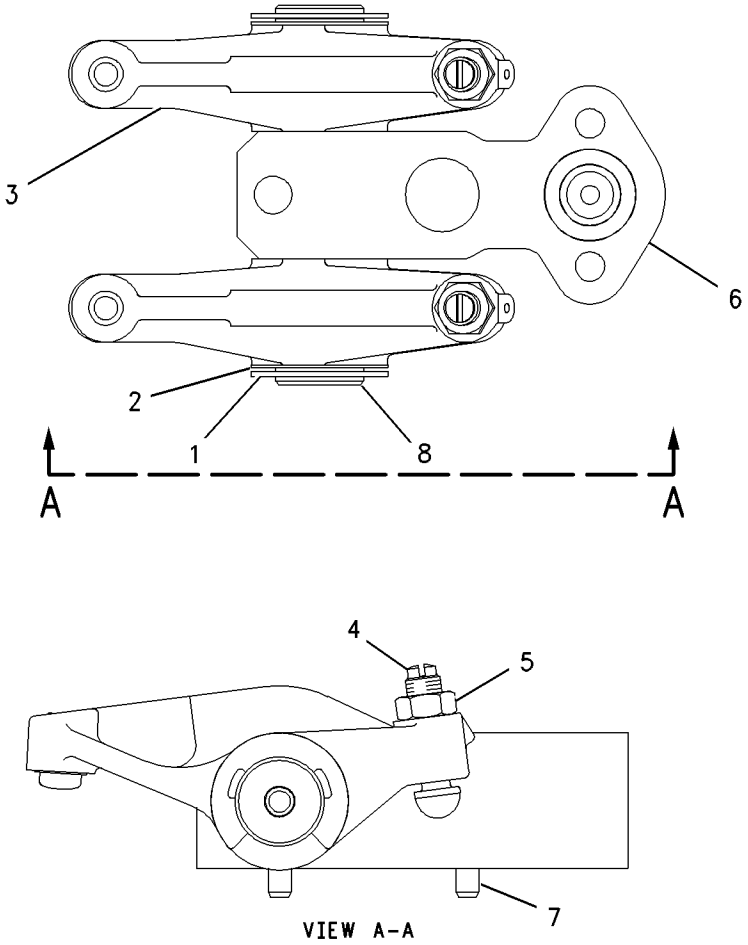

GRAPHIC #1 g00678432

BASIC ENGINE

4P-5544 SUPPORT GP-ENGINE

S/N: 3KR1-UP

SMCS-1152, 1153, 1154 **i01740006**

NOTE	REF NO	GRAPHIC REF	PART NUMBER	QTY	PART NAME 1 2 3 4 5 6 (PRODUCT LEVEL)	SEE PAGE
	1	1	**6N-3897**	2	SUPPORT-ENGINE	
	2	1	**2A-1538**	12	BOLT (3/4-10X2.25 IN)	
	3	1	**6Y-2090**	2	MOUNT AS	
	4	1	**6N-3896**	2	CAP	
	5	1	**4P-5546**	2	SUPPORT	
	6	1	**3B-2968**	4	BOLT (3/4-10X3.5 IN)	
	7	1	**1D-4627**	4	BOLT (7/8-9X3 IN)	
	8	1	**1D-4631**	4	BOLT (7/8-9X4.25 IN)	
	9	1	**5P-8248**	16	WASHER-HARD (20X36.5X3.5MM THK)	
	10	1	**5P-8249**	8	WASHER-HARD (24X41.5X4MM THK)	

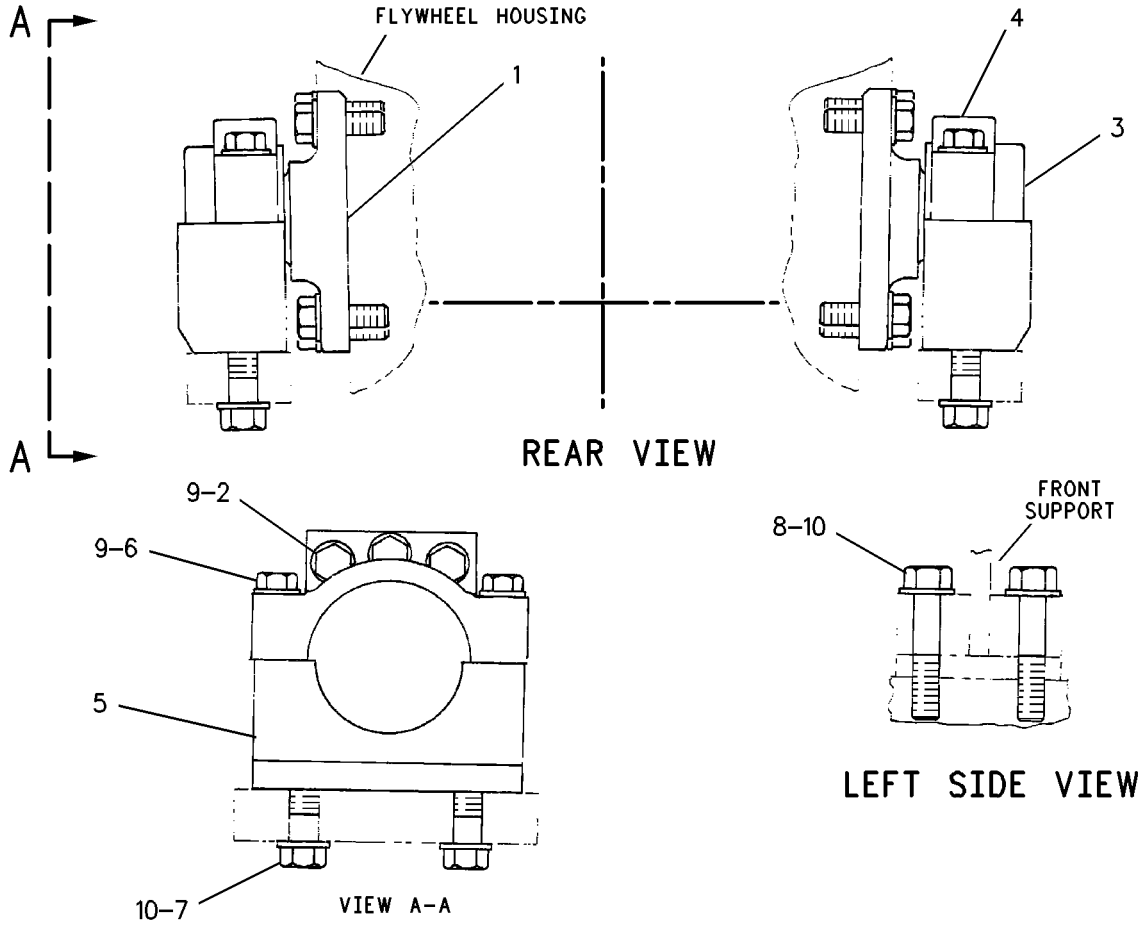

GRAPHIC #1 g00234594

BASIC ENGINE

6N-1378 SUPPORT GP-ENGINE—FRONT

S/N: 80M1-UP
PART OF 115-7641, 135-7810, 155-0058 ENGINE AR
ALSO AN ATTACHMENT

SMCS-1152, 1153, 1154 **i01740008**

NOTE	REF NO	GRAPHIC REF	PART NUMBER	QTY	PART NAME 1 2 3 4 5 6 (PRODUCT LEVEL)	SEE PAGE
	1	1	**1A-1135**	4	BOLT (5/8-11X2 IN)	
	2	1	**155-4788**	1	SUPPORT AS-ENGINE	
	3	1	**5P-8247**	4	WASHER-HARD (17X32X3.5MM THK)	

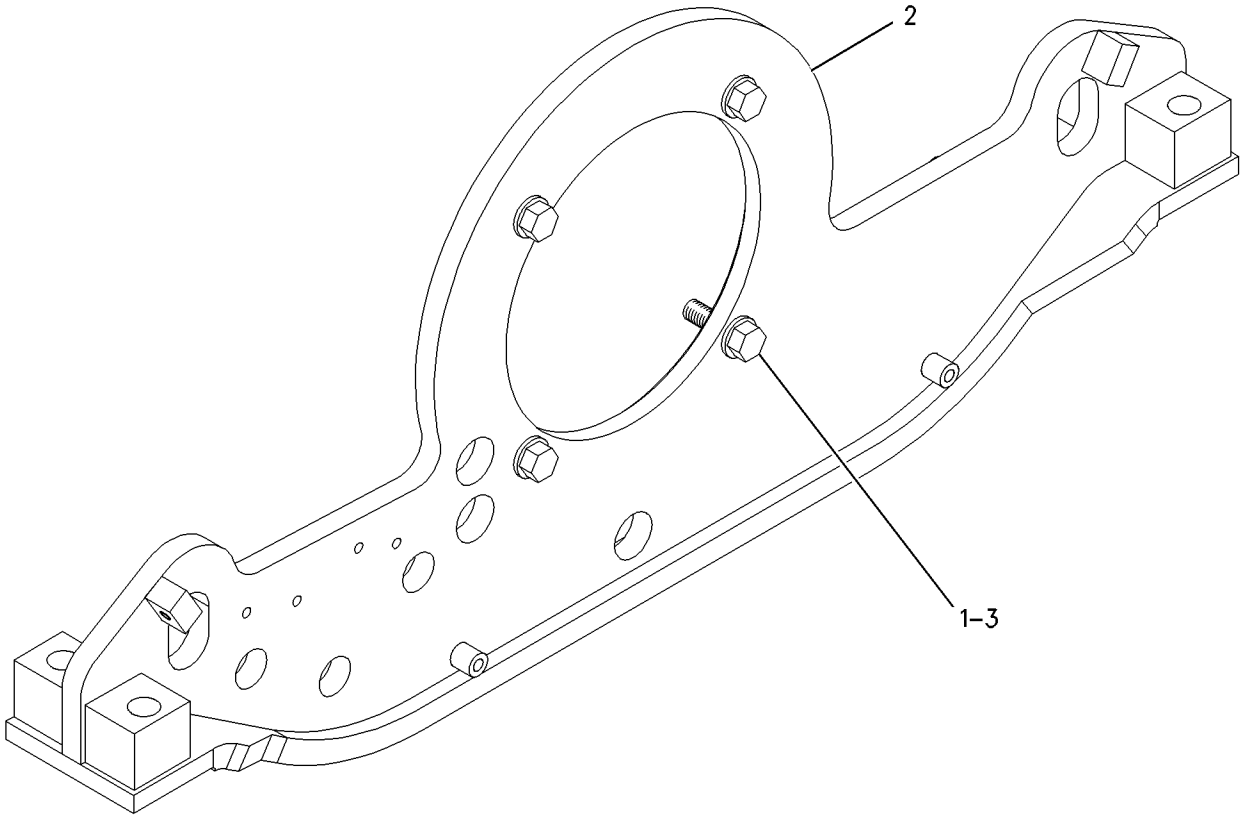

GRAPHIC #1 g00674296

BASIC ENGINE

7N-1346 TRUNNION GP-ENGINE

S/N: 80M1-UP

PART OF 115-7641, 135-7810, 155-0058 ENGINE AR

ALSO AN ATTACHMENT

SMCS-1152, 1153, 1154 **i00581402**

NOTE	REF NO	GRAPHIC REF	PART NUMBER	QTY	PART NAME 1 2 3 4 5 6 (PRODUCT LEVEL)	SEE PAGE
C	1	1	**1W-3014**	1	ADAPTER AS	
	2	1	**4N-0683**	2	DOWEL	
	3	1	**7N-1210**	1	MOUNT AS (RESILIENT)	
C	4	1	**0S-1573**	6	BOLT (1/2-13X4IN)	
C	5	1	**1D-4569**	2	BOLT (1/2-13X4.25IN)	

C-CHANGE FROM PREVIOUS TYPE

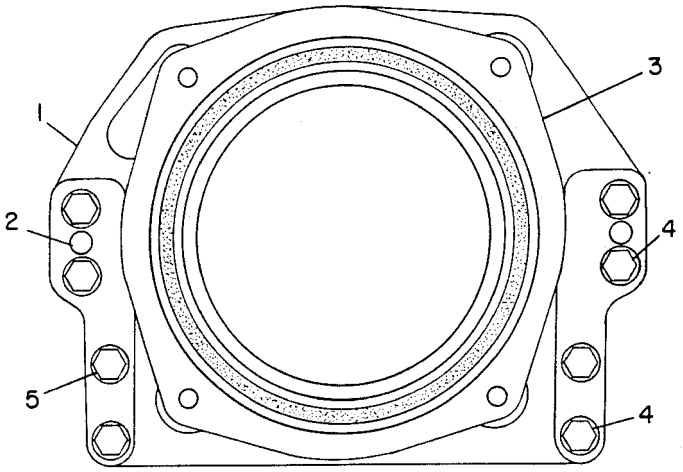

GRAPHIC #1 g00182241

BASIC ENGINE

133-6446 V-BELT SET

S/N: 3KR1-UP

FOR USE WITH TEMPERATURES DOWN TO -65 DEGREES FAHRENHEIT

FIELD INSTALLATION

SMCS-1357 **i01400393**

NOTE	PART NUMBER	QTY	PART NAME 1 2 3 4 5 6 (PRODUCT LEVEL)	SEE PAGE
	133-6443	1	V-BELT	
	133-6445	1	V-BELT SET (INCLUDES 4 BELTS)	

<END>

BASIC ENGINE

108-1874 VALVE MECHANISM GP

S/N: 80M1-UP

PART OF 115-7641, 135-7810, 155-0058 ENGINE AR

ALSO AN ATTACHMENT

SMCS-1102, 1112, 1121, 1123, 1208, 1209 **i01740009**

NOTE	REF NO	GRAPHIC REF	PART NUMBER	QTY	PART NAME 1 2 3 4 5 6 (PRODUCT LEVEL)	SEE PAGE
Y	1	1	*107-1954*	12	ROCKER ARM GP	105
	2	1	**100-6889**	24	BRIDGE-VALVE	
	3	1	**2P-9845**	12	BOLT (3/4-16X11.5 IN)	
		1	**5H-1504**	12	WASHER-HARD (20X33.5X5MM THK)	
	4	1	**4W-5998**	24	PUSHROD AS	
	5	1	**6N-6872**	24	SPRING-GUIDE	
	6	1	**101-7788**	24	LIFTER AS-VALVE	
	7	1	**5M-2894**	12	WASHER-HARD (10.2X18.5X2.5MM THK)	
	8	1	**0L-1143**	12	BOLT (3/8-16X2.50 IN)	
	9	1	**116-7220**	12	SEAL-RECTANGULAR	

Y-SEPARATE ILLUSTRATION

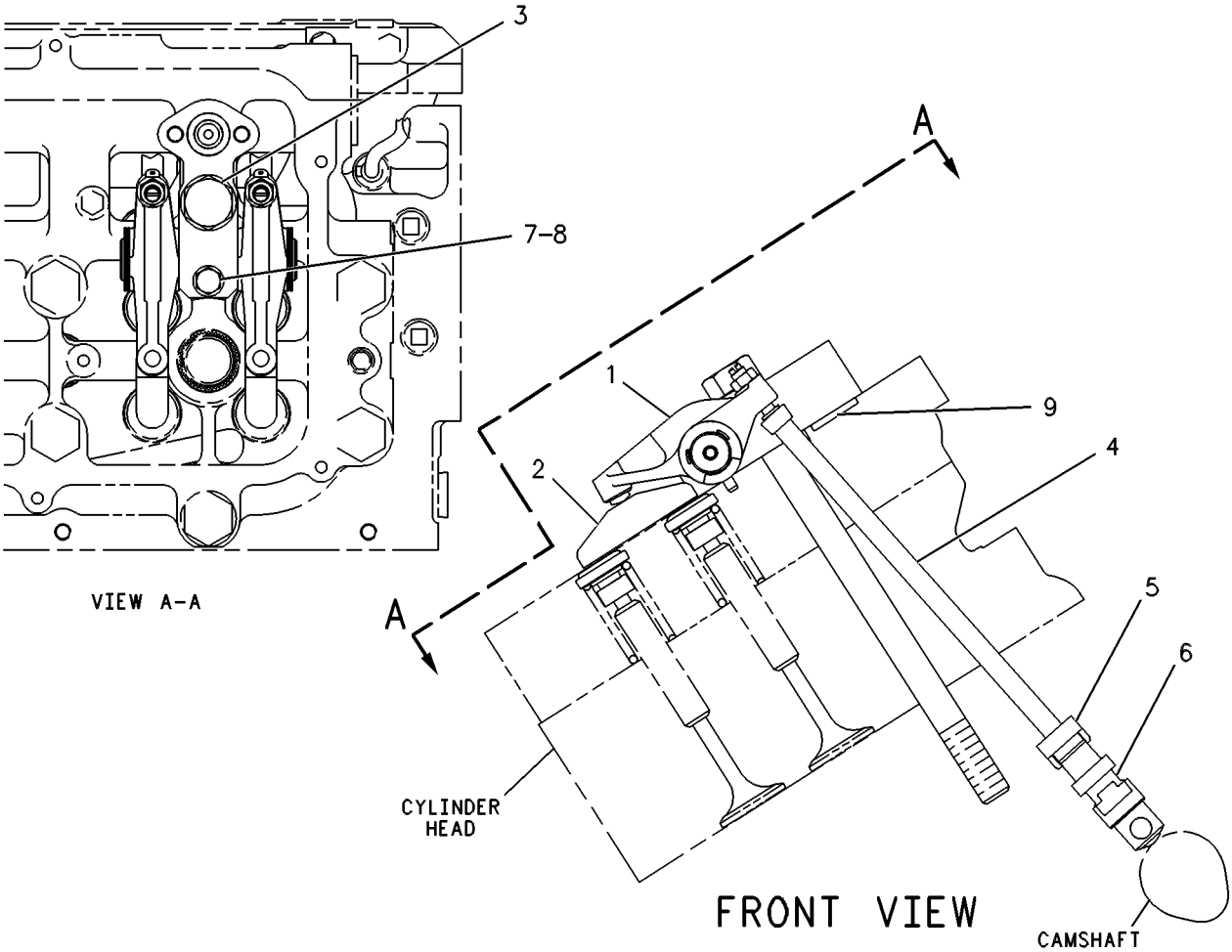

GRAPHIC #1 g00086438

BASIC ENGINE

128-3339 YOKE GP

S/N: 3KR1-UP

SMCS-1207, 3108 **i01446359**

NOTE	REF NO	GRAPHIC REF	PART NUMBER	QTY	PART NAME 1 2 3 4 5 6 (PRODUCT LEVEL)	SEE PAGE
	1	1	**128-3340**	1	FLANGE-STUB	
	2	1	**128-3341**	1	COVER	
	3	1	**7X-0343**	2	BOLT (5/8-11X1.25 IN)	
	4	1	**6V-8260**	1	SEAL-O-RING (123.42MM ID)	
	5	1	**2S-3029**	1	BALL BEARING	
	6	1	**128-3813**	1	SEAL-LIP TYPE	
	7	1	**1L-4775**	1	RING-RETAINING	

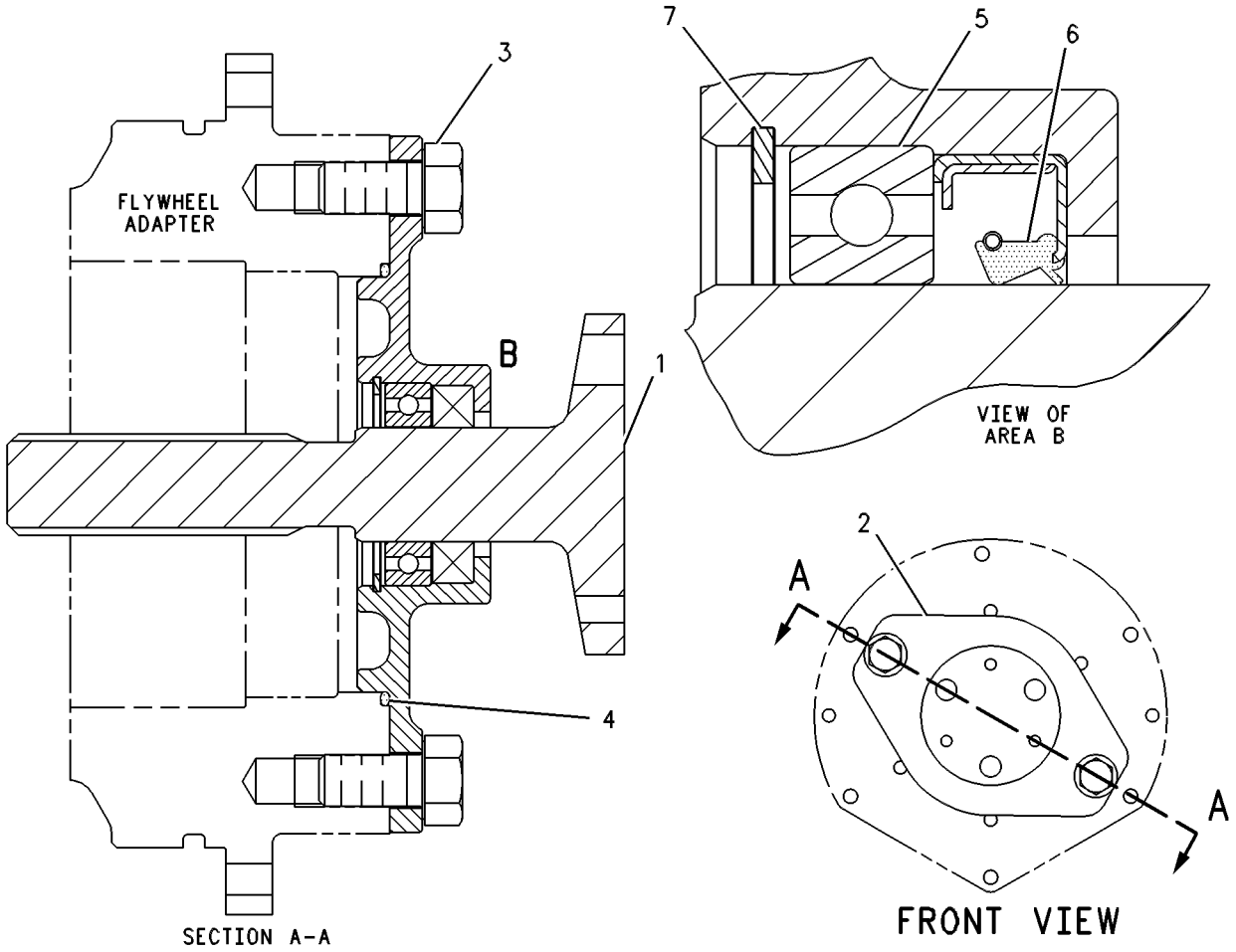

GRAPHIC #1 g00256750

BASIC ENGINE

133-0771 YOKE GP

S/N: 3KR1-UP
PART OF 130-3867 MACHINE AR-COLD WEATHER
FOR USE WITH EXTREME COLD WEATHER CONDITIONS
AN ATTACHMENT

SMCS-1207, 3108 **i01051614**

NOTE	REF NO	GRAPHIC REF	PART NUMBER	QTY	PART NAME 1 2 3 4 5 6 (PRODUCT LEVEL)	SEE PAGE
	1	1	**128-3340**	1	FLANGE-STUB	
	2	1	**163-1532**	1	COVER-REAR GEAR	
	3	1	**7X-0343**	2	BOLT (5/8-11X1.25IN)	
	4	1	**6V-8260**	1	SEAL-O-RING (123.42MM ID)	
	5	1	**2S-3029**	1	BALL BEARING	
	6	1	**133-0770**	1	SEAL	
	7	1	**1L-4775**	1	RING-RETAINING	

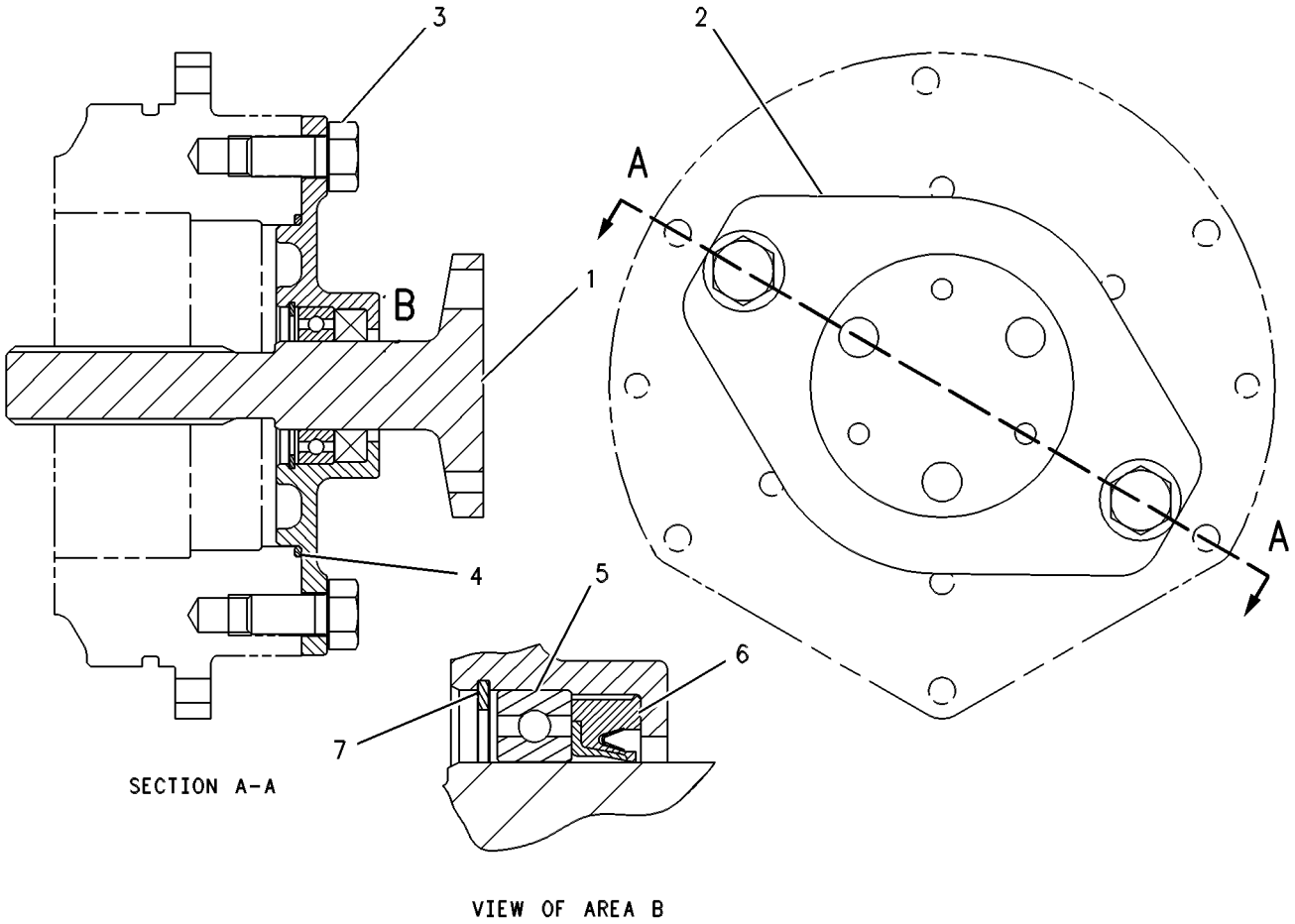

GRAPHIC #1 g00280701

4N-2481 FASTENER GP-OIL PUMP MOUNTING

S/N: 80M1-UP
PART OF 115-7641, 135-7810, 155-0058 ENGINE AR
ALSO AN ATTACHMENT

SMCS-1304 **i01446823**

NOTE	REF NO	GRAPHIC REF	PART NUMBER	QTY	PART NAME 1 2 3 4 5 6 (PRODUCT LEVEL)	SEE PAGE
	1	1	**0L-1143**	2	BOLT (3/8-16X2.50 IN)	
	2	1	**0S-1590**	1	BOLT (3/8-16X2 IN)	
	3	1	**5M-2894**	3	WASHER-HARD (10.2X18.5X2.5MM THK)	

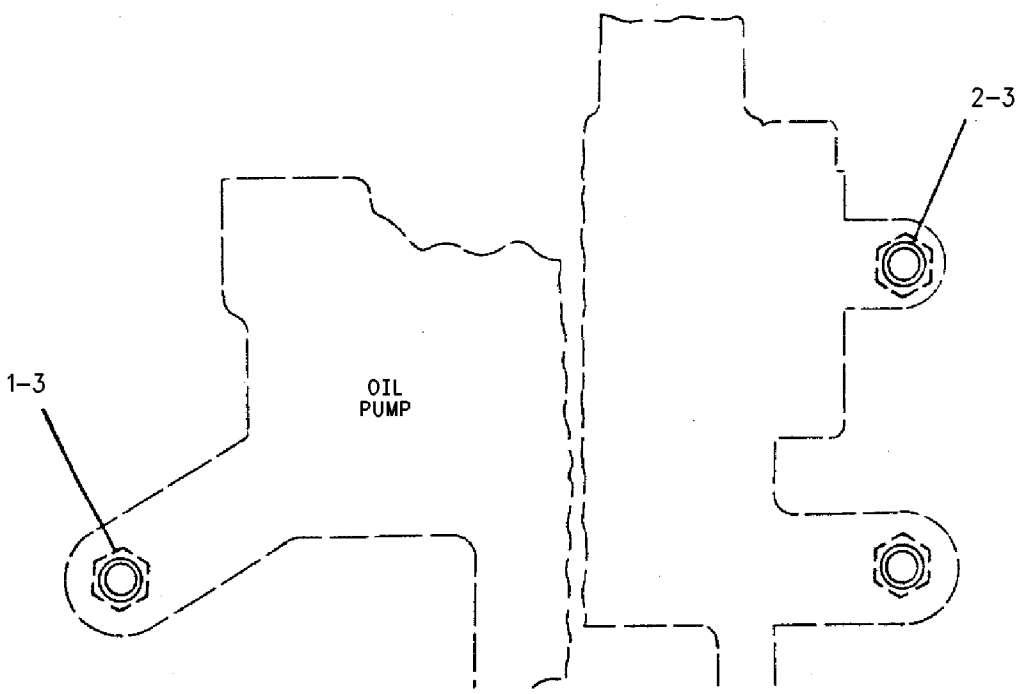

GRAPHIC #1 g00604525

LUBRICATION SYSTEM

127-9374 FILLER GP-ENGINE OIL

S/N: 80M1-UP
PART OF 115-7641, 135-7810, 155-0058 ENGINE AR
ALSO AN ATTACHMENT

SMCS-1316 **i00764837**

NOTE	REF NO	GRAPHIC REF	PART NUMBER	QTY	PART NAME 1 2 3 4 5 6 (PRODUCT LEVEL)	SEE PAGE
	1	1	**128-0598**	1	TUBE AS-OIL FILLER	
	2	1	**8S-4212**	1	RIVET	
	3	1	**1W-3862**	1	HASP-OIL FILLER	
	4	1	**6N-2206**	1	CAP AS-FILLER	
	5	1	**2N-8109**	1	CLAMP	
	6	1	**6V-3831**	1	SEAL-O-RING (53.34MM ID)	

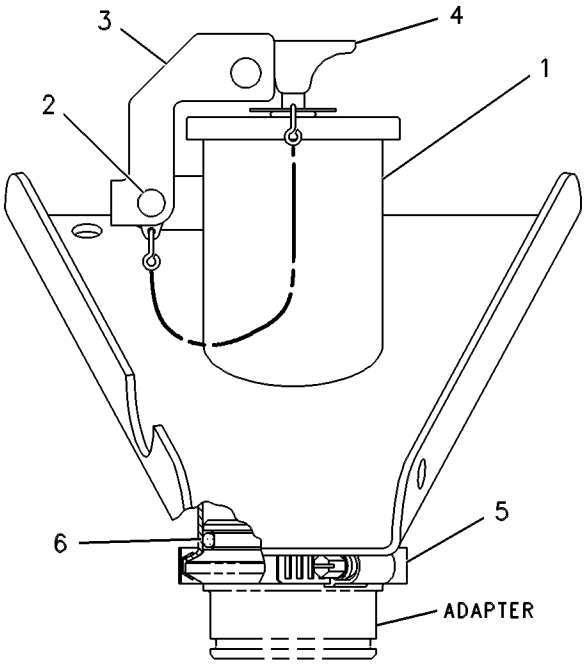

GRAPHIC #1 g00253350

MEMORANDA

LUBRICATION SYSTEM

125-5825 FUMES DISPOSAL GP

S/N: 3KR1-UP

SMCS-1317 **i01740010**

NOTE	REF NO	GRAPHIC REF	PART NUMBER	QTY	PART NAME 1 2 3 4 5 6 (PRODUCT LEVEL)	SEE PAGE
E	1	1	**5P-1255**	4	HOSE (9CM EACH)	
	2	1	**9M-2904**	9	CLAMP-HOSE	
	3	1	**125-5826**	1	HOSE	
	4	1	**5P-0597**	1	CLAMP-HOSE	
	5	1	**125-5827**	1	BRACKET AS	
		1	**1F-0750**	1	NUT-WELD (3/8-16 THD)	
	6	1	**4L-6454**	5	BOLT (3/8-16X1 IN)	
	7	1	**8T-4896**	6	WASHER-HARD (10.2X18.5X2.5MM THK)	
	8	1	**8C-3121**	1	BOLT (5/16-18X1.50 IN)	
	9	1	**8T-4224**	1	WASHER-HARD (8.8X16X2MM THK)	
	10	1	**125-5859**	1	TUBE	
	11	1	**125-5829**	1	TUBE AS-FUMES DISPOSAL	
	12	1	**2S-7010**	1	CLIP	
	13	1	**2S-2053**	1	CLIP	
	14	1	**109-9758**	1	BRACKET AS	
	15	1	**138-1876**	1	TUBE AS	
	16	1	**5M-3062**	1	BOLT (3/8-16X0.75 IN)	
	17	1	**5P-1075**	2	WASHER-HARD (10.2X22.5X3MM THK)	
	18	1	**5N-9379**	1	HOSE	
	19	1	**5P-2369**	1	CLIP	
	20	1	**138-1877**	1	BRACKET AS	
	21	1	**5S-7379**	1	BOLT (3/8-16X0.875 IN)	
	22	1	**6V-8801**	1	NUT (3/8-16 THD)	

E-ORDER BY THE CENTIMETER

125-5825 **FUMES DISPOSAL GP** *(contd.)* **i01740010**

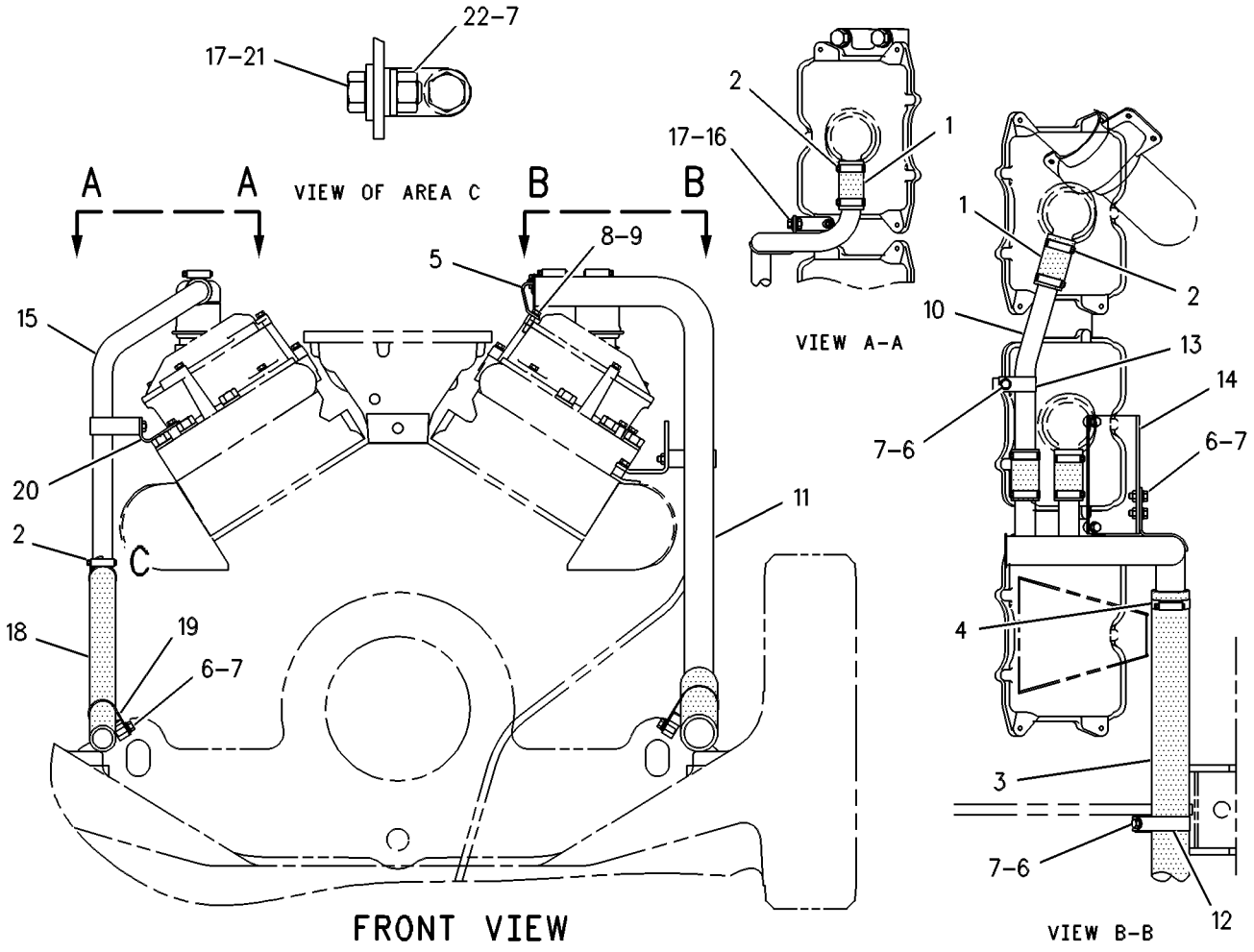

GRAPHIC #1 g00341843

LUBRICATION SYSTEM

128-0947 GAUGE GP-OIL LEVEL (DIPSTICK)

S/N: 80M1-UP
PART OF 115-7641, 135-7810, 155-0058 ENGINE AR
ALSO AN ATTACHMENT

SMCS-1326 **i00601299**

NOTE	REF NO	GRAPHIC REF	PART NUMBER	QTY	PART NAME 1 2 3 4 5 6 (PRODUCT LEVEL)	SEE PAGE
	1	1	**135-9942**	1	GAUGE AS-OIL LEVEL (DIPSTICK)	
	2	1	**4P-0707**	2	CLAMP AS	
	3	1	**0L-1143**	1	BOLT (3/8-16X2.5IN)	
	4	1	**5M-2894**	2	WASHER (2.5MM THK)	
	5	1	**9S-8752**	1	NUT-FULL (3/8-16 THD)	
	6	1	**127-8954**	1	TUBE AS	
	7	1	**118-5068**	1	SEAL-O-RING (15.54MM ID)	

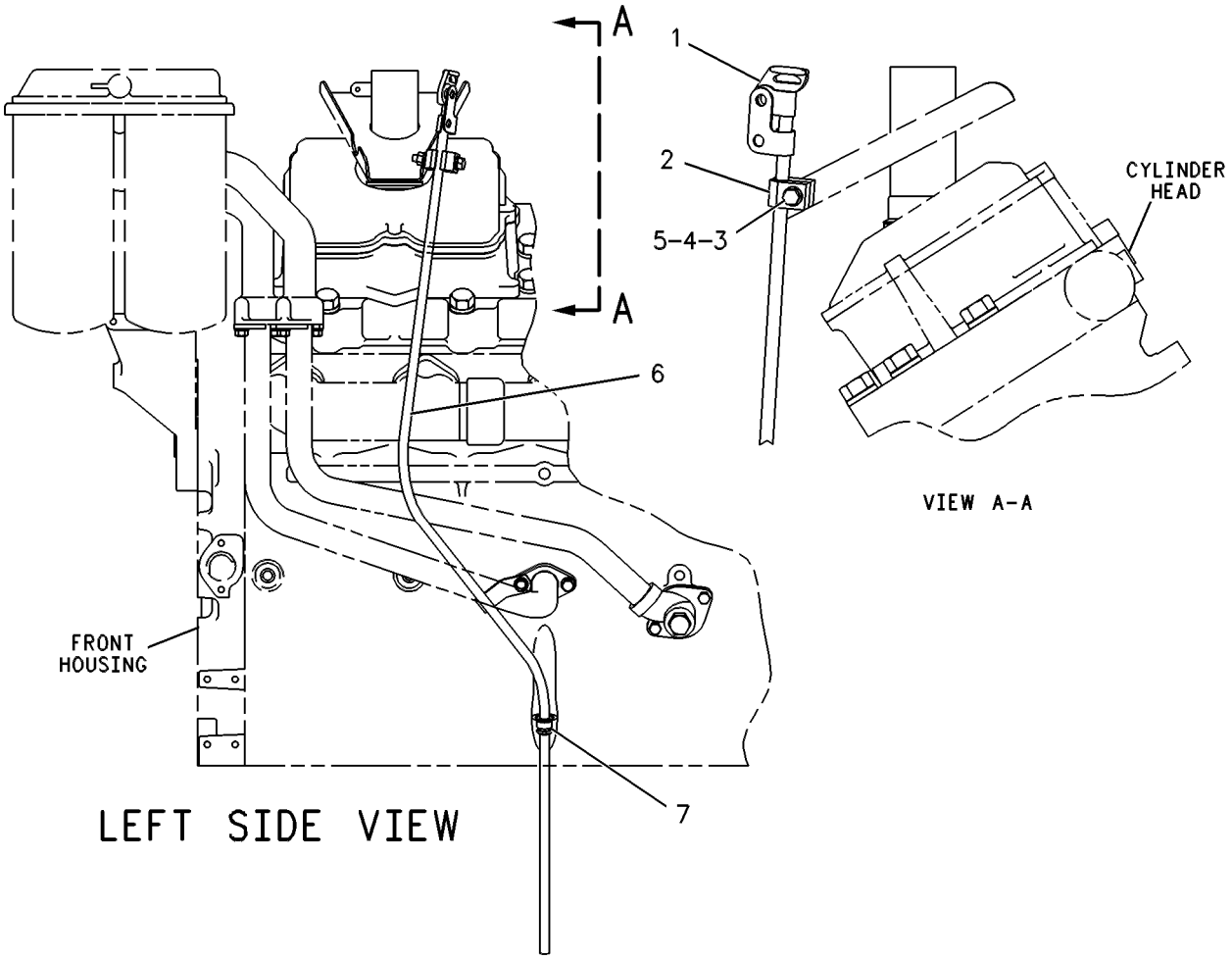

GRAPHIC #1 g00253357

MEMORANDA

LUBRICATION SYSTEM

7C-4485 LINES GP-ENGINE OIL

S/N: 80M1-UP

PART OF 115-7641, 135-7810, 155-0058 ENGINE AR

ALSO AN ATTACHMENT

SMCS-1307 **i01749243**

NOTE	REF NO	GRAPHIC REF	PART NUMBER	QTY	PART NAME 1 2 3 4 5 6 (PRODUCT LEVEL)	SEE PAGE
	1	1	**0L-1351**	3	BOLT (3/8-16X0.875 IN)	
	2	1	**5M-2894**	18	WASHER-HARD (10.2X18.5X2.5MM THK)	
	3	1	**8N-6740**	1	RETAINER	
	4	1	**5P-8068**	4	SEAL-O-RING	
	5	1	**7N-6253**	1	ELBOW	
	6	1	**8N-6739**	1	RING-RETAINING	
	7	1	**5H-0135**	1	GASKET	
	8	1	**0S-1588**	2	BOLT (3/8-16X1.25 IN)	
	9	1	**0S-1591**	4	BOLT (3/8-16X1.5 IN)	
	10	1	**8N-0610**	1	TUBE AS	
	11	1	**8N-0612**	1	TUBE AS	
	12	1	**0S-1595**	1	BOLT (1/2-13X1.25 IN)	
	13	1	**0S-1594**	11	BOLT (3/8-16X1 IN)	
	14	1	**9S-8752**	4	NUT-FULL (3/8-16 THD)	
	15	1	**1W-8795**	1	BRACKET	
	16	1	**7N-6252**	1	TUBE AS-LH	
	17	1	**6V-3830**	2	SEAL-O-RING	
	18	1	**7C-4938**	1	PLATE-FRONT PAN	
	19	1	**2L-2685**	2	CLIP (SLOT)	
	20	1	**5K-9592**	2	ANGLE	
	21	1	**8S-9191**	2	BOLT (3/8-16X4 IN)	
	22	1	**8N-0397**	1	PIPE AS-PUMP SUCTION	
	23	1	**4N-0913**	1	SCREEN AS-BELL	
	24	1	**4N-0914**	1	CLIP	
	25	1	**8N-2104**	1	BELL AS-SUCTION	
		1	**9F-2978**	2	NUT-WELD (3/8-16 THD)	
	26	1	**0S-1608**	1	BOLT (3/8-16X3.75 IN)	
	27	1	**8J-4351**	1	SEAL-O-RING	
	28	1	**8N-0396**	1	SUPPORT	
	29	1	**2S-2053**	1	CLIP	
	30	1	**7N-9212**	1	TUBE AS	
	31	1	**9L-9132**	3	WASHER (10.2X25.5X2.5MM THK)	
	32	1	**5P-8245**	1	WASHER-HARD (13.5X25.5X3MM THK)	
	33	2	**2W-7561**	1	TUBE AS	
	34	2	**0S-1594**	10	BOLT (3/8-16X1 IN)	
	35	2	**4N-8770**	1	ELBOW-COOLER OUTLET	
	36	2	**061-7540**	2	SEAL-O-RING	
	37	2	**4F-8965**	2	BOLT (7/16-14X1.125 IN)	
	38	2	**0T-0768**	3	BOLT (7/16-14X1.75 IN)	
		2	**1D-4556**	1	BOLT (7/16-14X2.75 IN)	
	39	2	**0S-1608**	1	BOLT (3/8-16X3.75 IN)	
	40	2	**109-0076**	3	SEAL-O-RING	
	41	2	**0T-0065**	1	BOLT (3/8-16X3.5 IN)	
	42	2	**4N-8411**	1	TUBE-COOLER BYPASS	
	43	2	**5H-2068**	1	COVER	
	44	2	**5P-8244**	2	WASHER (12X22.5X2.5MM THK)	
	45	2	**4N-0861**	1	COVER	
	46	2	**5M-2894**	3	WASHER-HARD (10.2X18.5X2.5MM THK)	
	47	2	**4N-0865**	1	GASKET	
	48	2	**9F-6304**	2	SPRING	
	49	2	**1P-1367**	2	PLUNGER	
	50	2	**0L-2070**	1	BOLT (3/8-16X2.25 IN)	
	51	2	**1W-1116**	1	BODY-BYPASS	
	52	2	**5P-9890**	2	SEAL-O-RING	
	53	2	**5P-8068**	1	SEAL-O-RING	

7C-4485 **LINES GP-ENGINE OIL** *(contd.)* **i01749243**

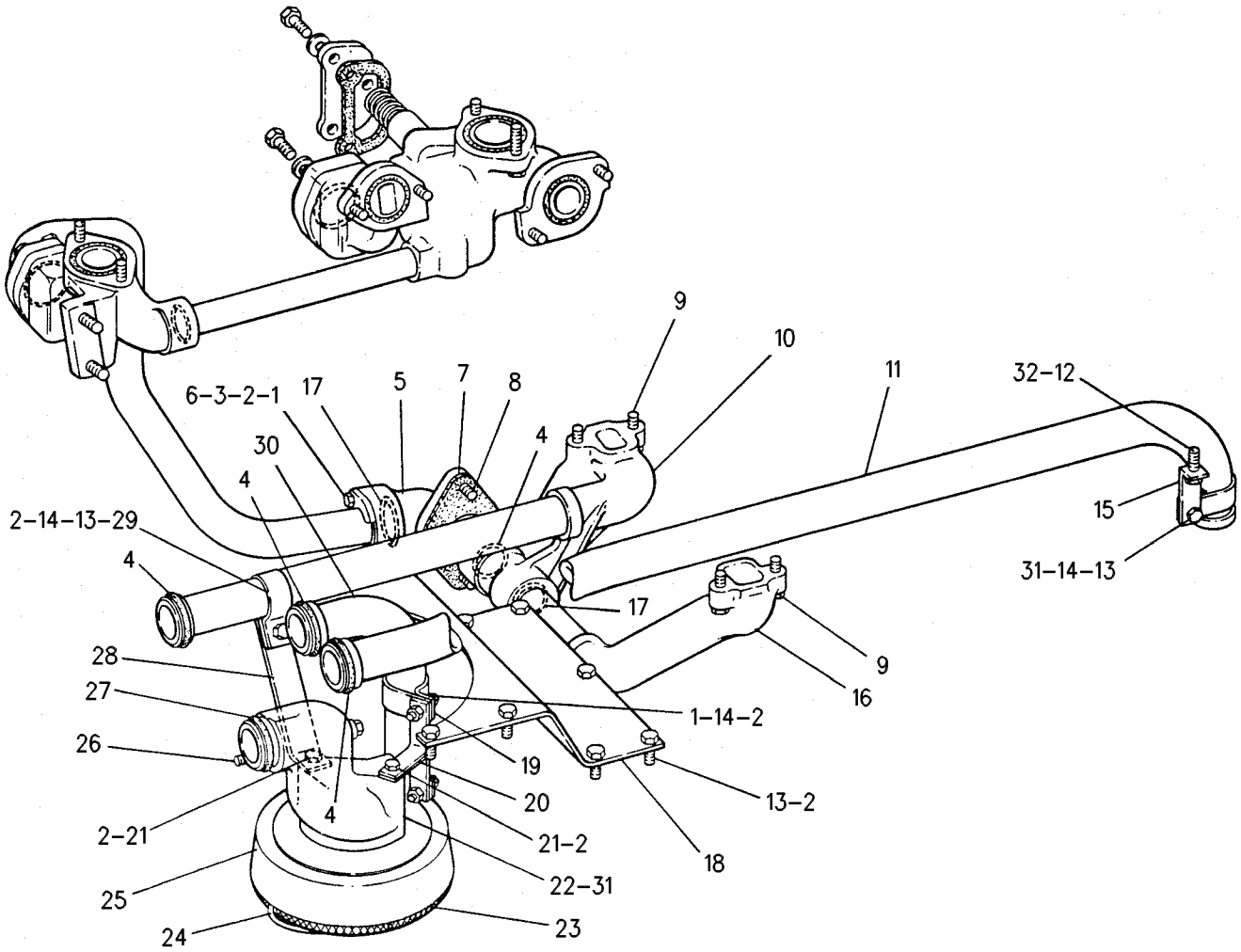

GRAPHIC #1 g00362746

7C-4485 **LINES GP-ENGINE OIL** *(contd.)* **i01749243**

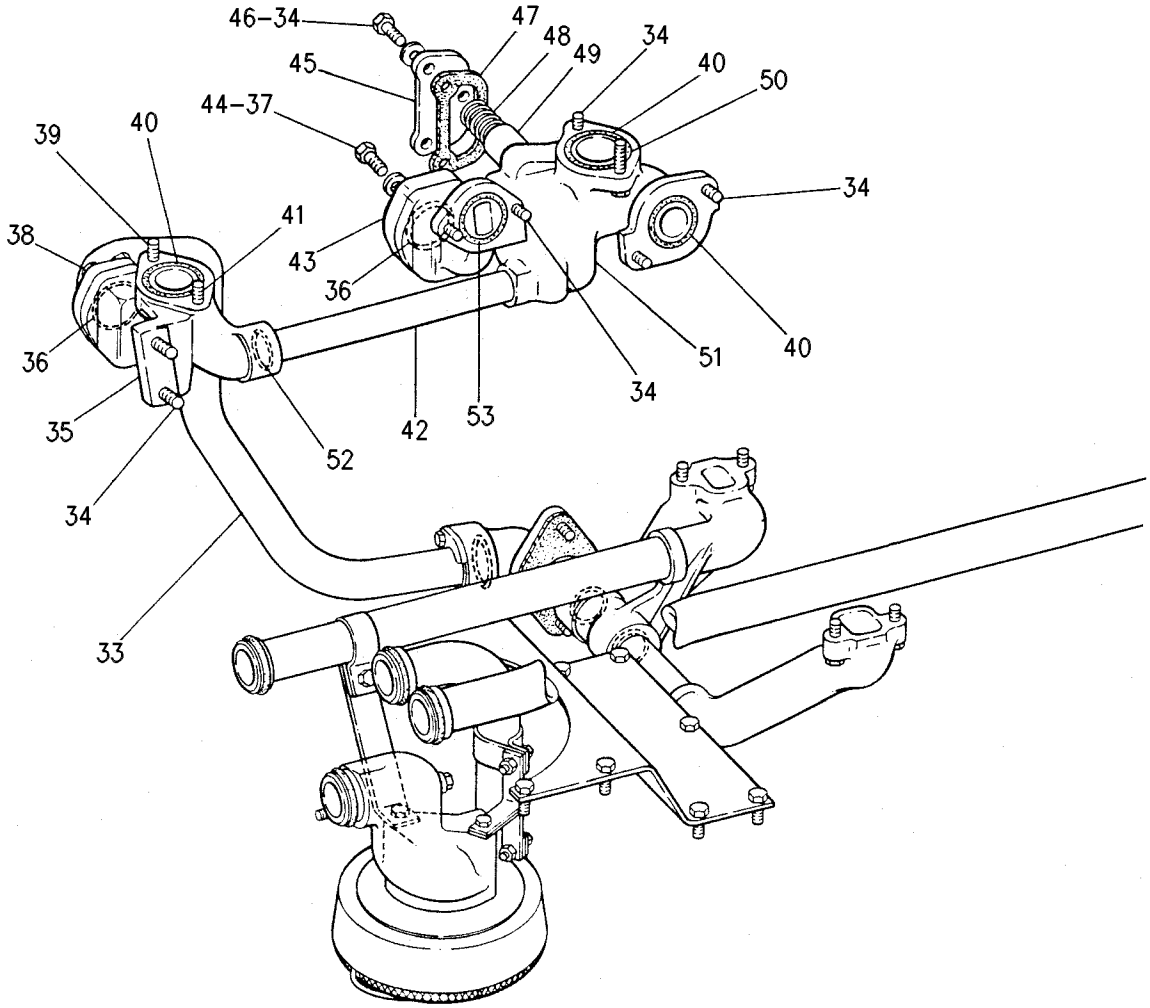

GRAPHIC #2 g00362747

MEMORANDA

LUBRICATION SYSTEM

116-4948 LINES GP-OIL SUPPLY

S/N: 3KR1-1410
FAN CLUTCH
PART OF 180-6632 SUPPRESSION AR-SOUND
ALSO AN ATTACHMENT

SMCS-1307 **i01740012**

NOTE	REF NO	GRAPHIC REF	PART NUMBER	QTY	PART NAME 1 2 3 4 5 6 (PRODUCT LEVEL)	SEE PAGE
Y	1	1	**124-2725**	1	VALVE & MTG GP-FAN DRIVE	142
	2	1	**8T-9377**	2	BOLT (3/8-16X2.25 IN)	
	3	1	**8T-4896**	8	WASHER-HARD (10.2X18.5X2.5MM THK)	
	4	1	**8M-2773**	2	CLIP	
	5	1	**5M-3062**	3	BOLT (3/8-16X0.75 IN)	
	6	1	**6V-8642**	1	CONNECTOR	
	7	1	**6V-5049**	4	SEAL-O-RING	
	8	1	**6V-8639**	1	CONNECTOR	
	9	1	**8L-2786**	2	SEAL-O-RING	
	10	1	**6V-9838**	1	TEE-SWIVEL	
	11	1	**135-0797**	1	TUBE AS	
	12	1	**6V-8632**	1	CONNECTOR	
	13	1	**8T-0130**	1	ELBOW	
	14	1	**8L-2746**	4	SEAL-O-RING	
I	15	1	**135-0796**	1	HOSE AS	
	16	1	**8L-2779**	6	SEAL-O-RING	
	17	1	**9X-6581**	1	NUT-ORFS	
	18	1	**6V-8938**	1	REDUCER-O-RING	
I	19	1	**123-5895**	1	HOSE AS	
	20	1	**6V-8636**	2	CONNECTOR	
	21	1	**8C-8988**	1	ELBOW	
	22	1	**6V-9873**	1	CONNECTOR-SEAL	
	23	1	**6V-9872**	1	CONNECTOR	
	24	1	**033-6033**	5	SEAL-O-RING	
	25	1	**6V-9837**	1	TEE-SWIVEL	
	26	1	**9X-6772**	1	STRAP-CABLE	
	27	1	**8E-3430**	1	STRIP AS	
		1	**1F-0750**	1	NUT-WELD (3/8-16 THD)	
	28	1	**4L-6454**	1	BOLT (3/8-16X1 IN)	
	29	1	**5P-1075**	1	WASHER-HARD (10.2X22.5X3MM THK)	
	30	1	**100-4336**	1	CLIP	
I	31	1	**123-5898**	1	HOSE AS	
	32	1	**8T-0788**	1	ELBOW	
I	33	1	**117-1601**	1	HOSE AS	
	34	1	**8S-0948**	1	CLIP	
	35	1	**6V-5048**	1	SEAL-O-RING	
	36	1	**6V-4589**	1	SEAL-O-RING	
	37	1	**153-3699**	1	BRACKET AS	
	38	1	**9B-7237**	3	BOLT (3/8-16X1.25 IN)	
	39	1	**6K-8178**	1	CLIP	

I-SEE HOSE FABRICATION GUIDE
Y-SEPARATE ILLUSTRATION

116-4948 **LINES GP-OIL SUPPLY** *(contd.)* **i01740012**

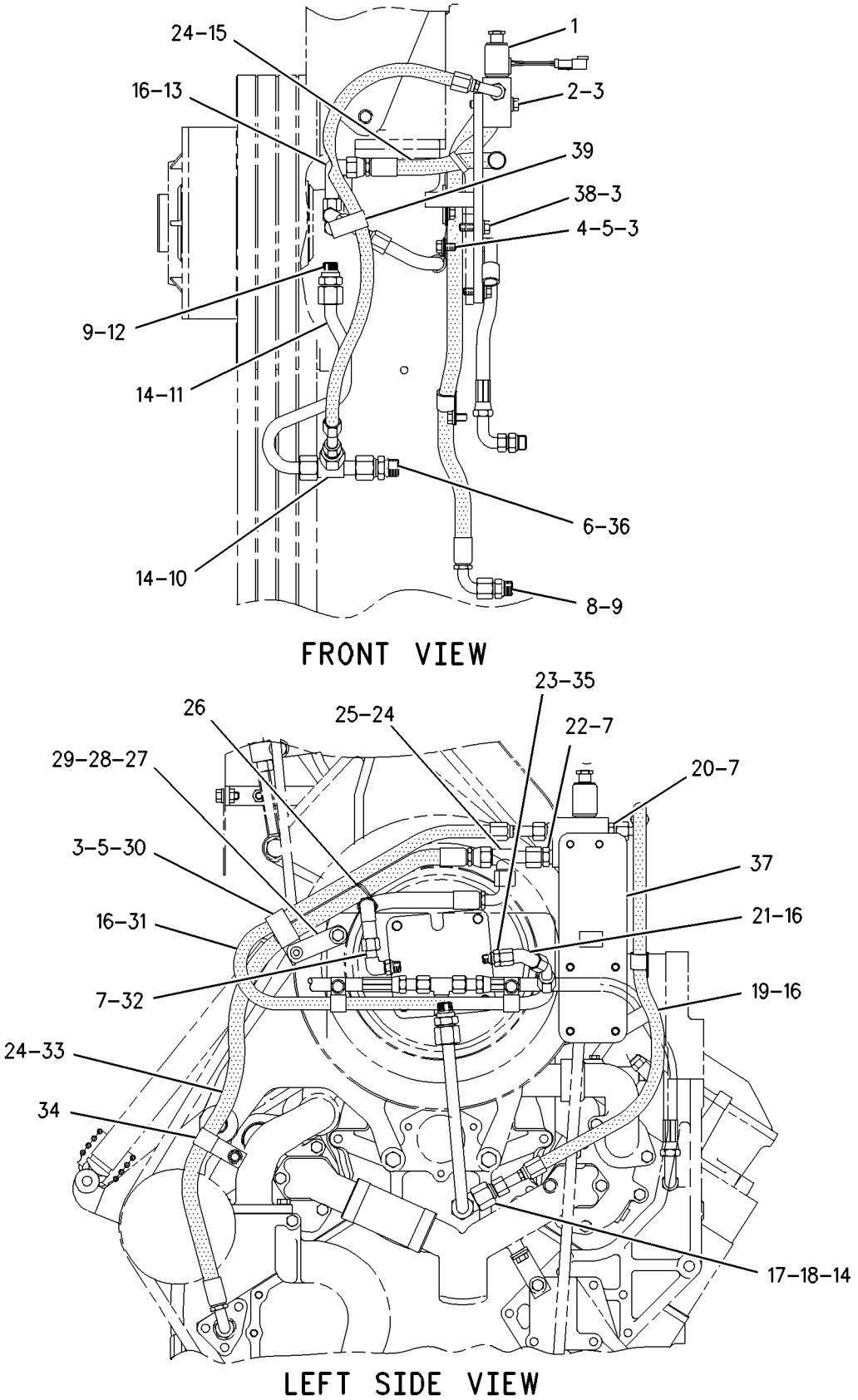

GRAPHIC #1 g00705646

LUBRICATION SYSTEM

180-7467 LINES GP-OIL SUPPLY

S/N: 3KR1-UP

PART OF 203-7802 FAN AR, 180-6632 SUPPRESSION AR-SOUND AN ATTACHMENT

SMCS-1307 **i01741492**

NOTE	REF NO	GRAPHIC REF	PART NUMBER	QTY	PART NAME 1 2 3 4 5 6 (PRODUCT LEVEL)	SEE PAGE
	1	1	**6V-0852**	1	CAP-DUST	
	2	1	**6V-3965**	1	FITTING AS	
	3	1	**7W-2131**	1	BRACKET AS	
		1	**1F-0750**	1	NUT-WELD (3/8-16 THD)	
	4	1	**7X-0871**	1	TEE	
	5	1	**8E-3430**	1	STRIP AS	
	6	1	**8T-0130**	1	ELBOW	
	7	1	**8V-0442**	1	ANGLE	
I	8	1	**123-5898**	1	HOSE AS	
	9	1	**153-3699**	1	BRACKET AS	
I	10	1	**180-7883**	1	HOSE AS	
I	11	1	**180-7884**	1	HOSE AS	
I	12	1	**216-4541**	1	HOSE AS	
I	13	1	**180-7886**	1	HOSE AS	
	14	1	**180-7887**	1	TUBE AS	
I	15	1	**180-7891**	1	HOSE AS	
	16	1	**180-7912**	1	BRACKET AS	
		1	**1F-0750**	1	NUT-WELD (3/8-16 THD)	
	17	1	**180-7913**	1	BRACKET AS	
		1	**1F-0750**	1	NUT-WELD (3/8-16 THD)	
	18	1	**189-3094**	1	TUBE AS	
Y	19	1	*192-0729*	1	VALVE & MTG GP-PILOT	651
	20	1	**192-2843**	1	BRACKET AS	
		1	**1F-0750**	1	NUT-WELD (3/8-16 THD)	
	21	1	**033-6033**	6	SEAL-O-RING	
	22	1	**0S-1591**	1	BOLT (3/8-16X1.5 IN)	
	23	1	**0S-1594**	1	BOLT (3/8-16X1 IN)	
	24	1	**1P-3708**	1	SEAL-RECTANGULAR	
	25	1	**1S-0994**	2	CLIP	
	26	1	**4D-7735**	1	CLIP	
	27	1	**4L-6454**	5	BOLT (3/8-16X1 IN)	
	28	1	**5M-3062**	4	BOLT (3/8-16X0.75 IN)	
	29	1	**5P-1075**	3	WASHER-HARD (10.2X22.5X3MM THK)	
	30	1	**5P-9757**	5	SEAL-O-RING	
	31	1	**6V-5048**	1	SEAL-O-RING	
	32	1	**6V-5049**	6	SEAL-O-RING	
	33	1	**6V-5050**	1	SEAL-O-RING	
	34	1	**6V-5185**	3	CLIP (SLOT)	
	35	1	**6V-5186**	3	CLIP (TAB)	
	36	1	**6V-8556**	1	NUT (1 3/16-12 THD)	
	37	1	**6V-8632**	1	CONNECTOR	
	38	1	**6V-8633**	1	CONNECTOR	
	39	1	**6V-8636**	2	CONNECTOR	
	40	1	**6V-8739**	1	UNION-FACE SEAL	
	41	1	**6V-8791**	1	TEE-FACE SEAL	
	42	1	**6V-8801**	4	NUT (3/8-16 THD)	
	43	1	**6V-8942**	1	REDUCER-O-RING (FACE)	
	44	1	**6V-9837**	1	TEE-SWIVEL	
	45	1	**6V-9872**	1	CONNECTOR	
	46	1	**6V-9873**	1	CONNECTOR-SEAL	
	47	1	**8C-6874**	1	CONNECTOR	
	48	1	**8C-8988**	1	ELBOW	
	49	1	**8L-2746**	2	SEAL-O-RING	
	50	1	**8L-2779**	5	SEAL-O-RING	
	51	1	**8L-2786**	1	SEAL-O-RING	

180-7467 LINES GP-OIL SUPPLY *(contd.)*

i01741492

NOTE	REF NO	GRAPHIC REF	PART NUMBER	QTY	PART NAME 1 2 3 4 5 6 (PRODUCT LEVEL)	SEE PAGE
	52	1	**8M-2773**	3	CLIP	
	53	1	**8S-0948**	1	CLIP	
	54	1	**8T-0788**	1	ELBOW	
	55	1	**8T-2502**	1	BOLT (3/8-16X1.125 IN)	
	56	1	**8T-4896**	20	WASHER-HARD (10.2X18.5X2.5MM THK)	
	57	1	**8T-9377**	2	BOLT (3/8-16X2.25 IN)	
	58	1	**9B-7237**	9	BOLT (3/8-16X1.25 IN)	
I	59	1	**216-4541**	1	HOSE AS	

I-SEE HOSE FABRICATION GUIDE
Y-SEPARATE ILLUSTRATION

180-7467 **LINES GP-OIL SUPPLY** *(contd.)* **i01741492**

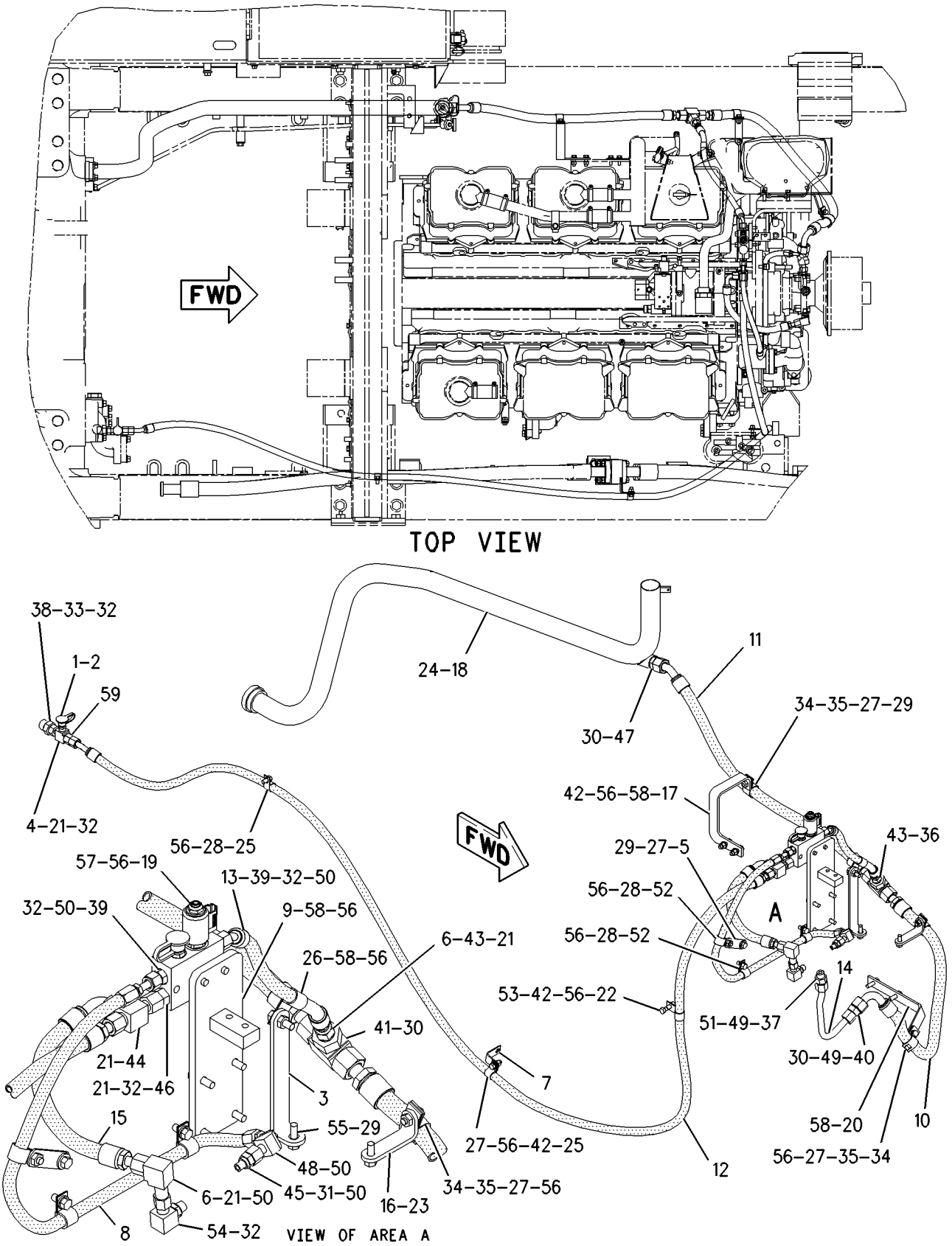

GRAPHIC #1 g00892704

MEMORANDA

LUBRICATION SYSTEM

128-4332 LINES GP-TURBOCHARGER OIL

S/N: 80M1-UP
PART OF 115-7641, 135-7810, 155-0058 ENGINE AR
ALSO AN ATTACHMENT

SMCS-1052, 1307 **i01740254**

NOTE	REF NO	GRAPHIC REF	PART NUMBER	QTY	PART NAME 1 2 3 4 5 6 (PRODUCT LEVEL)	SEE PAGE
	1	1	**1A-2029**	4	BOLT (3/8-16X1.125 IN)	
	2	1	**6V-4589**	1	SEAL-O-RING	
	3	1	**6V-9003**	1	ELBOW	
	4	1	**8L-2746**	2	SEAL-O-RING	
	5	1	**128-6612**	1	TUBE AS-OIL SUPPLY	
	6	1	**123-8180**	1	TUBE AS-OIL SUPPLY	
	7	1	**0S-1608**	2	BOLT (3/8-16X3.75 IN)	
	8	1	**0L-1351**	2	BOLT (3/8-16X0.875 IN)	
	9	1	**5P-5598**	1	SEAL-O-RING	
	10	1	**4P-0692**	2	CLAMP AS	
					(EACH INCLUDES)	
		1	**108-1434**	1	GROMMET	
	11	1	**7N-7559**	1	GASKET	
	12	1	**0L-2070**	1	BOLT (3/8-16X2.25 IN)	
	13	1	**9X-6458**	1	WASHER-HARD (10.2X22.5X3MM THK)	
	14	1	**1W-5378**	1	ELBOW-DRAIN	
	15	1	**108-9432**	1	TUBE	
	16	1	**5P-9890**	2	SEAL-O-RING	
	17	1	**5M-2894**	2	WASHER-HARD (10.2X18.5X2.5MM THK)	
	18	1	**4W-2109**	2	RETAINER	
	19	1	**4W-1890**	1	FLANGE-DRAIN	
	20	1	**4N-6672**	1	GASKET	
	21	1	**4W-2110**	1	RING-RETAINING	

128-4332 **LINES GP-TURBOCHARGER OIL** *(contd.)* **i01740254**

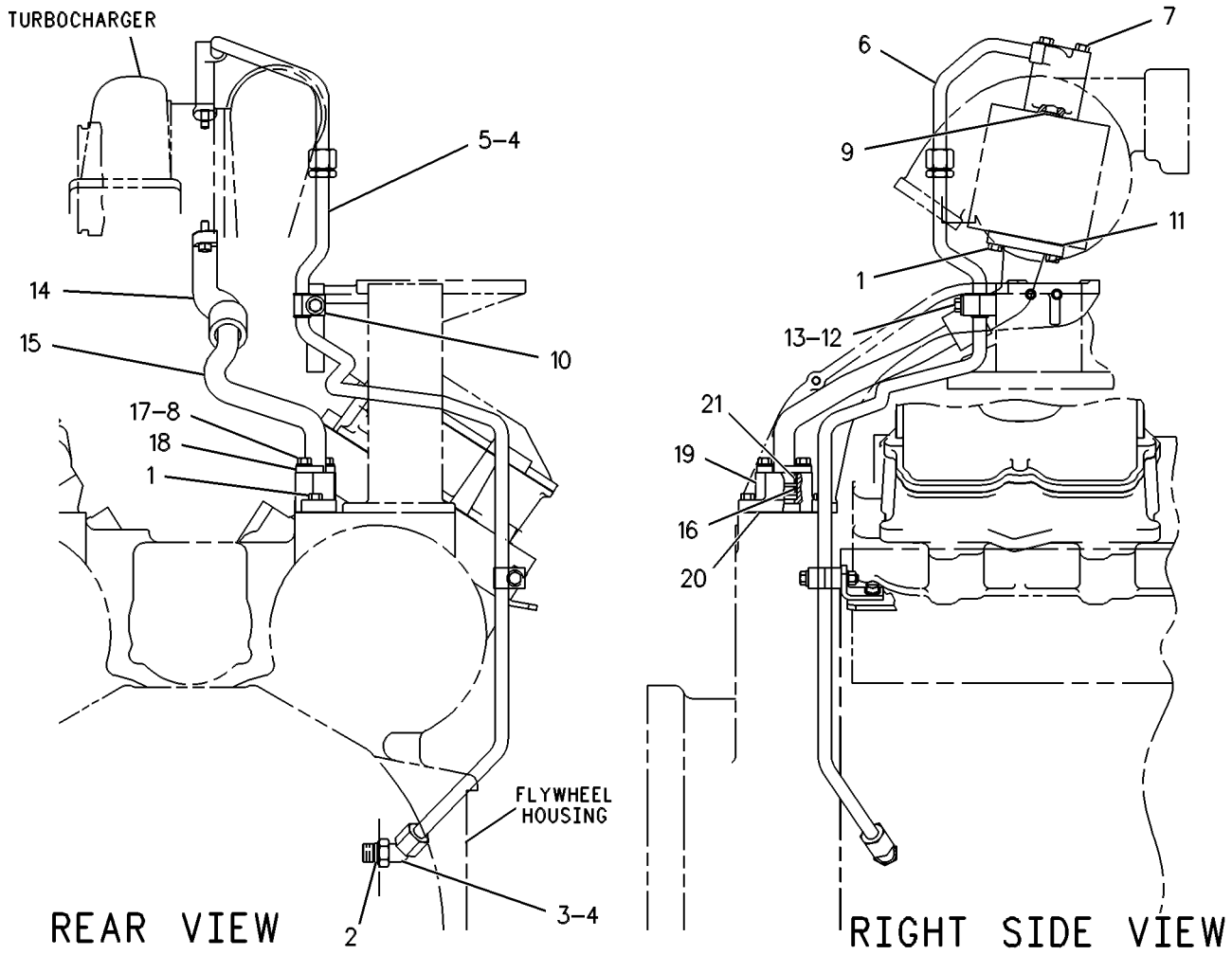

GRAPHIC #1 g00253372

LUBRICATION SYSTEM

131-1722 OIL CHANGE GP-HIGH SPEED

S/N: 3KR1-UP

AN ATTACHMENT

SMCS-1325 **i01749305**

NOTE	REF NO	GRAPHIC REF	PART NUMBER	QTY	PART NAME 1 2 3 4 5 6 (PRODUCT LEVEL)	SEE PAGE
	1	1	**6V-9005**	1	ELBOW	
	2	1	**4L-6454**	1	BOLT (3/8-16X1 IN)	
	3	1	**5P-1075**	1	WASHER-HARD (10.2X22.5X3MM THK)	
	4	1	**110-8319**	1	RECEIVER AS (TRANSMISSION OIL)	
		1	**110-8318**	1	CAP	
	5	1	**2P-1286**	1	LOCKNUT-BULKHEAD (1-5/16-12 THD)	
	6	1	**110-8827**	1	RECEIVER AS (ENGINE OIL)	
		1	**110-8826**	1	CAP	
	7	1	**2V-2043**	1	LOCKNUT-FLARED (1-5/8-12 THD)	
	8	1	**6V-8635**	2	CONNECTOR	
	9	1	**6N-2656**	1	TUBE AS-OIL CHANGE	
	10	1	**7M-8485**	3	SEAL-O-RING	
	11	1	**5K-9090**	4	SEAL-O-RING	
	12	1	**6V-8714**	1	CONNECTOR	
	13	1	**9U-9557**	1	BRACKET	
I	14	1	**110-5980**	1	HOSE AS	
	15	1	**4S-4455**	1	CLIP	
	16	1	**1S-0004**	1	SEAL-O-RING	
	17	1	**3D-2824**	1	SEAL-O-RING	
	18	1	**8T-4835**	1	BOLT (1/2-13X2 IN)	
	19	1	**8T-4223**	1	WASHER-HARD (13.5X25.5X3MM THK)	
I	20	1	**131-1721**	1	HOSE AS	
	21	1	**7W-5157**	1	BRACKET AS	
		1	**1F-0750**	1	NUT-WELD (3/8-16 THD)	
AF		1	**126-7538**	1	NOZZLE AS (TRANSMISSION OIL)	
AF		1	**126-7539**	1	NOZZLE AS (ENGINE OIL)	

A-NOT PART OF THIS GROUP
F-NOT SHOWN
I-SEE HOSE FABRICATION GUIDE

131-1722 **OIL CHANGE GP-HIGH SPEED** *(contd.)* **i01749305**

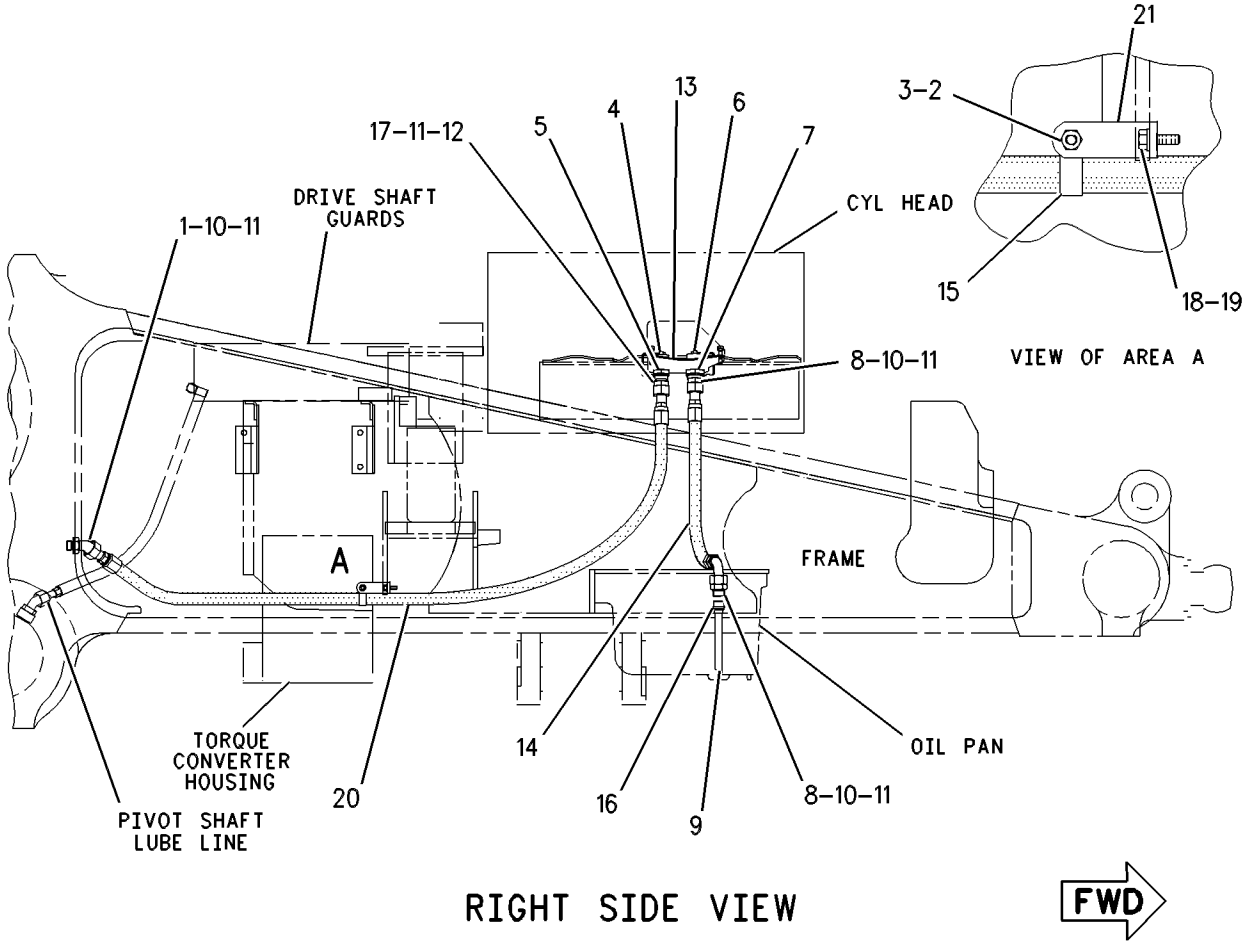

GRAPHIC #1 g00497148

LUBRICATION SYSTEM

116-6769 PRELUBRICATION AR-ENGINE

S/N: 3KR1-UP
AN ATTACHMENT
TYPE 1

SMCS-1319 **i01749306**

NOTE	REF NO	GRAPHIC REF	PART NUMBER	QTY	PART NAME 1 2 3 4 5 6 (PRODUCT LEVEL)	SEE PAGE
	1	1	**5S-7349**	2	BOLT (1/4-20X0.5 IN)	
	2	1	**125-6539**	1	SWITCH AS (PRELUBE TIMER)	
	3	1	**138-9370**	1	PLATE AS	
	4	1	**8T-4896**	2	WASHER-HARD (10.2X18.5X2.5MM THK)	
	5	1	**6H-4746**	1	ADAPTER	
	6	1	**105-9152**	1	SWITCH AS-PRESSURE (OIL)	
		1	**102-8802**	1	KIT-RECEPTACLE (2 PIN)	
					(INCLUDES WEDGE & RECEPTACLE AS)	
	7	1	**5M-3062**	2	BOLT (3/8-16X0.75 IN)	
	8	1	**8T-4205**	2	WASHER-HARD (7.2X14.5X2MM THK)	
YR	9	1	**123-8686**	1	STARTING MOTOR GP-ELECTRIC	494
	10	1	**130-1814**	1	HARNESS AS (PRELUBE STARTER)	
		1	**102-8802**	1	KIT-RECEPTACLE (2 PIN)	
					(INCLUDES RECEPTACLE AS AND WEDGE)	
		1	**155-2270**	1	KIT-CONNECTING PLUG (2 PIN)	
					(INCLUDES PLUG AS AND WEDGE)	
I	11	1	**130-1812**	1	HOSE AS	
	12	1	**7J-9108**	2	SEAL-O-RING	
	13	1	**6V-8632**	1	CONNECTOR	
	14	1	**3K-0360**	1	SEAL-O-RING	
I	15	1	**130-1813**	1	HOSE AS	
	16	1	**5K-9090**	3	SEAL-O-RING	
	17	1	**6V-8635**	1	CONNECTOR	
	18	1	**125-0473**	1	FILM-NOTICE (PRELUBRICATION PUMP)	
	19	1	**8T-9386**	1	CONNECTOR	
	20	1	**7M-8485**	1	SEAL-O-RING	
	21	1	**6V-9840**	1	TEE-SWIVEL	
	22	1	**6V-9833**	1	CAP AS	
	23	1	**6N-5650**	1	TUBE AS-OIL CHANGE	
	24	1	**1S-0004**	1	SEAL-O-RING	
	25	1	**2M-9780**	3	SEAL-O-RING	
	26	1	**123-5150**	1	VALVE-CHECK	
B	27	1	**7K-1181**	6	STRAP-CABLE	
FY		1	**130-0956**	1	SENSOR GP-ARC SUPPRESSOR	444

B-USE AS REQUIRED
F-NOT SHOWN
I-SEE HOSE FABRICATION GUIDE
R-REMFG PART MAY BE AVAILABLE
Y-SEPARATE ILLUSTRATION

116-6769 **PRELUBRICATION AR-ENGINE** *(contd.)* **i01749306**

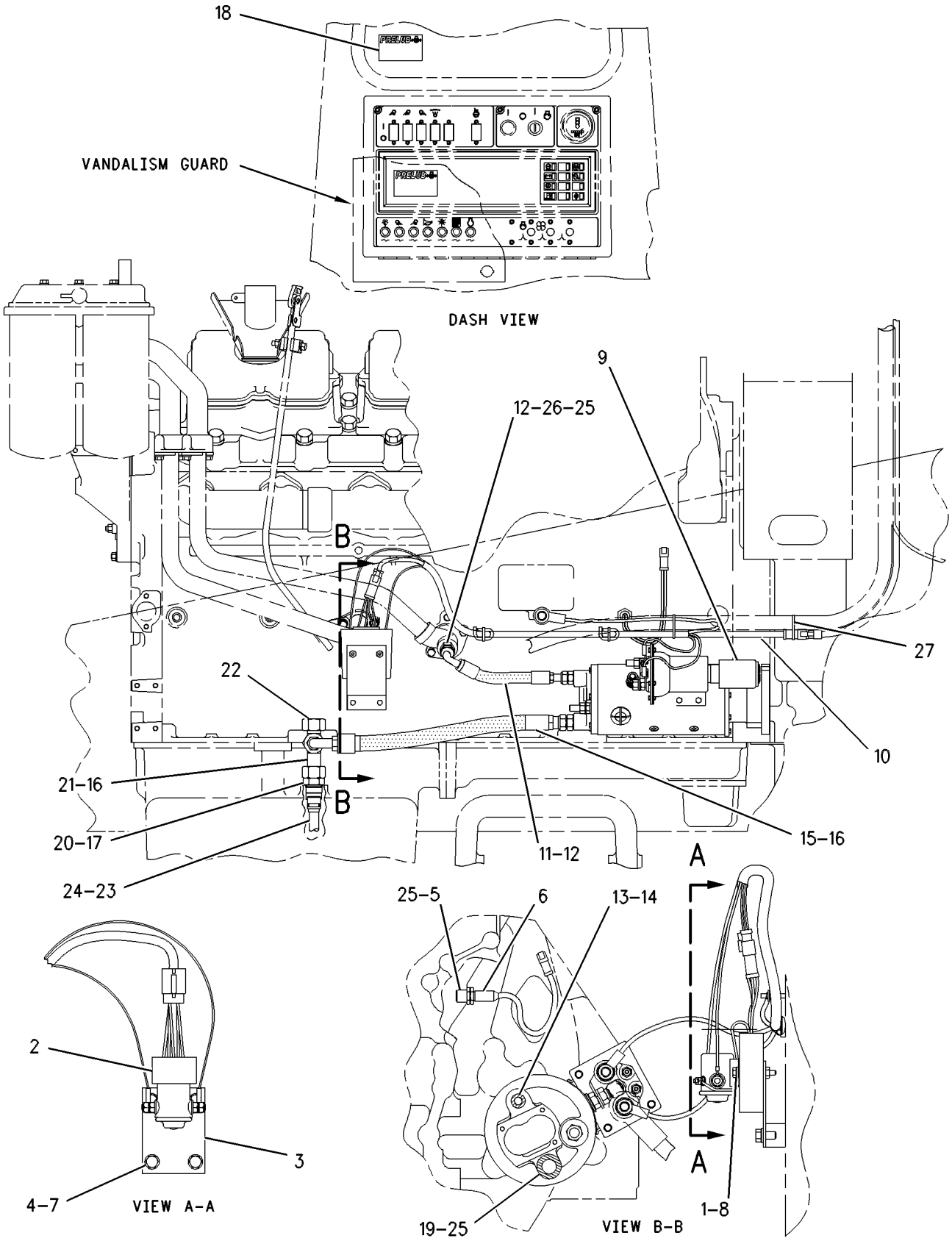

GRAPHIC #1 g00284540

LUBRICATION SYSTEM

116-6769 PRELUBRICATION AR-ENGINE

S/N: 3KR1-UP
AN ATTACHMENT
TYPE 2

SMCS-1319 **i01749307**

NOTE	REF NO	GRAPHIC REF	PART NUMBER	QTY	PART NAME 1 2 3 4 5 6 (PRODUCT LEVEL)	SEE PAGE
	1	1	**8T-9367**	2	BOLT (1/4-20X2 IN)	
CY	2	1	*139-1585*	1	SWITCH GP-TIMER (PRELUBE)	504
		1	**140-3108**	1	TIMER	
	3	1	**138-9370**	1	PLATE AS	
	4	1	**8T-4896**	2	WASHER-HARD (10.2X18.5X2.5MM THK)	
	5	1	**6H-4746**	1	ADAPTER	
	6	1	**105-9152**	1	SWITCH AS-PRESSURE (OIL)	
		1	**102-8802**	1	KIT-RECEPTACLE (2 PIN)	
					(INCLUDES RECEPTACLE AS & WEDGE)	
	7	1	**5M-3062**	2	BOLT (3/8-16X0.75 IN)	
	8	1	**5P-4115**	2	WASHER-HARD (7.2X19X2MM THK)	
YR	9	1	**123-8686**	1	STARTING MOTOR GP-ELECTRIC	494
	10	1	**130-1814**	1	HARNESS AS (PRELUBE STARTER)	
		1	**102-8802**	1	KIT-RECEPTACLE (2 PIN)	
					(INCLUDES RECEPTACLE AS AND WEDGE)	
		1	**155-2270**	1	KIT-CONNECTING PLUG (2 PIN)	
					(INCLUDES PLUG AS AND WEDGE)	
I	11	1	**130-1812**	1	HOSE AS	
	12	1	**7J-9108**	2	SEAL-O-RING	
	13	1	**6V-8632**	1	CONNECTOR	
	14	1	**3K-0360**	1	SEAL-O-RING	
I	15	1	**130-1813**	1	HOSE AS	
	16	1	**5K-9090**	3	SEAL-O-RING	
	17	1	**6V-8635**	1	CONNECTOR	
	18	1	**125-0473**	1	FILM-NOTICE (PRELUBRICATION PUMP)	
	19	1	**8T-9386**	1	CONNECTOR	
	20	1	**7M-8485**	1	SEAL-O-RING	
	21	1	**6V-9840**	1	TEE-SWIVEL	
	22	1	**6V-9833**	1	CAP AS	
	23	1	**6N-2656**	1	TUBE AS-OIL CHANGE	
	24	1	**1S-0004**	1	SEAL-O-RING	
	25	1	**2M-9780**	3	SEAL-O-RING	
	26	1	**123-5150**	1	VALVE-CHECK	
B	27	1	**7K-1181**	6	STRAP-CABLE	

B-USE AS REQUIRED
C-CHANGE FROM PREVIOUS TYPE
I-SEE HOSE FABRICATION GUIDE
R-REMFG PART MAY BE AVAILABLE
Y-SEPARATE ILLUSTRATION

116-6769 **PRELUBRICATION AR-ENGINE** *(contd.)* **i01749307**

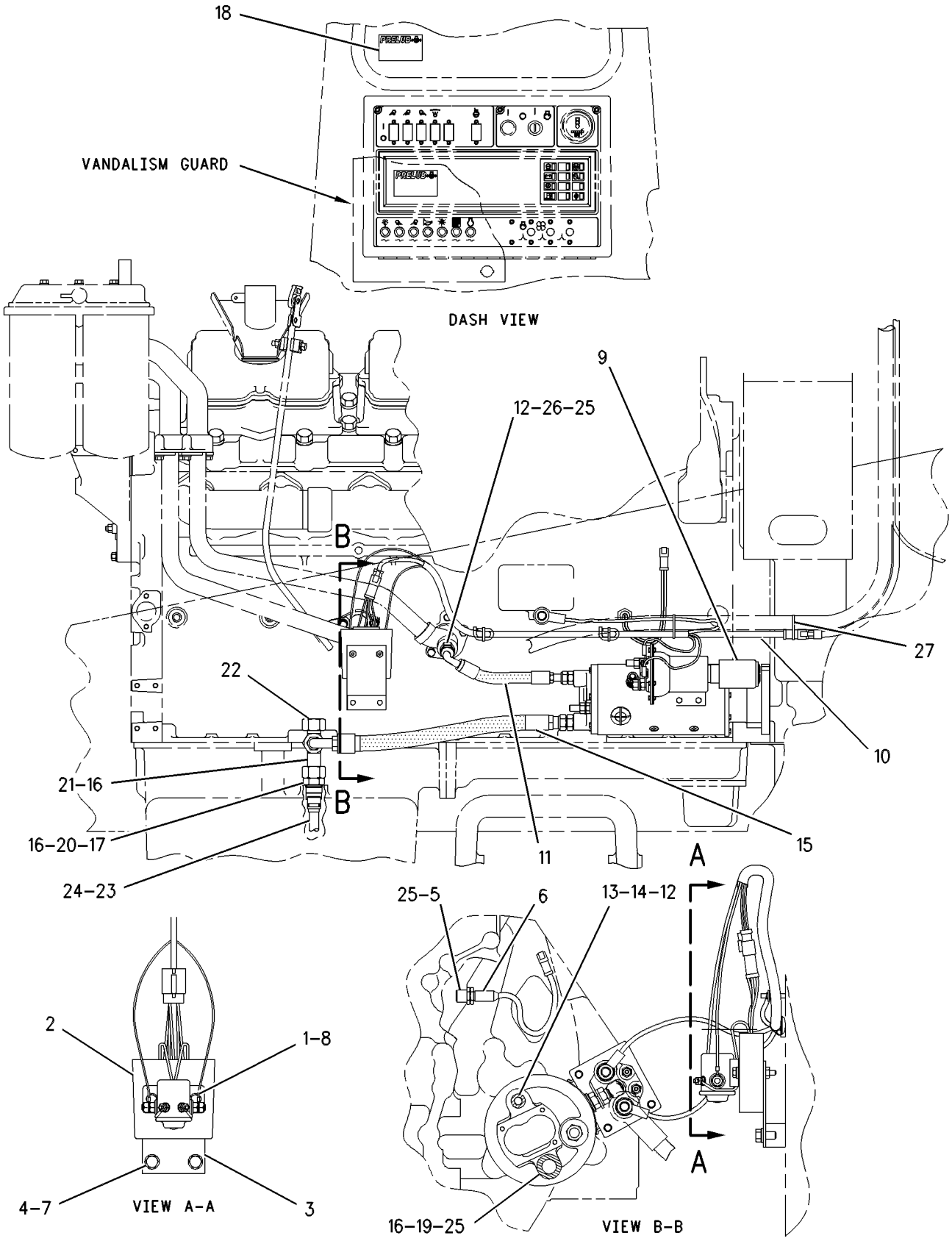

GRAPHIC #1 g00548015

LUBRICATION SYSTEM

116-6769 PRELUBRICATION AR-ENGINE

S/N: 3KR1-UP
AN ATTACHMENT
TYPE 3

SMCS-1319 **i01749308**

NOTE	REF NO	GRAPHIC REF	PART NUMBER	QTY	PART NAME 1 2 3 4 5 6 (PRODUCT LEVEL)	SEE PAGE
	1	1	**8T-9367**	2	BOLT (1/4-20X2 IN)	
C	2	1	**179-0006**	1	SWITCH AS-MAGNETIC (PRELUBE)	
		1	**1B-2578**	2	NUT (3/8-16 THD)	
		1	**4D-1326**	2	LOCKWASHER	
		1	**4L-6499**	2	WASHER (0.38X0.88X0.02 IN THK)	
		1	**6V-8378**	2	NUT (10-32 THD)	
		1	**7X-0620**	2	WASHER-HARD (5.5X13X1.6MM THK)	
		1	**8F-1434**	2	LOCKWASHER	
C	3	1	**177-4308**	1	PLATE AS	
	4	1	**8T-4896**	2	WASHER-HARD (10.2X18.5X2.5MM THK)	
	5	1	**6H-4746**	1	ADAPTER	
	6	1	**105-9152**	1	SWITCH AS-PRESSURE (OIL)	
		1	**102-8802**	1	KIT-RECEPTACLE (2 PIN)	
					(INCLUDES RECEPTACLE AS & WEDGE)	
	7	1	**5M-3062**	2	BOLT (3/8-16X0.75 IN)	
	8	1	**5P-4115**	2	WASHER-HARD (7.2X19X2MM THK)	
YR	9	1	**123-8686**	1	STARTING MOTOR GP-ELECTRIC	494
	10	1	**130-1814**	1	HARNESS AS (PRELUBE STARTER)	
		1	**102-8802**	1	KIT-RECEPTACLE (2 PIN)	
					(INCLUDES RECEPTACLE AS AND WEDGE)	
		1	**155-2270**	1	KIT-CONNECTING PLUG (2 PIN)	
					(INCLUDES PLUG AS AND WEDGE)	
I	11	1	**130-1812**	1	HOSE AS	
	12	1	**7J-9108**	1	SEAL-O-RING	
	13	1	**153-6230**	1	CONNECTOR GP	
	14	1	**148-8429**	1	FITTING GP	
I	15	1	**130-1813**	1	HOSE AS	
C	16	1	**140-3108**	3	TIMER	
	17	1	**148-8335**	1	CONNECTOR GP	
	18	1	**125-0473**	1	FILM-NOTICE (PRELUBRICATION PUMP)	
C	19	1	**8T-4205**	4	WASHER-HARD (7.2X14.5X2MM THK)	
C	20	1	**4M-5281**	4	BOLT (1/4-20X.750 IN)	
	21	1	**148-8342**	1	CONNECTOR GP	
	22	1	**6V-9833**	1	CAP AS	
	23	1	**6N-2656**	1	TUBE AS-OIL CHANGE	
	24	1	**1S-0004**	1	SEAL-O-RING	
	25	1	**2M-9780**	2	SEAL-O-RING	
	26	1	**123-5150**	1	VALVE-CHECK	
	27	1	**7K-1181**	6	STRAP-CABLE	

C-CHANGE FROM PREVIOUS TYPE
I-SEE HOSE FABRICATION GUIDE
R-REMFG PART MAY BE AVAILABLE
Y-SEPARATE ILLUSTRATION

116-6769 **PRELUBRICATION AR-ENGINE** *(contd.)* **i01749308**

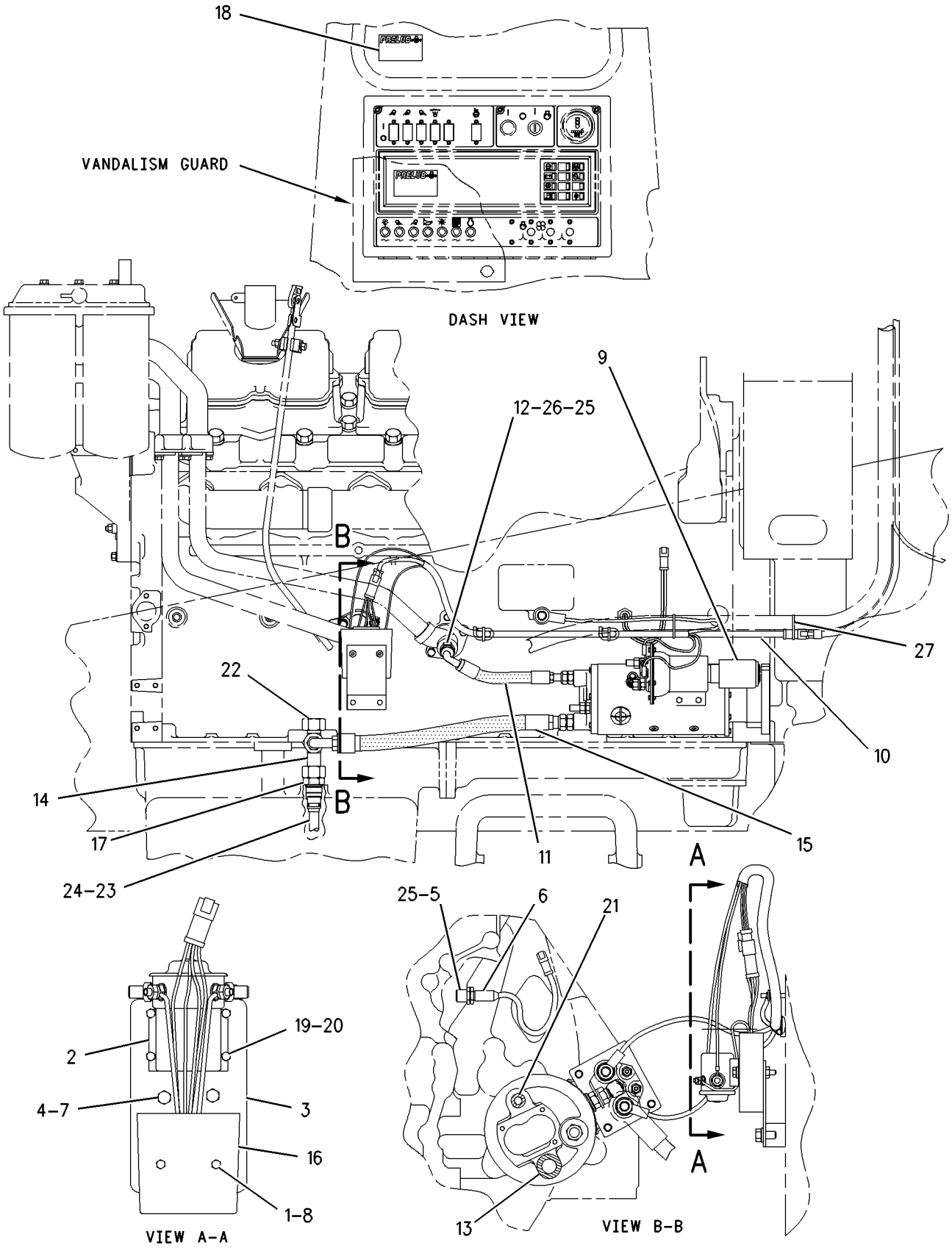

GRAPHIC #1 g00727829

LUBRICATION SYSTEM

7C-1772 PUMP GP-ENGINE OIL*R

S/N: 80M1-UP
PART OF 115-7641, 135-7810, 155-0058 ENGINE AR
ALSO AN ATTACHMENT

SMCS-1304, 1315 **i01511784**

NOTE	REF NO	GRAPHIC REF	PART NUMBER	QTY	PART NAME 1 2 3 4 5 6 (PRODUCT LEVEL)	SEE PAGE
	1	1	**6N-1029**	1	BODY AS-OIL PUMP	
		1	**7N-2156**	2	BEARING-SLEEVE	
	2	1	**8M-8489**	2	DOWEL	
	3	1	**145-8503**	1	SHAFT AS-IDLER	
	4	1	**4N-5339**	1	SPACER AS-OIL PUMP	
		1	**7N-2155**	2	BEARING-SLEEVE	
	5	1	**7W-6528**	1	GEAR-PUMP (8 TEETH)	
	6	1	**6N-2343**	1	BODY AS-PUMP	
		1	**7N-2213**	2	BEARING-SLEEVE	
	7	1	**5F-4899**	4	BOLT (3/8-16X5.5 IN)	
	8	1	**5B-4274**	2	BOLT (3/8-16X3.5 IN)	
	9	1	**5M-2894**	2	WASHER-HARD (10.2X18.5X2.5MM THK)	
	10	1	**9Y-1800**	1	RETAINER	
	11	1	**7C-1527**	1	SPACER	
	12	1	**2S-2760**	1	SPRING	
	13	1	**202-3572**	1	SHAFT AS-DRIVE	
	14	1	**7C-1512**	1	PLUNGER-RELIEF	
	15	1	**7W-7141**	1	GEAR-PUMP (8 TEETH)	
	16	1	**7G-2176**	4	DAMPER-BOLT	
	17	1	**7C-1511**	1	RING-PLUNGER	

7C-1772 **PUMP GP-ENGINE OIL** *(contd.)* **i01511784**

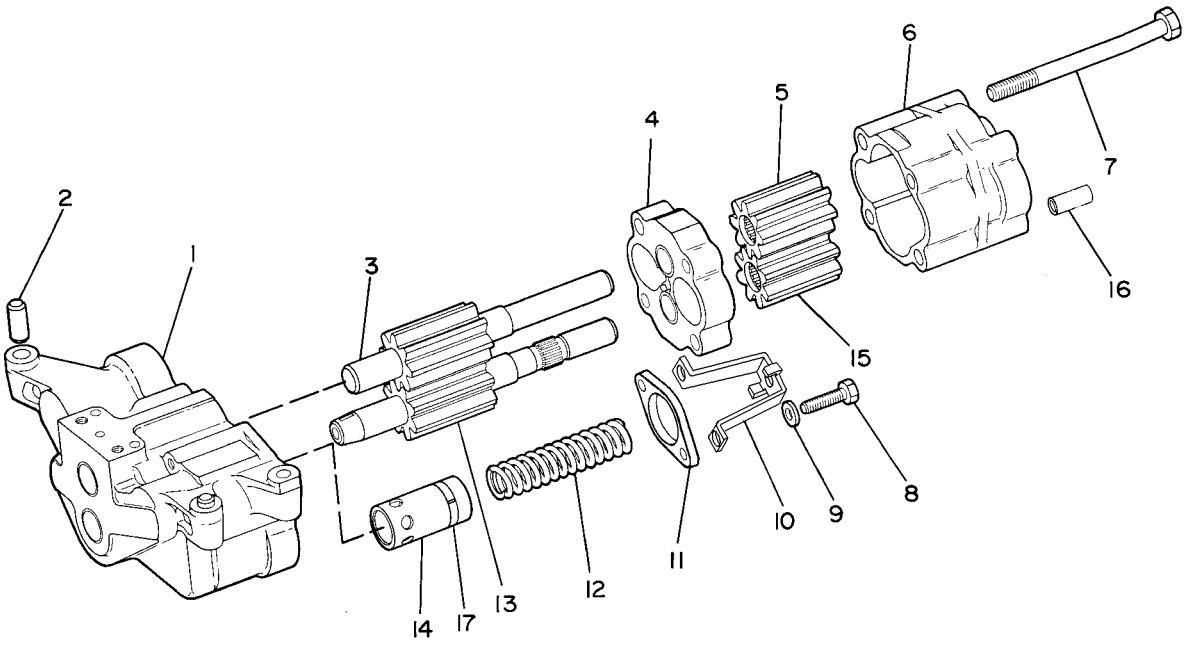

GRAPHIC #1 g00082258

LUBRICATION SYSTEM

124-2725 VALVE & MTG GP-FAN DRIVE

S/N: 3KR1-1410
PART OF 116-4948 LINES GP-OIL SUPPLY
ALSO AN ATTACHMENT

SMCS-5479 **i01543601**

NOTE	REF NO	GRAPHIC REF	PART NUMBER	QTY	PART NAME 1 2 3 4 5 6 (PRODUCT LEVEL)	SEE PAGE
Y	1	1	**124-3497**	1	VALVE GP-SOLENOID (VARIABLE SPEED FAN DRIVE)	1052
	2	1	**9S-4191**	3	PLUG-STRAIGHT THREAD	
	3	1	**6V-5049**	3	SEAL-O-RING	

Y-SEPARATE ILLUSTRATION

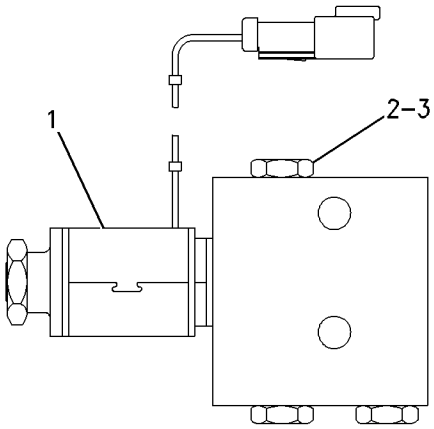

GRAPHIC #1 g00734154

COOLING SYSTEM

132-5312 COOLANT CONDITIONER GP

S/N: 3KR1-703

SMCS-1352 **i01400483**

NOTE	REF NO	GRAPHIC REF	PART NUMBER	QTY	PART NAME 1 2 3 4 5 6 (PRODUCT LEVEL)	SEE PAGE
	1	1	**8L-3282**	2	CONNECTOR-FLARED	
	2	1	**9Y-1022**	1	ELEMENT AS-COOLANT CONDITIONER	
	3	1	**8T-6767**	2	PLUG-PIPE	
	4	1	**9N-3668**	1	BASE AS	
		1	**9N-3645**	1	STUD-TAPERLOCK	
	5	1	**4L-6454**	2	BOLT (3/8-16X1 IN)	
	6	1	**9N-3666**	2	VALVE AS	
	7	1	**030-7962**	2	ELBOW (FLARED SWIVEL 45 DEGREE)	
	8	1	**6L-9781**	2	CONNECTOR-FLARED	
I	9	1	**132-4484**	1	HOSE AS	
I	10	1	**032-1013**	1	HOSE AS	
	11	1	**9X-6772**	2	STRAP-CABLE	
	12	1	**5K-6875**	1	ADAPTER	

I-SEE HOSE FABRICATION GUIDE

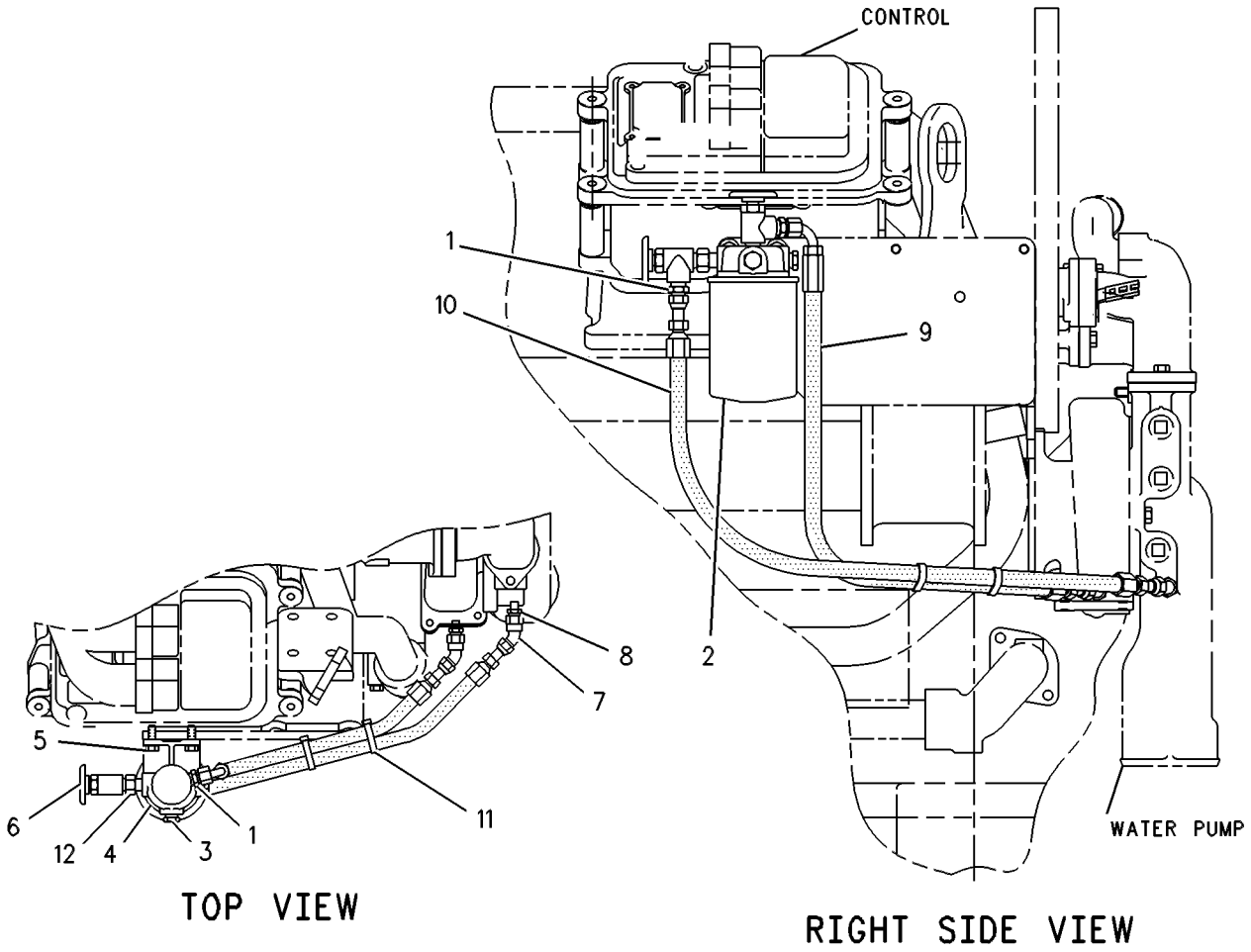

GRAPHIC #1 g00257476

COOLING SYSTEM

138-1224 COOLANT CONDITIONER GP

S/N: 3KR704-UP

SMCS-1352 **i01740274**

NOTE	REF NO	GRAPHIC REF	PART NUMBER	QTY	PART NAME 1 2 3 4 5 6 (PRODUCT LEVEL)	SEE PAGE
	1	1	**8L-3282**	2	CONNECTOR-FLARED	
	2	1	**7U-6358**	1	SHIM (3.0MM THK)	
	3	1	**8T-6767**	2	PLUG-PIPE	
	4	1	**9N-3668**	1	BASE AS	
		1	**9N-3645**	1	STUD-TAPERLOCK	
	5	1	**4L-6454**	2	BOLT (3/8-16X1 IN)	
	6	1	**9N-3666**	2	VALVE AS	
	7	1	**030-7962**	2	ELBOW	
	8	1	**6L-9781**	2	CONNECTOR-FLARED	
I	9	1	**132-4484**	1	HOSE AS	
I	10	1	**032-1013**	1	HOSE AS	
	11	1	**9X-6772**	2	STRAP-CABLE	
	12	1	**5K-6875**	1	ADAPTER	
	13	1	**6V-9168**	1	NUT (11/16-16 THD)	
	14	1	**8T-4994**	1	WASHER-HARD (20X36.5X3.5MM THK)	

I-SEE HOSE FABRICATION GUIDE

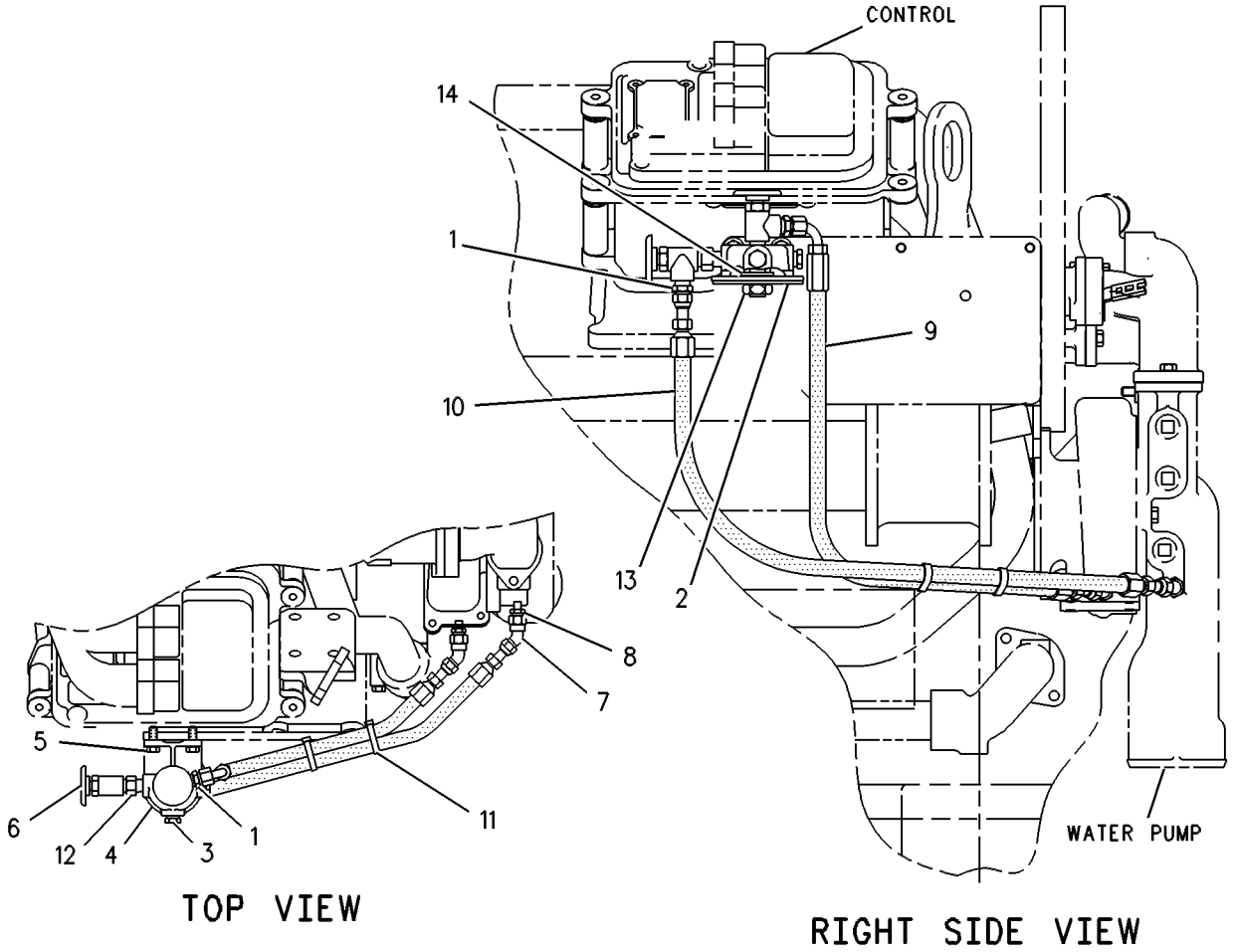

GRAPHIC #1 g00279917

COOLING SYSTEM

4N-2388 COOLER GP-ENGINE OIL

S/N: 80M1-841

PART OF 115-7641 ENGINE AR

SMCS-1378 **i01708542**

NOTE	REF NO	GRAPHIC REF	PART NUMBER	QTY	PART NAME 1 2 3 4 5 6 (PRODUCT LEVEL)	SEE PAGE
CR	1	1	**7C-0145**	1	CORE AS-OIL COOLER (ENGINE)	
	2	1	**109-0077**	2	SEAL-O-RING	

C-CHANGE FROM PREVIOUS TYPE
R-REMFG PART MAY BE AVAILABLE

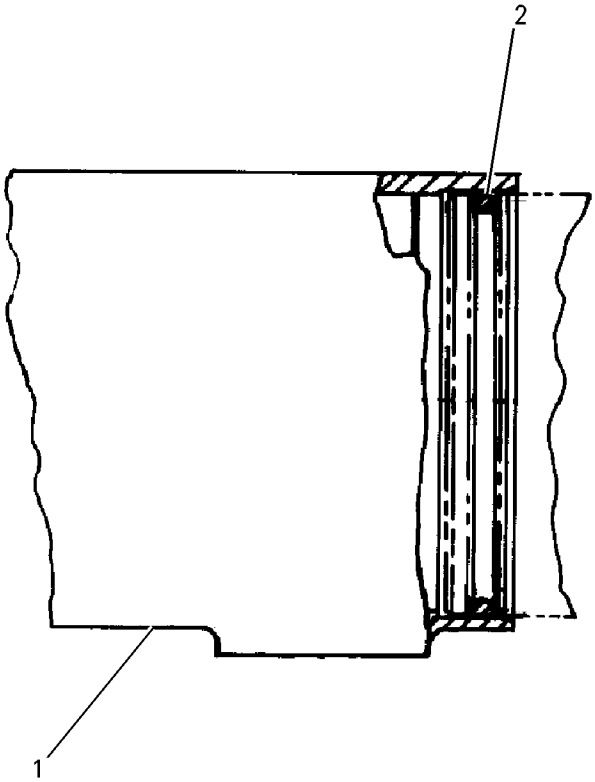

GRAPHIC #1 g00718741

COOLING SYSTEM

7C-6461 CORE GP-OIL COOLER*R

S/N: 80M1-481

PART OF 7C-6460 COOLER GP-TRANSMISSION OIL

SMCS-1374, 1375, 1378 **i00735081**

NOTE	REF NO	GRAPHIC REF	PART NUMBER	QTY	PART NAME 1 2 3 4 5 6 (PRODUCT LEVEL)	SEE PAGE
					(INDIVIDUAL PARTS ARE NOT SERVICED SEPARATELY)	

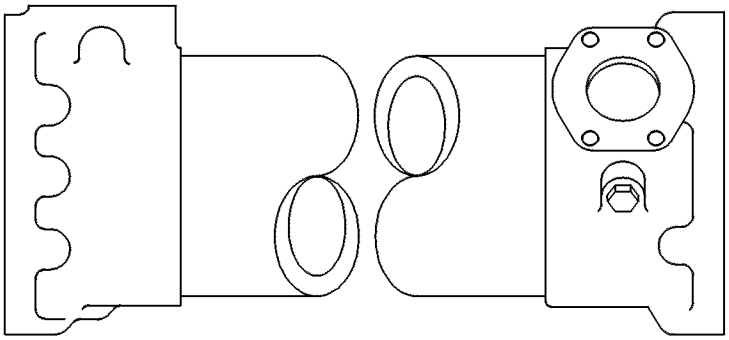

GRAPHIC #1 g00240941

COOLING SYSTEM

203-7802 FAN AR—VARIABLE SPEED

S/N: 3KR1-UP
DEMAND FAN
AN ATTACHMENT

SMCS-1356 **i01506515**

NOTE	PART NUMBER	QTY	PART NAME 1 2 3 4 5 6 (PRODUCT LEVEL)	SEE PAGE
Y	*192-6156*	1	DRIVE GP-FAN	75
Y	*116-4900*	1	FAN GP-BLOWER	150
Y	*180-7467*	1	LINES GP-OIL SUPPLY	126
Y	*116-5255*	1	PULLEY GP-CRANKSHAFT	103
Y-SEPARATE ILLUSTRATION				

<END>

COOLING SYSTEM

136-6427 FAN AR-VARIABLE

S/N: 3KR1-UP
ELECTRONICALLY REVERSIBLE
AN ATTACHMENT
TYPE 1

SMCS-1356 **i01332840**

NOTE	REF NO	GRAPHIC REF	PART NUMBER	QTY	PART NAME 1 2 3 4 5 6 (PRODUCT LEVEL)	SEE PAGE
	1	1	**113-0520**	1	COVER	
	2	1	**113-0521**	1	PLATE AS	
	3	1	**9F-6445**	3	NUT-WELD (1/4-20 THD)	
FY		1	*128-1571*	1	FAN GP-VARIABLE PITCH	152

F-NOT SHOWN
Y-SEPARATE ILLUSTRATION

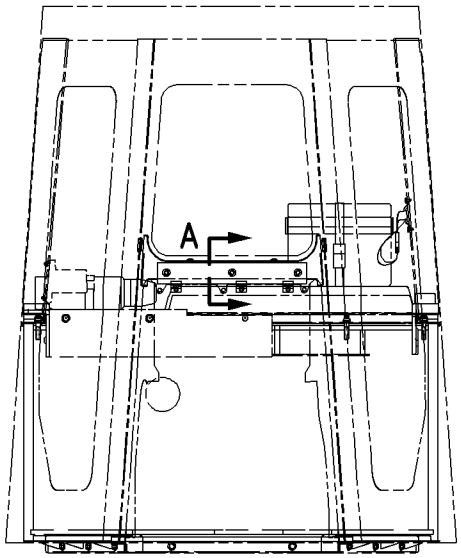

FRONT VIEW

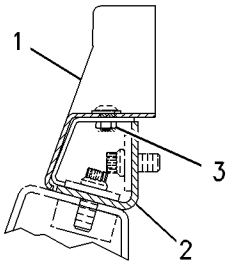

SECTION A

GRAPHIC #1 g00669908

COOLING SYSTEM

136-6427 FAN AR-VARIABLE

S/N: 3KR1-UP
ELECTRONICALLY REVERSIBLE
AN ATTACHMENT
TYPE 2

SMCS-1356 **i01740281**

NOTE	PART NUMBER	QTY	PART NAME 1 2 3 4 5 6 (PRODUCT LEVEL)	SEE PAGE
Y	*128-1571*	1	FAN GP-VARIABLE PITCH	152
	113-0520	1	COVER	
	9S-1315	1	PIN-CLEVIS	
	7W-1659	1	ARM AS-TIGHTENER	
	6S-6308	1	PIN	
	113-0521	1	PLATE AS	
	9F-6445	3	NUT-WELD (1/4-20 THD)	
Y-SEPARATE ILLUSTRATION				

<END>

COOLING SYSTEM

116-4900 FAN GP-BLOWER

S/N: 3KR1-1410

PART OF 203-7802 FAN AR, 180-6632 SUPPRESSION AR-SOUND

ALSO AN ATTACHMENT

SMCS-1356, 1360 **i01740309**

NOTE	REF NO	GRAPHIC REF	PART NUMBER	QTY	PART NAME 1 2 3 4 5 6 (PRODUCT LEVEL)	SEE PAGE
	1	1	**119-0763**	1	GUARD AS-FAN	
		1	**1F-0750**	2	NUT-WELD (3/8-16 THD)	
	2	1	**119-0765**	1	GUARD AS-FAN	
	3	1	**119-0764**	1	GUARD AS-FAN	
	4	1	**9B-7237**	18	BOLT (3/8-16X1.25 IN)	
	5	1	**5P-1075**	23	WASHER-HARD (10.2X22.5X3MM THK)	
	6	1	**6V-8801**	5	NUT (3/8-16 THD)	
	7	1	**119-4287**	1	SUPPORT	
	8	1	**4L-6454**	2	BOLT (3/8-16X1 IN)	
	9	1	**8T-4896**	2	WASHER-HARD (10.2X18.5X2.5MM THK)	
	10	1	**118-6840**	1	SPIDER AS-FAN	
	11	1	**119-4288**	2	BRACKET	
	12	1	**5P-2566**	6	BOLT (1/2-13X1.5 IN)	
	13	1	**8T-4223**	6	WASHER-HARD (13.5X25.5X3MM THK)	

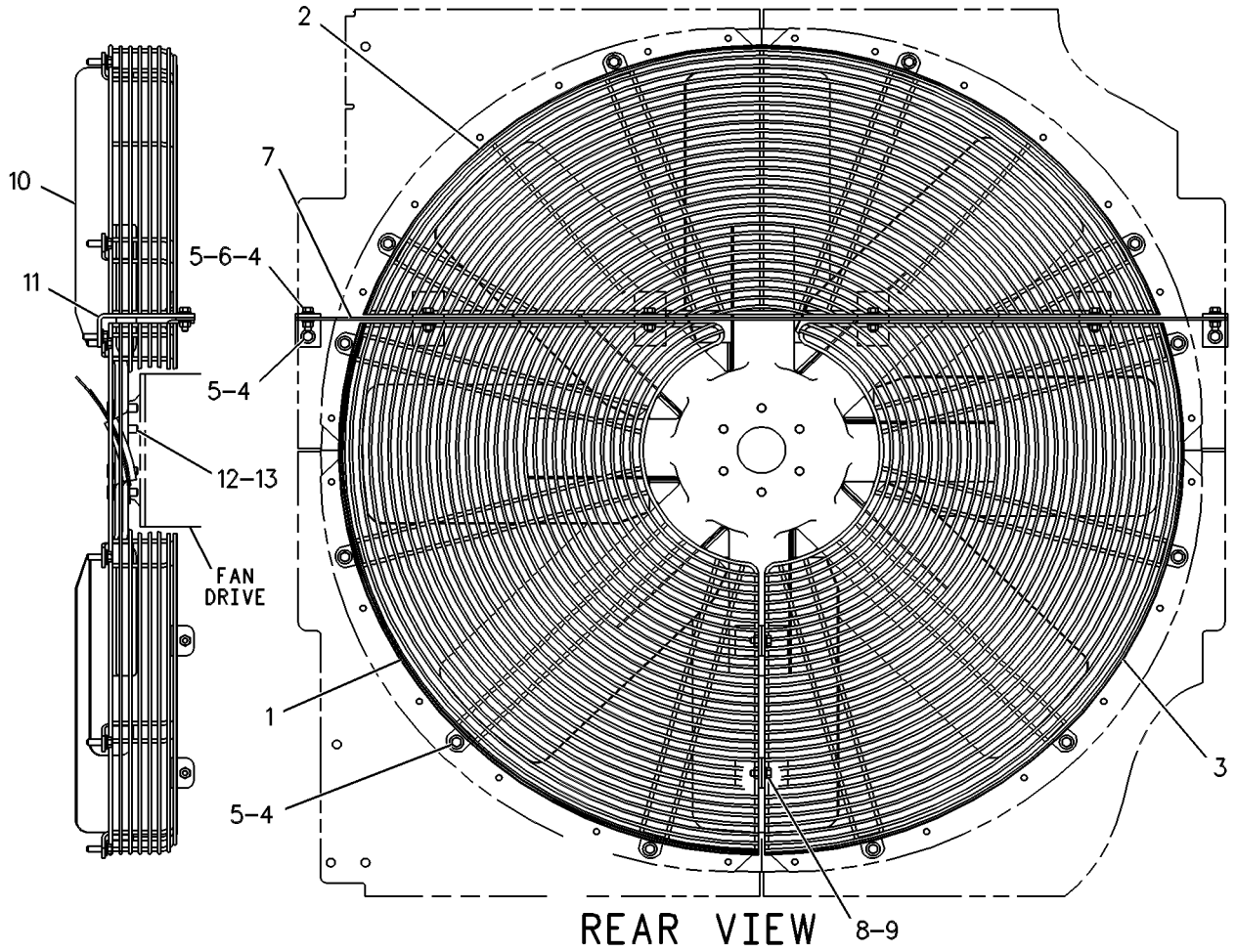

GRAPHIC #1 g00253404

COOLING SYSTEM

185-4335 FAN GP-BLOWER

S/N: 3KR1411-UP

FOR USE WITH DIRECT DRIVE FAN OPTION

SMCS-1356, 1360 **i01740311**

NOTE	REF NO	GRAPHIC REF	PART NUMBER	QTY	PART NAME 1 2 3 4 5 6 (PRODUCT LEVEL)	SEE PAGE
	1	1	**119-0763**	1	GUARD AS-FAN	
		1	**1F-0750**	2	NUT-WELD (3/8-16 THD)	
	2	1	**119-0765**	1	GUARD AS-FAN	
	3	1	**119-0764**	1	GUARD AS-FAN	
	4	1	**9B-7237**	18	BOLT (3/8-16X1.25 IN)	
	5	1	**5P-1075**	23	WASHER-HARD (10.2X22.5X3MM THK)	
	6	1	**6V-8801**	5	NUT (3/8-16 THD)	
	7	1	**119-4287**	1	SUPPORT	
	8	1	**4L-6454**	2	BOLT (3/8-16X1 IN)	
	9	1	**8T-4896**	2	WASHER-HARD (10.2X18.5X2.5MM THK)	
	10	1	**177-9388**	1	SPIDER AS-FAN	
	11	1	**119-4288**	2	BRACKET	
	12	1	**8T-8919**	6	BOLT (1/2-13X1.75 IN)	
	13	1	**8T-4223**	6	WASHER-HARD (13.5X25.5X3MM THK)	

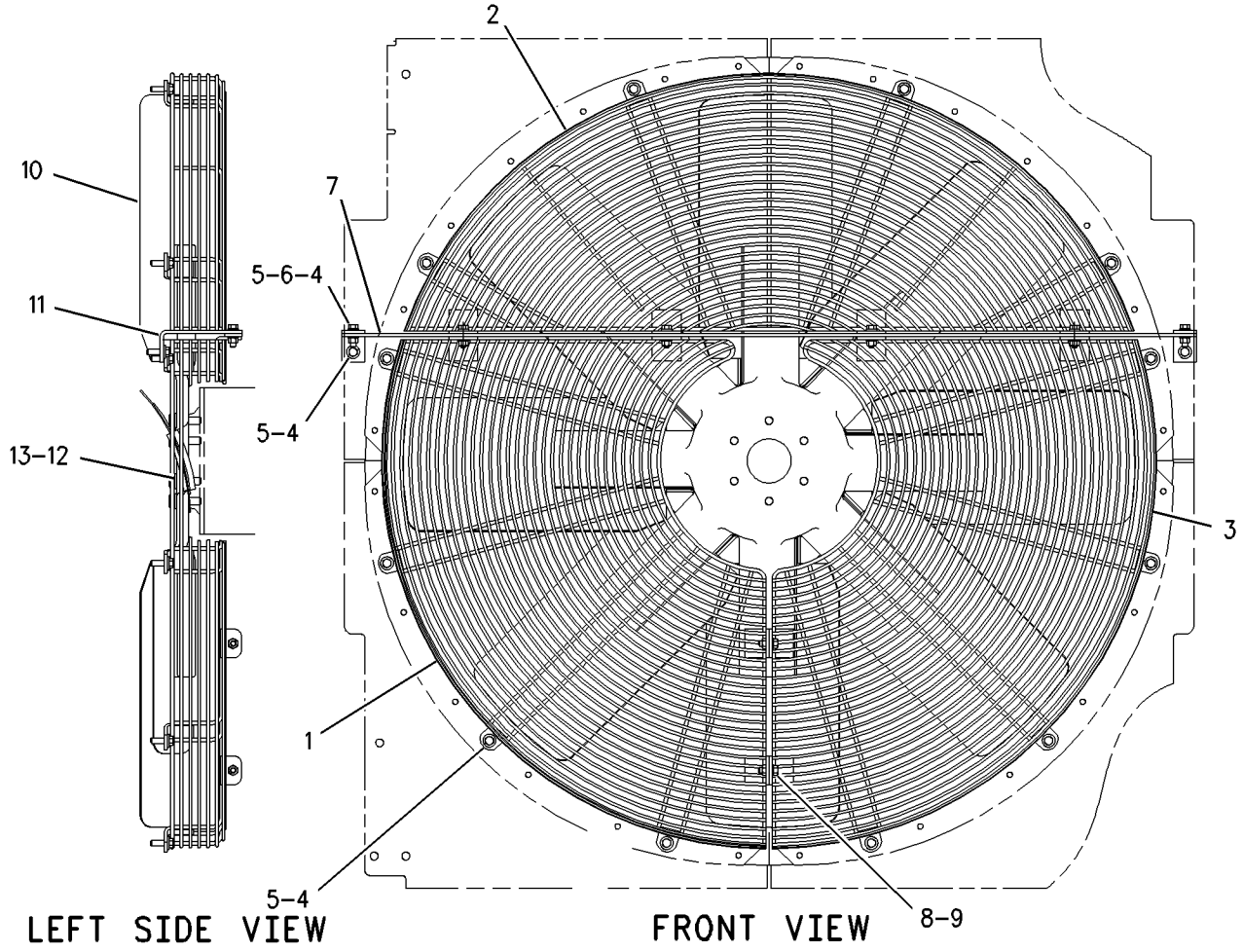

GRAPHIC #1 g00682659

COOLING SYSTEM

128-1571 FAN GP-VARIABLE PITCH

S/N: 3KR1-UP
ELECTRONICALLY REVERSIBLE
PART OF 136-6427 FAN AR-VARIABLE
AN ATTACHMENT
TYPE 1

SMCS-1356 **i01740314**

NOTE	REF NO	GRAPHIC REF	PART NUMBER	QTY	PART NAME 1 2 3 4 5 6 (PRODUCT LEVEL)	SEE PAGE
	1	1	**5P-4115**	1	WASHER-HARD (7.2X19X2MM THK)	
	2	1	**114-4698**	32	BOLT (3/8-16X1 IN)	
	3	1	**2Q-3371**	1	SENSOR-TEMPERATURE	
	4	1	**7K-1181**	20	STRAP-CABLE	
	5	1	**1Q-3613**	2	PLATE-WARNING	
	6	1	**8T-9530**	8	TACK-FASTENER	
	7	1	**9V-2818**	2	GROMMET	
	8	1	**108-1537**	1	WIRE AS	
	9	1	**9X-8486**	2	SCREW-MACHINE (8-32X0.75 IN)	
	10	1	**6T-3643**	1	CIRCUIT BREAKER AS (15 AMP)	
		1	**6V-8376**	2	SCREW-MACHINE (8-32X0.25 IN)	
		1	**9B-7233**	2	LOCKWASHER	
	11	1	**8T-4223**	4	WASHER-HARD (13.5X25.5X3MM THK)	
	12	1	**8T-4835**	2	BOLT (1/2-13X2 IN)	
	13	1	**4V-6981**	2	SCREW-BUTTON HEAD (1/4-20X0.75 IN)	
	14	1	**135-5424**	1	HUB AS	
		1	**126-2741**	1	ACTUATOR	
	15	1	**165-6052**	8	KIT-FAN BLADE	
	16	1	**9S-4191**	1	PLUG	
	17	1	**4P-7581**	2	CLIP	
	18	1	**126-1599**	2	WIRE AS	
	19	1	**126-2869**	1	CLAMP	
	20	1	**126-6232**	1	WIRE AS	
	21	1	**118-6330**	2	STUD	
	22	1	**6V-8188**	2	NUT (1/2-13 THD)	
	23	1	**9S-4185**	1	PLUG	
	24	1	**136-6428**	1	PULLEY	
	25	1	**3K-0360**	1	SEAL-O-RING	
	26	1	**3J-1907**	1	SEAL-O-RING	
	27	1	**127-1472**	1	COVER AS	
	28	1	**133-9944**	1	PLATE AS	
		1	**4K-9097**	4	NUT-WELD (5/16-18 THD)	
		1	**8P-6099**	4	SPACER (6.83X10.29X18MM THK)	
M	29	1	**7X-2533**	4	BOLT (M6X1X35MM)	
	30	1	**127-1622**	1	BOX-CONTROL	
		1	**8M-8948**	1	FUSE (15 AMP)	
		1	**137-2082**	1	FUSE (1/4 AMP)	
	31	1	**8T-9364**	5	BOLT (1/4-20X0.625 IN)	
	32	1	**3D-9348**	4	BOLT (1/2-13X7.75IN)	
	33	1	**102-8803**	1	KIT-RECEPTACLE (3 PIN)	
					(INCLUDES RECEPTACLE AS & WEDGE)	
	34	1	**3E-3371**	1	WEDGE-RECEPTACLE LOCK (3 PIN)	
	35	1	**8T-8737**	5	PLUG-SEAL	
	36	1	**102-8802**	1	KIT-RECEPTACLE (2 PIN)	
					(INCLUDES RECEPTACLE AS & WEDGE)	
	37	1	**3E-3365**	1	WEDGE-RECEPTACLE LOCK (2 PIN)	
	38	1	**126-1600**	1	WIRE AS	
	39	1	**126-1602**	1	WIRE AS	
	40	1	**126-5144**	1	MONITOR-DISPLAY	
	41	1	**135-8654**	1	V-BELT	

M-METRIC PART

128-1571 **FAN GP-VARIABLE PITCH** *(contd.)* **i01740314**

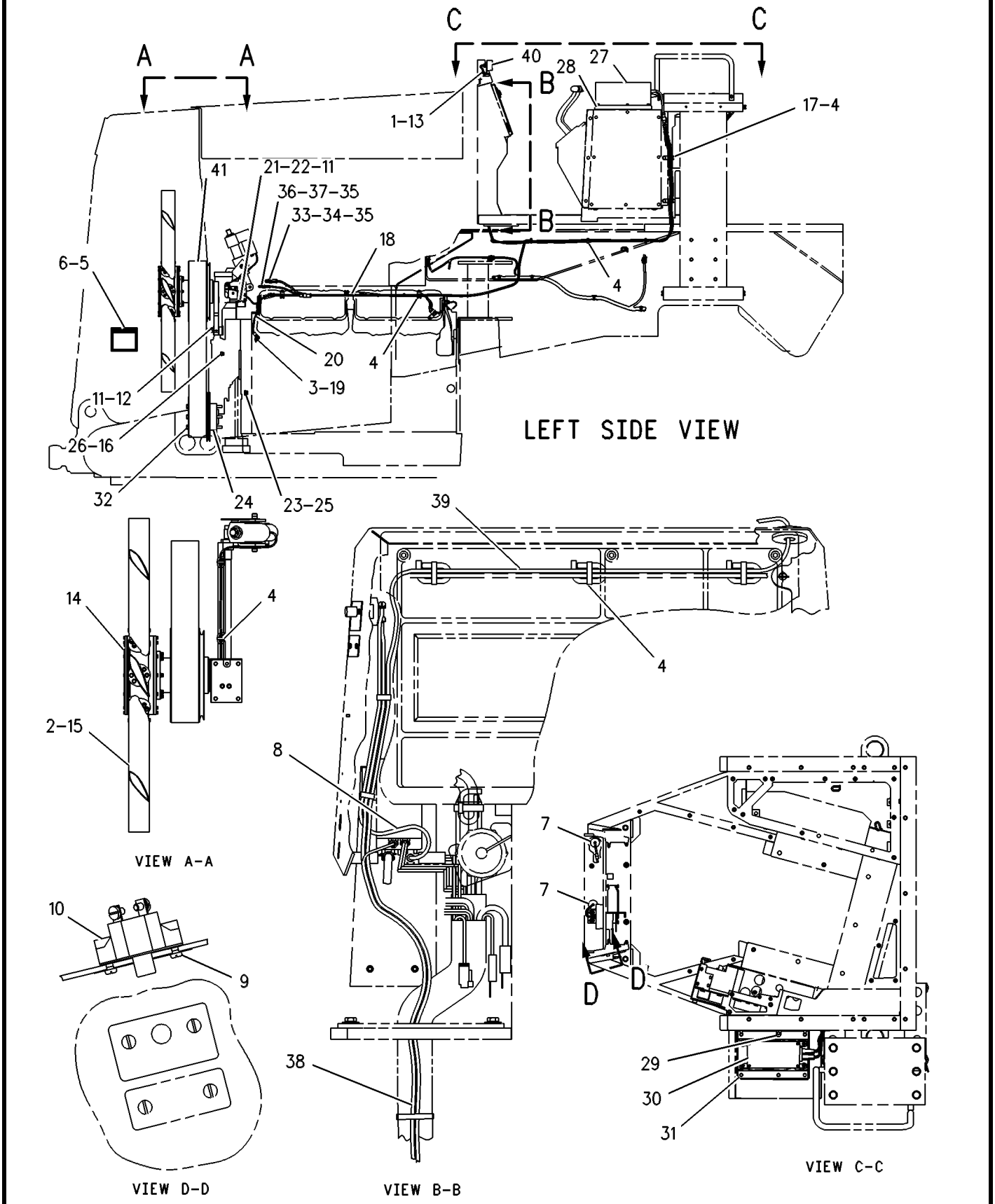

GRAPHIC #1 g00341842

COOLING SYSTEM

128-1571 FAN GP-VARIABLE PITCH

S/N: 3KR1-UP
ELECTRONICALLY REVERSIBLE
PART OF 136-6427 FAN AR-VARIABLE
AN ATTACHMENT
TYPE 2

SMCS-1356 **i01740317**

NOTE	REF NO	GRAPHIC REF	PART NUMBER	QTY	PART NAME 1 2 3 4 5 6 (PRODUCT LEVEL)	SEE PAGE
C	1	1	**9X-2038**	2	WASHER (7X19X2MM THK)	
	2	1	**114-4698**	32	BOLT (3/8-16X1 IN)	
	3	1	**2Q-3371**	1	SENSOR-TEMPERATURE (COOLANT)	
	4	1	**7K-1181**	20	STRAP-CABLE	
	5	1	**1Q-3613**	2	PLATE-WARNING	
	6	1	**8T-9530**	8	TACK-FASTENER	
	7	1	**9V-2818**	2	GROMMET	
C	8	1	**146-4370**	1	WIRE AS	
C	9	1	**143-8656**	2	FILM-IDENTIFICATION (FUSE)	
	10	1	**8T-4223**	4	WASHER-HARD (13.5X25.5X3MM THK)	
	11	1	**8T-4835**	2	BOLT (1/2-13X2 IN)	
	12	1	**4V-6981**	2	SCREW-BUTTON HEAD (1/4-20X0.75 IN)	
	13	1	**135-5424**	1	HUB AS	
	14	1	**136-6426**	8	BLADE	
C	15	1	**8T-4205**	9	WASHER-HARD (7.2X14.5X2MM THK)	
	16	1	**4P-7581**	2	CLIP	
	17	1	**126-1599**	2	WIRE AS	
	18	1	**126-2869**	1	CLAMP	
	19	1	**126-6232**	1	WIRE AS	
	20	1	**118-6330**	2	STUD	
	21	1	**6V-8188**	2	NUT (1/2-13 THD)	
	22	1	**136-6428**	1	PULLEY	
	23	1	**127-1472**	1	COVER AS	
	24	1	**133-9944**	1	PLATE AS	
		1	**4K-9097**	4	NUT-WELD (5/16-18 THD)	
		1	**8P-6099**	4	SPACER (6.83X10.29X18MM THK)	
M	25	1	**7X-2533**	4	BOLT (M6X1X35MM)	
	26	1	**127-1622**	1	BOX-CONTROL	
		1	**8M-8948**	1	FUSE (15 AMP)	
		1	**137-2082**	1	FUSE (1/4 AMP)	
	27	1	**8T-9364**	5	BOLT (1/4-20X0.625 IN)	
	28	1	**3D-9348**	4	BOLT (1/2-13X7.75IN)	
	29	1	**102-8803**	1	KIT-RECEPTACLE (3 PIN)	
					(INCLUDES RECEPTACLE AS & PART MARKED L)	
L	30	1	**3E-3371**	1	WEDGE-RECEPTACLE LOCK (3 PIN)	
	31	1	**8T-8737**	5	PLUG-SEAL	
	32	1	**102-8802**	1	KIT-RECEPTACLE (2 PIN)	
					(INCLUDES RECEPTACLE AS & PART MARKED J)	
J	33	1	**3E-3365**	1	WEDGE-RECEPTACLE LOCK (2 PIN)	
	34	1	**126-1602**	1	WIRE AS	
	35	1	**126-5144**	1	MONITOR-DISPLAY	
	36	1	**135-8654**	1	V-BELT	
C	37	1	**9B-7237**	4	BOLT (3/8-16X1.25 IN)	
C	38	1	**8T-4896**	4	WASHER-HARD (10.2X18.5X2.5MM THK)	
C	39	1	**153-3699**	1	BRACKET AS	
N	40	1	**7T-6135**	4	SPACER	
N	41	1	**8T-4223**	4	WASHER-HARD (13.5X25.5X3MM THK)	
N	42	1	**8T-8920**	4	BOLT (1/2-13X3.25 IN)	

C-CHANGE FROM PREVIOUS TYPE
J-INCLUDED IN 102-8802 RECEPTACLE KIT
L-INCLUDED IN 102-8803 RECEPTACLE KIT
M-METRIC PART
N-USE ONLY WITH AIR CONDITIONG

128-1571 **FAN GP-VARIABLE PITCH** *(contd.)* **i01740317**

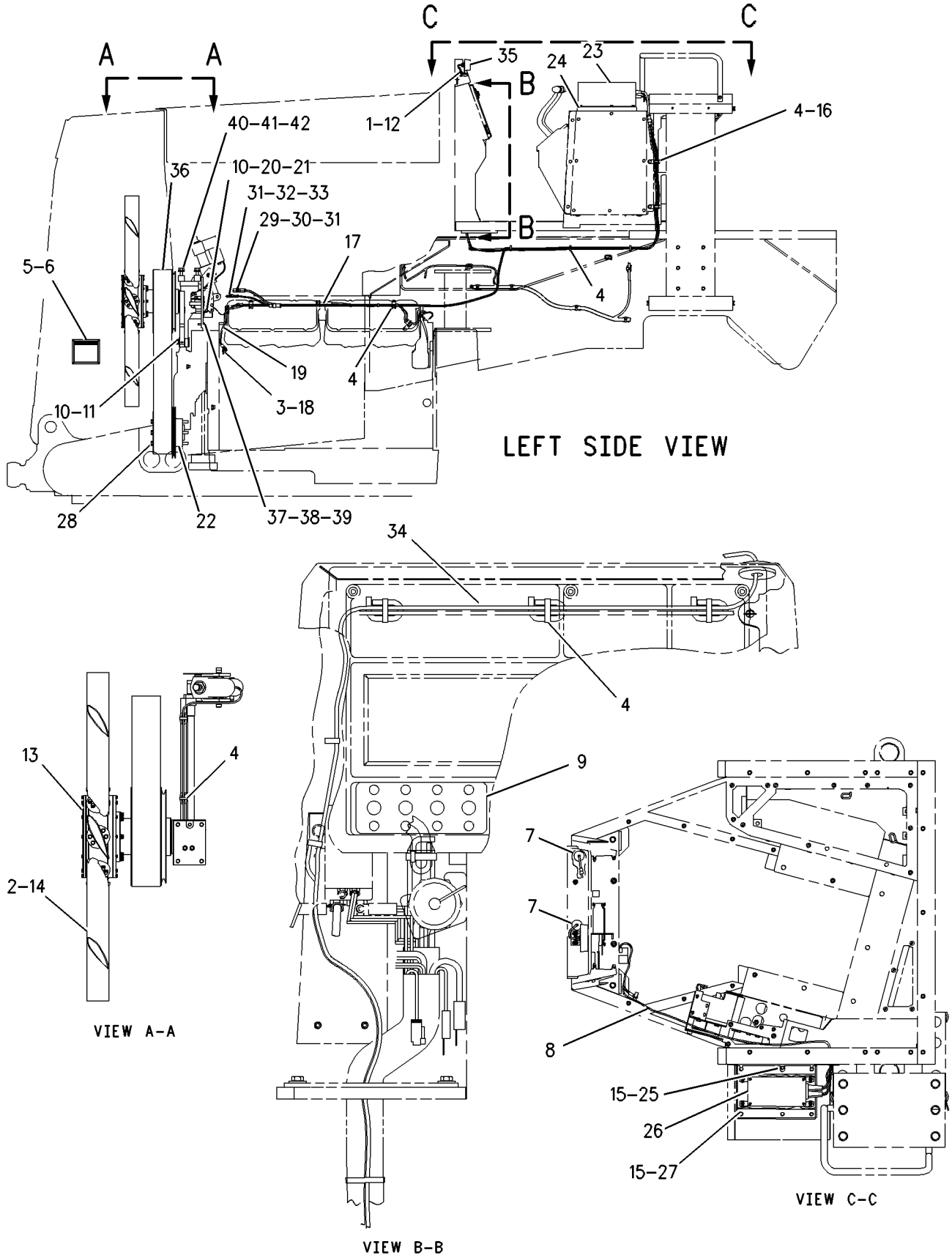

GRAPHIC #1 g00738062

COOLING SYSTEM

110-3020 LINES GP-WATER

S/N: 80M1-481

PART OF 115-7641 ENGINE AR

SMCS-1355, 1380, 1393 **i01740324**

NOTE	REF NO	GRAPHIC REF	PART NUMBER	QTY	PART NAME 1 2 3 4 5 6 (PRODUCT LEVEL)	SEE PAGE
	1	1	**108-1274**	1	TUBE AS	
	2	1	**0S-1571**	4	BOLT (3/8-16X1.75 IN)	
	3	1	**4N-4307**	1	GASKET	
	4	1	**7C-0307**	1	GASKET	
	5	1	**0S-1591**	6	BOLT (3/8-16X1.5 IN)	
	6	1	**5M-2894**	1	WASHER-HARD (10.2X18.5X2.5MM THK)	
	7	1	**8N-2282**	1	ELBOW	
	8	1	**109-8217**	1	ELBOW	
	9	1	**0T-0065**	1	BOLT (3/8-16X3.5 IN)	
	10	1	**8N-2306**	1	COUPLING	
	11	1	**8N-2113**	1	CONNECTOR	
	12	1	**0S-1588**	3	BOLT (3/8-16X1.25 IN)	
	13	1	**8N-0881**	1	ELBOW	
	14	1	**119-0586**	1	TUBE	
	15	1	**9S-8752**	9	NUT-FULL (3/8-16 THD)	
	16	1	**7N-5168**	1	TUBE	
	17	1	**6K-6165**	1	CLIP	
	18	1	**6K-6166**	1	BRACKET	
	19	1	**7W-3382**	1	BONNET	
	20	1	**0S-1594**	4	BOLT (3/8-16X1 IN)	
	21	1	**9L-9132**	2	WASHER (10.2X25.5X2.5MM THK)	
	22	1	**2W-0985**	1	BRACKET-MOUNTING	
	23	1	**0T-0768**	2	BOLT (7/16-14X1.75 IN)	
	24	1	**4S-9191**	2	WASHER (12X22.5X5MM THK)	
	25	1	**0S-1590**	2	BOLT (3/8-16X2 IN)	
	26	1	**8N-0882**	1	BONNET-INLET	
	27	1	**0S-1608**	2	BOLT (3/8-16X3.75 IN)	
	28	1	**7W-3379**	1	PLATE	
	29	1	**9X-6458**	3	WASHER-HARD (10.2X22.5X3MM THK)	
	30	1	**119-0585**	1	BRACKET	
	31	1	**109-0072**	4	SEAL-O-RING	
	32	1	**8T-6767**	5	PLUG-PIPE	
	33	1	**112-1577**	2	SEAL-O-RING	
	34	1	**112-3258**	3	SEAL-O-RING	
	35	1	**109-0073**	2	SEAL-O-RING	
	36	1	**8E-5170**	1	SLEEVE	
	37	1	**0L-1352**	1	BOLT (3/8-16X3.25 IN)	

110-3020 **LINES GP-WATER** *(contd.)* **i01740324**

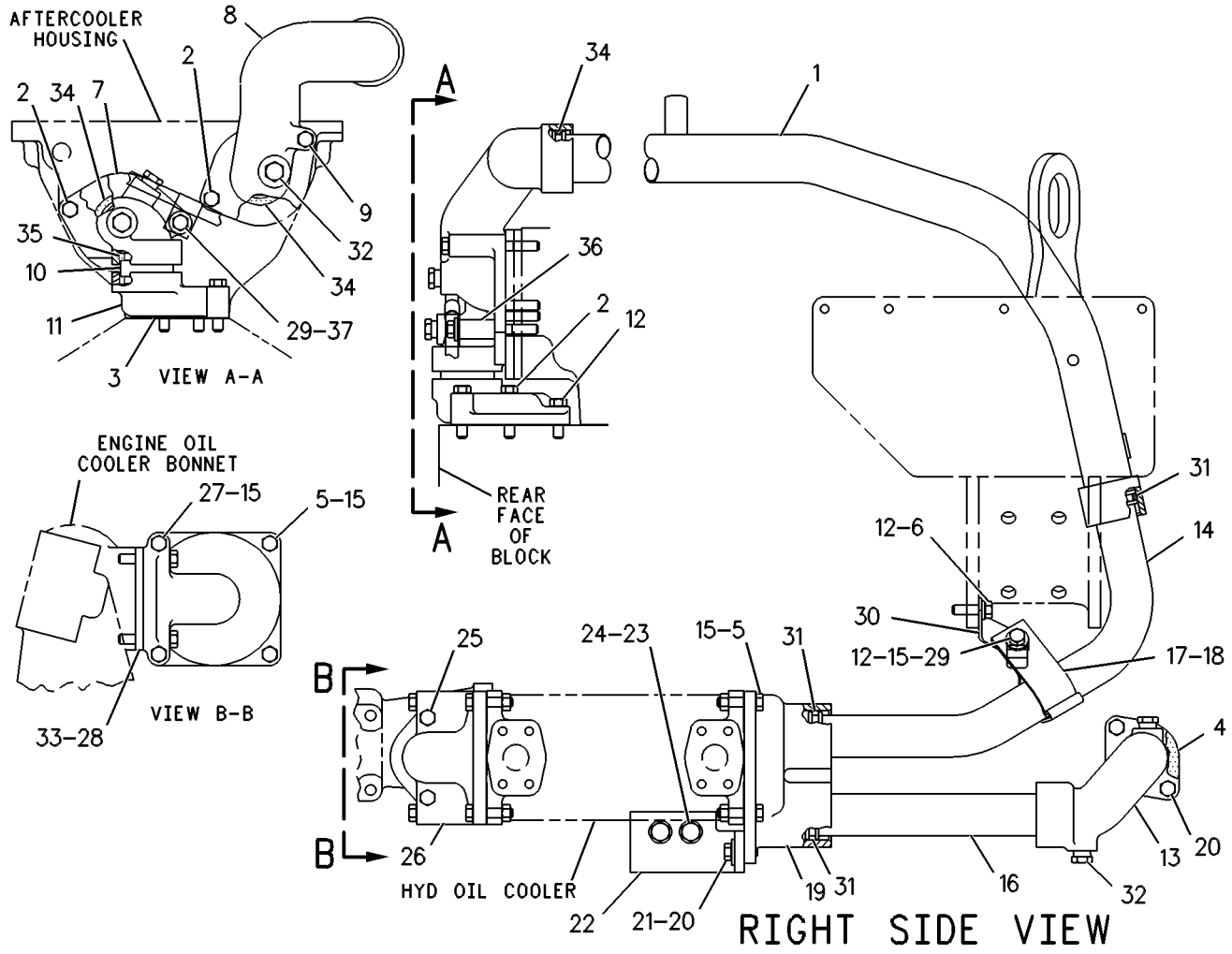

GRAPHIC #1 g00253039

COOLING SYSTEM

117-8621 LINES GP-WATER

S/N: 80M1-481

PART OF 115-7641 ENGINE AR

SMCS-1355, 1380, 1393 **i01740332**

NOTE	REF NO	GRAPHIC REF	PART NUMBER	QTY	PART NAME 1 2 3 4 5 6 (PRODUCT LEVEL)	SEE PAGE
	1	1	**111-4639**	1	COVER AS	
		1	**3S-9643**	1	SEAL-LIP	
		1	**7M-7410**	1	PLUG (3/8-18 NPTF)	
	2	1	**4N-1156**	2	GASKET-REGULATOR COVER	
	3	1	**7C-0307**	3	GASKET	
	4	1	**6N-7145**	1	BONNET-COOLER INLET	
	5	1	**8T-6764**	3	PLUG-PIPE	
	6	1	**117-8619**	1	PIPE	
	7	1	**122-5024**	1	ELBOW	
	8	1	**118-7214**	6	SEAL-O-RING	
	9	1	**111-4640**	1	COVER AS	
		1	**3S-9643**	1	SEAL-LIP	
	10	1	**122-5023**	1	ELBOW	
	11	1	**117-8618**	1	ELBOW	
	12	1	**117-9154**	1	FLANGE	
	13	1	**0L-1143**	1	BOLT (3/8-16X2.50 IN)	
	14	1	**123-2923**	1	ADAPTER	
	15	1	**0S-1591**	5	BOLT (3/8-16X1.5 IN)	
	16	1	**5B-9603**	2	BOLT (3/8-16X5 IN)	
	17	1	**4P-3864**	1	COVER-WATER PUMP	
	18	1	**1A-5183**	1	BOLT (3/8-16X4.75 IN)	
	19	1	**9S-1366**	3	BOLT (1/2-13X2.5 IN)	
	20	1	**5M-2894**	4	WASHER-HARD (10.2X18.5X2.5MM THK)	
	21	1	**109-2811**	1	PLATE-COVER	
	22	1	**109-0076**	1	SEAL-O-RING	
	23	1	**0S-1594**	6	BOLT (3/8-16X1 IN)	
	24	1	**4W-4794**	2	REGULATOR-WATER TEMPERATURE (92 DEG C.)	
	25	1	**7C-1933**	1	BONNET	
	26	1	**7C-1843**	1	BRACKET	
	27	1	**1A-5822**	2	BOLT (1/2-13X2.75 IN)	
	28	1	**7W-6534**	1	PLUG-PIPE	
	29	1	**0S-1587**	3	BOLT (1/2-13X1.75 IN)	
	30	1	**4N-2198**	1	FLANGE	
	31	1	**4N-2199**	2	GASKET	
	32	1	**4N-2380**	1	SPACER-OIL COOLER	
	33	1	**3B-1915**	3	BOLT (3/8-16X1.37 IN)	
	34	1	**109-0075**	1	SEAL-O-RING	
	35	1	**4N-8452**	1	SUPPORT	
	36	1	**1A-2029**	6	BOLT (3/8-16X1.125 IN)	
	37	1	**4N-1946**	1	GASKET	
	38	1	**0S-1588**	5	BOLT (3/8-16X1.25 IN)	
	39	1	**8T-6762**	2	PLUG-PIPE	
	40	1	**6N-0008**	1	ADAPTER	
	41	1	**109-0074**	1	SEAL-O-RING	
	42	1	**7X-7731**	3	PLUG-PIPE (3/4-14 NPTF THD)	
	43	1	**2W-7434**	1	BONNET-OIL COOLER	
	44	1	**0S-1619**	7	BOLT (3/8-16X3 IN)	
	45	1	**1B-2886**	4	BOLT (1/2-13X3.75 IN)	
	46	1	**102-2240**	1	SENSOR GP-TEMPERATURE	
		1	**102-8803**	1	KIT-RECEPTACLE (3 PIN)	
					(INCLUDES RECEPTACLE AS & WEDGE)	
		1	**3E-3371**	1	WEDGE-RECEPTACLE LOCK (3 PIN)	
		1	**8T-8729**	1	PIN-CONNECTOR	
BE		1	**9X-1813**		SLEEVE	
	47	1	**112-5282**	1	SEAL-O-RING	
	48	1	**0T-0065**	6	BOLT (3/8-16X3.5 IN)	

117-8621 LINES GP-WATER *(contd.)*

i01740332

NOTE	REF NO	GRAPHIC REF	PART NUMBER	QTY	PART NAME 1 2 3 4 5 6 (PRODUCT LEVEL)	SEE PAGE
	49	1	**8T-6761**	1	PLUG-PIPE	
	50	1	**8T-4984**	2	CLAMP-HOSE	
	51	1	**131-8428**	1	ELBOW	
	52	1	**108-8105**	2	GASKET	
E	53	1	**132-7370**	1	HOSE (13CM)	
	54	1	**0L-1351**	1	BOLT (3/8-16X0.875 IN)	
	55	1	**132-5125**	1	ELBOW	
	56	1	**132-7187**	1	BRACKET	
	57	1	**9X-6458**	2	WASHER-HARD (10.2X22.5X3MM THK)	
	58	1	**4N-0864**	1	GASKET	
	59	1	**0L-2070**	1	BOLT (3/8-16X2.25 IN)	

B-USE AS REQUIRED
E-ORDER BY THE CENTIMETER

117-8621 **LINES GP-WATER** *(contd.)* **i01740332**

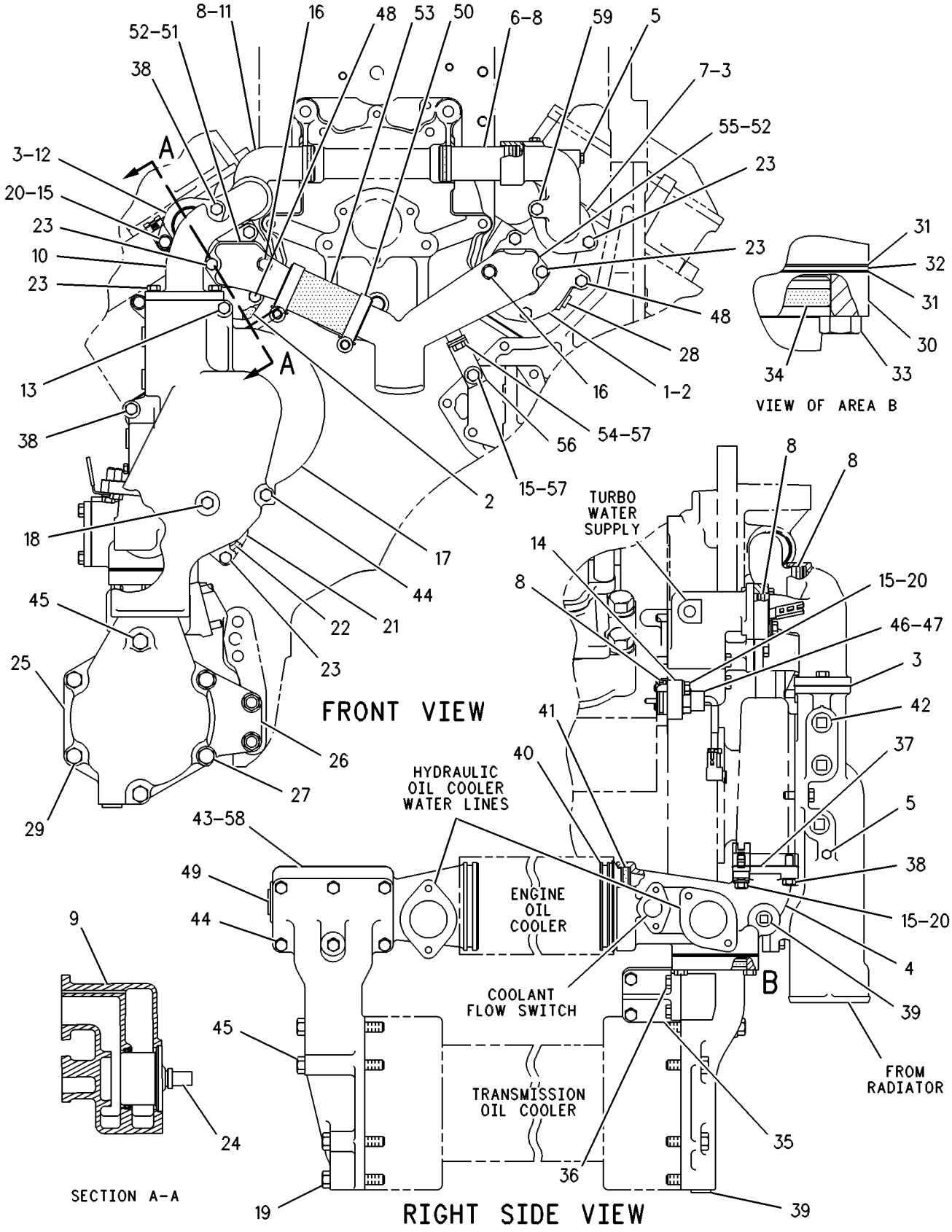

GRAPHIC #1 g00257493

COOLING SYSTEM

128-5108 LINES GP-WATER

S/N: 80M1-UP
PART OF 115-7641, 135-7810, 155-0058 ENGINE AR
ALSO AN ATTACHMENT

SMCS-1355, 1380, 1393 **i01740339**

NOTE	REF NO	GRAPHIC REF	PART NUMBER	QTY	PART NAME 1 2 3 4 5 6 (PRODUCT LEVEL)	SEE PAGE
	1	1	**0S-1594**	8	BOLT (3/8-16X1 IN)	
	2	1	**5M-2894**	8	WASHER-HARD (10.2X18.5X2.5MM THK)	
	3	1	**7N-7878**	2	PLATE-COVER	
	4	1	**7N-7628**	4	GASKET	
	5	1	**8N-0788**	2	COVER	
	6	1	**135-8288**	1	HOSE AS	
	7	1	**5P-9299**	1	CLIP	
	8	1	**6D-4246**	1	CLIP	
	9	1	**7W-3447**	1	SPACER (10.2X19.05X10.2MM THK)	
	10	1	**7L-7262**	1	ELBOW-FLARED	
	11	1	**3B-7742**	1	FITTING	

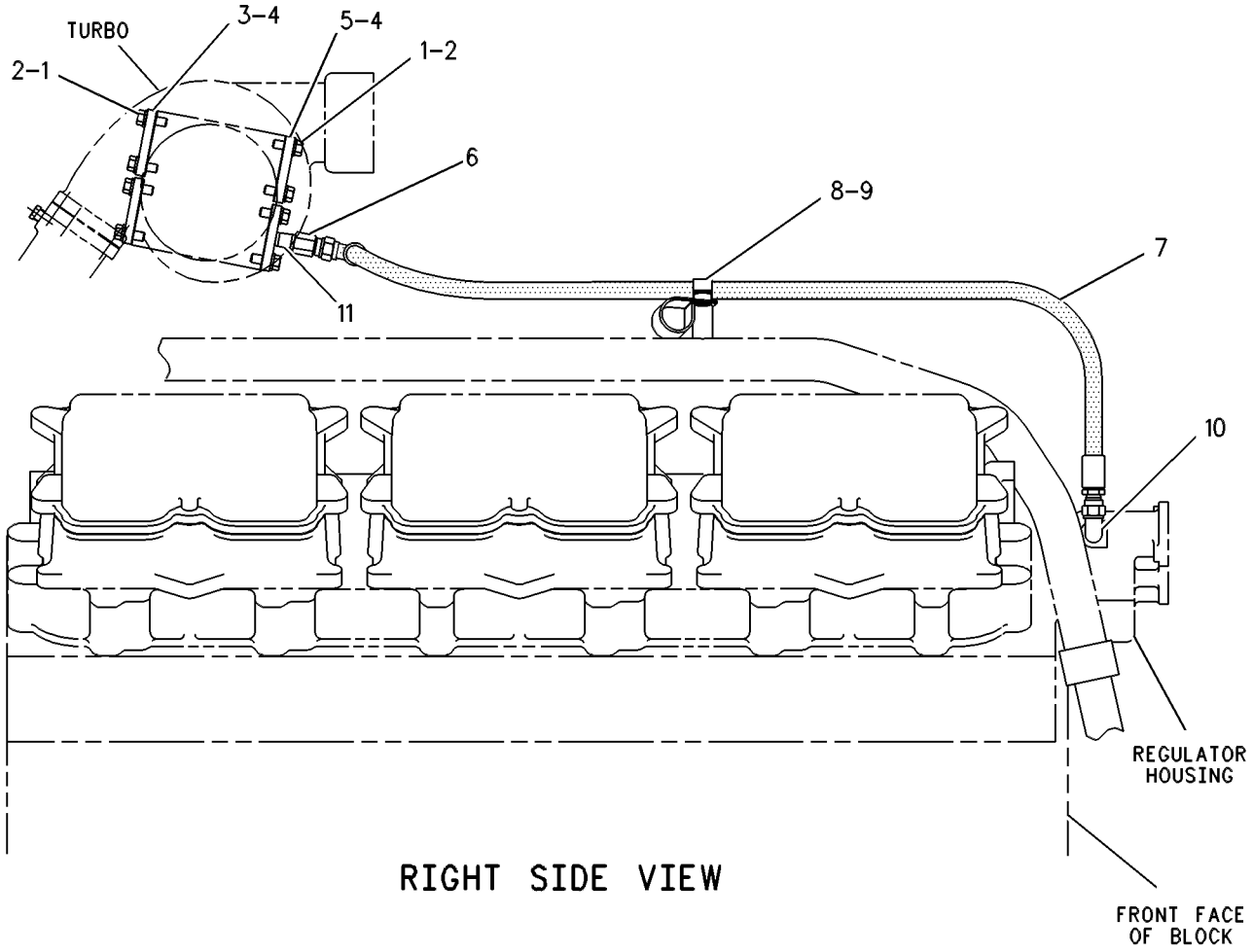

GRAPHIC #1 g00257407

COOLING SYSTEM

135-3703 LINES GP-WATER

S/N: 80M482-UP
PART OF 115-7641, 155-0058 ENGINE AR
ALSO AN ATTACHMENT

SMCS-1355, 1380, 1393 **i01740370**

NOTE	REF NO	GRAPHIC REF	PART NUMBER	QTY	PART NAME 1 2 3 4 5 6 (PRODUCT LEVEL)	SEE PAGE
	1	1	**111-4639**	1	COVER AS	
		1	**3S-9643**	1	SEAL-LIP	
		1	**7M-7410**	1	PLUG (3/8-18 NPTF)	
	2	1	**4N-1156**	2	GASKET-REGULATOR COVER	
	3	1	**7C-0307**	3	GASKET	
	4	1	**6N-7145**	1	BONNET-COOLER INLET	
	5	1	**8T-6764**	3	PLUG-PIPE	
	6	1	**117-8619**	1	PIPE	
	7	1	**122-5024**	1	ELBOW	
	8	1	**118-7214**	6	SEAL-O-RING	
	9	1	**111-4640**	1	COVER AS	
		1	**3S-9643**	1	SEAL-LIP	
	10	1	**122-5023**	1	ELBOW	
	11	1	**117-8618**	1	ELBOW	
	12	1	**117-9154**	1	FLANGE	
	13	1	**0L-1143**	1	BOLT (3/8-16X2.50 IN)	
	14	1	**123-2923**	1	ADAPTER	
	15	1	**0S-1591**	5	BOLT (3/8-16X1.5 IN)	
	16	1	**5B-9603**	2	BOLT (3/8-16X5 IN)	
	17	1	**4P-3864**	1	COVER-WATER PUMP	
	18	1	**1A-5183**	1	BOLT (3/8-16X4.75 IN)	
	19	1	**9S-1366**	3	BOLT (1/2-13X2.5 IN)	
	20	1	**5M-2894**	4	WASHER-HARD (10.2X18.5X2.5MM THK)	
	21	1	**109-2811**	1	PLATE-COVER	
	22	1	**109-0076**	1	SEAL-O-RING	
	23	1	**0S-1594**	6	BOLT (3/8-16X1 IN)	
	24	1	**4W-4794**	2	REGULATOR-WATER TEMPERATURE (92 DEG C.)	
	25	1	**7C-1933**	1	BONNET	
	26	1	**7C-1843**	1	BRACKET	
	27	1	**1A-5822**	2	BOLT (1/2-13X2.75 IN)	
	29	1	**0S-1587**	3	BOLT (1/2-13X1.75 IN)	
	30	1	**4N-2198**	1	FLANGE	
	31	1	**4N-2199**	2	GASKET	
	32	1	**4N-2380**	1	SPACER-OIL COOLER	
	33	1	**3B-1915**	3	BOLT (3/8-16X1.37 IN)	
	34	1	**109-0075**	1	SEAL-O-RING	
	35	1	**4N-8452**	1	SUPPORT	
	36	1	**1A-2029**	6	BOLT (3/8-16X1.125 IN)	
	37	1	**4N-1946**	1	GASKET	
	38	1	**0S-1588**	5	BOLT (3/8-16X1.25 IN)	
	39	1	**8T-6762**	2	PLUG-PIPE	
	40	1	**6N-0008**	1	ADAPTER	
	41	1	**109-0074**	1	SEAL-O-RING	
	42	1	**7X-7731**	3	PLUG-PIPE (3/4-14 NPTF THD)	
	43	1	**2W-7434**	1	BONNET-OIL COOLER	
	44	1	**0S-1619**	7	BOLT (3/8-16X3 IN)	
	45	1	**1B-2886**	4	BOLT (1/2-13X3.75 IN)	
	46	1	**102-2240**	1	SENSOR GP-TEMPERATURE	
		1	**3E-3371**	1	WEDGE-RECEPTACLE LOCK (3 PIN)	
		1	**8T-8729**	3	PIN-CONNECTOR	
		1	**102-8803**	1	KIT-RECEPTACLE (3 PIN)	
					(INCLUDES RECEPTACLE AS & WEDGE)	
BE		1	**9X-1813**		SLEEVE	
	47	1	**112-5282**	1	SEAL-O-RING	
	48	1	**0T-0065**	6	BOLT (3/8-16X3.5 IN)	

135-3703 LINES GP-WATER (contd.) i01740370

NOTE	REF NO	GRAPHIC REF	PART NUMBER	QTY	PART NAME 1 2 3 4 5 6 (PRODUCT LEVEL)	SEE PAGE
	49	1	**8T-6761**	1	PLUG-PIPE	
	50	1	**8T-4984**	2	CLAMP-HOSE	
	51	1	**131-8428**	1	ELBOW	
	52	1	**108-8105**	2	GASKET	
E	53	1	**132-7370**		HOSE (13CM)	
	54	1	**0L-1351**	1	BOLT (3/8-16X0.875 IN)	
	55	1	**132-5125**	1	ELBOW	
	56	1	**132-7187**	1	BRACKET	
	57	1	**9X-6458**	2	WASHER-HARD (10.2X22.5X3MM THK)	
	58	1	**4N-0864**	1	GASKET	
	59	1	**0L-2070**	1	BOLT (3/8-16X2.25 IN)	
	60	1	**109-0077**	2	SEAL-O-RING	
R	61	1	**4W-5412**	1	CORE GP-OIL COOLER	
		1	**5M-6214**	1	PLUG-PIPE	
R	62	1	**7C-0145**	1	CORE AS-OIL COOLER (ENGINE)	
	63	1	**7S-8767**	2	GASKET	

B-USE AS REQUIRED
E-ORDER BY THE CENTIMETER
R-REMFG PART MAY BE AVAILABLE

135-3703 **LINES GP-WATER** *(contd.)* **i01740370**

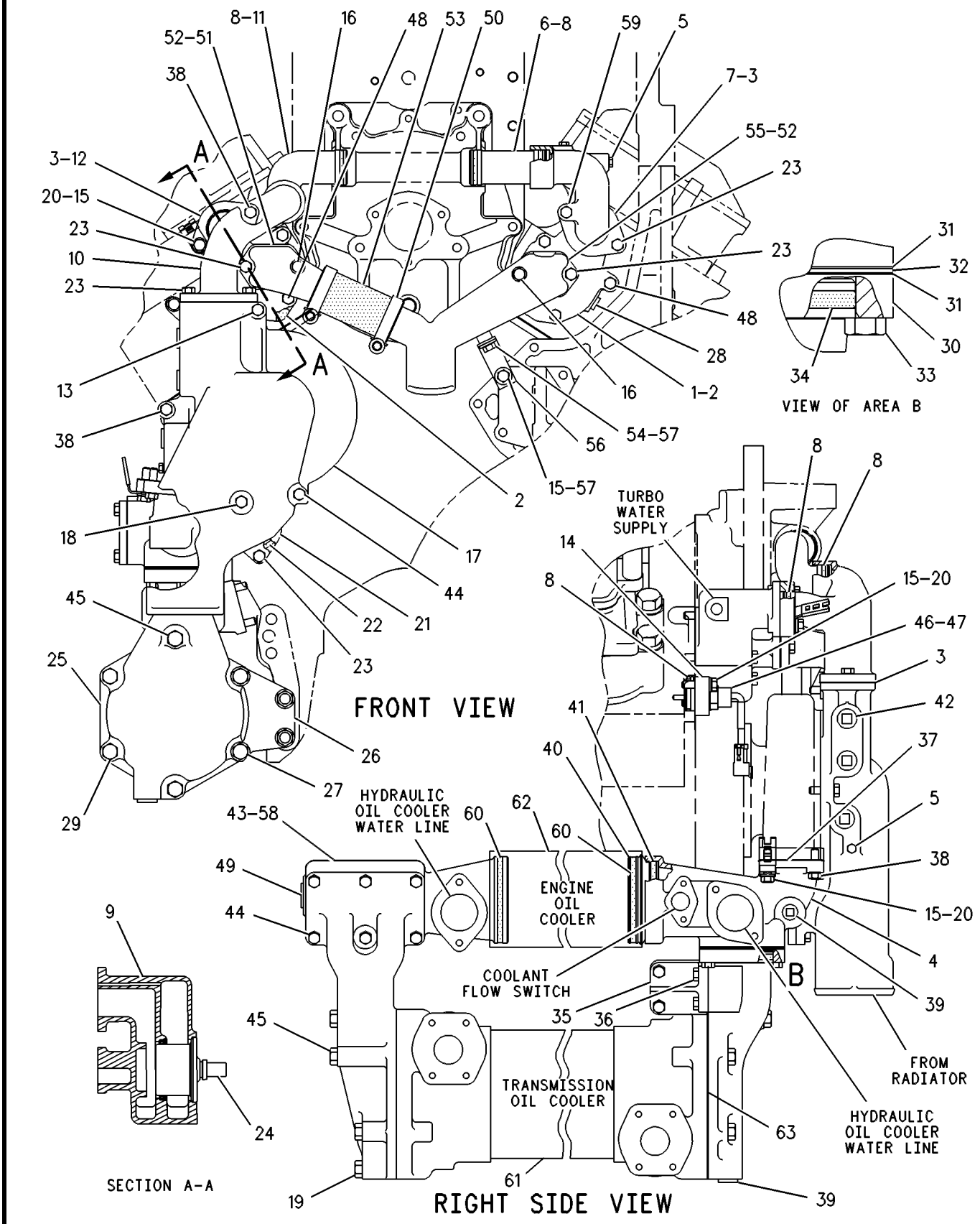

GRAPHIC #1 g00329714

MEMORANDA

COOLING SYSTEM

137-1789 LINES GP-WATER

S/N: 80M1-UP
PART OF 135-7810 ENGINE AR
AN ATTACHMENT

SMCS-1355, 1380, 1393 **i01740383**

NOTE	REF NO	GRAPHIC REF	PART NUMBER	QTY	PART NAME 1 2 3 4 5 6 (PRODUCT LEVEL)	SEE PAGE
	1	1	**130-2676**	1	COVER AS	
		1	**3S-9643**	1	SEAL-LIP	
	2	1	**4N-1156**	2	GASKET-REGULATOR COVER	
	3	1	**7C-0307**	3	GASKET	
	4	1	**6N-7145**	1	BONNET-COOLER INLET	
	5	1	**8T-6764**	3	PLUG-PIPE	
	6	1	**117-8619**	1	PIPE	
	7	1	**122-5024**	1	ELBOW	
	8	1	**118-7214**	6	SEAL-O-RING	
	9	1	**130-2677**	1	COVER AS	
		1	**3S-9643**	1	SEAL-LIP	
	10	1	**122-5023**	1	ELBOW	
	11	1	**117-8618**	1	ELBOW	
	12	1	**117-9154**	1	FLANGE	
	13	1	**0L-1143**	1	BOLT (3/8-16X2.50 IN)	
	14	1	**123-2923**	1	ADAPTER	
	15	1	**0S-1591**	5	BOLT (3/8-16X1.5 IN)	
	16	1	**5B-9603**	2	BOLT (3/8-16X5 IN)	
	17	1	**4P-3864**	1	COVER-WATER PUMP	
	18	1	**1A-5183**	1	BOLT (3/8-16X4.75 IN)	
	19	1	**5M-2894**	4	WASHER-HARD (10.2X18.5X2.5MM THK)	
	20	1	**109-2811**	1	PLATE-COVER	
	21	1	**109-0076**	1	SEAL-O-RING	
	22	1	**0S-1594**	6	BOLT (3/8-16X1 IN)	
	23	1	**7C-3095**	2	REGULATOR-WATER TEMPERATURE	
	24	1	**7C-1933**	1	BONNET	
	25	1	**7C-1843**	1	BRACKET	
	26	1	**1A-5822**	2	BOLT (1/2-13X2.75 IN)	
	27	1	**3B-6552**	1	ELBOW	
	28	1	**0S-1587**	3	BOLT (1/2-13X1.75 IN)	
	29	1	**4N-2198**	1	FLANGE	
	30	1	**4N-2199**	2	GASKET	
	31	1	**4N-2380**	1	SPACER-OIL COOLER	
	32	1	**3B-1915**	3	BOLT (3/8-16X1.37 IN)	
	33	1	**109-0074**	1	SEAL-O-RING	
	34	1	**4N-8452**	1	SUPPORT	
	35	1	**1A-2029**	6	BOLT (3/8-16X1.125 IN)	
	36	1	**4N-1946**	1	GASKET	
	37	1	**0S-1588**	5	BOLT (3/8-16X1.25 IN)	
	38	1	**8T-6762**	2	PLUG-PIPE	
	39	1	**6N-0008**	1	ADAPTER	
	40	1	**109-0075**	1	SEAL-O-RING	
	41	1	**7X-7731**	3	PLUG-PIPE (3/4-14 NPTF THD)	
	42	1	**137-1790**	1	BONNET AS-COOLER	
		1	**2W-7434**	1	BONNET-OIL COOLER	
	43	1	**0S-1619**	7	BOLT (3/8-16X3 IN)	
	44	1	**9S-1366**	3	BOLT (1/2-13X2.5 IN)	
	45	1	**102-2240**	1	SENSOR GP-TEMPERATURE	
		1	**3E-3371**	1	WEDGE-RECEPTACLE LOCK (3 PIN)	
		1	**8T-8729**	3	PIN-CONNECTOR	
E		1	**9X-1813**		SLEEVE (31CM)	
		1	**102-8803**	1	KIT-RECEPTACLE (3 PIN)	
					(INCLUDES RECEPTACLE AS & WEDGE)	
	46	1	**112-5282**	1	SEAL-O-RING	
	47	1	**0T-0065**	6	BOLT (3/8-16X3.5 IN)	

137-1789 LINES GP-WATER *(contd.)*

i01740383

NOTE	REF NO	GRAPHIC REF	PART NUMBER	QTY	PART NAME 1 2 3 4 5 6 (PRODUCT LEVEL)	SEE PAGE
	48	1	**8T-6761**	1	PLUG-PIPE	
	49	1	**8T-4984**	2	CLAMP-HOSE	
	50	1	**131-8428**	1	ELBOW	
	51	1	**108-8105**	2	GASKET	
	52	1	**132-7370**	1	HOSE	
	53	1	**0L-1351**	1	BOLT (3/8-16X0.875 IN)	
	54	1	**132-5125**	1	ELBOW	
	55	1	**132-7187**	1	BRACKET	
	56	1	**9X-6458**	2	WASHER-HARD (10.2X22.5X3MM THK)	
	57	1	**4N-0864**	1	GASKET	
	58	1	**0L-2070**	1	BOLT (3/8-16X2.25 IN)	
	59	1	**1B-2886**	4	BOLT (1/2-13X3.75 IN)	
	60	1	**109-0077**	2	SEAL-O-RING	
R	61	1	**4W-5412**	1	CORE GP-OIL COOLER	
		1	**5M-6214**	2	PLUG-PIPE	
R	62	1	**7C-0145**	1	CORE AS-OIL COOLER (ENGINE)	
	63	1	**7S-8767**	2	GASKET	
	64	1	**5P-3422**	1	TEE-PIPE	
	65	1	**2V-4868**	2	FITTING (1/8-27 PTF)	
	66	1	**6V-1813**	1	FITTING	
	67	1	**5G-2944**	1	VALVE-SHUTOFF	
E	68	1	**5P-1465**		HOSE (30 CM)	
	69	1	**1P-4278**	2	CLAMP-HOSE	
	70	1	**5P-4536**	1	ELBOW	
	71	1	**6V-1390**	1	COUPLING-PIPE	
	72	1	**3B-7741**	1	FITTING (3/8-18 NPT THD)	
	73	1	**3S-2093**	1	STRAP-CABLE	

E-ORDER BY THE CENTIMETER
R-REMFG PART MAY BE AVAILABLE

137-1789 **LINES GP-WATER** *(contd.)* **i01740383**

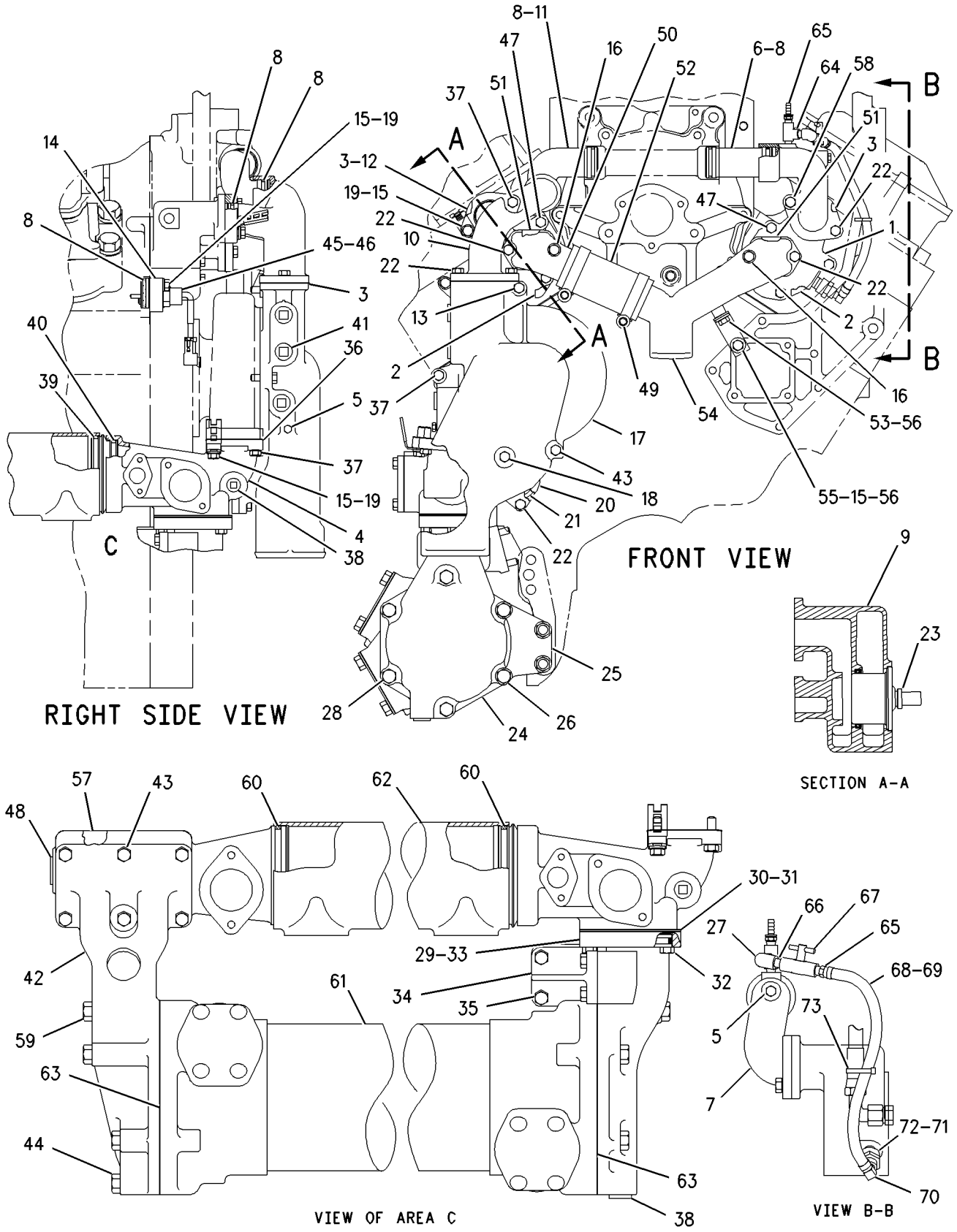

GRAPHIC #1 g00736564

COOLING SYSTEM

4N-5837 PUMP GP-WATER

S/N: 80M1-398
PART OF 115-7641, 135-7810 ENGINE AR
ALSO AN ATTACHMENT

SMCS-1361, 1363, 1364, 1373, 1384, 1389, 1394 **i01740388**

NOTE	REF NO	GRAPHIC REF	PART NUMBER	QTY	PART NAME 1 2 3 4 5 6 (PRODUCT LEVEL)	SEE PAGE
CYR	1	1	*105-0196*	1	PUMP GP-WATER	172
C	2	1	**112-1579**	1	SEAL-O-RING	
C	3	1	**101-2749**	1	ADAPTER-INLET	
C	4	1	**9X-7371**	1	SEAL-O-RING	
C	5	1	**112-1580**	1	SEAL-O-RING	
C	6	1	**9S-8752**	4	NUT-FULL (3/8-16 THD)	
	7	1	**0S-1594**	1	BOLT (3/8-16X1 IN)	

C-CHANGE FROM PREVIOUS TYPE
R-REMFG PART MAY BE AVAILABLE
Y-SEPARATE ILLUSTRATION

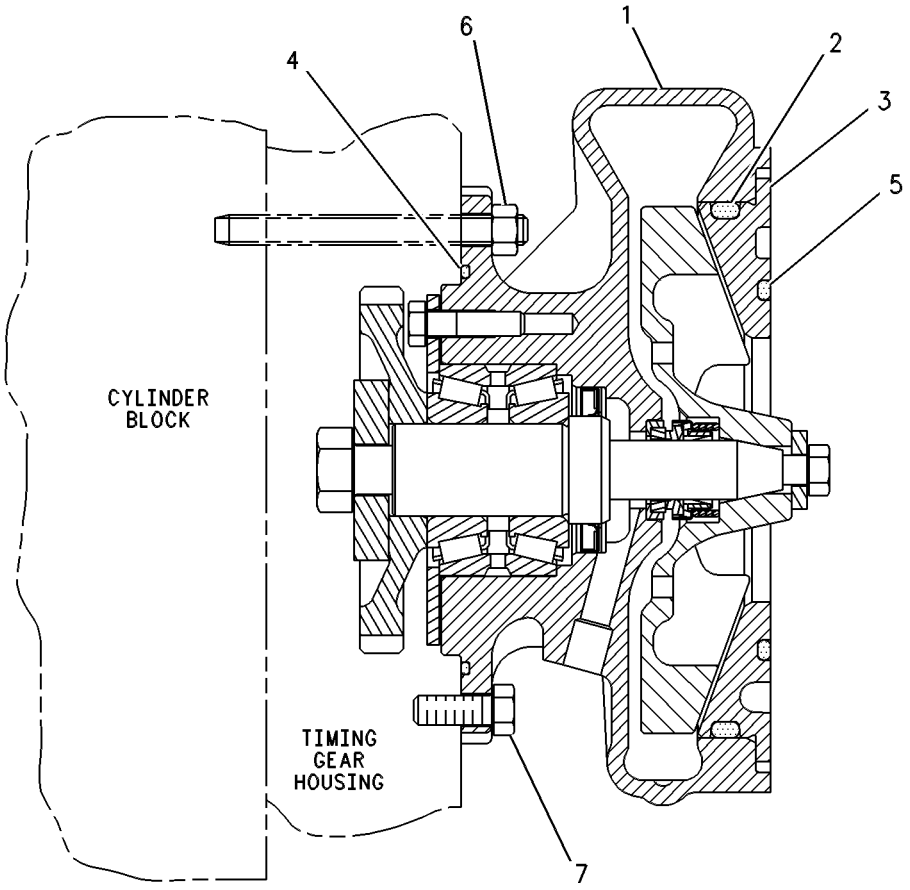

GRAPHIC #1 g00087114

COOLING SYSTEM

4N-5837 PUMP GP-WATER

S/N: 80M399-1090
PART OF 115-7641, 135-7810 ENGINE AR
ALSO AN ATTACHMENT

SMCS-1361, 1363, 1364, 1373, 1384, 1389, 1394 **i01740389**

NOTE	REF NO	GRAPHIC REF	PART NUMBER	QTY	PART NAME 1 2 3 4 5 6 (PRODUCT LEVEL)	SEE PAGE
CY	1	1	*134-1487*	1	PUMP GP-WATER	174
	2	1	**112-1579**	1	SEAL-O-RING	
	3	1	**101-2749**	1	ADAPTER-INLET	
	4	1	**9X-7371**	1	SEAL-O-RING	
	5	1	**112-1580**	1	SEAL-O-RING	
	6	1	**9S-8752**	4	NUT-FULL (3/8-16 THD)	
	7	1	**0S-1594**	1	BOLT (3/8-16X1 IN)	

C-CHANGE FROM PREVIOUS TYPE
Y-SEPARATE ILLUSTRATION

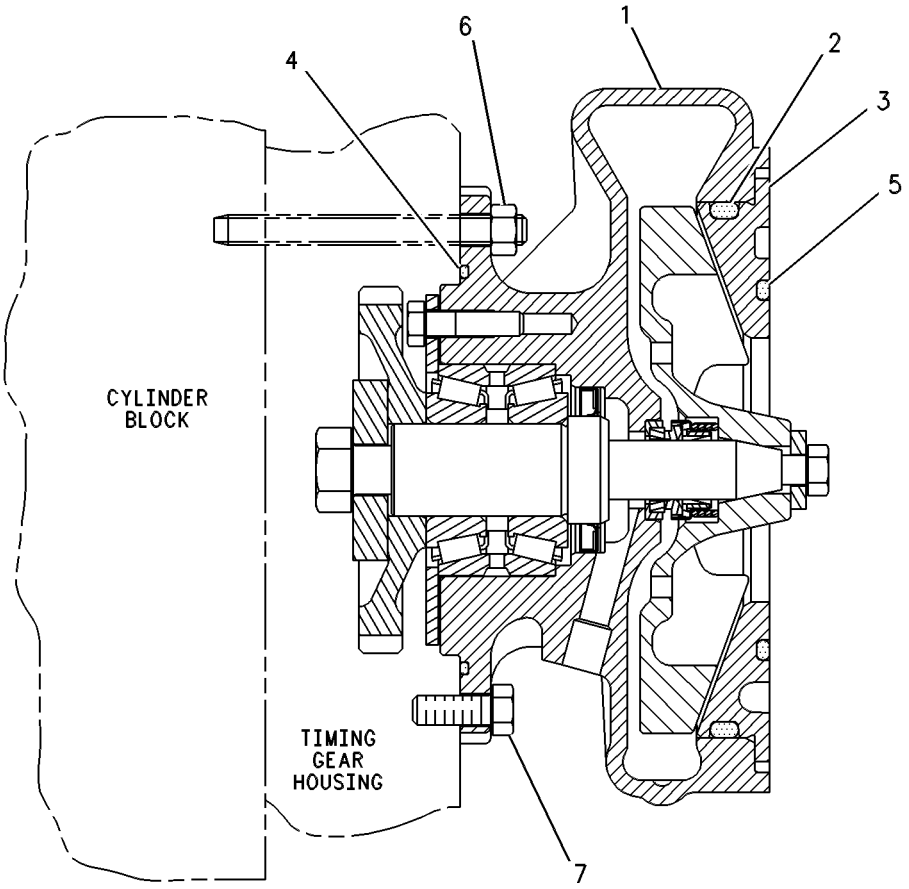

GRAPHIC #1 g00087114

COOLING SYSTEM

4N-5837 PUMP GP-WATER

S/N: 80M1091-UP
PART OF 115-7641, 135-7810, 155-0058 ENGINE AR
ALSO AN ATTACHMENT

SMCS-1361, 1363, 1364, 1373, 1384, 1389, 1394 **i01740390**

NOTE	REF NO	GRAPHIC REF	PART NUMBER	QTY	PART NAME 1 2 3 4 5 6 (PRODUCT LEVEL)	SEE PAGE
CYR	1	1	**137-1339**	1	PUMP GP-WATER	176
	2	1	**112-1579**	1	SEAL-O-RING	
	3	1	**101-2749**	1	ADAPTER-INLET	
	4	1	**9X-7371**	1	SEAL-O-RING	
	5	1	**112-1580**	1	SEAL-O-RING	
	6	1	**9S-8752**	4	NUT-FULL (3/8-16 THD)	
	7	1	**0S-1594**	1	BOLT (3/8-16X1 IN)	

C-CHANGE FROM PREVIOUS TYPE
R-REMFG PART MAY BE AVAILABLE
Y-SEPARATE ILLUSTRATION

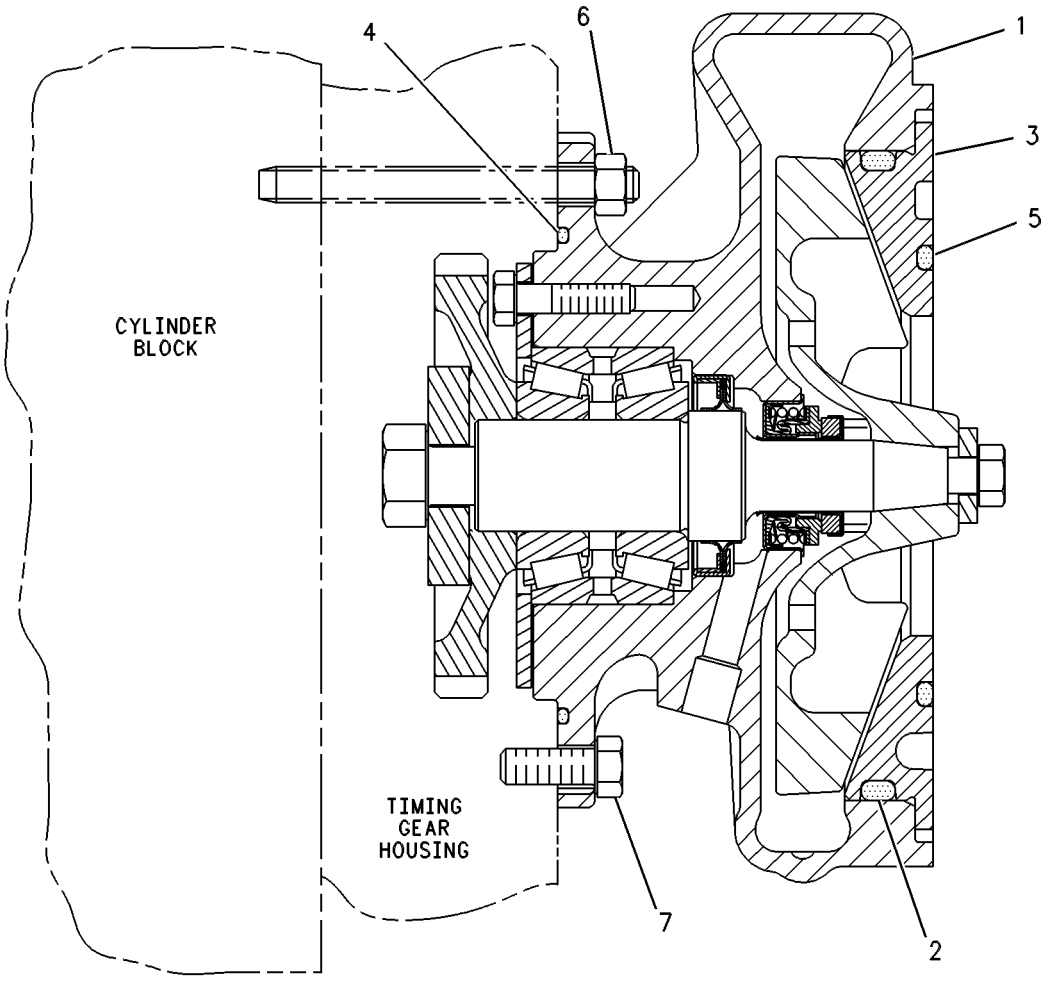

GRAPHIC #1 g00277057

COOLING SYSTEM

105-0196 PUMP GP-WATER*R

S/N: 80M1-398
PART OF 4N-5837 PUMP GP-WATER
ALSO AN ATTACHMENT

SMCS-1361, 1363, 1364, 1373, 1384, 1389, 1394 **i01509253**

NOTE	REF NO	GRAPHIC REF	PART NUMBER	QTY	PART NAME 1 2 3 4 5 6 (PRODUCT LEVEL)	SEE PAGE
	1	1	**7C-1068**	1	IMPELLER-PUMP	
J	2	1	**131-3815**	1	SEAL GP	
J	3	1	**9M-6527**	1	WASHER-HARD (10.2X25.5X5MM THK)	
J	4	1	**0S-1591**	1	BOLT (3/8-16X1.5 IN)	
J	5	1	**123-6666**	1	SHAFT-WATER PUMP	
J	6	1	**8C-3100**	1	SEAL-LIP	
	7	1	**1B-7182**	4	BOLT (5/16-18X1.25 IN)	
	8	1	**4N-1948**	1	GEAR (43 TEETH)	
	9	1	**1A-1135**	1	BOLT (5/8-11X2 IN)	
J	10	1	**108-7930**	1	BEARING AS-ROLLER	
	11	1	**105-3785**	1	RETAINER	
J	12	1	**5S-0581**	1	WASHER-HARD (17X38X8MM THK)	
	13	1	**105-3790**	1	HOUSING AS-PUMP	
	14	1	**8T-6764**	1	PLUG-PIPE	
	15	1	**4M-1336**	1	FERRULE	
	16	1	**5H-8985**	1	PIN-SPRING	
J	17	1	**111-2721**	1	FILTER (WATER PUMP)	
					AVAILABLE REPAIR KIT(S):	
AJ			**129-3069**	1	KIT-WATER PUMP REBUILD	

A-NOT PART OF THIS GROUP
J-KIT MARKED J INCLUDES PARTS MARKED J

105-0196 **PUMP GP-WATER** *(contd.)* **i01509253**

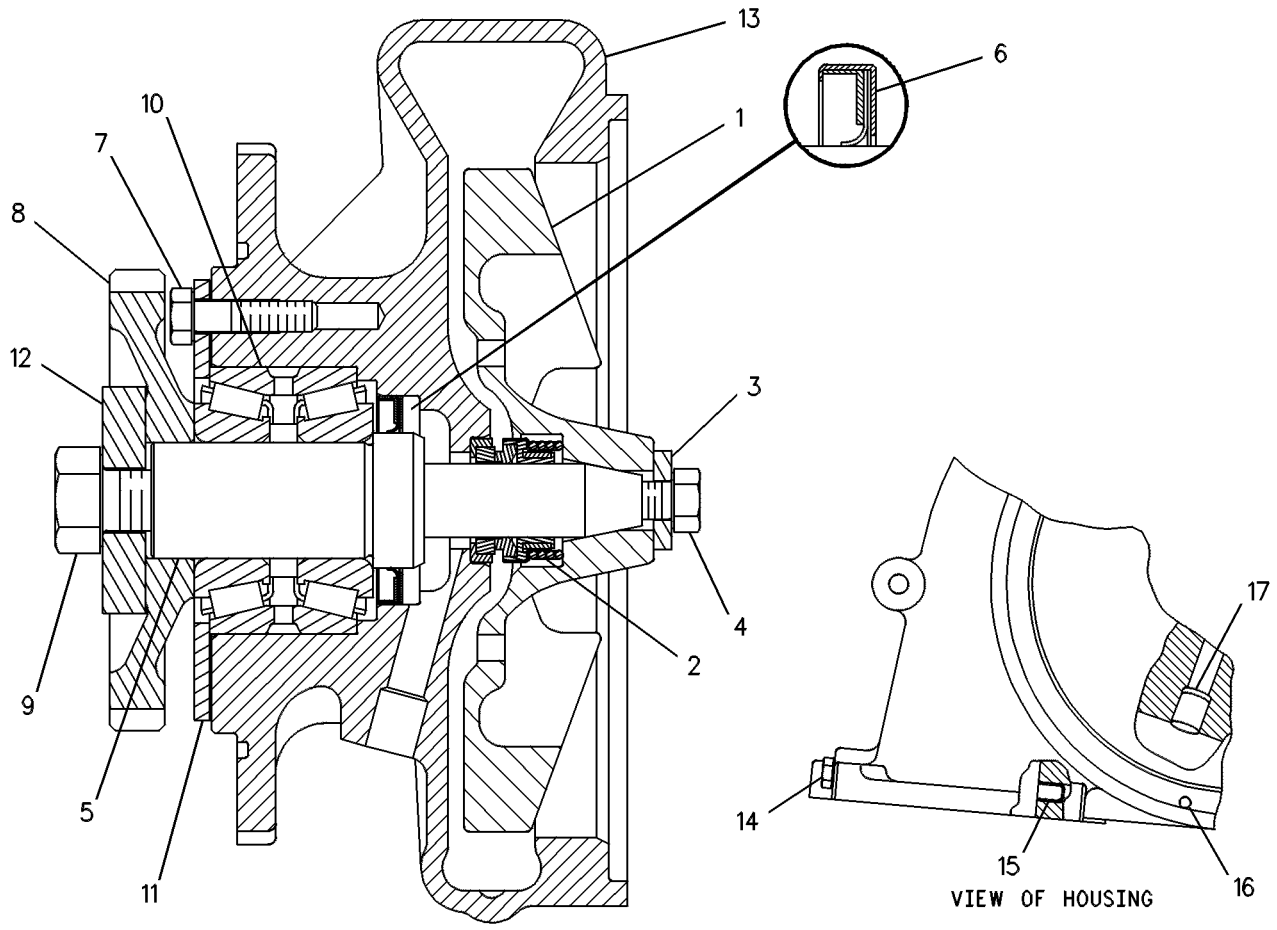

GRAPHIC #1 g00084490

COOLING SYSTEM

134-1487 PUMP GP-WATER

S/N: 80M399-1090
PART OF 4N-5837 PUMP GP-WATER
ALSO AN ATTACHMENT

SMCS-1361, 1363, 1364, 1373, 1384, 1389, 1394 **i01509264**

NOTE	REF NO	GRAPHIC REF	PART NUMBER	QTY	PART NAME 1 2 3 4 5 6 (PRODUCT LEVEL)	SEE PAGE
	1	1	**7C-1068**	1	IMPELLER-PUMP	
	2	1	**131-3815**	1	SEAL GP	
J	3	1	**9M-6527**	1	WASHER-HARD (10.2X25.5X5MM THK)	
J	4	1	**0S-1591**	1	BOLT (3/8-16X1.5 IN)	
J	5	1	**135-4928**	1	SHAFT-WATER PUMP	
	6	1	**8C-3100**	1	SEAL-LIP	
	7	1	**1B-7182**	4	BOLT (5/16-18X1.25 IN)	
	8	1	**4N-1948**	1	GEAR (43 TEETH)	
J	9	1	**1A-1135**	1	BOLT (5/8-11X2 IN)	
J	10	1	**108-7930**	1	BEARING AS-ROLLER	
J	11	1	**105-3785**	1	RETAINER	
J	12	1	**5S-0581**	1	WASHER-HARD (17X38X8MM THK)	
	13	1	**105-3790**	1	HOUSING AS-PUMP	
	14	1	**8T-6764**	1	PLUG-PIPE	
	15	1	**4M-1336**	1	FERRULE	
	16	1	**5H-8985**	1	PIN-SPRING	
J	17	1	**111-2721**	1	FILTER (WATER PUMP)	
					AVAILABLE REPAIR KIT(S):	
AJ			**127-9885**	1	KIT-WATER PUMP REBUILD	

A-NOT PART OF THIS GROUP
J-KIT MARKED J INCLUDES PARTS MARKED J

134-1487 **PUMP GP-WATER** *(contd.)* **i01509264**

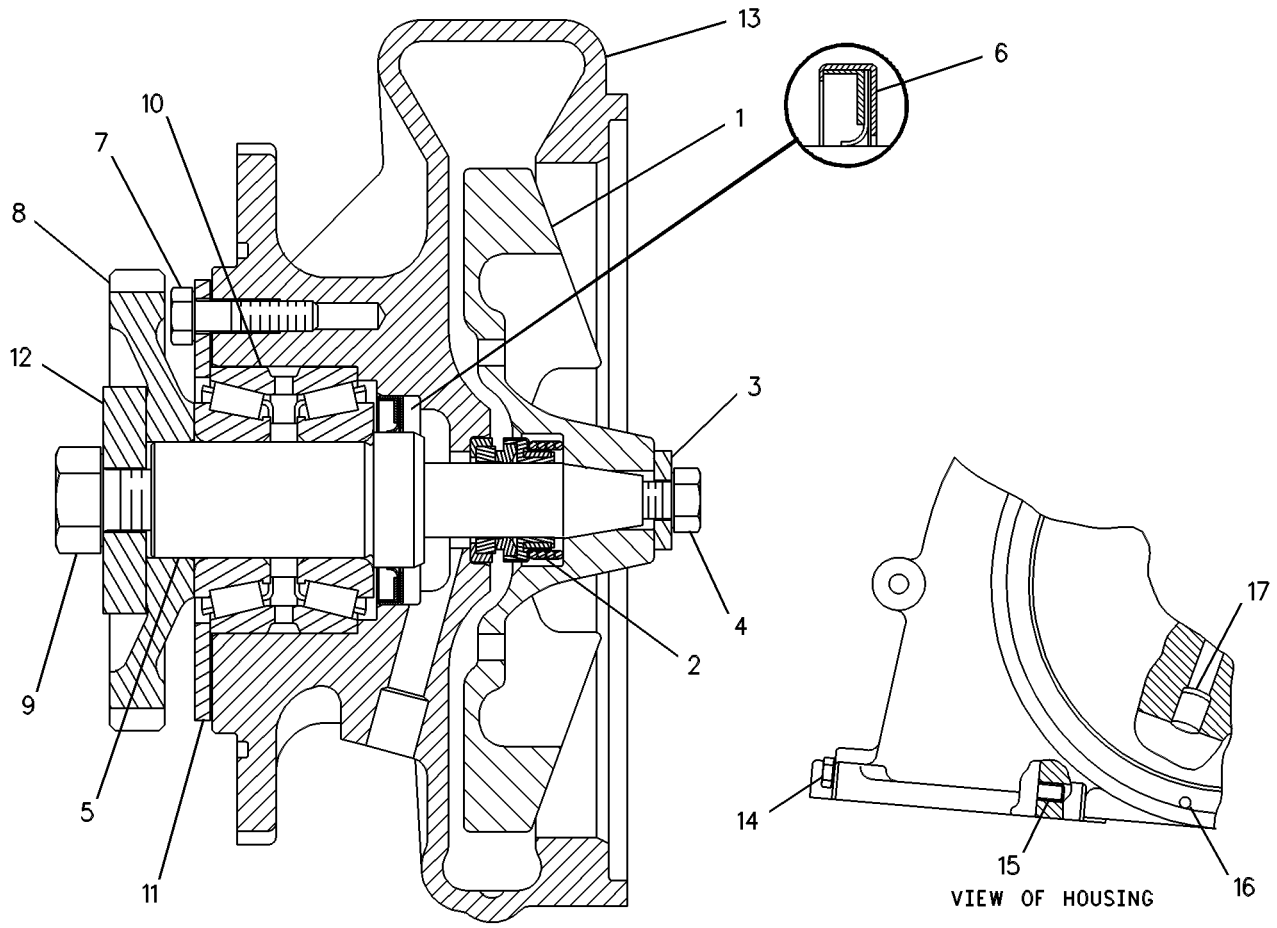

GRAPHIC #1 g00088372

COOLING SYSTEM

137-1339 PUMP GP-WATER*R

S/N: 80M1091-UP
PART OF 4N-5837 PUMP GP-WATER
ALSO AN ATTACHMENT

SMCS-1361, 1363, 1364, 1373, 1384, 1389, 1394 **i01509276**

NOTE	REF NO	GRAPHIC REF	PART NUMBER	QTY	PART NAME 1 2 3 4 5 6 (PRODUCT LEVEL)	SEE PAGE
	1	1	**137-1344**	1	HOUSING AS-PUMP	
J	2	1	**111-2721**	1	FILTER (WATER PUMP)	
		1	**4M-1336**	1	FERRULE	
		1	**5H-8985**	1	PIN-SPRING	
		1	**8T-6764**	1	PLUG-PIPE	
J	3	1	**128-0317**	1	SEAL GP	
J	4	1	**9M-6527**	1	WASHER-HARD (10.2X25.5X5MM THK)	
J	5	1	**0S-1591**	1	BOLT (3/8-16X1.5 IN)	
J	6	1	**108-7930**	1	BEARING AS-ROLLER	
J	7	1	**153-1256**	1	SEAL-LIP TYPE	
	8	1	**1B-7182**	4	BOLT (5/16-18X1.25 IN)	
	9	1	**4N-1948**	1	GEAR (43 TEETH)	
	10	1	**1A-1135**	1	BOLT (5/8-11X2 IN)	
J	11	1	**135-4928**	1	SHAFT-WATER PUMP	
J	12	1	**136-1107**	1	RETAINER	
J	13	1	**5S-0581**	1	WASHER-HARD (17X38X8MM THK)	
	14	1	**137-1970**	1	IMPELLER-PUMP	
					AVAILABLE REPAIR KIT(S):	
AJ			**138-6744**	1	KIT-PUMP REBUILD (WATER)	

A-NOT PART OF THIS GROUP
J-KIT(S) MARKED J INCLUDES PART(S) MARKED J

137-1339 **PUMP GP-WATER** *(contd.)* **i01509276**

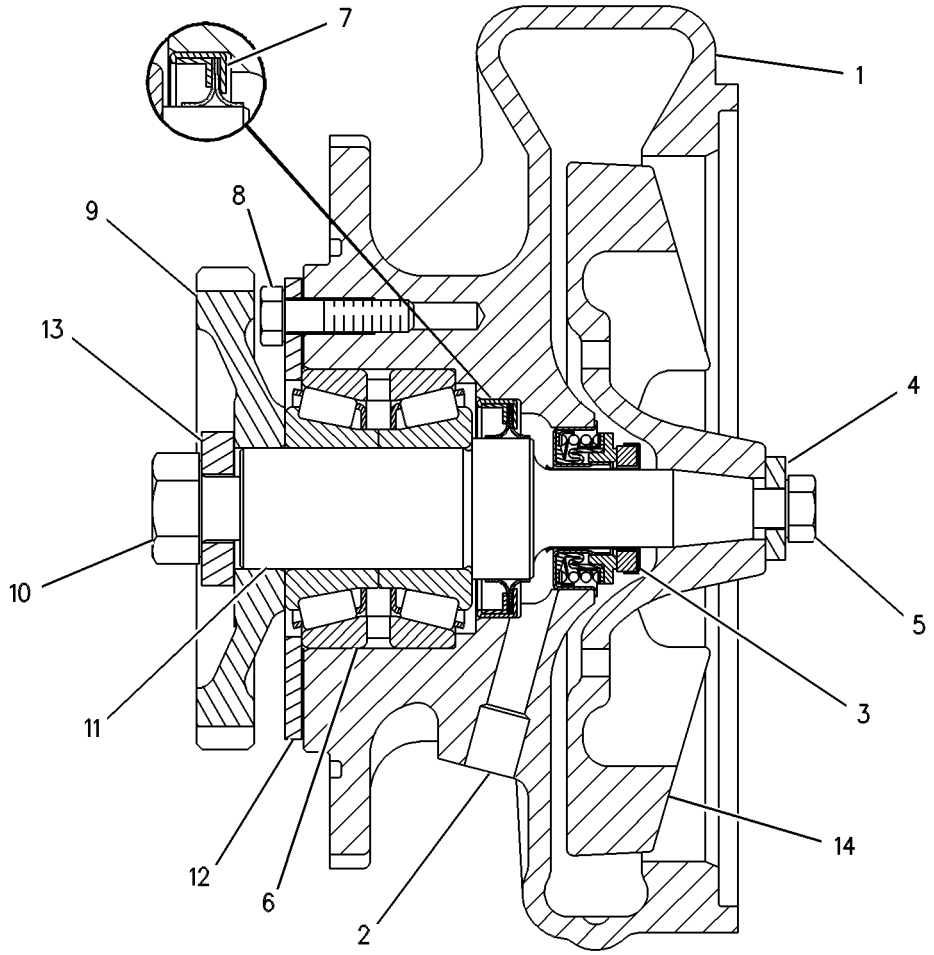

GRAPHIC #1 g00277052

COOLING SYSTEM

124-6867 RADIATOR GP

S/N: 3KR1-UP

PART OF 125-0254 RADIATOR GP

SMCS-1351 **i01506954**

NOTE	REF NO	GRAPHIC REF	PART NUMBER	QTY	PART NAME 1 2 3 4 5 6 (PRODUCT LEVEL)	SEE PAGE
	1	1	**197-8663**	1	TANK AS-RADIATOR (BOTTOM)	
		1	**1F-0750**	8	NUT-WELD (3/8-16 THD)	
	2	1	**4L-6454**	22	BOLT (3/8-16X1 IN)	
	3	1	**175-7783**	1	CHANNEL AS	
		1	**1F-0750**	23	NUT-WELD (3/8-16 THD)	
	4	1	**175-7784**	1	CHANNEL AS	
		1	**1F-0750**	23	NUT-WELD (3/8-16 THD)	
	5	1	**6I-2431**	11	SEAL	
	6	1	**124-6864**	1	PLATE AS	
		1	**1F-0750**	28	NUT-WELD (3/8-16 THD)	
	7	1	**6I-2435**	11	SPACER	
	8	1	**146-6204**	11	RETAINER	
	9	1	**119-4774**	11	CORE AS-RADIATOR	
	10	1	**137-4707**	1	PLATE	
	11	1	**106-4572**	10	HOSE	
	12	1	**1P-4278**	20	CLAMP-HOSE	
	13	1	**8T-2502**	30	BOLT (3/8-16X1.125 IN)	
	14	1	**5P-1075**	52	WASHER-HARD (10.2X22.5X3MM THK)	
	15	1	**135-4553**	1	BRACKET	
E	16	1	**153-9516**		SEAL (140CM)	

E-ORDER BY THE CENTIMETER

124-6867 **RADIATOR GP** *(contd.)* **i01506954**

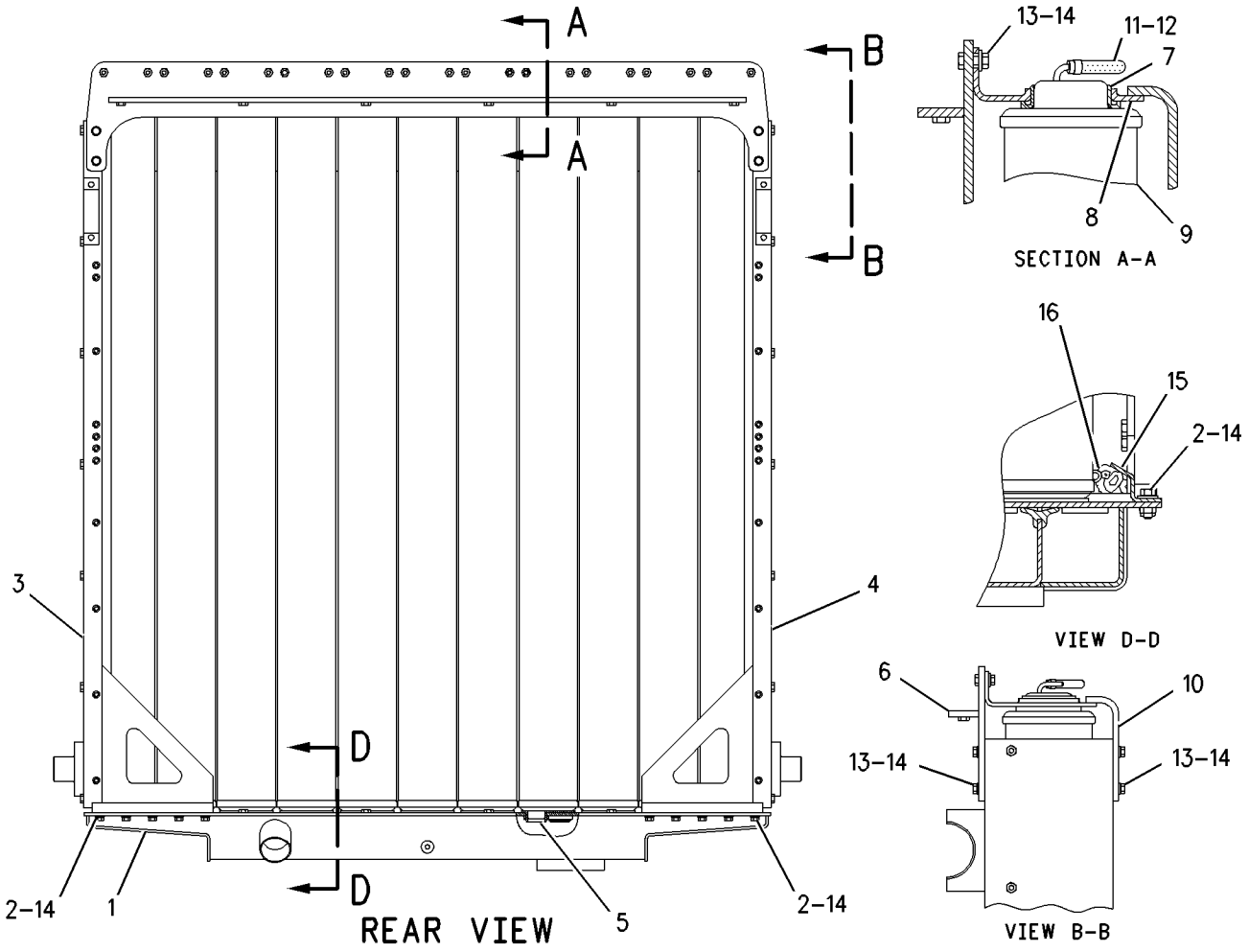

GRAPHIC #1 g00656631

COOLING SYSTEM

125-0254 RADIATOR GP

S/N: 3KR1-UP

SMCS-1351 **i01740508**

NOTE	REF NO	GRAPHIC REF	PART NUMBER	QTY	PART NAME 1 2 3 4 5 6 (PRODUCT LEVEL)	SEE PAGE
	1	1	**8T-6675**	4	CLAMP-HOSE	
	2	1	**161-0018**	1	HOSE	
	3	1	**9B-7237**	6	BOLT (3/8-16X1.25 IN)	
	4	1	**119-7258**	1	SHIELD AS-BOTTOM-LH	
		1	**1F-0750**	3	NUT-WELD (3/8-16 THD)	
		1	**4D-6716**	6	RIVET-POP	
		1	**7G-5186**	3	SPACER (13X19X4.5MM THK)	
	5	1	**125-0260**	1	TUBE AS	
	6	1	**5S-7379**	17	BOLT (3/8-16X0.875 IN)	
	7	1	**7N-1464**	1	VALVE AS-DRAIN	
		1	**3B-0551**	1	PLUG-PIPE	
		1	**7N-1447**	1	PLUG-DRAIN	
		1	**7N-1448**	1	ADAPTER-PLUG	
		1	**9H-6687**	1	PIN-SPRING	
	8	1	**4L-6454**	39	BOLT (3/8-16X1 IN)	
	9	1	**5P-1075**	43	WASHER-HARD (10.2X22.5X3MM THK)	
	10	1	**119-7257**	1	SHIELD AS-TOP-RH	
	11	1	**119-7256**	1	SHIELD AS-TOP-LH	
					(EACH SHIELD AS INCLUDES)	
		1	**1F-0750**	6	NUT-WELD (3/8-16 THD)	
		1	**4D-6716**	7	RIVET-POP	
		1	**7G-5186**	3	SPACER (13X19X4.5MM THK)	
	12	1	**126-3579**	1	PLATE AS-LH	
		1	**1F-0750**	5	NUT-WELD (3/8-16 THD)	
	13	1	**8T-4896**	19	WASHER-HARD (10.2X18.5X2.5MM THK)	
	14	1	**8F-1846**	2	GASKET	
	15	1	**8T-9101**	1	BOLT (3/8-16X2.75 IN)	
	16	1	**7X-7731**	1	PLUG-PIPE (3/4-14 NPTF THD)	
	17	1	**7N-1459**	1	ELBOW	
	18	1	**119-7259**	1	SHIELD AS-BOTTOM-RH	
		1	**1F-0750**	3	NUT-WELD (3/8-16 THD)	
		1	**4D-6716**	6	RIVET-POP	
		1	**7G-5186**	3	SPACER (13X19X4.5MM THK)	
	19	1	**126-3578**	1	PLATE AS-RH	
		1	**1F-0750**	5	NUT-WELD (3/8-16 THD)	
	20	1	**3R-5387**	1	CONNECTOR	
I	21	1	**2W-6908**	1	HOSE AS-END	
	22	1	**3S-8664**	2	CLIP	
	23	1	**4R-6450**	1	ELBOW	
	24	1	**5M-3062**	2	BOLT (3/8-16X0.75 IN)	
I	25	1	**9L-5312**	1	HOSE AS-END	
	26	1	**7X-0295**	2	BOLT (3/8-16X5.25IN)	
	27	1	**7W-5990**	1	ELBOW	
	28	1	**7N-4932**	1	GASKET	
	29	1	**8T-2502**	2	BOLT (3/8-16X1.125 IN)	
BE	30	1	**5P-1262**		HOSE (16CM)	
BE	31	1	**5P-1268**		HOSE (13CM)	
	32	1	**8T-4986**	4	CLAMP-HOSE	
BE	33	1	**5P-1268**		HOSE (13CM)	
	34	1	**7N-1430**	1	ELBOW-PUMP INLET	
	35	1	**001-6842**	1	TEE	
	36	1	**8N-0301**	1	VALVE AS (CHECK)	
		1	**7N-7688**	1	FERRULE	
		1	**9M-5590**	1	BALL	
	37	1	**8T-6871**	6	BOLT (5/8-11X2.50 IN)	
	38	1	**8T-4122**	12	WASHER-HARD (17X32X3.5MM THK)	
	39	1	**7W-5532**	2	SHAFT	

125-0254 **RADIATOR GP** *(contd.)* **i01740508**

NOTE	REF NO	GRAPHIC REF	PART NUMBER	QTY	PART NAME 1 2 3 4 5 6 (PRODUCT LEVEL)	SEE PAGE
	40	1	**8N-7257**	4	MOUNT AS	
	41	1	**7N-1639**	4	CAP	
	42	1	**8T-8920**	8	BOLT (1/2-13X3.25 IN)	
	43	1	**8T-4223**	8	WASHER-HARD (13.5X25.5X3MM THK)	
	44	1	**7X-0350**	6	BOLT (5/8-11X3.50 IN)	
	45	1	**7W-7233**	2	MOUNT-RADIATOR	
	46	1	**7N-3864**	2	SUPPORT	
Y	47	1	*124-6867*	1	RADIATOR GP	178
	48	1	**8T-6764**	1	PLUG-PIPE	
	49	1	**130-2597**	2	BAFFLE AS	
					(EACH INCLUDES)	
		1	**7G-5186**	8	SPACER (13X19X4.5MM THK)	
	50	1	**133-9528**	2	BAFFLE AS	
					(EACH INCLUDES)	
		1	**7G-5186**	3	SPACER (13X19X4.5MM THK)	
	51	1	**133-9529**	2	STRIP	
	52	1	**7W-7346**	4	STRIP	
	53	1	**2B-0941**	1	SPACER (10.5X19X19MM THK)	
	54	1	**5S-7383**	1	BOLT (3/8-16X1.75 IN)	
	55	1	**8S-0948**	2	CLIP	
	56	1	**7D-4903**	2	ADAPTER	
	57	1	**220-4387**	1	BAFFLE AS	
		1	**7G-5186**	3	SPACER (13X19X4.5MM THK)	
	58	1	**220-4386**	1	BAFFLE AS	
		1	**7G-5186**	3	SPACER (13X19X4.5MM THK)	

B-USE AS REQUIRED
E-ORDER BY THE CENTIMETER
I-SEE HOSE FABRICATION GUIDE
Y-SEPARATE ILLUSTRATION

125-0254 **RADIATOR GP** *(contd.)* **i01740508**

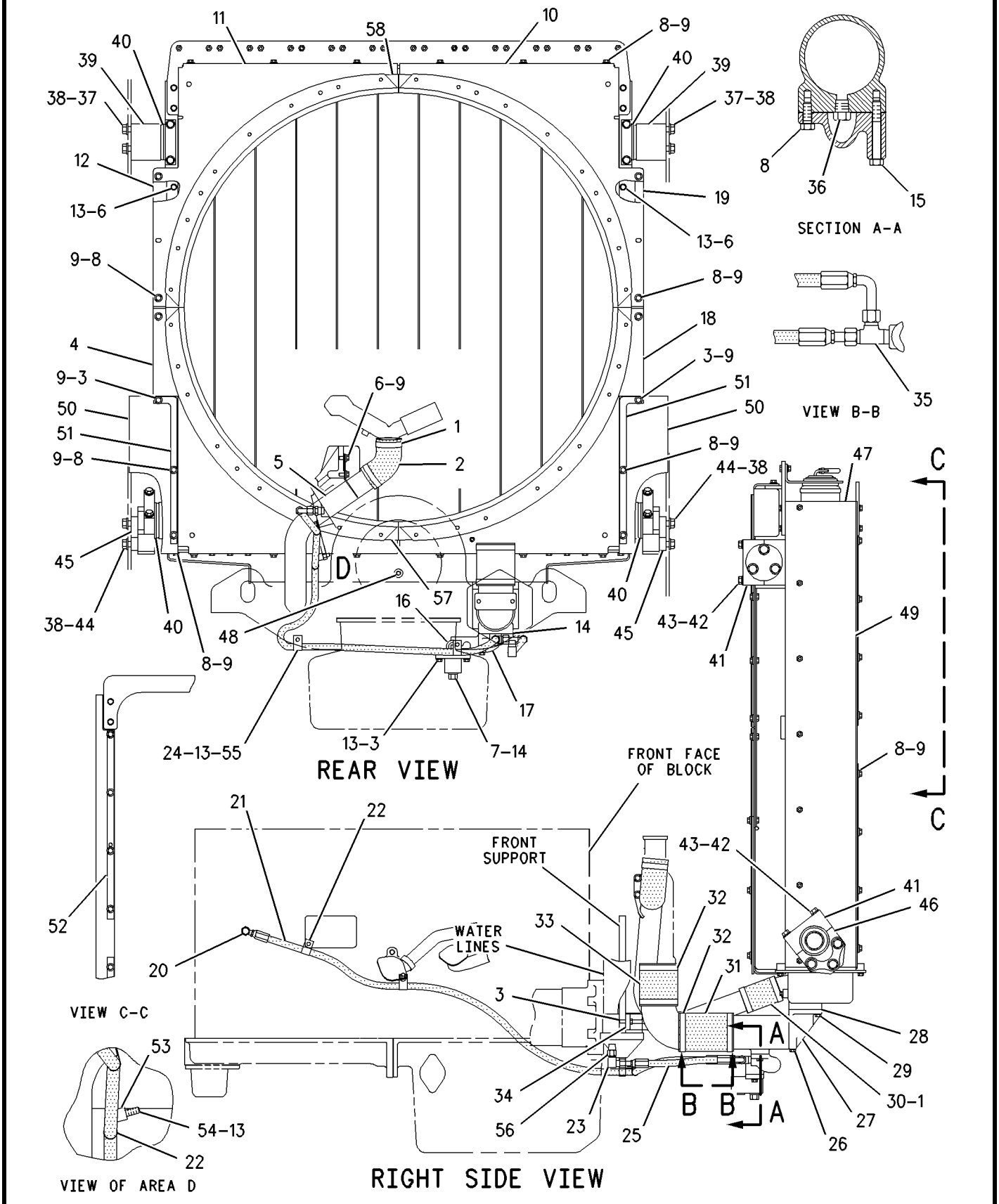

GRAPHIC #1 g00879561

COOLING SYSTEM

159-1966 TANK GP-COOLANT

S/N: 3KR1045-UP
PART OF 125-5457, 133-6441 TANK GP-WATER
ALSO AN ATTACHMENT

SMCS-1354, 1377 **i00894016**

NOTE	REF NO	GRAPHIC REF	PART NUMBER	QTY	PART NAME 1 2 3 4 5 6 (PRODUCT LEVEL)	SEE PAGE
	1	1	**154-3771**	1	TANK AS	
		1	**151-3015**	1	NECK AS	
		1	**3L-5893**	1	TUBE-OVERFLOW	
	2	1	**031-1119**	1	CAP AS-RADIATOR	

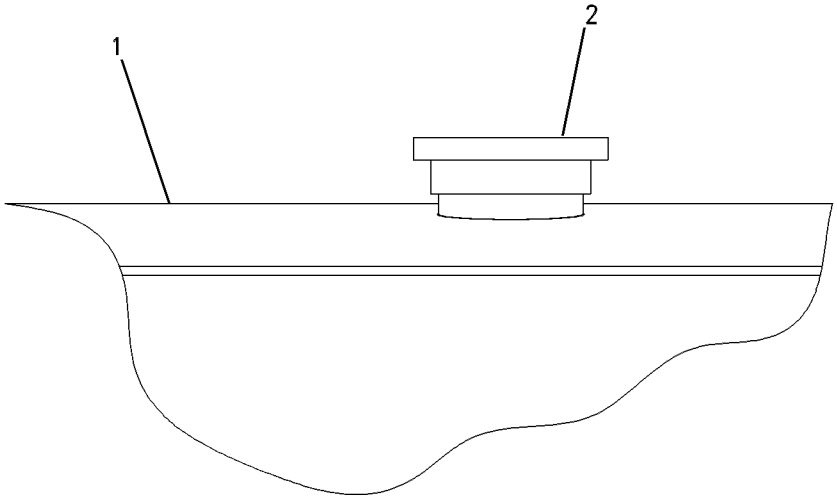

GRAPHIC #1 g00497464

COOLING SYSTEM

125-5457 TANK GP-WATER

S/N: 3KR1-1044

SMCS-1377 **i01740447**

NOTE	REF NO	GRAPHIC REF	PART NUMBER	QTY	PART NAME 1 2 3 4 5 6 (PRODUCT LEVEL)	SEE PAGE
	1	1	**125-5458**	1	TANK AS	
		1	**6B-8692**	1	BOSS	
		1	**8N-8846**	1	NECK-FILLER	
	2	1	**9Y-9236**	1	BODY AS-GAUGE	
	3	1	**7M-8485**	1	SEAL-O-RING	
	4	1	**031-1119**	1	CAP AS-RADIATOR	
	5	1	**5P-2566**	4	BOLT (1/2-13X1.5 IN)	
	6	1	**8T-4223**	4	WASHER-HARD (13.5X25.5X3MM THK)	
E	7	1	**5P-1251**		HOSE (197CM)	
E	8	1	**5P-1465**		HOSE (40CM)	
	9	1	**1P-4278**	8	CLAMP-HOSE	
	10	1	**109-6550**	1	TEE	
	11	1	**8M-2770**	2	CLIP	
	12	1	**4D-9517**	5	CLIP	
	13	1	**5P-4536**	1	ELBOW	
	14	1	**9G-0150**	1	BRACKET	
	15	1	**4L-6454**	2	BOLT (3/8-16X1 IN)	
	16	1	**8T-4896**	5	WASHER-HARD (10.2X18.5X2.5MM THK)	
	17	1	**2K-4973**	1	LOCKNUT (3/8-16 THD)	
	18	1	**7L-7262**	1	ELBOW-FLARED	
	19	1	**7D-7233**	2	CLIP (SLOT)	
	20	1	**136-0486**	1	HOSE AS	
	21	1	**7X-7958**	2	CLAMP-HOSE	
	22	1	**6V-2492**	1	CONNECTOR	
	23	1	**8M-0755**	1	CONNECTOR	
	24	1	**5P-9299**	1	CLIP	
	25	1	**9N-3666**	1	VALVE AS	
	26	1	**5P-1075**	4	WASHER-HARD (10.2X22.5X3MM THK)	
	27	1	**9M-7961**	1	FITTING	
	28	1	**5S-7379**	1	BOLT (3/8-16X0.875 IN)	
	29	1	**4L-9337**	2	BOLT (3/8-16X1.5 IN)	
	30	1	**5M-3062**	1	BOLT (3/8-16X0.75 IN)	
E	31	1	**8C-3681**		HOSE (217CM)	
	32	1	**7N-1277**	1	BRACKET AS	
		1	**1F-0750**	1	NUT-WELD (3/8-16 THD)	
	33	1	**6V-8801**	2	NUT (3/8-16 THD)	
	34	1	**004-6683**	1	FITTING	
	35	1	**003-9514**	1	COUPLING-PIPE	
	36	1	**119-4290**	1	BRACKET-RH	
E	37	1	**5P-1465**	2	HOSE (79CM EACH)	
E	38	1	**5P-1465**		HOSE (127CM)	

E-ORDER BY THE CENTIMETER

125-5457 **TANK GP-WATER** ***(contd.)*** **i01740447**

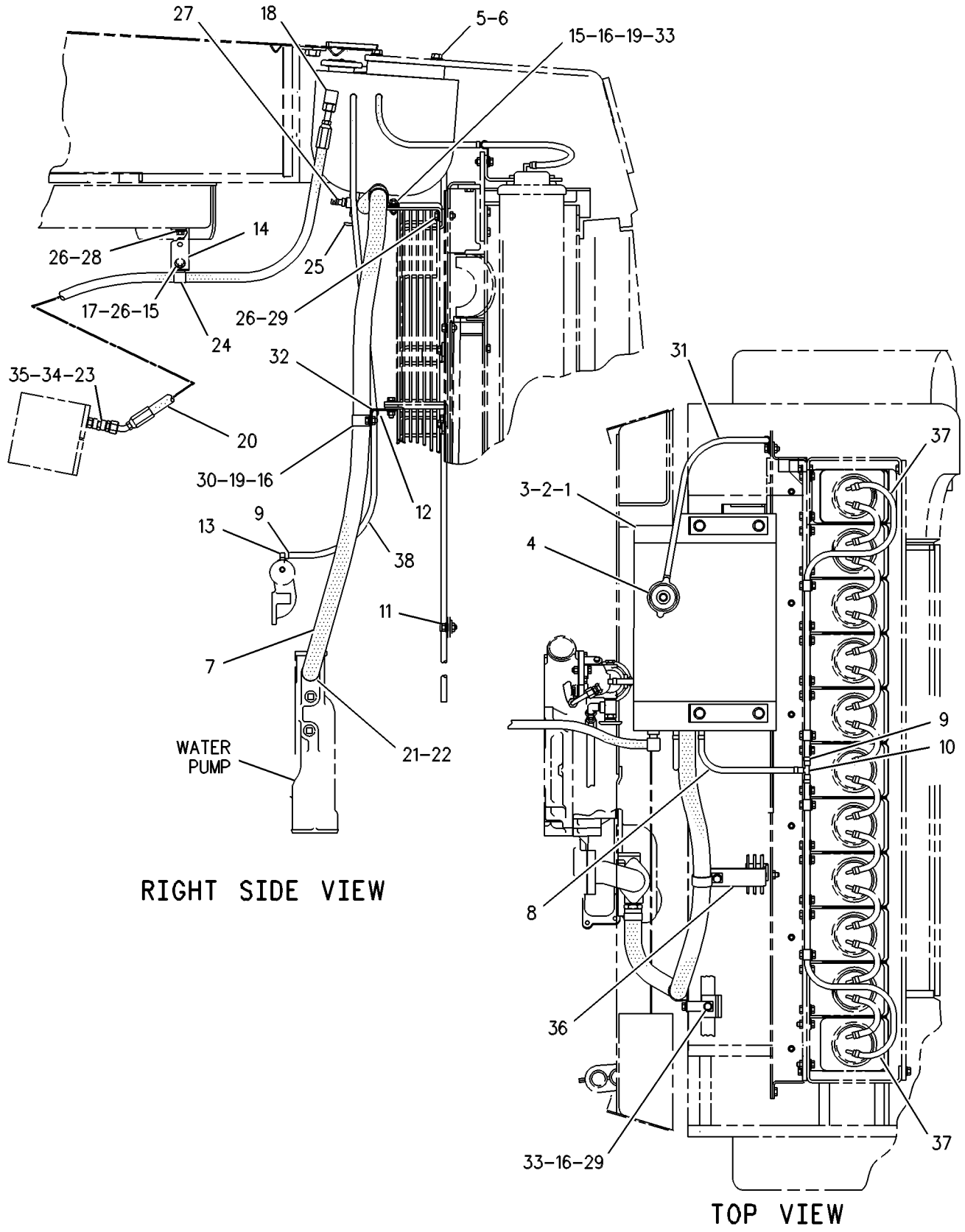

GRAPHIC #1 g00346447

COOLING SYSTEM

125-5457 TANK GP-WATER

S/N: 3KR1045-UP

SMCS-1377 **i01740448**

NOTE	REF NO	GRAPHIC REF	PART NUMBER	QTY	PART NAME 1 2 3 4 5 6 (PRODUCT LEVEL)	SEE PAGE
CY	1	1	*159-1966*	1	TANK GP-COOLANT	183
	2	1	**9Y-9236**	1	BODY AS-GAUGE	
	3	1	**7M-8485**	1	SEAL-O-RING	
E	4	1	**5P-1465**		HOSE (127CM)	
C	5	1	**5P-2566**	3	BOLT (1/2-13X1.5 IN)	
C	6	1	**8T-4223**	3	WASHER-HARD (13.5X25.5X3MM THK)	
E	7	1	**5P-1251**		HOSE (197CM)	
E	8	1	**5P-1465**		HOSE (40CM)	
C	9	1	**1P-4278**	10	CLAMP-HOSE	
	10	1	**192-5425**	1	TEE	
	11	1	**8M-2770**	2	CLIP	
	12	1	**4D-9517**	6	CLIP	
	13	1	**2V-4868**	1	FITTING (1/8-27 PTF)	
	14	1	**9G-0150**	1	BRACKET	
	15	1	**4L-6454**	3	BOLT (3/8-16X1 IN)	
	16	1	**8T-4896**	7	WASHER-HARD (10.2X18.5X2.5MM THK)	
	17	1	**2K-4973**	1	LOCKNUT (3/8-16 THD)	
	18	1	**7L-7262**	1	ELBOW-FLARED	
	19	1	**7D-7233**	2	CLIP (SLOT)	
	20	1	**136-0486**	1	HOSE AS	
	21	1	**7X-7958**	2	CLAMP-HOSE	
	22	1	**6V-2492**	1	CONNECTOR	
	23	1	**8M-0755**	1	CONNECTOR	
	24	1	**5P-9299**	1	CLIP	
	25	1	**9N-3666**	1	VALVE AS	
	26	1	**5P-1075**	4	WASHER-HARD (10.2X22.5X3MM THK)	
	27	1	**9M-7961**	1	FITTING	
	28	1	**5S-7379**	1	BOLT (3/8-16X0.875 IN)	
	29	1	**4L-9337**	2	BOLT (3/8-16X1.5 IN)	
	30	1	**5M-3062**	1	BOLT (3/8-16X0.75 IN)	
E	31	1	**8C-3681**		HOSE (217CM)	
	32	1	**7N-1277**	1	BRACKET AS	
		1	**1F-0750**	1	NUT-WELD (3/8-16 THD)	
	33	1	**6V-8801**	3	NUT (3/8-16 THD)	
	34	1	**004-6683**	1	FITTING	
	35	1	**003-9514**	1	COUPLING-PIPE	
	36	1	**119-4290**	1	BRACKET-RH	
E	37	1	**5P-1465**	2	HOSE (79CM EACH)	
C	38	1	**3J-7354**	2	SEAL-O-RING	
C		1	**6V-1355**	2	ELBOW	
	39	1	**3B-1915**	1	BOLT (3/8-16X1.37 IN)	
	40	1	**5M-2894**	1	WASHER-HARD (10.2X18.5X2.5MM THK)	
	41	1	**6S-9720**	1	BRACKET	

C-CHANGE FROM PREVIOUS TYPE
E-ORDER BY THE CENTIMETER
Y-SEPARATE ILLUSTRATION

125-5457 **TANK GP-WATER** ***(contd.)*** **i01740448**

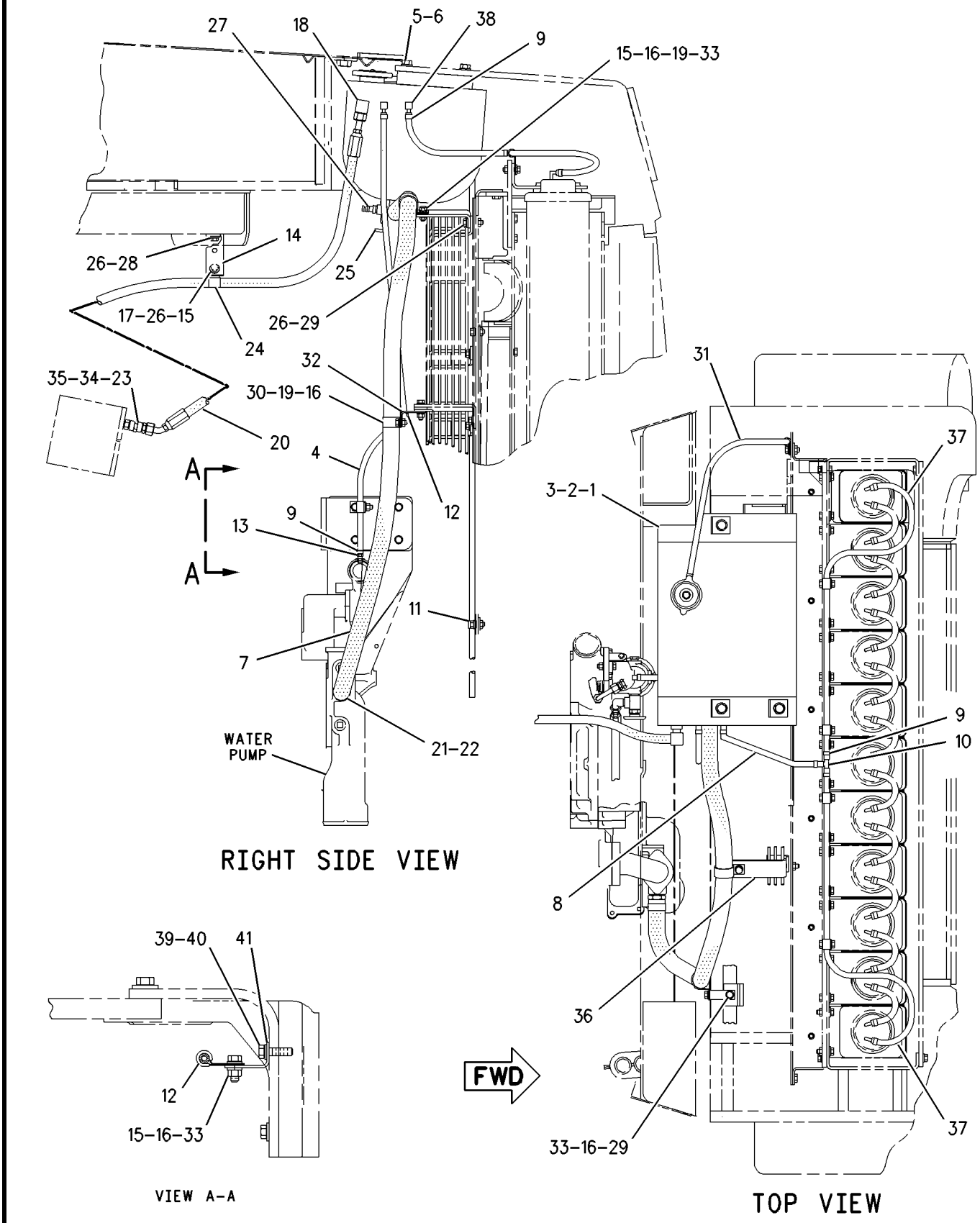

GRAPHIC #1 g00797621

COOLING SYSTEM

133-6441 TANK GP-WATER

S/N: 3KR1-UP
PART OF 133-6442 COLD WEATHER AR
AN ATTACHMENT
TYPE 1

SMCS-1377 **i01740474**

NOTE	REF NO	GRAPHIC REF	PART NUMBER	QTY	PART NAME 1 2 3 4 5 6 (PRODUCT LEVEL)	SEE PAGE
	1	1	**125-5458**	1	TANK AS	
		1	**6B-8692**	1	BOSS	
		1	**8N-8846**	1	NECK-FILLER	
	2	1	**9Y-9236**	1	BODY AS-GAUGE	
	3	1	**7M-8485**	1	SEAL-O-RING	
	4	1	**031-1119**	1	CAP AS-RADIATOR	
	5	1	**5P-2566**	4	BOLT (1/2-13X1.5 IN)	
	6	1	**8T-4223**	4	WASHER-HARD (13.5X25.5X3MM THK)	
E	7	1	**5P-1251**		HOSE (197CM)	
E	8	1	**5P-1465**		HOSE (127CM)	
	9	1	**1P-4278**	8	CLAMP-HOSE	
	10	1	**192-5425**	1	TEE	
	11	1	**8M-2770**	2	CLIP	
	12	1	**4D-9517**	5	CLIP	
	13	1	**119-4290**	1	BRACKET-RH	
	14	1	**9G-0150**	1	BRACKET	
	15	1	**4L-6454**	2	BOLT (3/8-16X1 IN)	
	16	1	**8T-4896**	5	WASHER-HARD (10.2X18.5X2.5MM THK)	
	17	1	**2K-4973**	1	LOCKNUT (3/8-16 THD)	
	18	1	**7L-7262**	1	ELBOW-FLARED	
	19	1	**7D-7233**	2	CLIP	
	20	1	**136-0486**	1	HOSE AS	
	21	1	**7X-7958**	2	CLAMP-HOSE	
	22	1	**6V-2492**	1	CONNECTOR	
	23	1	**8M-0755**	1	CONNECTOR	
	24	1	**5P-9299**	1	CLIP	
	25	1	**9N-3666**	1	VALVE AS (WATER TANK DRAIN)	
	26	1	**5P-1075**	4	WASHER-HARD (10.2X22.5X3MM THK)	
	27	1	**9M-7961**	1	FITTING	
	28	1	**5S-7379**	1	BOLT (3/8-16X0.875 IN)	
	29	1	**4L-9337**	2	BOLT (3/8-16X1.5 IN)	
	30	1	**5M-3062**	1	BOLT (3/8-16X0.75 IN)	
E	31	1	**8C-3681**		HOSE (217CM)	
	32	1	**7N-1277**	1	BRACKET AS	
		1	**1F-0750**	1	NUT-WELD (3/8-16 THD)	
	33	1	**6V-8801**	2	NUT (3/8-16 THD)	
	34	1	**004-6683**	1	FITTING	
	35	1	**003-9514**	1	COUPLING-PIPE	
E	36	1	**5P-1465**	2	HOSE (79CM EACH)	
E	37	1	**5P-1465**		HOSE (40CM)	

E-ORDER BY THE CENTIMETER

133-6441 **TANK GP-WATER** *(contd.)* **i01740474**

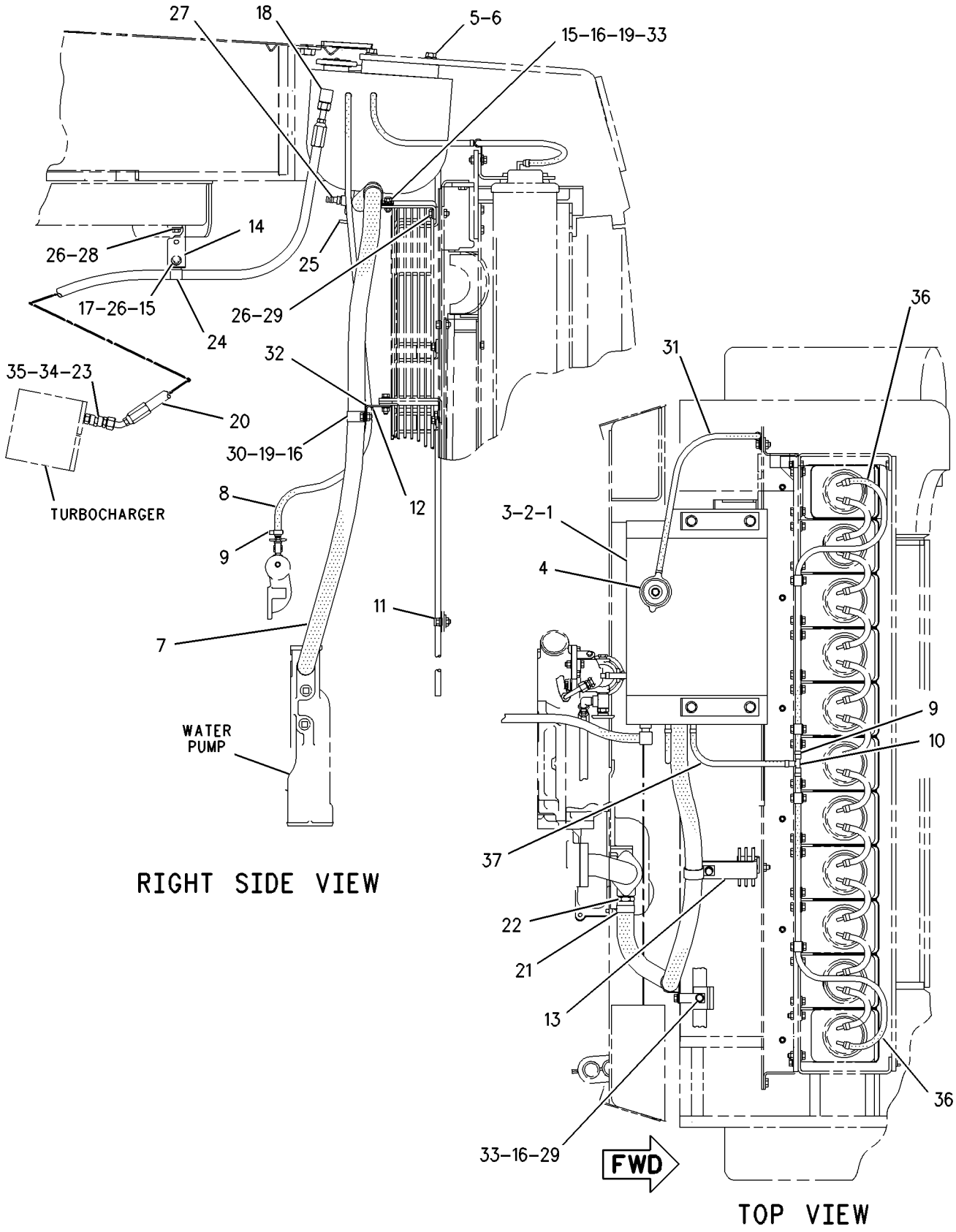

GRAPHIC #1 g00772091

COOLING SYSTEM

133-6441 TANK GP-WATER

S/N: 3KR1-UP
PART OF 133-6442 COLD WEATHER AR
AN ATTACHMENT
TYPE 2

SMCS-1377 **i01740475**

NOTE	REF NO	GRAPHIC REF	PART NUMBER	QTY	PART NAME 1 2 3 4 5 6 (PRODUCT LEVEL)	SEE PAGE
CY	1	1	*159-1966*	1	TANK GP-COOLANT	183
	2	1	**9Y-9236**	1	BODY AS-GAUGE	
	3	1	**7M-8485**	1	SEAL-O-RING	
C	4	1	**3J-7354**	2	SEAL-O-RING	
C	5	1	**5P-2566**	3	BOLT (1/2-13X1.5 IN)	
C	6	1	**8T-4223**	3	WASHER-HARD (13.5X25.5X3MM THK)	
E	7	1	**5P-1251**		HOSE (197CM)	
E	8	1	**5P-1465**		HOSE (127CM)	
C	9	1	**1P-4278**	10	CLAMP-HOSE	
	10	1	**192-5425**	1	TEE	
	11	1	**8M-2770**	2	CLIP	
	12	1	**4D-9517**	5	CLIP	
	13	1	**119-4290**	1	BRACKET-RH	
	14	1	**9G-0150**	1	BRACKET	
	15	1	**4L-6454**	2	BOLT (3/8-16X1 IN)	
	16	1	**8T-4896**	5	WASHER-HARD (10.2X18.5X2.5MM THK)	
	17	1	**2K-4973**	1	LOCKNUT (3/8-16 THD)	
	18	1	**7L-7262**	1	ELBOW-FLARED	
	19	1	**7D-7233**	2	CLIP	
	20	1	**136-0486**	1	HOSE AS	
	21	1	**7X-7958**	2	CLAMP-HOSE	
	22	1	**6V-2492**	1	CONNECTOR	
	23	1	**8M-0755**	1	CONNECTOR	
	24	1	**5P-9299**	1	CLIP	
	25	1	**9N-3666**	1	VALVE AS (WATER TANK DRAIN)	
	26	1	**5P-1075**	4	WASHER-HARD (10.2X22.5X3MM THK)	
	27	1	**9M-7961**	1	FITTING	
	28	1	**5S-7379**	1	BOLT (3/8-16X0.875 IN)	
	29	1	**4L-9337**	2	BOLT (3/8-16X1.5 IN)	
	30	1	**5M-3062**	1	BOLT (3/8-16X0.75 IN)	
E	31	1	**8C-3681**		HOSE (217CM)	
	32	1	**7N-1277**	1	BRACKET AS	
		1	**1F-0750**	1	NUT-WELD (3/8-16 THD)	
	33	1	**6V-8801**	2	NUT (3/8-16 THD)	
	34	1	**004-6683**	1	FITTING	
	35	1	**003-9514**	1	COUPLING-PIPE	
E	36	1	**5P-1465**	2	HOSE (79CM EACH)	
CE	37	1	**5P-1465**		HOSE (35CM)	
C	38	1	**6V-1355**	2	ELBOW	

C-CHANGE FROM PREVIOUS TYPE
E-ORDER BY THE CENTIMETER
Y-SEPARATE ILLUSTRATION

133-6441 **TANK GP-WATER** ***(contd.)*** **i01740475**

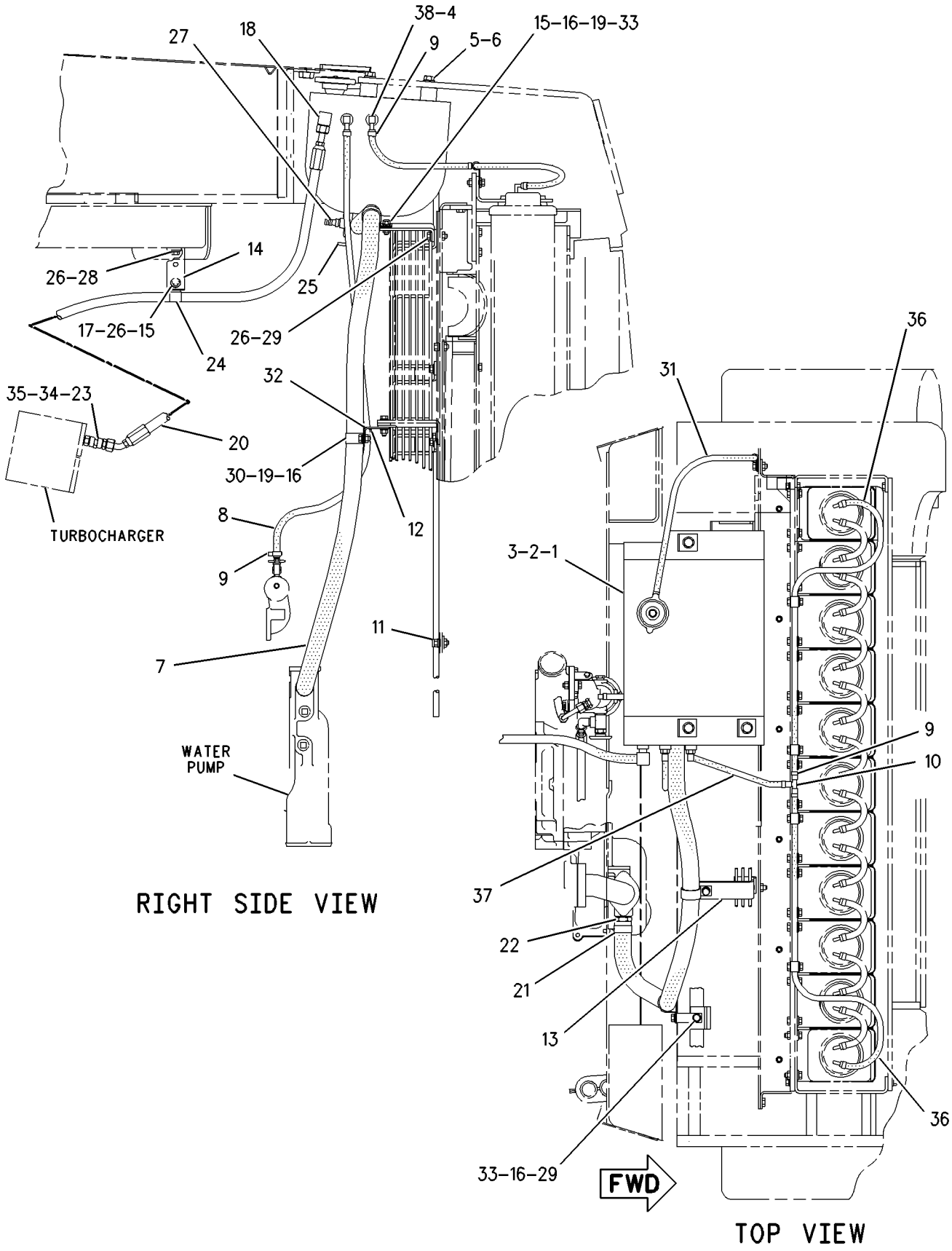

GRAPHIC #1 g00772007

AIR INLET AND EXHAUST SYSTEM

128-2313 AFTERCOOLER GP-WATER

S/N: 80M1-UP

PART OF 115-7641, 135-7810, 155-0058 ENGINE AR

ALSO AN ATTACHMENT

SMCS-1063, 1064, 1079 **i01740541**

NOTE	REF NO	GRAPHIC REF	PART NUMBER	QTY	PART NAME 1 2 3 4 5 6 (PRODUCT LEVEL)	SEE PAGE
	1	1	**1D-4706**	2	BOLT (3/8-16X6 IN)	
					(LOCATION Z)	
	2	1	**0S-1590**	4	BOLT (3/8-16X2 IN)	
					(LOCATION Y)	
	3	1	**1W-5381**	1	COVER-AFTERCOOLER	
	4	1	**7C-3386**	1	CORE AS-AFTERCOOLER	
	5	1	**2W-6687**	2	ADAPTER-AFTERCOOLER	
	6	1	**8N-2299**	2	ADAPTER-AFTERCOOLER	
	7	1	**109-0079**	2	SEAL-O-RING	
	8	1	**109-0073**	4	SEAL-O-RING	
	9	1	**4N-2564**	1	GASKET-AFTERCOOLER	
	10	1	**0T-0573**	14	BOLT (3/8-16X2.75 IN)	
	11	1	**5M-2894**	37	WASHER-HARD (10.2X18.5X2.5MM THK)	
	12	1	**7W-6492**	3	PLUG-PIPE	
	13	1	**8N-2705**	1	HOUSING-AFTERCOOLER	
	14	1	**1B-7182**	7	BOLT (5/16-18X1.25 IN)	
	15	1	**9M-1974**	8	WASHER-HARD (8.8X16X2MM THK)	
	16	1	**0S-1617**	1	BOLT (5/16-18X0.75 IN)	
	17	1	**4N-8628**	1	GASKET	
	18	1	**0S-1571**	17	BOLT (3/8-16X1.75 IN)	
					(LOCATION X)	

128-2313 **AFTERCOOLER GP-WATER** *(contd.)* **i01740541**

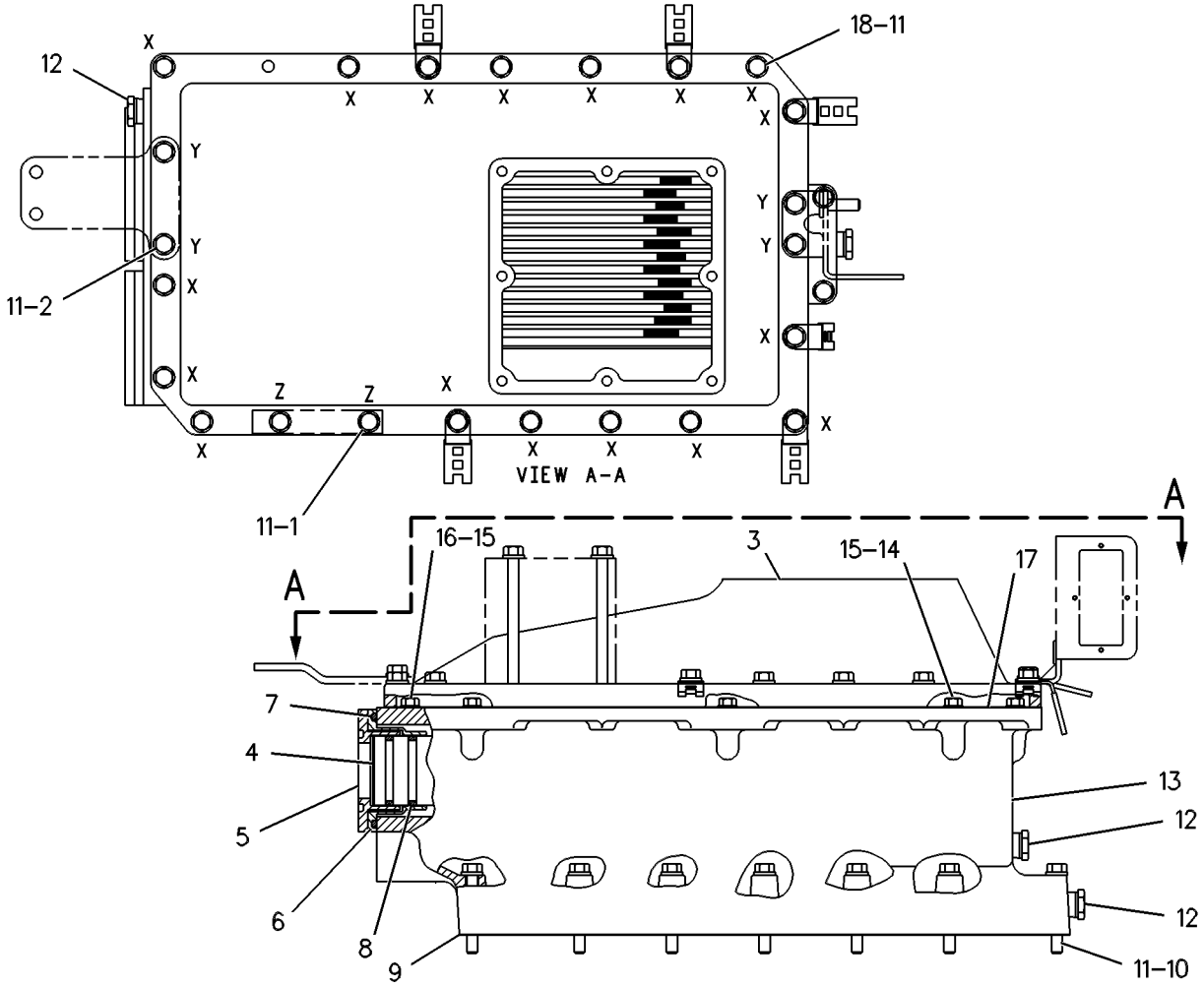

GRAPHIC #1 g00086490

AIR INLET AND EXHAUST SYSTEM

7W-2872 AIR CLEANER GP

S/N: 3KR1-UP

SMCS-1051, 1054 **i00594997**

NOTE	REF NO	GRAPHIC REF	PART NUMBER	QTY	PART NAME 1 2 3 4 5 6 (PRODUCT LEVEL)	SEE PAGE
	1	1	**7W-9749**	1	BODY AS-PRECLEANER	
	2	1	**3E-7447**	4	CLAMP-HOSE	
	3	1	**6N-3356**	1	HOSE-HUMP	
	4	1	**2P-2508**	1	HOOD AS-PRECLEANER	
	5	1	**5M-6687**	10	STUD-TAPERLOCK	
	6	1	**2K-4973**	10	LOCKNUT (3/8-16 THD)	
CY	7	1	**106-3968**	1	AIR CLEANER GP	196
	8	1	**7C-9770**	1	GASKET	
	9	1	**0S-0509**	4	BOLT (3/8-16X.75IN)	
C	10	1	**5P-1075**	14	WASHER-HARD (3MM THK)	

C-CHANGE FROM PREVIOUS TYPE
Y-SEPARATE ILLUSTRATION

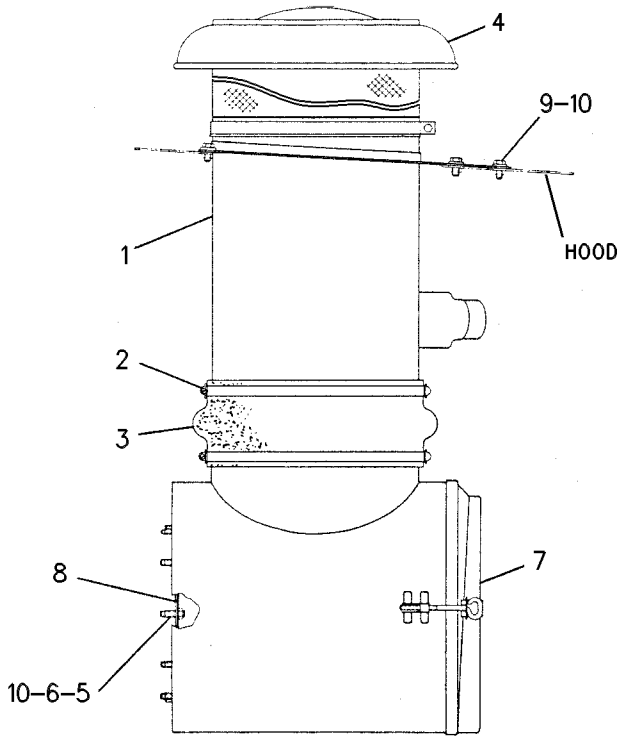

GRAPHIC #1 g00251231

AIR INLET AND EXHAUST SYSTEM

8Q-1996 AIR CLEANER GP

S/N: 3KR1-UP
PART OF 130-3859 WASTE HANDLING AR
AN ATTACHMENT

SMCS-1051, 1054 **i00690614**

NOTE	REF NO	GRAPHIC REF	PART NUMBER	QTY	PART NAME 1 2 3 4 5 6 (PRODUCT LEVEL)	SEE PAGE
	1	1	**7W-9749**	1	BODY AS-PRECLEANER	
	2	1	**6N-3356**	1	HOSE-HUMP	
	3	1	**5M-6687**	10	STUD-TAPERLOCK	
	4	1	**2K-4973**	10	LOCKNUT (3/8-16 THD)	
Y	5	1	**106-3968**	1	AIR CLEANER GP	196
	6	1	**7C-9770**	1	GASKET	
	7	1	**0S-0509**	4	BOLT (3/8-16X.75IN)	
	8	1	**5P-1075**	14	WASHER-HARD (3MM THK)	
	9	1	**8Q-1997**	1	PRESCREENER AS	
	10	1	**3E-7447**	2	CLAMP-HOSE	
	11	1	**9S-6558**	1	STACK AS-AIR	

Y-SEPARATE ILLUSTRATION

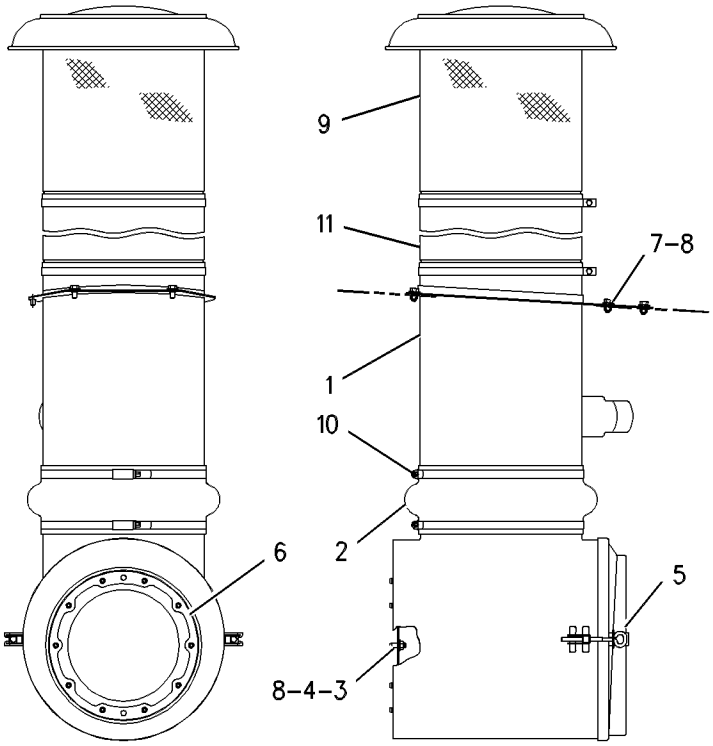

GRAPHIC #1 g00284366

AIR INLET AND EXHAUST SYSTEM

106-3968 AIR CLEANER GP

S/N: 3KR1-UP
PART OF 7W-2872, 8Q-1996 AIR CLEANER GP
ALSO AN ATTACHMENT

SMCS-1051, 1054 **i00594584**

NOTE	REF NO	GRAPHIC REF	PART NUMBER	QTY	PART NAME 1 2 3 4 5 6 (PRODUCT LEVEL)	SEE PAGE
	1	1	**106-3969**	1	ELEMENT AS-PRIMARY	
	2	1	**106-3973**	1	ELEMENT AS-SECONDARY	
	3	1	**7C-0190**	1	COVER AS	
	4	1	**9M-3695**	2	ROD AS	

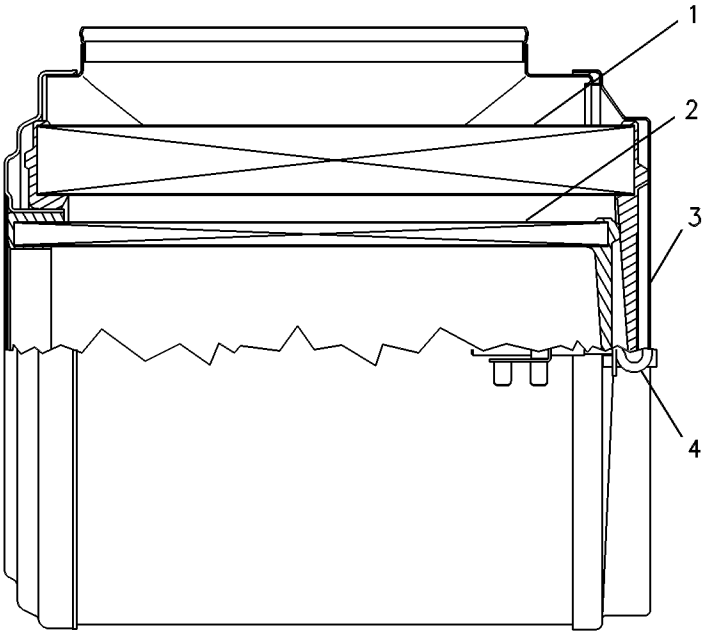

GRAPHIC #1 g00086118

AIR INLET AND EXHAUST SYSTEM

7W-9380 DUST EJECTOR GP

S/N: 3KR1-UP

SMCS-1068 **i01400799**

NOTE	REF NO	GRAPHIC REF	PART NUMBER	QTY	PART NAME 1 2 3 4 5 6 (PRODUCT LEVEL)	SEE PAGE
	1	1	**7S-5003**	1	CAP AS-RAIN	
	2	1	**4W-4949**	1	EJECTOR AS-EXHAUST	
C	3	1	**7W-1208**	1	CLAMP	
	4	1	**5P-4868**	2	CLAMP (HOSE)	
	5	1	**7W-9381**	1	HOSE	
C	6	1	**0T-0065**	1	BOLT (3/8-16X3.5 IN)	
C		1	**1B-5355**	1	NUT-FULL (3/8-16THD)	
C		1	**5M-2894**	2	WASHER-HARD (10.2X18.5X2.5MM THK)	
	7	1	**0S-1594**	2	BOLT (3/8-16X1 IN)	
	8	1	**7W-2478**	1	GASKET	
	9	1	**7W-9379**	1	ELBOW	

C-CHANGE FROM PREVIOUS TYPE

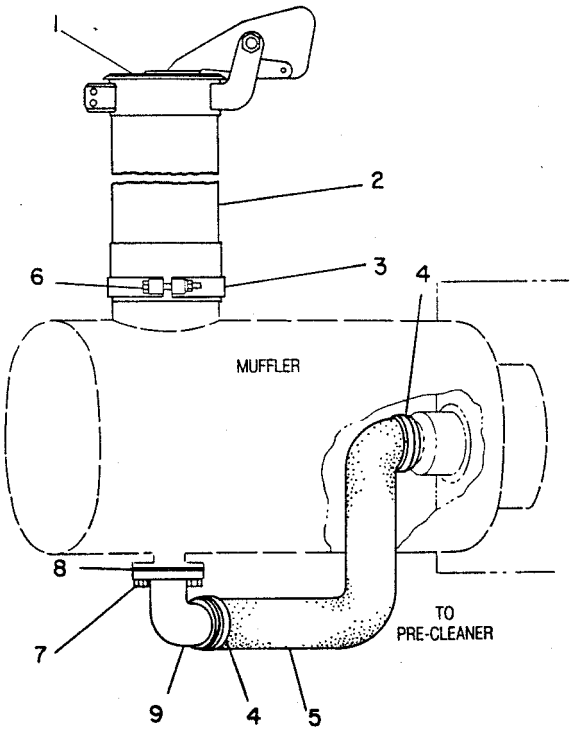

GRAPHIC #1 g00194208

AIR INLET AND EXHAUST SYSTEM

150-0316 KIT-INSTALLATION

S/N: 3KR1-UP
TURBINE PRECLEANER
FIELD INSTALLATION

SMCS-1051 **i01442511**

NOTE	REF NO	GRAPHIC REF	PART NUMBER	QTY	PART NAME 1 2 3 4 5 6 (PRODUCT LEVEL)	SEE PAGE
	1	1	**8T-4896**	2	WASHER-HARD (10.2X18.5X2.5MM THK)	
	2	1	**9B-7237**	4	BOLT (3/8-16X1.25 IN)	
	3	1	**4W-5596**	1	COVER	
	4	1	**5P-1075**	4	WASHER-HARD (10.2X22.5X3MM THK)	
	5	1	**7W-2478**	1	GASKET	
	6	1	**8T-2502**	2	BOLT (3/8-16X1.125 IN)	

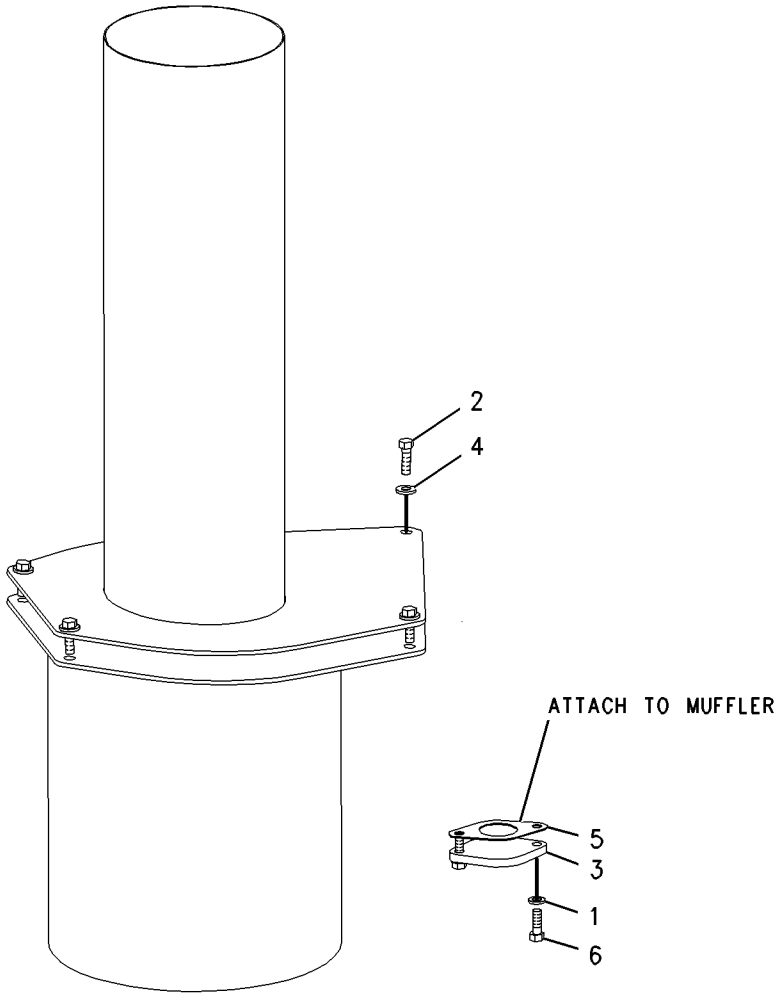

GRAPHIC #1 g00798338

MEMORANDA

AIR INLET AND EXHAUST SYSTEM

127-6993 LINES GP-AIR

S/N: 80M1-UP

PART OF 115-7641, 135-7810, 155-0058 ENGINE AR

ALSO AN ATTACHMENT

SMCS-1058 **i01740544**

NOTE	REF NO	GRAPHIC REF	PART NUMBER	QTY	PART NAME 1 2 3 4 5 6 (PRODUCT LEVEL)	SEE PAGE
	1	1	**7E-3205**	1	MANIFOLD-INLET	
	2	1	**3E-7428**	2	PLUG-PIPE	
	3	1	**8N-0879**	4	CLAMP	
	4	1	**7W-1096**	1	SUPPORT-TURBOCHARGER	
	5	1	**121-5459**	1	TUBE AS-EXHAUST	
	6	1	**121-5461**	1	TUBE AS-EXHAUST	
	7	1	**8N-0878**	2	CLAMP	
	8	1	**1W-0481**	2	RING-EXHAUST SEAL	
	9	1	**106-9408**	2	SEAL-EXHAUST	
	10	1	**121-5455**	1	TUBE AS-EXHAUST	
	11	1	**121-5457**	1	TUBE AS-EXHAUST	
	12	1	**174-3998**	1	SUPPORT-AIR CLEANER	
	13	1	**1A-2029**	7	BOLT (3/8-16X1.125 IN)	
	14	1	**0S-1591**	2	BOLT (3/8-16X1.5 IN)	
	15	1	**5M-2894**	13	WASHER-HARD (10.2X18.5X2.5MM THK)	
	16	1	**174-0677**	1	BRACKET	
	17	1	**8N-2258**	1	SHIELD AS-BOTTOM	
		1	**6V-5044**	7	NUT-WELD (5/16-18 THD)	
		1	**9M-4136**	5	SPACER	
	18	1	**1W-6186**	1	SHIELD AS	
		1	**6V-5044**	2	NUT-WELD (5/16-18 THD)	
	19	1	**9M-1974**	2	WASHER-HARD (8.8X16X2MM THK)	
	20	1	**5P-9959**	2	BOLT (5/16-18X0.5 IN)	
	21	1	**8N-2574**	1	BRACKET	
	22	1	**0S-1594**	2	BOLT (3/8-16X1 IN)	
	23	1	**129-9417**	1	GASKET	
	24	1	**1W-5380**	1	ADAPTER	
	25	1	**7W-5919**	1	ELBOW-OUTLET	
	26	1	**4L-8337**	2	SEAL-O-RING	
	27	1	**7W-1944**	1	RETAINER	
	28	1	**0S-0509**	2	BOLT (3/8-16X0.75 IN)	
	29	1	**5S-1188**	2	SEAL-O-RING	
	30	1	**5P-2755**	4	BOLT-HIGH TEMPERATURE (3/8-16X2.75 IN)	
	31	1	**8T-6765**	2	PLUG-PIPE	
	32	1	**3B-1915**	7	BOLT (3/8-16X1.37 IN)	
	33	1	**0S-1590**	2	BOLT (3/8-16X2 IN)	
	34	1	**7W-3145**	1	PLATE	

127-6993 **LINES GP-AIR** *(contd.)* **i01740544**

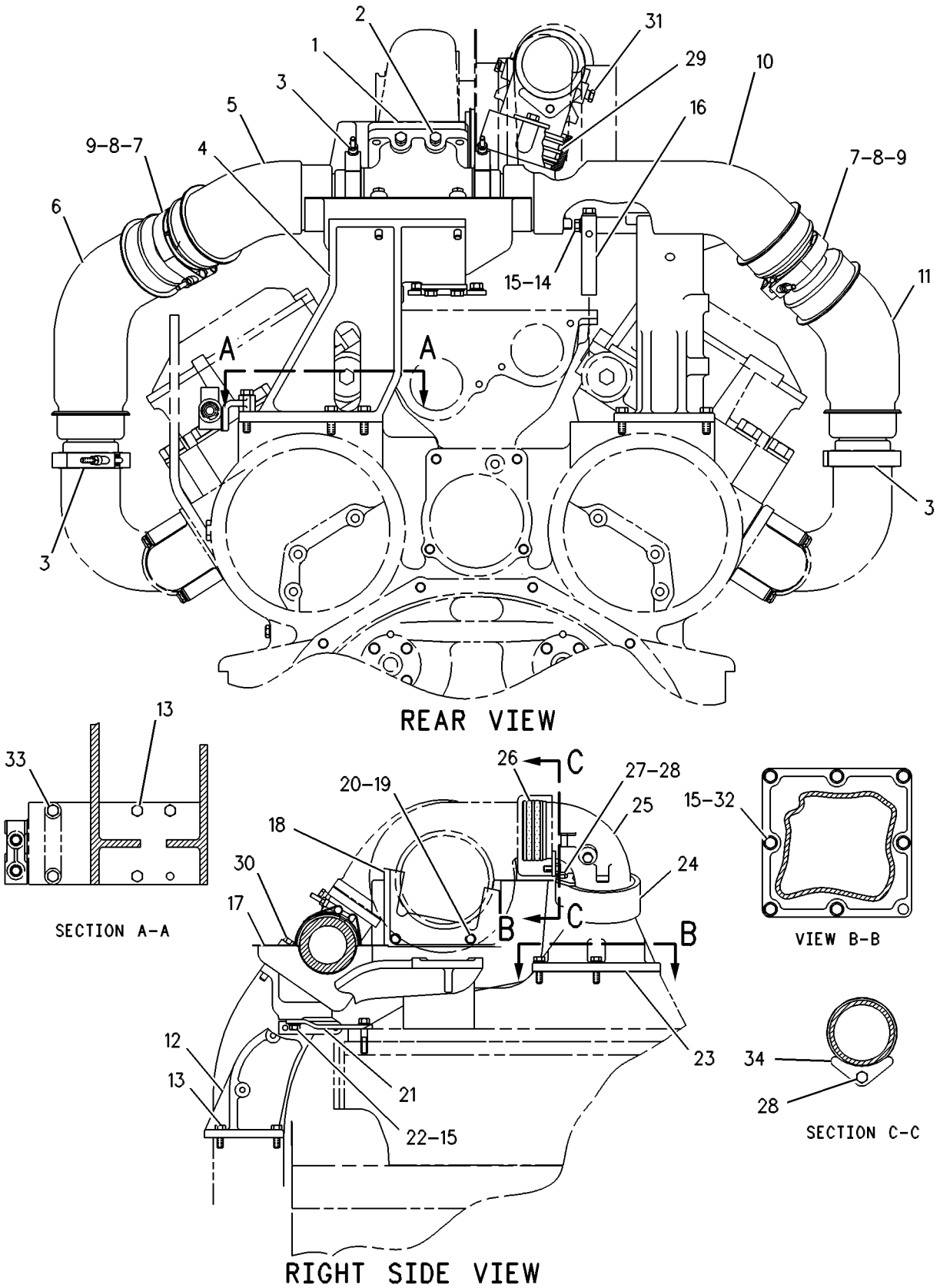

GRAPHIC #1 g00269154

AIR INLET AND EXHAUST SYSTEM

130-2596 LINES GP-AIR

S/N: 3KR1-1313

SMCS-1058 **i01400801**

NOTE	REF NO	GRAPHIC REF	PART NUMBER	QTY	PART NAME 1 2 3 4 5 6 (PRODUCT LEVEL)	SEE PAGE
Y	1	1	**103-6093**	1	SENSOR GP-PRESSURE	455
	2	1	**9X-0263**	1	ADAPTER	
	3	1	**2M-5173**	4	SEAL-O-RING (126.36MM ID)	
	4	1	**3J-7354**	1	SEAL-O-RING (8.92MM ID)	
	5	1	**9B-7237**	2	BOLT (3/8-16X1.25 IN)	
	6	1	**8N-2745**	1	CLAMP	
	7	1	**8N-2729**	1	RING-METAL SEAL	
	8	1	**8N-2730**	1	RING-METAL SEAL	
	9	1	**2W-6967**	1	ELBOW AS	
	10	1	**2W-6965**	1	COUPLING	
	11	1	**1W-6694**	1	CLAMP	
	12	1	**8N-9961**	1	ELBOW-EXHAUST	
	13	1	**9M-1869**	1	PIPE-AIR TRANSFER	
	14	1	**4P-5969**	1	SUPPORT AS	
		1	**7M-1674**	1	ELEMENT-FILTER	
	15	1	**5S-7383**	2	BOLT (3/8-16X1.75 IN)	
	16	1	**6V-8801**	2	NUT (3/8-16 THD)	
	17	1	**3B-6552**	1	ELBOW (90 DEGREES)	

Y-SEPARATE ILLUSTRATION

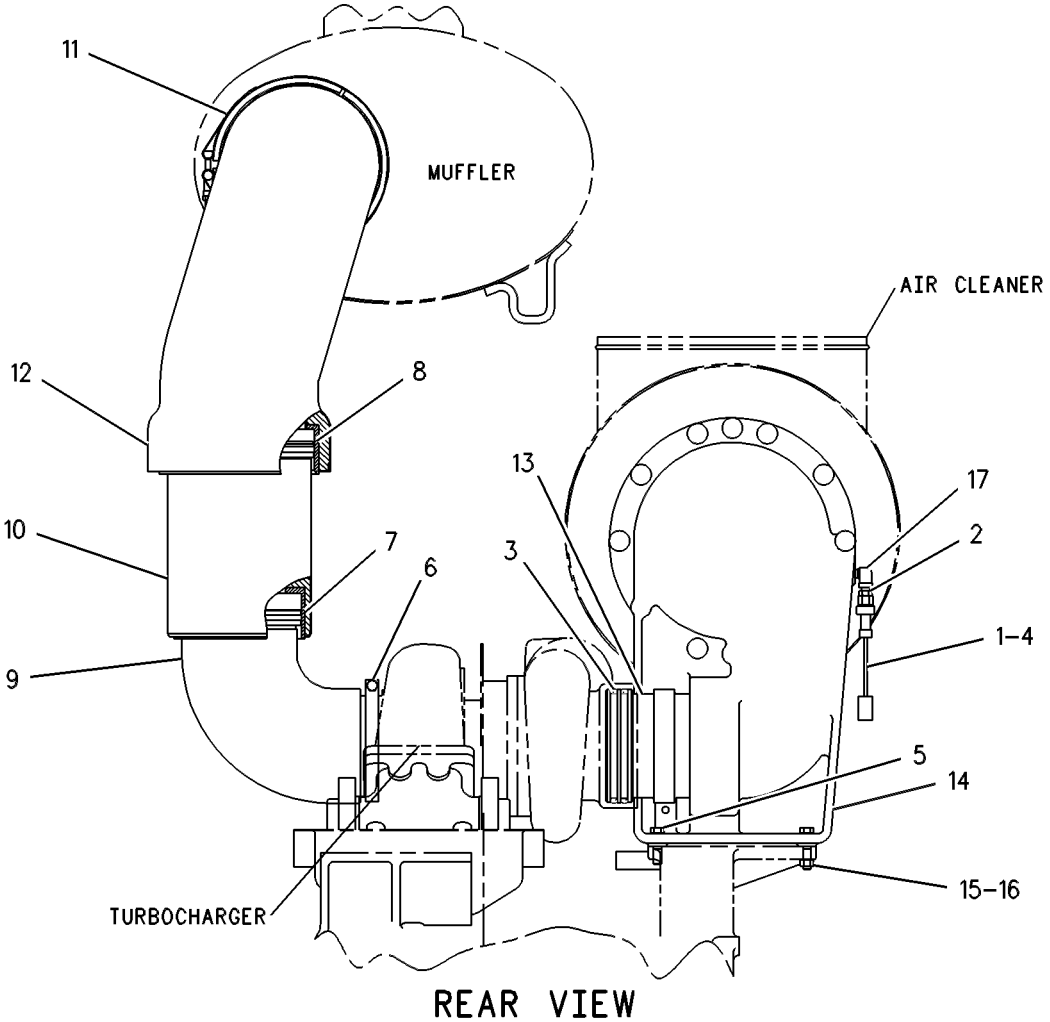

GRAPHIC #1 g00257434

AIR INLET AND EXHAUST SYSTEM

130-2596 LINES GP-AIR

S/N: 3KR1314-UP

SMCS-1058 **i01740552**

NOTE	REF NO	GRAPHIC REF	PART NUMBER	QTY	PART NAME 1 2 3 4 5 6 (PRODUCT LEVEL)	SEE PAGE
CY	1	1	**161-9926**	1	SENSOR GP-PRESSURE (TURBO INLET)	457
	2	1	**9X-0263**	1	ADAPTER	
	3	1	**2M-5173**	4	SEAL-O-RING	
	4	1	**3J-7354**	1	SEAL-O-RING	
	5	1	**9B-7237**	2	BOLT (3/8-16X1.25 IN)	
	6	1	**8N-2745**	1	CLAMP	
	7	1	**8N-2729**	1	RING-METAL SEAL	
	8	1	**8N-2730**	1	RING-METAL SEAL	
	9	1	**2W-6967**	1	ELBOW AS	
	10	1	**2W-6965**	1	COUPLING	
	11	1	**1W-6694**	1	CLAMP	
	12	1	**8N-9961**	1	ELBOW-EXHAUST	
	13	1	**9M-1869**	1	PIPE-AIR TRANSFER	
	14	1	**4P-5969**	1	SUPPORT AS	
		1	**7M-1674**	1	ELEMENT-FILTER	
	15	1	**5S-7383**	2	BOLT (3/8-16X1.75 IN)	
	16	1	**6V-8801**	2	NUT (3/8-16 THD)	
	17	1	**3B-6552**	1	ELBOW	

C-CHANGE FROM PREVIOUS TYPE
Y-SEPARATE ILLUSTRATION

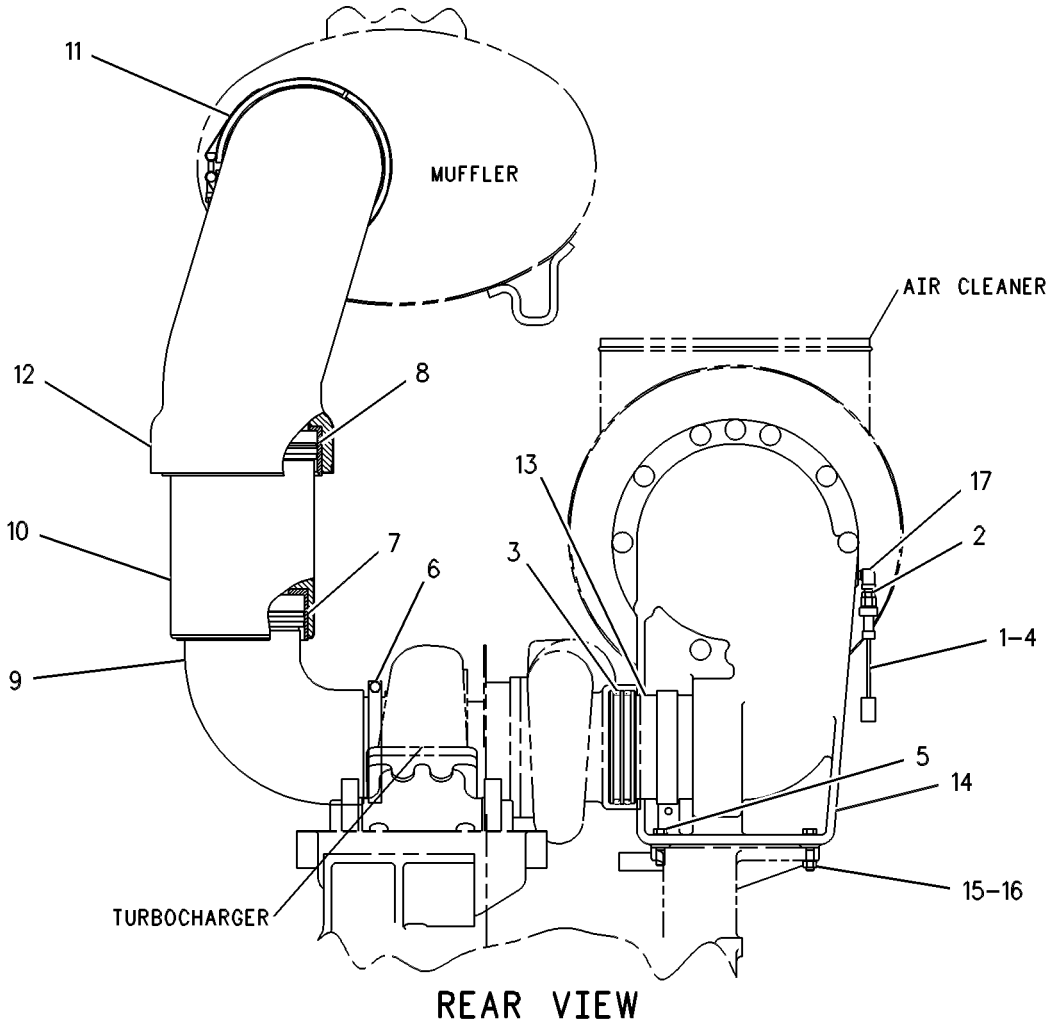

GRAPHIC #1 g00257434

AIR INLET AND EXHAUST SYSTEM

127-5134 MANIFOLD GP-EXHAUST

S/N: 80M1-3509
PART OF 115-7641, 135-7810, 155-0058 ENGINE AR
ALSO AN ATTACHMENT

SMCS-1059 **i00107737**

NOTE	REF NO	GRAPHIC REF	PART NUMBER	QTY	PART NAME 1 2 3 4 5 6 (PRODUCT LEVEL)	SEE PAGE
	1	1	**112-7751**	1	MANIFOLD-EXHAUST (REAR-RH)	
	2	1	**107-8106**	2	MANIFOLD-EXHAUST (END)	
	3	1	**108-3612**	24	SPACER (53MM THK)	
	4	1	**5M-2894**	24	WASHER (2.5MM THK)	
	5	1	**2N-2766**	24	LOCKNUT (3/8-16 NPTF THD)	
	6	1	**112-7750**	1	MANIFOLD-EXHAUST (REAR-LH)	
	7	1	**107-8107**	2	MANIFOLD-EXHAUST (MIDDLE)	
	8	1	**129-9452**	12	GASKET-EXHAUST MANIFOLD	

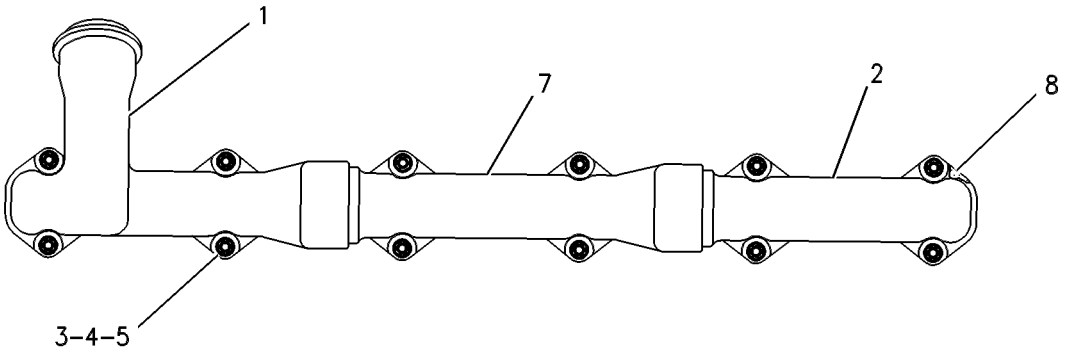

RIGHT SIDE VIEW

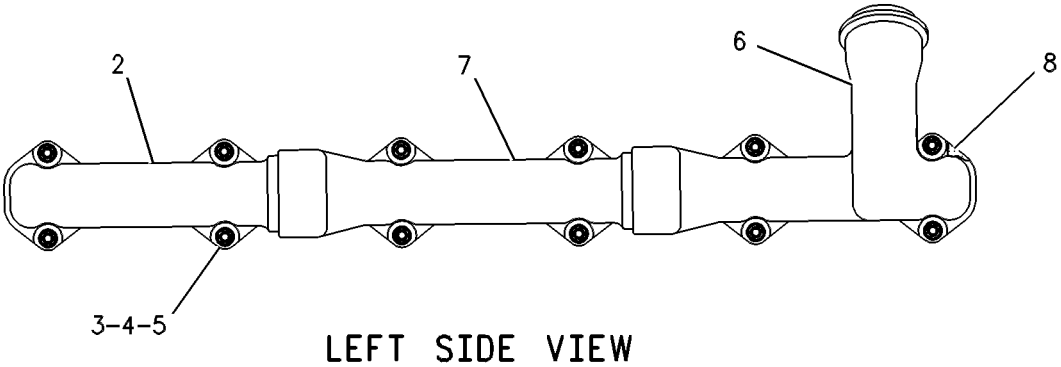

LEFT SIDE VIEW

GRAPHIC #1 g00086486

AIR INLET AND EXHAUST SYSTEM

179-7024 MANIFOLD GP-EXHAUST

S/N: 80M3510-UP
PART OF 115-7641, 135-7810, 155-0058 ENGINE AR
ALSO AN ATTACHMENT

SMCS-1059 **i01291150**

NOTE	REF NO	GRAPHIC REF	PART NUMBER	QTY	PART NAME 1 2 3 4 5 6 (PRODUCT LEVEL)	SEE PAGE
	1	1	**100-7401**	8	SEAL AS-EXHAUST	
	2	1	**108-3612**	24	SPACER (53MM THK)	
	3	1	**112-7750**	1	MANIFOLD-EXHAUST (REAR-LH)	
	4	1	**112-7751**	1	MANIFOLD-EXHAUST (REAR-RH)	
	5	1	**129-9452**	12	GASKET-EXHAUST MANIFOLD	
	6	1	**163-3103**	2	MANIFOLD-EXHAUST	
	7	1	**163-3104**	2	MANIFOLD-EXHAUST	
	8	1	**2N-2766**	24	LOCKNUT (3/8-16 THD)	
	9	1	**5M-2894**	24	WASHER (2.5MM THK)	

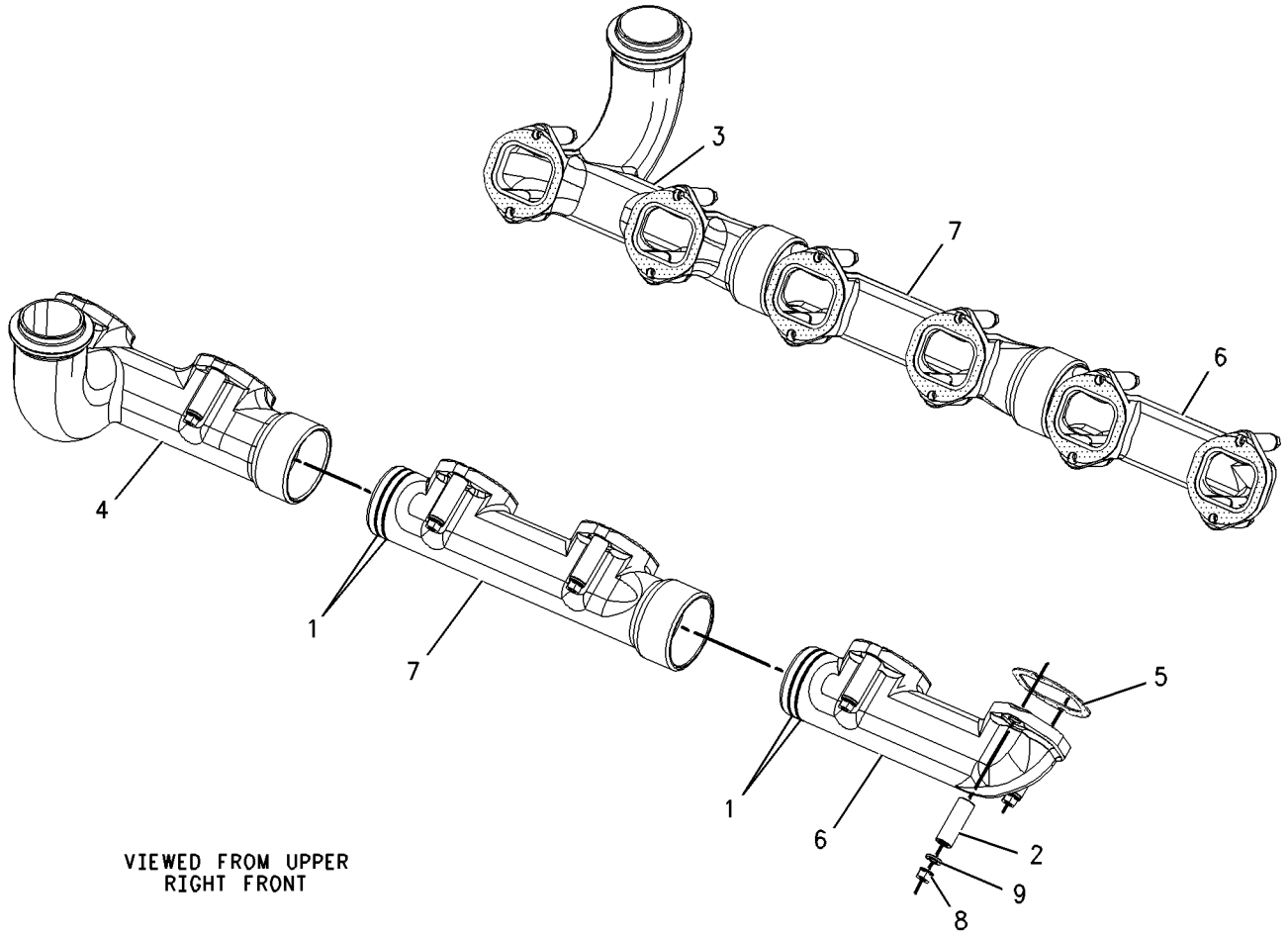

GRAPHIC #1 g00686298

AIR INLET AND EXHAUST SYSTEM

8N-0745 MUFFLER GP

S/N: 3KR1-UP

SMCS-1062 **i01740556**

NOTE	REF NO	GRAPHIC REF	PART NUMBER	QTY	PART NAME 1 2 3 4 5 6 (PRODUCT LEVEL)	SEE PAGE
C	1	1	**7W-5867**	1	MUFFLER AS	
C	2	1	**0S-1587**	3	BOLT (1/2-13X1.75 IN)	
	3	1	**5P-1076**	4	WASHER-HARD (13.5X30X4MM THK)	
C	4	1	**1A-1460**	1	BOLT (1/2-13X2 IN)	
B	5	1	**5P-3931**		COMPOUND-ANTI-SEIZE	

B-USE AS REQUIRED
C-CHANGE FROM PREVIOUS TYPE

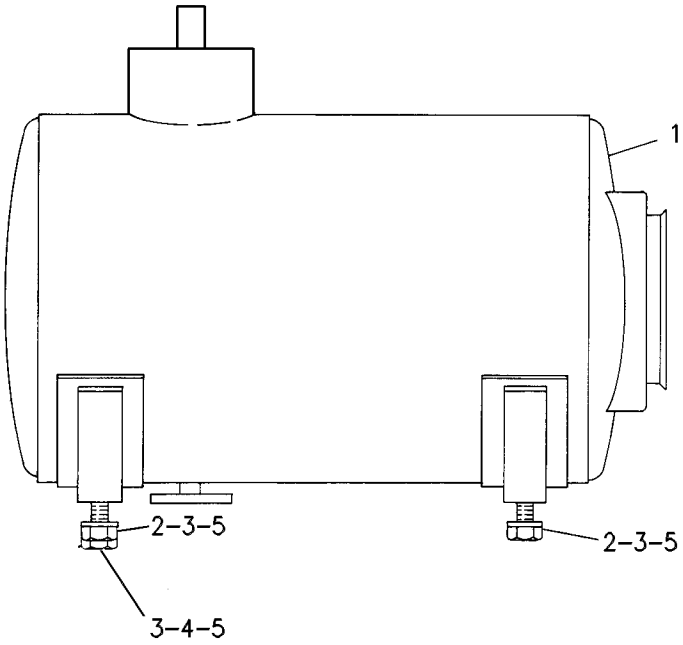

GRAPHIC #1 g00234878

AIR INLET AND EXHAUST SYSTEM

102-4365 PRECLEANER AR

S/N: 3KR839-UP
AN ATTACHMENT

SMCS-1055 **i01740560**

NOTE	REF NO	GRAPHIC REF	PART NUMBER	QTY	PART NAME 1 2 3 4 5 6 (PRODUCT LEVEL)	SEE PAGE
	1	1	**8T-4896**	4	WASHER-HARD (10.2X18.5X2.5MM THK)	
	2	1	**4L-6454**	4	BOLT (3/8-16X1 IN)	
	3	1	**143-1230**	1	PRECLEANER AS	
Y		1	**130-3281**	1	PRECLEANER GP	209
	4	1	**107-5919**	1	PIPE AS	
	5	1	**139-1507**	1	PRESCREEN AS	

Y-SEPARATE ILLUSTRATION

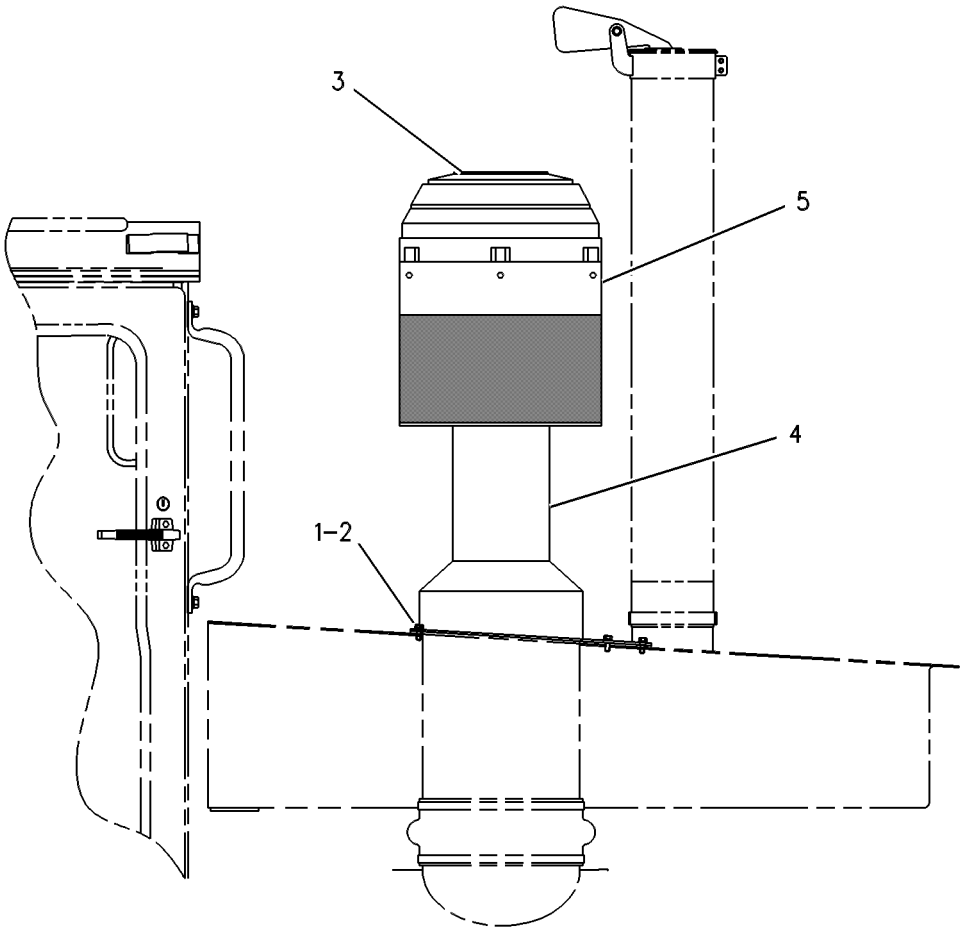

RIGHT SIDE VIEW

GRAPHIC #1 g00276995

AIR INLET AND EXHAUST SYSTEM

102-4366 PRECLEANER AR

S/N: 3KR1-UP

AN ATTACHMENT

SMCS-1055 **i01740585**

NOTE	REF NO	GRAPHIC REF	PART NUMBER	QTY	PART NAME 1 2 3 4 5 6 (PRODUCT LEVEL)	SEE PAGE
	1	1	**5P-1075**	4	WASHER-HARD (10.2X22.5X3MM THK)	
	2	1	**4L-6454**	4	BOLT (3/8-16X1 IN)	
	3	1	**143-1229**	1	PRECLEANER AR	
Y		1	**130-3281**	1	PRECLEANER GP	209
	4	1	**107-5919**	1	PIPE AS	

Y-SEPARATE ILLUSTRATION

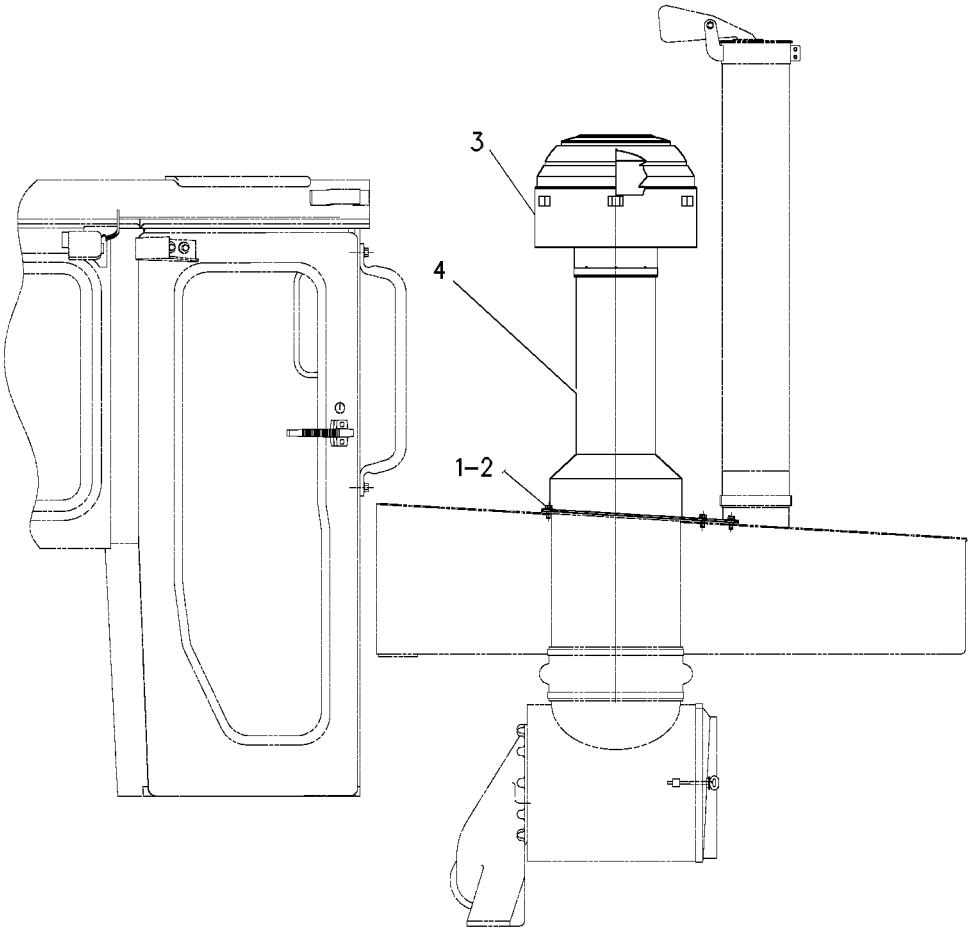

GRAPHIC #1 g00284067

AIR INLET AND EXHAUST SYSTEM

130-3281 PRECLEANER GP

S/N: 3KR1-UP
AIR-TURBINE
PART OF 102-4365, 102-4366 PRECLEANER AR
AN ATTACHMENT

SMCS-1055 **i01508321**

NOTE	REF NO	GRAPHIC REF	PART NUMBER	QTY	PART NAME 1 2 3 4 5 6 (PRODUCT LEVEL)	SEE PAGE
	1	1	**174-4895**	2	CLAMP	

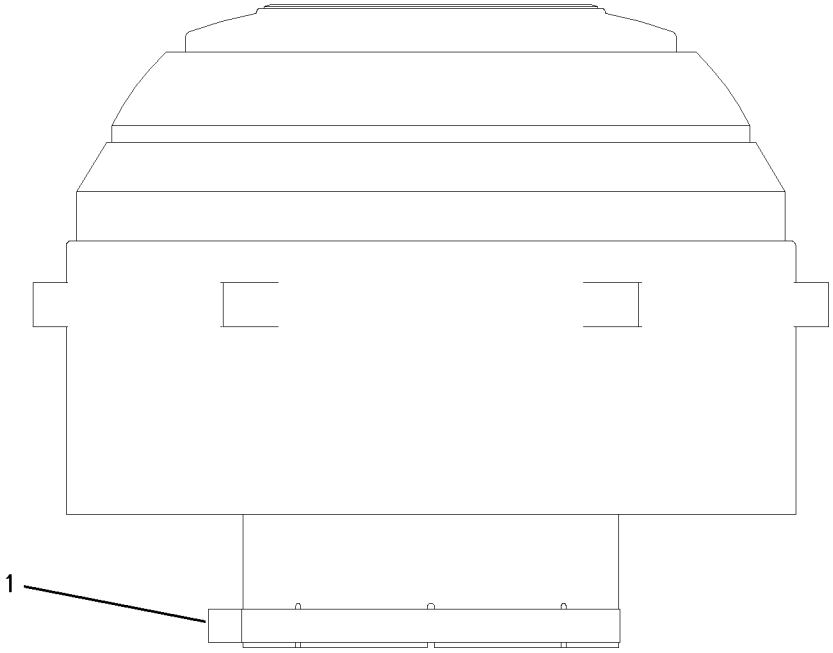

GRAPHIC #1 g00658715

AIR INLET AND EXHAUST SYSTEM

130-9143 SHIELD GP-MANIFOLD

S/N: 3KR1-UP

SMCS-1067 **i01400803**

NOTE	REF NO	GRAPHIC REF	PART NUMBER	QTY	PART NAME 1 2 3 4 5 6 (PRODUCT LEVEL)	SEE PAGE
	1	1	**8N-7954**	2	PLATE	
	2	1	**1C-0569**	9	BOLT (5/16-18X.5 IN)	
	3	1	**3E-4352**	7	WASHER-HARD (8.8X20.5X2.5MM THK)	
	4	1	**126-5056**	1	SHIELD AS-MANIFOLD-LH	
		1	**6V-5044**	6	NUT-WELD (5/16-18 THD)	
	5	1	**5S-0003**	32	NUT (5/16-18 THD)	
	6	1	**9M-1974**	57	WASHER-HARD (8.8X16X2MM THK)	
	7	1	**8N-1594**	2	SHIELD AS	
	8	1	**2H-3755**	23	BOLT (5/16-18X0.62 IN)	
	9	1	**8N-1619**	2	SHIELD AS	
	10	1	**114-0917**	2	SHIELD AS	
	11	1	**1N-3300**	4	SHIELD AS	
	12	1	**8N-2368**	1	SHIELD AS	
	13	1	**0S-1587**	2	BOLT (1/2-13X1.75 IN)	
	14	1	**8N-7953**	1	PLATE	
	15	1	**0S-1594**	9	BOLT (3/8-16X1 IN)	
	16	1	**6V-2712**	16	STUD	
	17	1	**1W-0467**	1	PLATE	
	18	1	**8T-2502**	1	BOLT (3/8-16X1.125 IN)	
	19	1	**0S-1571**	2	BOLT (3/8-16X1.75 IN)	
	20	1	**9X-6458**	4	WASHER-HARD (10.2X22.5X3MM THK)	
	21	1	**5M-2894**	10	WASHER-HARD (10.2X18.5X2.5MM THK)	
	22	1	**8T-4896**	1	WASHER-HARD (10.2X18.5X2.5MM THK)	
	23	1	**1W-6185**	1	SHIELD AS	
		1	**6V-5044**	2	NUT-WELD (5/16-18 THD)	
	24	1	**0L-1143**	1	BOLT (3/8-16X2.50IN)	
	25	1	**9S-8752**	1	NUT-FULL (3/8-16 THD)	
	26	1	**2P-0911**	1	ANGLE	
	27	1	**4P-0692**	2	CLAMP AS	
					(EACH INCLUDES)	
		1	**108-1434**	1	GROMMET	
	28	1	**7D-1649**	2	WASHER-HARD (13.5X32X5MM THK)	
	29	1	**0S-1588**	1	BOLT (3/8-16X1.25 IN)	
	30	1	**130-9117**	1	SHIELD AS	
		1	**6V-5044**	7	NUT-WELD (5/16-18 THD)	
	31	1	**110-0040**	2	PLATE	
	32	1	**121-6198**	1	SHIELD AS	
		1	**6V-5044**	10	NUT-WELD (5/16-18 THD)	

130-9143 **SHIELD GP-MANIFOLD** *(contd.)* **i01400803**

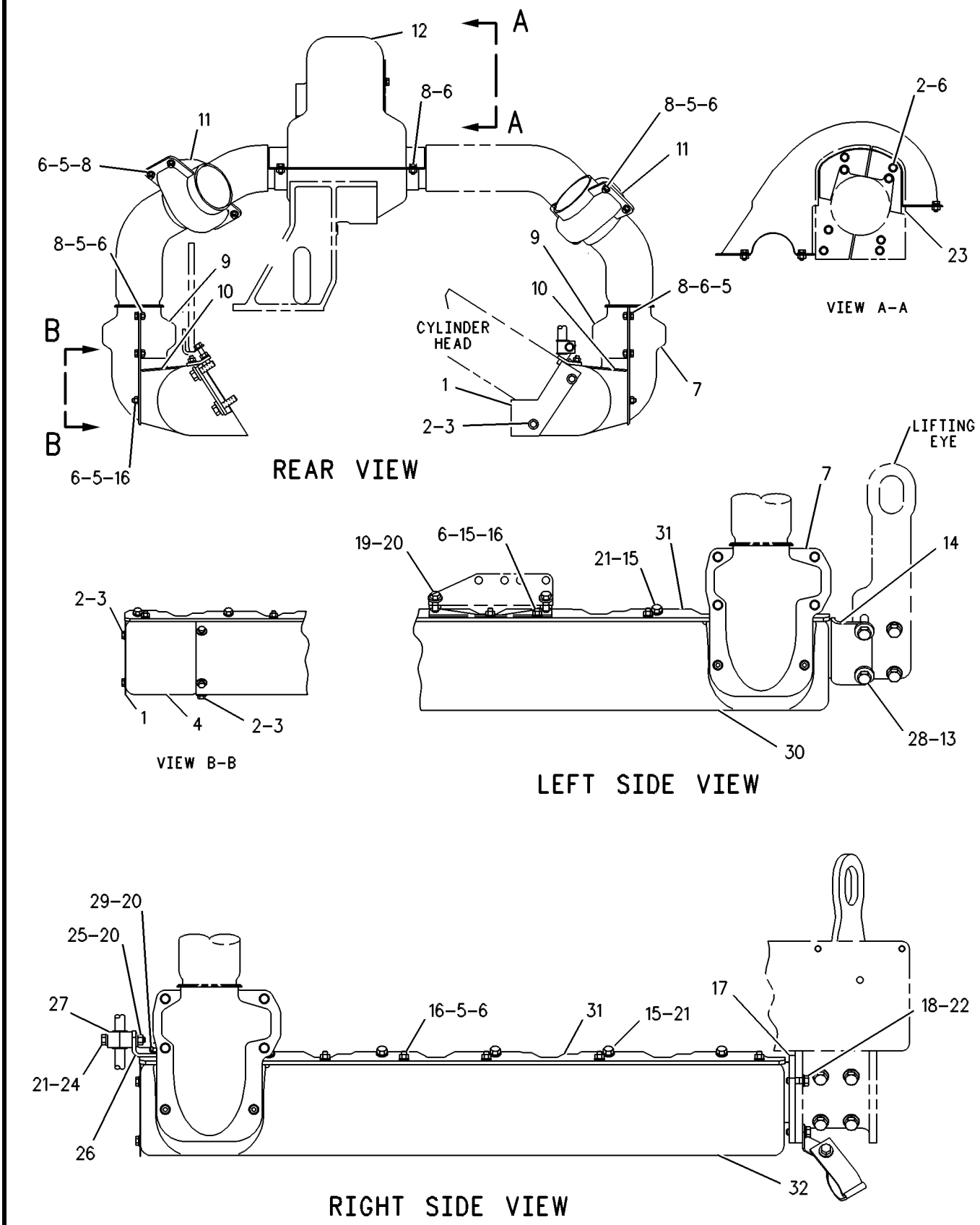

GRAPHIC #1 g00257465

AIR INLET AND EXHAUST SYSTEM

127-6462 TURBOCHARGER GP*R

S/N: 80M1-UP
PART OF 127-9813 TURBOCHARGER GP
ALSO AN ATTACHMENT

SMCS-1052, 1060, 1065, 1077 **i01747318**

NOTE	REF NO	GRAPHIC REF	PART NUMBER	QTY	PART NAME 1 2 3 4 5 6 (PRODUCT LEVEL)	SEE PAGE
	1	1	**127-6465**	1	HOUSING	
	2	1	**0S-1614**	4	BOLT (1/4-20X0.5 IN)	
		1	**5P-0537**	4	WASHER-HARD (7.2X14.5X2MM THK)	
	3	1	**8N-9104**	1	PLATE (115MM BOTTOM EDGE)	
R	4	1	**135-4487**	1	CARTRIDGE GP-TURBOCHARGER	
	6	1	**8N-9103**	1	PLATE (71MM BOTTOM EDGE)	
	7	1	**1N-3279**	1	CLAMP AS (COMPRESSOR)	
	8	1	**9N-2038**	1	CLAMP AS (TURBINE)	
	9	1	**127-6467**	1	COVER-COMPRESSOR	

R-REMFG PART MAY BE AVAILABLE

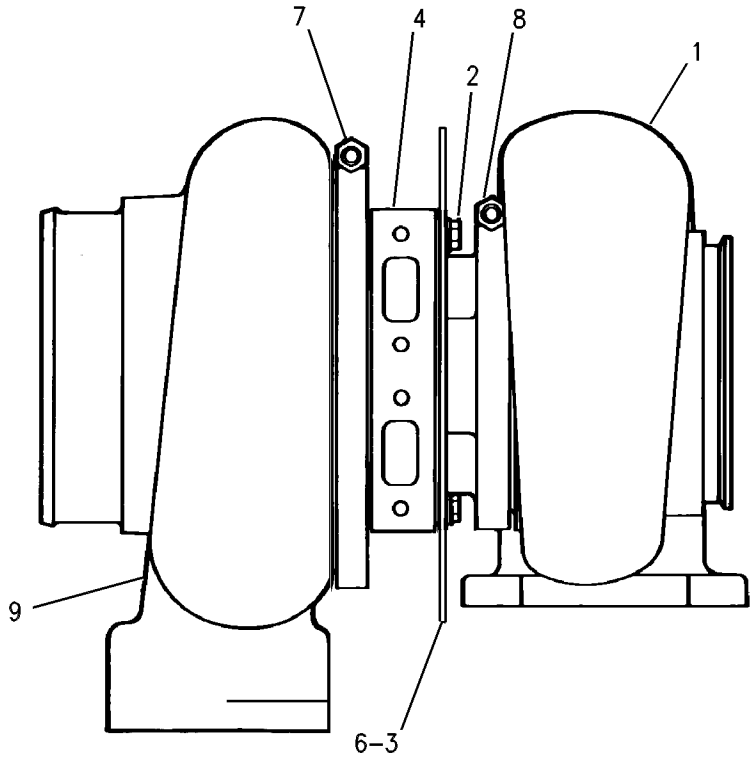

GRAPHIC #1 g00535037

AIR INLET AND EXHAUST SYSTEM

127-9813 TURBOCHARGER GP

S/N: 80M1-UP
PART OF 115-7641, 135-7810, 155-0058 ENGINE AR
ALSO AN ATTACHMENT
TYPE 1

SMCS-1052, 1060, 1065, 1077 **i00601295**

NOTE	REF NO	GRAPHIC REF	PART NUMBER	QTY	PART NAME 1 2 3 4 5 6 (PRODUCT LEVEL)	SEE PAGE
YR	1	1	**127-6462**	1	TURBOCHARGER GP	212
	2	1	**2N-2765**	4	BOLT-HIGH TEMPERATURE	
	3	1	**2N-2766**	4	LOCKNUT (3/8-16 NPTF THD)	
	4	1	**1S-4295**	1	GASKET-TURBOCHARGER	

R-REMFG PART MAY BE AVAILABLE
Y-SEPARATE ILLUSTRATION

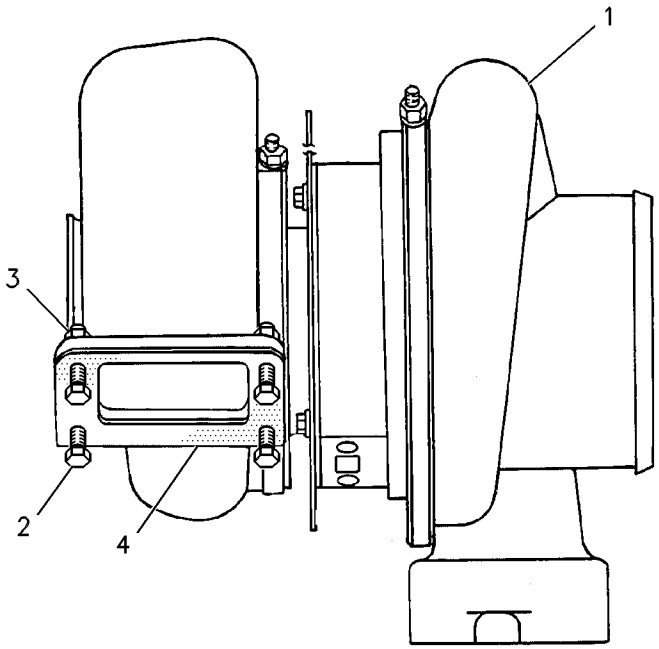

GRAPHIC #1 g00253393

AIR INLET AND EXHAUST SYSTEM

127-9813 TURBOCHARGER GP

S/N: 80M1-UP
PART OF 115-7641, 135-7810, 155-0058 ENGINE AR
ALSO AN ATTACHMENT
TYPE 2

SMCS-1052, 1060, 1065, 1077 **i01119070**

NOTE	REF NO	GRAPHIC REF	PART NUMBER	QTY	PART NAME 1 2 3 4 5 6 (PRODUCT LEVEL)	SEE PAGE
Y	1	1	**164-4610**	1	TURBOCHARGER GP	215
	2	1	**2N-2765**	4	BOLT-HIGH TEMPERATURE (3/8-16X1.75IN)	
	3	1	**2N-2766**	4	LOCKNUT (3/8-16 THD)	
	4	1	**1S-4295**	1	GASKET-TURBOCHARGER	

Y-SEPARATE ILLUSTRATION

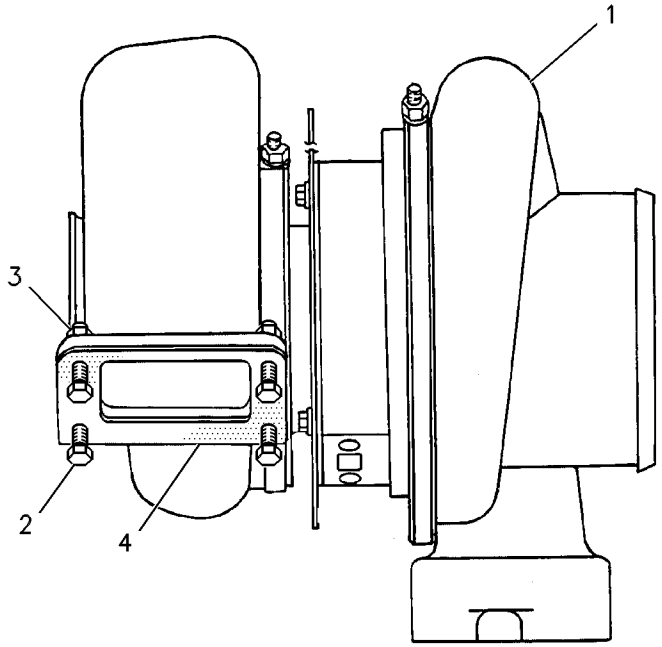

GRAPHIC #1 g00253393

AIR INLET AND EXHAUST SYSTEM

164-4610 TURBOCHARGER GP*R

S/N: 80M1-UP
PART OF 127-9813 TURBOCHARGER GP
ALSO AN ATTACHMENT

SMCS-1052, 1060, 1065, 1077 **i01740682**

NOTE	REF NO	GRAPHIC REF	PART NUMBER	QTY	PART NAME 1 2 3 4 5 6 (PRODUCT LEVEL)	SEE PAGE
	1	1	**127-6465**	1	HOUSING	
	2	1	**0S-1614**	4	BOLT (1/4-20X0.5 IN)	
		1	**5P-0537**	4	WASHER-HARD (7.2X14.5X2MM THK)	
	3	1	**8N-9104**	1	PLATE (115MM BOTTOM EDGE)	
R	4	1	**167-9269**	1	CARTRIDGE GP-TURBOCHARGER	
	6	1	**8N-9103**	1	PLATE (71MM BOTTOM EDGE)	
	7	1	**1N-3279**	1	CLAMP AS (COMPRESSOR)	
	8	1	**9N-2038**	1	CLAMP AS (TURBINE)	
	9	1	**127-6467**	1	COVER-COMPRESSOR	

R-REMFG PART MAY BE AVAILABLE

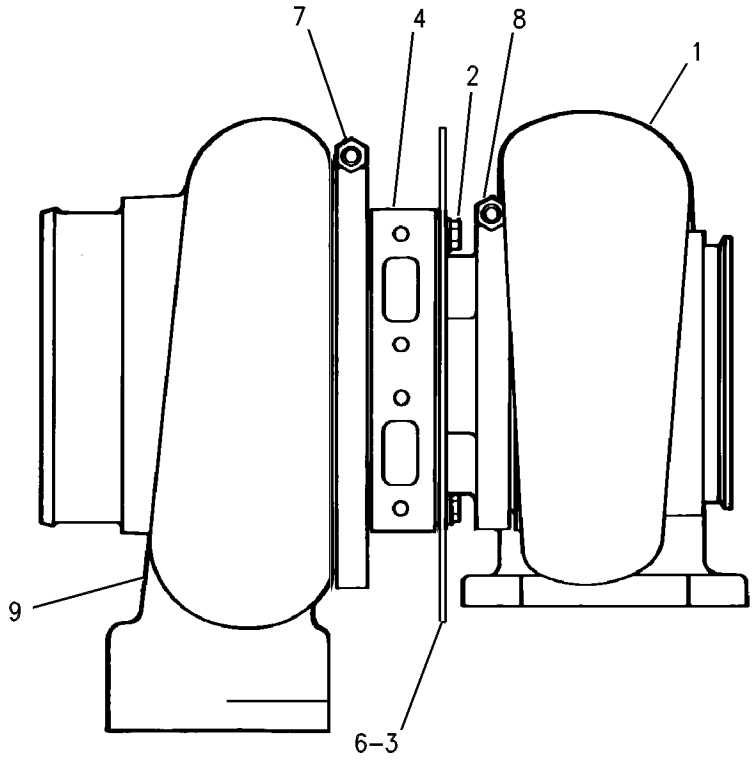

GRAPHIC #1 g00535037

FUEL SYSTEM

103-6283 ADAPTER GP-FAST FILL FUEL

S/N: 3KR1-1560

CANNOT BE USED WITH REAR POWER TRAIN GUARD

AN ATTACHMENT

SMCS-1710 **i01701898**

NOTE	REF NO	GRAPHIC REF	PART NUMBER	QTY	PART NAME 1 2 3 4 5 6 (PRODUCT LEVEL)	SEE PAGE
	1	1	**9D-0630**	1	CAP-DUST	
	2	1	**9G-0371**	1	BLOCK AS	
	3	1	*217-5703*	1	RECEIVER	
I	4	1	**9W-9978**	1	HOSE AS	
		1	**4J-0527**	2	SEAL-O-RING	
	5	1	**8T-8919**	8	BOLT (1/2-13X1.75 IN)	
	6	1	**8T-4223**	12	WASHER-HARD (13.5X25.5X3MM THK)	
	7	1	**1P-4582**	4	FLANGE-HALF	
	8	1	**6V-9273**	1	BALL	
	9	1	**1B-5170**	1	PLUG-PIPE	
	10	1	**7T-2413**	1	SHAFT	
	11	1	**6G-7803**	1	VENT AS	
	12	1	**8T-4994**	4	WASHER-HARD (20X36.5X3.5MM THK)	
		1	**1K-6870**	2	LOCKNUT (3/4-10 THD)	
	13	1	**9W-8100**	1	PLATE	
J	14	1	**8T-8924**	2	BOLT (3/4-10X2.50 IN)	
					—OR—	
L		1	**7X-0375**	2	BOLT (3/4-10X5 IN)	
L		1	**8G-9794**	2	SPACER (22.76X42.16X67MM THK)	
	15	1	**7X-0341**	2	BOLT (1/2-13X7 IN)	
		1	**1K-6872**	2	LOCKNUT (1/2-13 THD)	
	16	1	**101-8909**	1	CAP AS-FUEL TANK FILLER	
		1	**9X-8600**	1	SEAL-O-RING	
		1	**5P-8502**	1	PADLOCK GP	
A		1	**5P-8500**	1	KEY	
A		1	**8Y-6364**	1	SLEEVE	

A-NOT PART OF THIS GROUP
I-SEE HOSE FABRICATION GUIDE
J-FOR DRAWBAR EQUIPPED TRACTORS
L-FOR COUNTERWEIGHT EQUIPPED TRACTORS

103-6283 **ADAPTER GP-FAST FILL FUEL** *(contd.)* **i01701898**

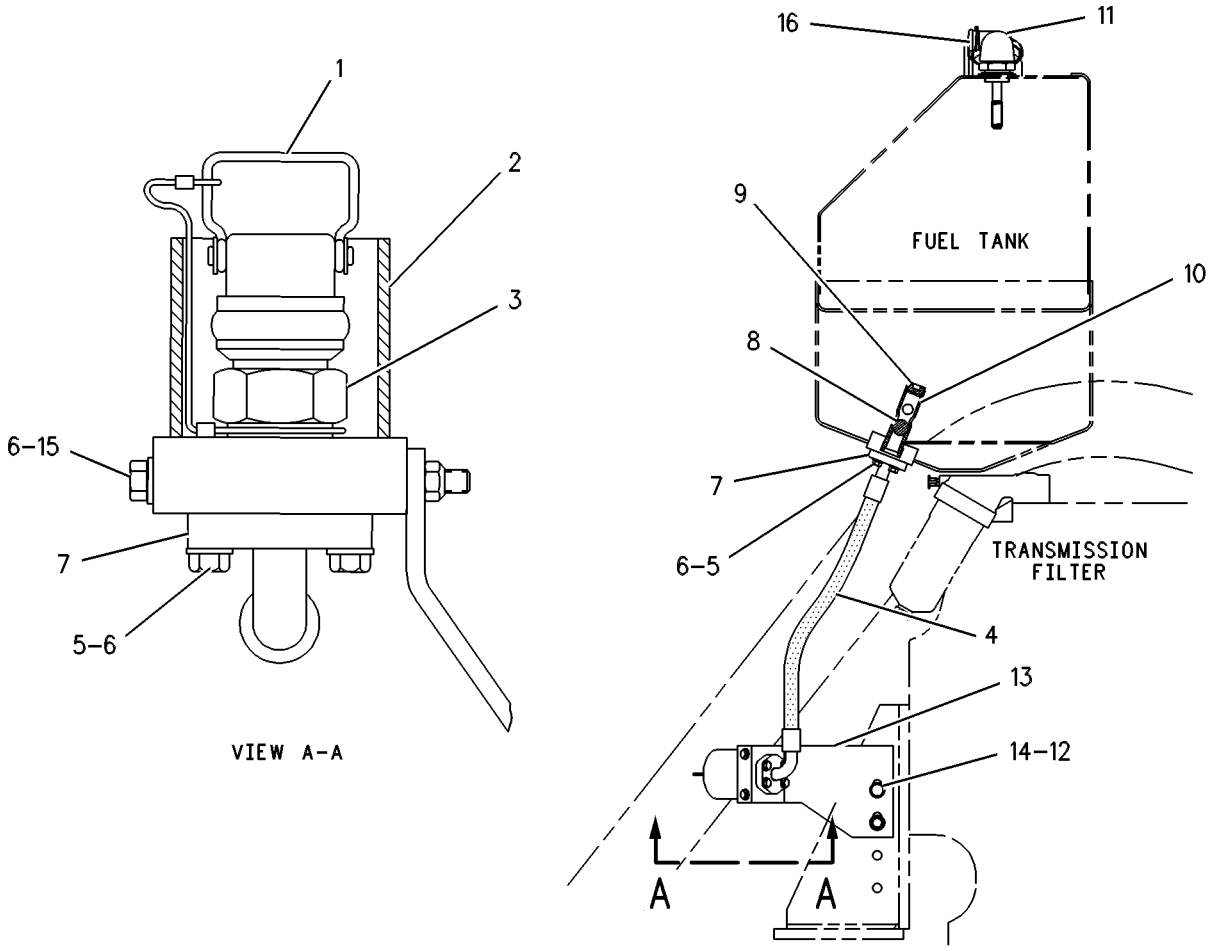

GRAPHIC #1 g00284292

FUEL SYSTEM

126-3938 ADAPTER GP-FAST FILL FUEL

S/N: 3KR1-1566

FOR USE WITH MACHINES EQUIPPED WITH RIPPER

AN ATTACHMENT

SMCS-1710 **i01746961**

NOTE	REF NO	GRAPHIC REF	PART NUMBER	QTY	PART NAME 1 2 3 4 5 6 (PRODUCT LEVEL)	SEE PAGE
I	1	1	**127-4978**	1	HOSE AS	
	2	1	**142-0406**	1	BRACKET AS	
	3	1	**8C-8844**	2	BOLT (1-8X5 IN)	
	4	1	**7X-0340**	2	BOLT (1/2-13X6.5 IN)	
	5	1	**8T-4223**	10	WASHER-HARD (13.5X25.5X3MM THK)	
	6	1	**6V-8801**	1	NUT (3/8-16 THD)	
	7	1	**9D-0630**	1	CAP-DUST	
	8	1	**2G-9000**	1	VALVE AS-TANK (FAST FILL FUEL)	
	9	1	**6Y-0091**	1	BLOCK AS	
	10	1	**6G-7803**	1	VENT AS	
		1	**5T-8645**	1	KIT-VENT	
	11	1	**1B-5170**	1	PLUG-PIPE	
	12	1	**7T-2413**	1	SHAFT	
	13	1	**6V-9273**	1	BALL	
	14	1	**4J-0527**	2	SEAL-O-RING	
	15	1	**1P-4582**	4	FLANGE-HALF	
	16	1	**8T-8919**	8	BOLT (1/2-13X1.75 IN)	
	17	1	**4L-6454**	1	BOLT (3/8-16X1 IN)	
	18	1	**101-8909**	1	CAP AS-FUEL TANK FILLER	
		1	**9X-8600**	1	SEAL-O-RING	
		1	**5P-8502**	1	PADLOCK GP	
A		1	**5P-8500**	1	KEY	
A		1	**8Y-6364**	1	SLEEVE	
	19	1	**6V-2686**	1	CLIP	
	20	1	**8T-4896**	2	WASHER-HARD (10.2X18.5X2.5MM THK)	
	21	1	**4J-8820**	2	SPACER (.375X2.0X1.5IN THK)	
	22	1	**8T-5361**	2	WASHER-HARD (28X49X5MM THK)	

A-NOT PART OF THIS GROUP
I-SEE HOSE FABRICATION GUIDE

126-3938 **ADAPTER GP-FAST FILL FUEL** *(contd.)* **i01746961**

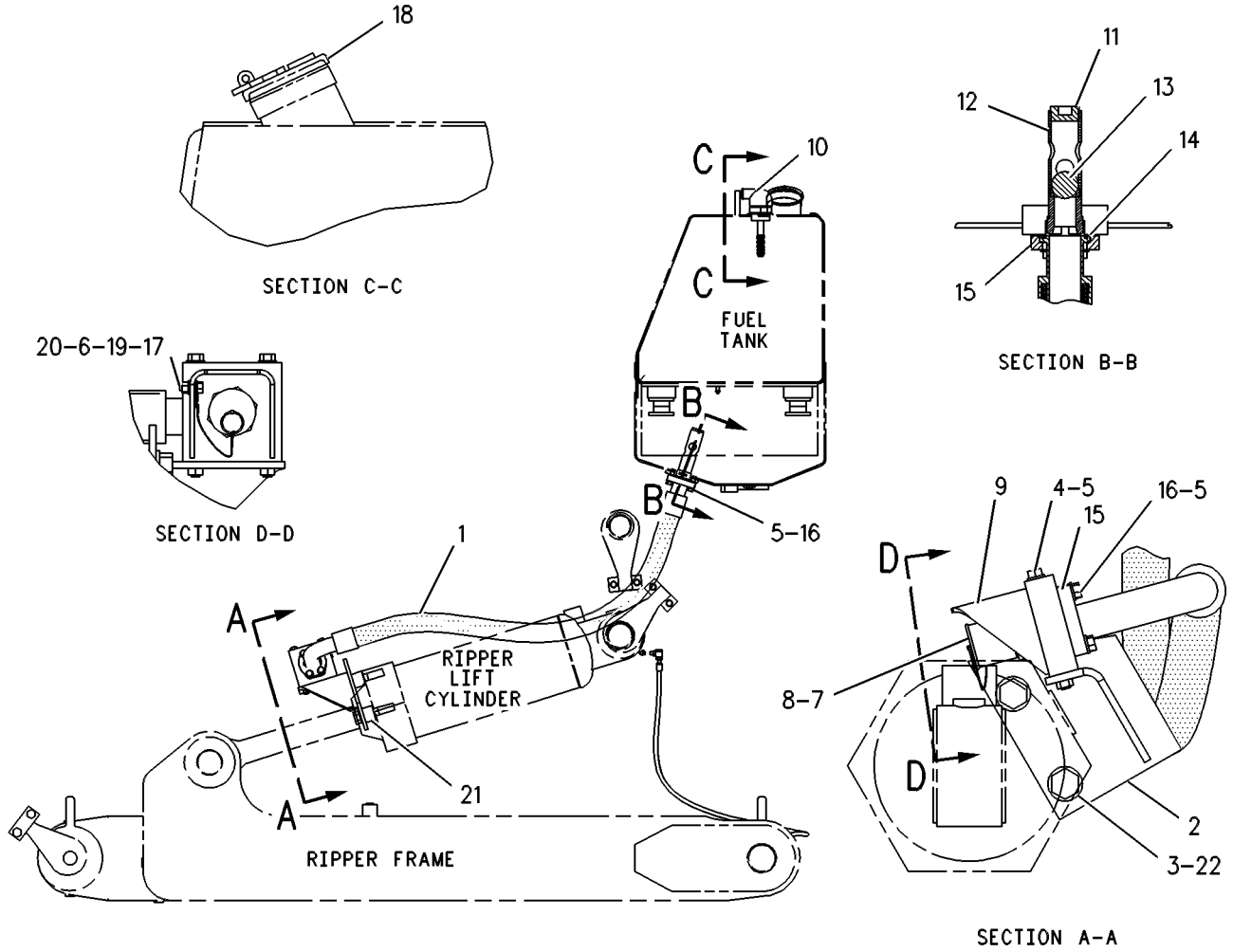

GRAPHIC #1 g00281427

FUEL SYSTEM

174-0049 ADAPTER GP-FAST FILL FUEL

S/N: 3KR1567-UP

FOR USE WITH MACHINES EQUIPPED WITH RIPPER

AN ATTACHMENT

SMCS-1710 **i01666727**

NOTE	REF NO	GRAPHIC REF	PART NUMBER	QTY	PART NAME 1 2 3 4 5 6 (PRODUCT LEVEL)	SEE PAGE
	1	1	**124-2463**	1	ADAPTER GP-FAST FILL FUEL	
	2	1	**4J-8820**	2	SPACER (.375X2.0X1.5IN THK)	
	3	1	**6Y-0091**	1	BLOCK AS	
	4	1	**9D-0630**	1	CAP-DUST	
I	5	1	**127-4978**	1	HOSE AS	
	6	1	**142-0406**	1	BRACKET AS	
		1	**1F-0748**	2	NUT-WELD (1/2-13 THD)	
	7	1	**163-5455**	1	VALVE AS	
	8	1	**188-5095**	1	VENT AS	
	9	1	**174-0050**	1	HOSE AS	
	10	1	**1H-8128**	1	SEAL-O-RING	
	11	1	**1J-9671**	2	SEAL-O-RING	
	12	1	**1P-4582**	4	FLANGE-HALF	
	13	1	**2D-4534**	6	BOLT-SOCKET HEAD (3/8-16X1 IN)	
	14	1	**4J-0527**	2	SEAL-O-RING	
	15	1	**4L-6454**	12	BOLT (3/8-16X1 IN)	
	16	1	**5H-6734**	1	SEAL-O-RING	
	17	1	**5P-2566**	4	BOLT (1/2-13X1.5 IN)	
	18	1	**5P-2618**	2	CONNECTOR	
	19	1	**6V-2686**	1	CLIP	
	20	1	**6V-8801**	1	NUT (3/8-16 THD)	
	21	1	**7X-0340**	2	BOLT (1/2-13X6.5 IN)	
	22	1	**8C-8844**	2	BOLT (1-8X5 IN)	
	23	1	**8T-4223**	12	WASHER-HARD (13.5X25.5X3MM THK)	
	24	1	**8T-4896**	12	WASHER-HARD (10.2X18.5X2.5MM THK)	
	25	1	**8T-5361**	2	WASHER-HARD (28X49X5MM THK)	
	26	1	**8T-8919**	4	BOLT (1/2-13X1.75 IN)	

I-SEE HOSE FABRICATION GUIDE

174-0049 **ADAPTER GP-FAST FILL FUEL** *(contd.)* **i01666727**

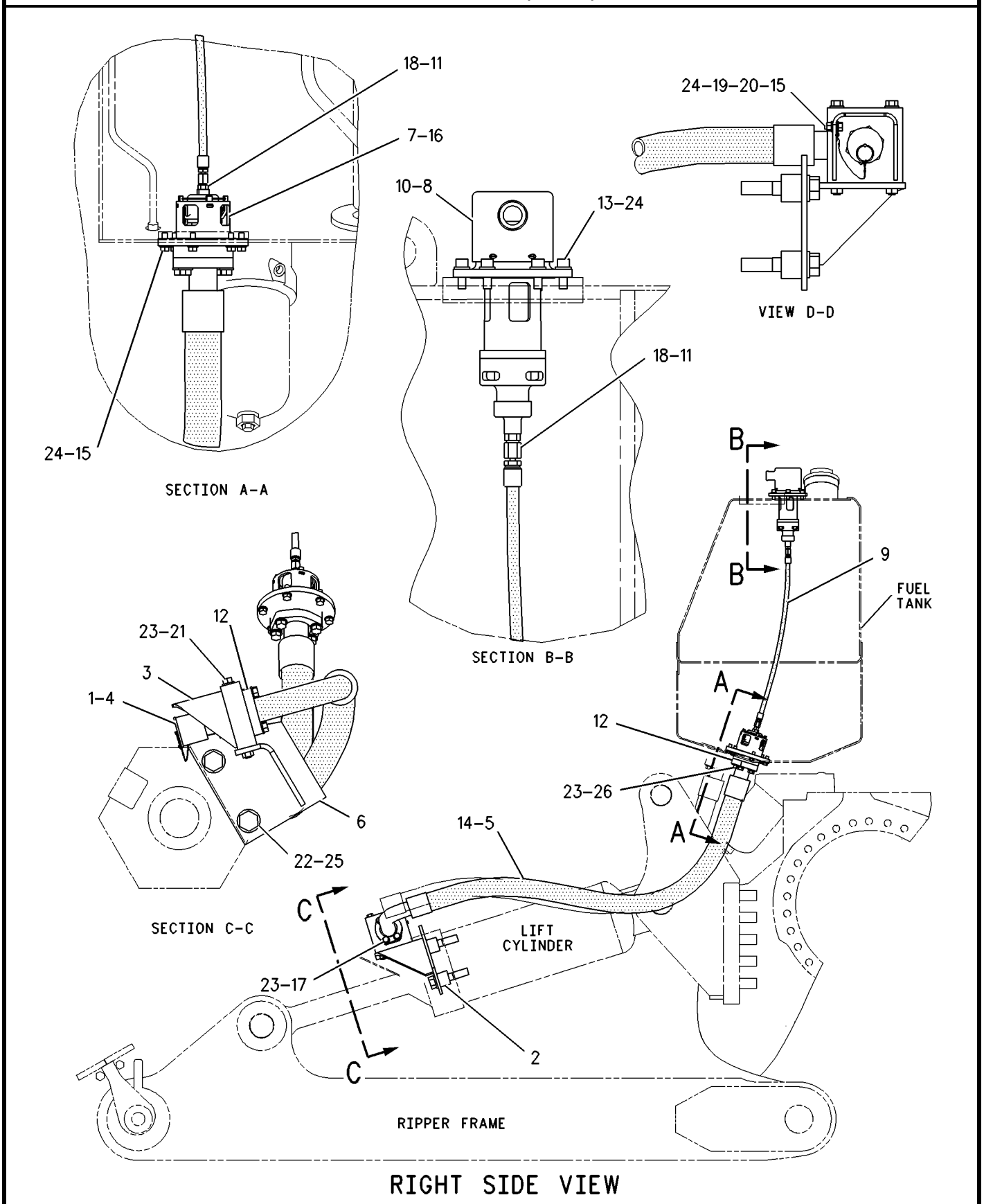

RIGHT SIDE VIEW

GRAPHIC #1 g00809413

FUEL SYSTEM

174-0051 ADAPTER GP-FAST FILL FUEL

S/N: 3KR1561-UP

FOR USE WITH MACHINES EQUIPPED WITH COUNTERWEIGHTS

AN ATTACHMENT

SMCS-1710 **i01666753**

NOTE	REF NO	GRAPHIC REF	PART NUMBER	QTY	PART NAME 1 2 3 4 5 6 (PRODUCT LEVEL)	SEE PAGE
	1	1	**124-2463**	1	ADAPTER GP-FAST FILL FUEL	
	2	1	**9D-0630**	1	CAP-DUST	
	3	1	**9G-0371**	1	BLOCK AS	
	4	1	**9W-8100**	1	PLATE	
	5	1	**163-5455**	1	VALVE AS	
	6	1	**188-5095**	1	VENT AS	
	7	1	**174-0050**	1	HOSE AS	
	8	1	**1H-8128**	1	SEAL-O-RING	
	9	1	**1J-9671**	2	SEAL-O-RING	
	10	1	**1K-6870**	2	LOCKNUT (3/4-10 THD)	
	11	1	**1K-6872**	2	LOCKNUT (1/2-13 THD)	
	12	1	**1P-4582**	4	FLANGE-HALF	
	13	1	**2D-4534**	6	BOLT-SOCKET HEAD (3/8-16X1 IN)	
	14	1	**4J-0527**	2	SEAL-O-RING	
	15	1	**4L-6454**	6	BOLT (3/8-16X1 IN)	
	16	1	**5H-6734**	1	SEAL-O-RING	
	17	1	**5P-2566**	4	BOLT (1/2-13X1.5 IN)	
	18	1	**5P-2618**	2	CONNECTOR	
	19	1	**7X-0341**	2	BOLT (1/2-13X7 IN)	
B	20	1	**7X-0375**	2	BOLT (3/4-10X5 IN)	
B	21	1	**8G-9794**	2	SPACER (22.76X42.16X67MM THK)	
	22	1	**8T-4223**	12	WASHER-HARD (13.5X25.5X3MM THK)	
	23	1	**8T-4896**	12	WASHER-HARD (10.2X18.5X2.5MM THK)	
	24	1	**8T-4994**	4	WASHER-HARD (20X36.5X3.5MM THK)	
	25	1	**8T-8919**	4	BOLT (1/2-13X1.75 IN)	
B	26	1	**8T-8924**	2	BOLT (3/4-10X2.50 IN)	
I	27	1	**9W-9978**	1	HOSE AS	

B-USE AS REQUIRED
I-SEE HOSE FABRICATION GUIDE

174-0051 **ADAPTER GP-FAST FILL FUEL** *(contd.)* **i01666753**

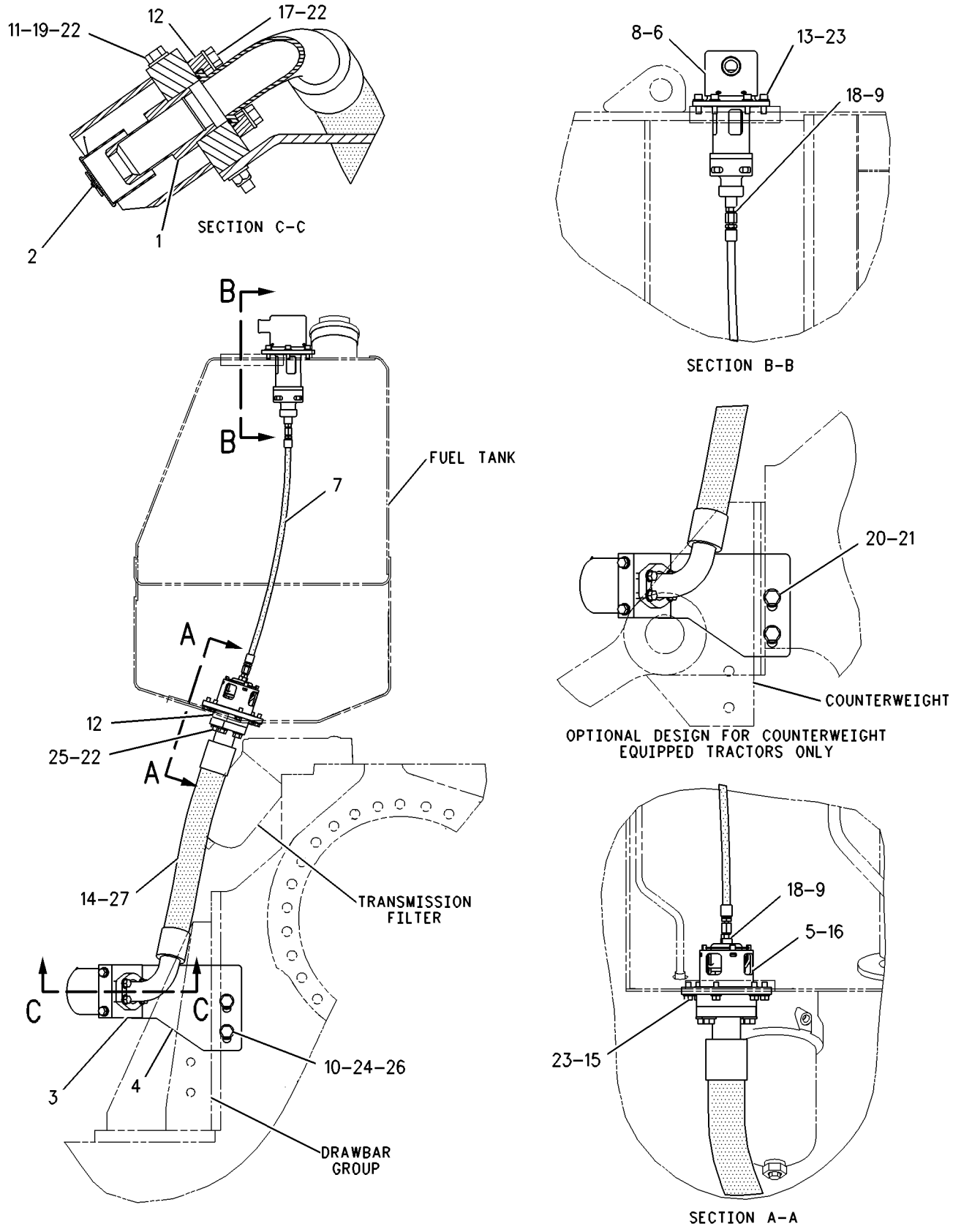

GRAPHIC #1 g00809354

FUEL SYSTEM

196-3829 ADAPTER GP-FAST FILL FUEL

S/N: 3KR1567-UP

FOR USE WITH MACHINES EQUIPPED WITH A WINCH

AN ATTACHMENT

SMCS-1710 **i01667025**

NOTE	REF NO	GRAPHIC REF	PART NUMBER	QTY	PART NAME 1 2 3 4 5 6 (PRODUCT LEVEL)	SEE PAGE
	1	1	**1Q-3392**	1	PLATE AS	
	2	1	**124-2463**	1	ADAPTER GP-FAST FILL FUEL	
	3	1	**9D-0630**	1	CAP-DUST	
	4	1	**163-5455**	1	VALVE AS	
	5	1	**174-0050**	1	HOSE AS	
	6	1	**188-5095**	1	VENT AS	
I	7	1	**197-8504**	1	HOSE AS	
	8	1	**1H-8128**	1	SEAL-O-RING	
	9	1	**1J-9671**	2	SEAL-O-RING	
	10	1	**1P-4582**	4	FLANGE-HALF	
	11	1	**2D-4534**	6	BOLT-SOCKET HEAD (3/8-16X1 IN)	
	12	1	**4J-0527**	2	SEAL-O-RING	
	13	1	**4L-6454**	6	BOLT (3/8-16X1 IN)	
	14	1	**5H-6734**	1	SEAL-O-RING	
	15	1	**5P-2566**	4	BOLT (1/2-13X1.5 IN)	
	16	1	**5P-2618**	2	CONNECTOR	
	17	1	**8T-4223**	8	WASHER-HARD (13.5X25.5X3MM THK)	
	18	1	**8T-4896**	12	WASHER-HARD (10.2X18.5X2.5MM THK)	
	19	1	**8T-8919**	4	BOLT (1/2-13X1.75 IN)	

I-SEE HOSE FABRICATION GUIDE

196-3829 **ADAPTER GP-FAST FILL FUEL** *(contd.)* **i01667025**

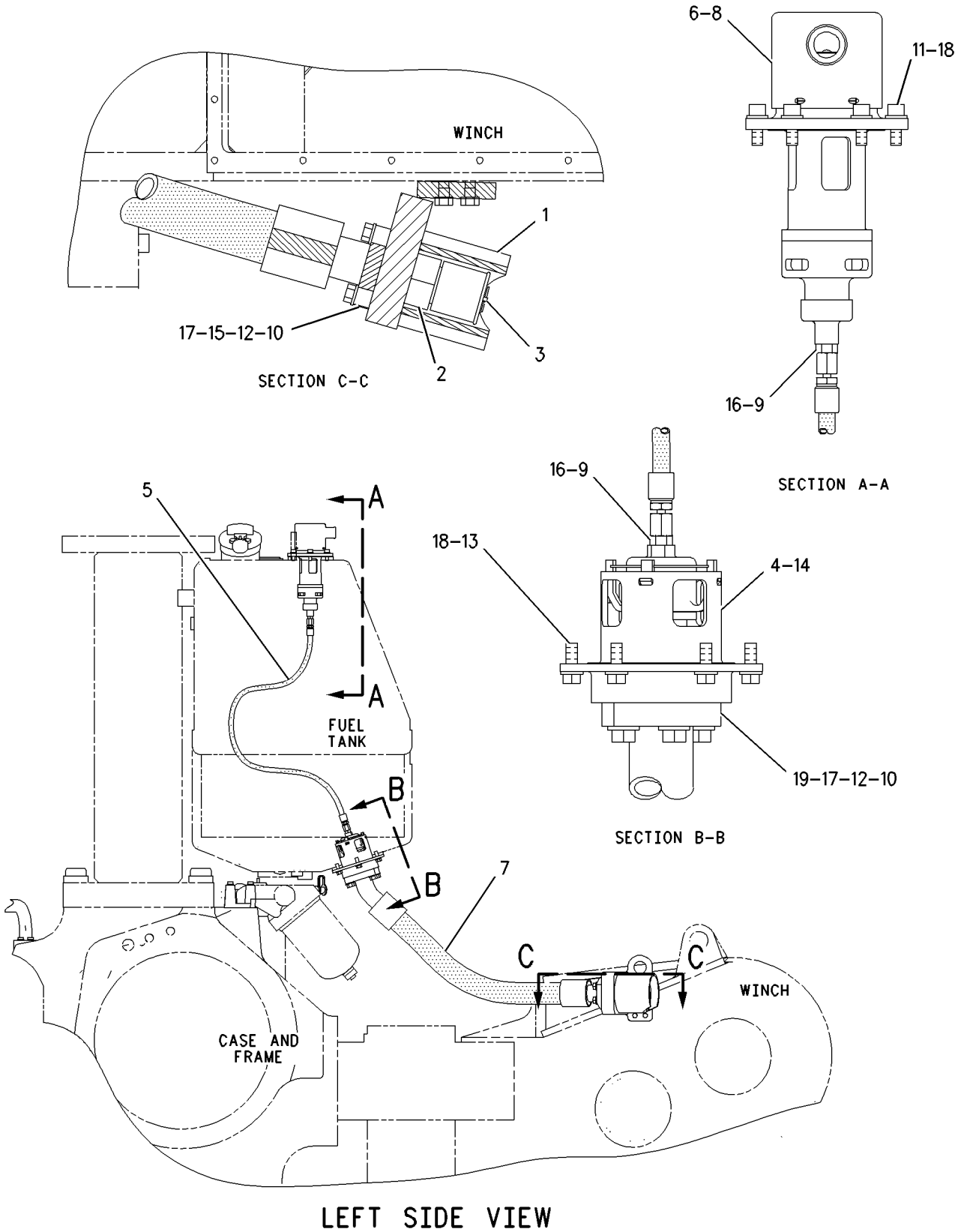

GRAPHIC #1 g00812855

FUEL SYSTEM

208-4826 ADAPTER GP-FAST FILL FUEL

S/N: 3KR1-UP

FOR USE WITH WINCH. CANNOT BE USED WITH COUNTERWEIGHTS AN ATTACHMENT

SMCS-1710 **i01667192**

NOTE	REF NO	GRAPHIC REF	PART NUMBER	QTY	PART NAME 1 2 3 4 5 6 (PRODUCT LEVEL)	SEE PAGE
	1	1	**1Q-3392**	1	PLATE AS	
	2	1	**9D-0630**	1	CAP-DUST	
	3	1	**124-2463**	1	ADAPTER GP-FAST FILL FUEL	
	4	1	**163-5455**	1	VALVE AS	
	5	1	**174-0050**	1	HOSE AS	
	6	1	**188-5095**	1	VENT AS	
I	7	1	**208-4831**	1	HOSE AS	
	8	1	**1H-8128**	1	SEAL-O-RING	
	9	1	**1J-9671**	2	SEAL-O-RING	
	10	1	**1P-4582**	4	FLANGE-HALF	
	11	1	**2D-4534**	6	BOLT-SOCKET HEAD (3/8-16X1 IN)	
	12	1	**4J-0527**	2	SEAL-O-RING	
	13	1	**4L-6454**	6	BOLT (3/8-16X1 IN)	
	14	1	**5H-6734**	1	SEAL-O-RING	
	15	1	**5P-2566**	4	BOLT (1/2-13X1.5 IN)	
	16	1	**5P-2618**	2	CONNECTOR	
	17	1	**8T-4223**	8	WASHER-HARD (13.5X25.5X3MM THK)	
	18	1	**8T-4896**	12	WASHER-HARD (10.2X18.5X2.5MM THK)	
	19	1	**8T-8919**	4	BOLT (1/2-13X1.75 IN)	

I-SEE HOSE FABRICATION GUIDE

208-4826 **ADAPTER GP-FAST FILL FUEL** *(contd.)* **i01667192**

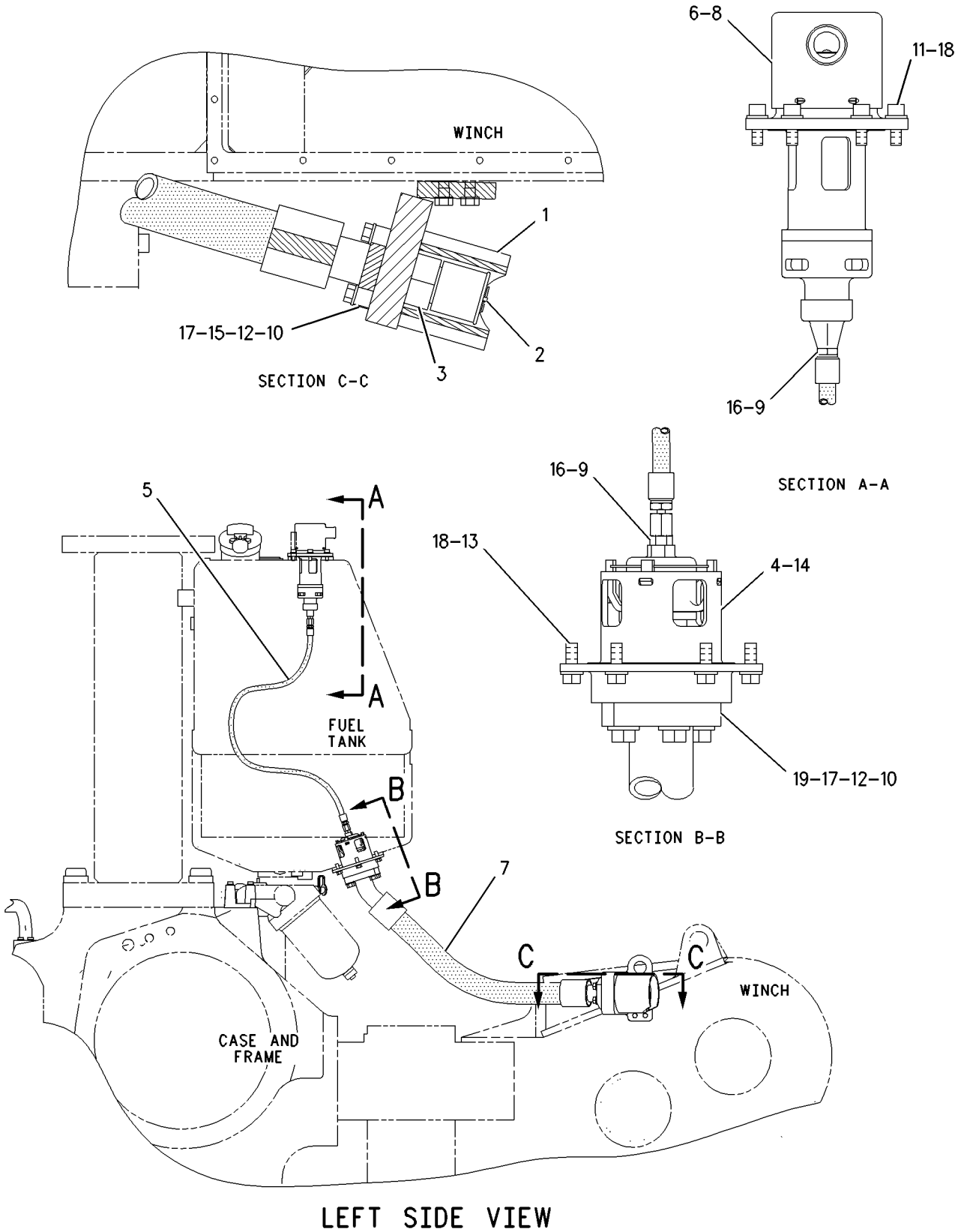

GRAPHIC #1 g00865257

FUEL SYSTEM

125-3420 CONTROL GP-DECELERATOR

S/N: 3KR1-1389

SMCS-1276 **i01421071**

NOTE	REF NO	GRAPHIC REF	PART NUMBER	QTY	PART NAME 1 2 3 4 5 6 (PRODUCT LEVEL)	SEE PAGE
	1	1	**6I-8363**	1	HOUSING AS	
		1	**1F-0750**	2	NUT-WELD (3/8-16 THD)	
	2	1	**7G-7684**	1	LEVER	
	3	1	**6I-8361**	1	SHAFT	
	4	1	**6V-7607**	2	WASHER-HARD (20X30X2.5MM THK)	
	5	1	**9B-7237**	5	BOLT (3/8-16X1.25 IN)	
	6	1	**5P-1075**	4	WASHER-HARD (10.2X22.5X3MM THK)	
	7	1	**9G-0772**	1	PEDAL	
	8	1	**2N-3162**	2	SCREW-MACHINE (10-24X1.25 IN)	
Y	9	1	**3E-7700**	1	SENSOR GP-POSITION (DECELERATOR)	446
	10	1	**2J-6356**	1	RING-RETAINING	
	11	1	**1B-8706**	1	KEY-WOODRUFF	
	12	1	**2K-7979**	2	BEARING-SLEEVE	
	13	1	**8T-2502**	1	BOLT (3/8-16X1.125 IN)	
	14	1	**4B-3609**	1	SETSCREW-SQUARE HEAD	
	15	1	**1B-2578**	2	NUT (3/8-16 THD)	
	16	1	**104-2079**	1	SPRING	
	17	1	**4B-3611**	1	SETSCREW-SQUARE HEAD	
	18	1	**105-1515**	1	GASKET	
	19	1	**8C-5608**	1	SPACER (6.5X9.5X25.4MM THK)	
	20	1	**7X-3178**	1	BOLT (1/4-20X1.625 IN)	
	21	1	**8T-4205**	2	WASHER-HARD (7.2X14.5X2MM THK)	

Y-SEPARATE ILLUSTRATION

125-3420 **CONTROL GP-DECELERATOR** *(contd.)* **i01421071**

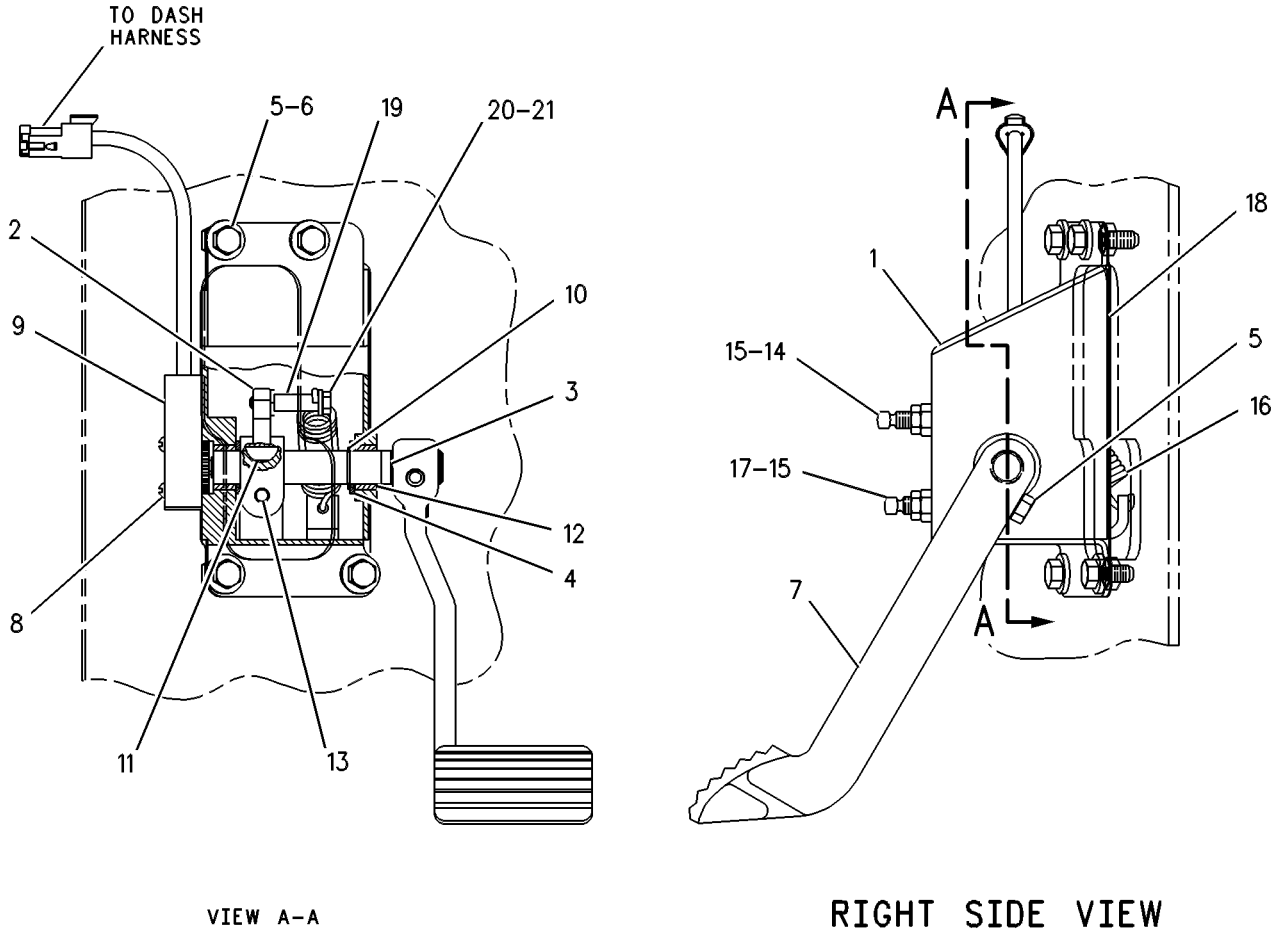

GRAPHIC #1 g00252807

FUEL SYSTEM

125-3420 CONTROL GP-DECELERATOR

S/N: 3KR1390-1748

SMCS-1276 **i01513179**

NOTE	REF NO	GRAPHIC REF	PART NUMBER	QTY	PART NAME 1 2 3 4 5 6 (PRODUCT LEVEL)	SEE PAGE
	1	1	**6I-8363**	1	HOUSING AS	
		1	**1F-0750**	2	NUT-WELD (3/8-16 THD)	
	2	1	**7G-7684**	1	LEVER	
	3	1	**6I-8361**	1	SHAFT	
	4	1	**6V-7607**	2	WASHER-HARD (20X30X2.5MM THK)	
	5	1	**9B-7237**	5	BOLT (3/8-16X1.25 IN)	
	6	1	**5P-1075**	4	WASHER-HARD (10.2X22.5X3MM THK)	
	7	1	**9G-0772**	1	PEDAL	
	8	1	**2N-3162**	2	SCREW-MACHINE (10-24X1.25 IN)	
CY	9	1	**176-1602**	1	SENSOR GP-POSITION (DECELERATOR)	451
	10	1	**2J-6356**	1	RING-RETAINING	
	11	1	**1B-8706**	1	KEY-WOODRUFF	
	12	1	**2K-7979**	2	BEARING-SLEEVE	
	13	1	**8T-2502**	1	BOLT (3/8-16X1.125 IN)	
	14	1	**4B-3609**	1	SETSCREW-SQUARE HEAD	
	15	1	**1B-2578**	2	NUT (3/8-16 THD)	
	16	1	**194-7034**	1	SPRING	
	17	1	**4B-3611**	1	SETSCREW-SQUARE HEAD	
	18	1	**105-1515**	1	GASKET	
	19	1	**8C-5608**	1	SPACER (6.5X9.5X25.4MM THK)	
	20	1	**7X-3178**	1	BOLT (1/4-20X1.625 IN)	
	21	1	**8T-4205**	2	WASHER-HARD (7.2X14.5X2MM THK)	

C-CHANGE FROM PREVIOUS TYPE
Y-SEPARATE ILLUSTRATION

125-3420 **CONTROL GP-DECELERATOR** *(contd.)* **i01513179**

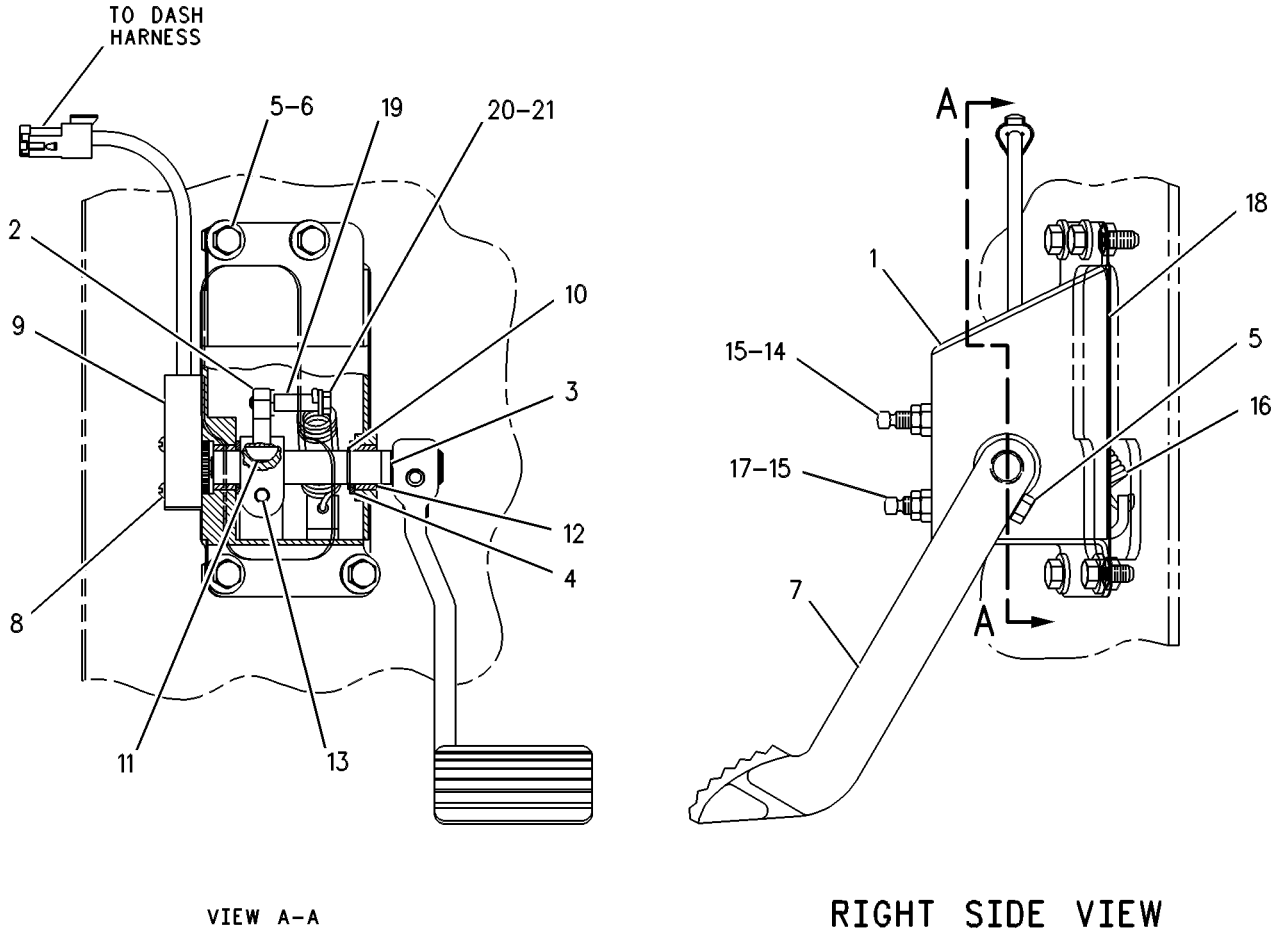

GRAPHIC #1 g00252807

FUEL SYSTEM

125-3420 CONTROL GP-DECELERATOR

S/N: 3KR1749-UP

SMCS-1276 **i01622005**

NOTE	REF NO	GRAPHIC REF	PART NUMBER	QTY	PART NAME 1 2 3 4 5 6 (PRODUCT LEVEL)	SEE PAGE
	1	1	**6I-8363**	1	HOUSING AS	
		1	**1F-0750**	2	NUT-WELD (3/8-16 THD)	
	2	1	**7G-7684**	1	LEVER	
	3	1	**6I-8361**	1	SHAFT	
	4	1	**6V-7607**	2	WASHER-HARD (20X30X2.5MM THK)	
	5	1	**9B-7237**	5	BOLT (3/8-16X1.25 IN)	
	6	1	**5P-1075**	4	WASHER-HARD (10.2X22.5X3MM THK)	
	7	1	**9G-0772**	1	PEDAL	
	8	1	**2N-3162**	2	SCREW-MACHINE (10-24X1.25 IN)	
CY	9	1	**204-7949**	1	SENSOR GP-POSITION (DECELERATOR)	452
	10	1	**2J-6356**	1	RING-RETAINING	
	11	1	**1B-8706**	1	KEY-WOODRUFF	
	12	1	**2K-7979**	2	BEARING-SLEEVE	
	13	1	**8T-2502**	1	BOLT (3/8-16X1.125 IN)	
	14	1	**4B-3609**	1	SETSCREW-SQUARE HEAD	
	15	1	**1B-2578**	2	NUT (3/8-16 THD)	
	16	1	**194-7034**	1	SPRING	
	17	1	**4B-3611**	1	SETSCREW-SQUARE HEAD	
	18	1	**105-1515**	1	GASKET	
	19	1	**8C-5608**	1	SPACER (6.5X9.5X25.4MM THK)	
	20	1	**7X-3178**	1	BOLT (1/4-20X1.625 IN)	
	21	1	**8T-4205**	2	WASHER-HARD (7.2X14.5X2MM THK)	

C-CHANGE FROM PREVIOUS TYPE
Y-SEPARATE ILLUSTRATION

125-3420 **CONTROL GP-DECELERATOR** *(contd.)* **i01622005**

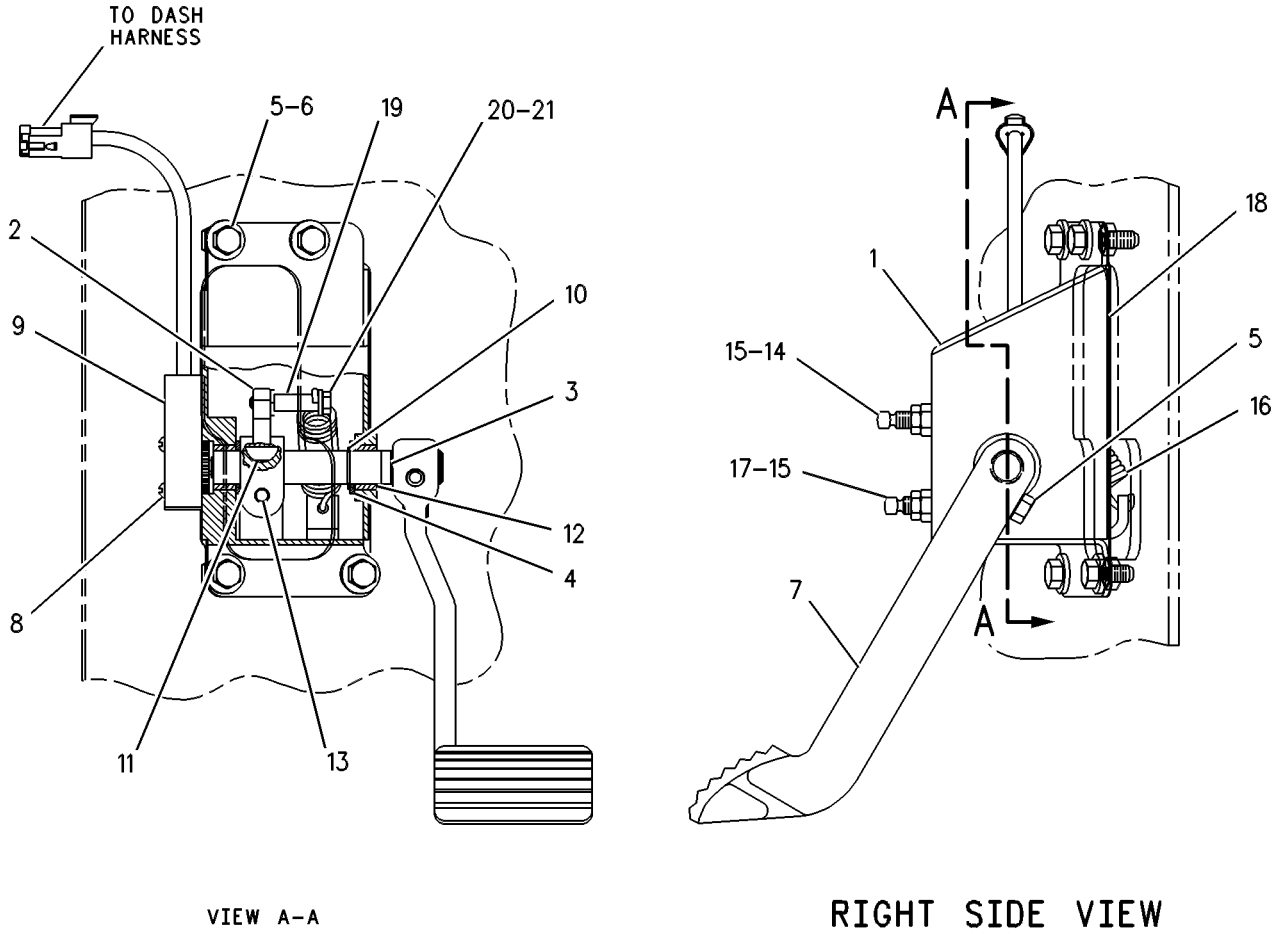

GRAPHIC #1 g00252807

125-3430 DRIVE GP-UNIT INJ HYD PUMP

S/N: 80M1-2631

PART OF 125-3431 DRIVE GP-UNIT INJ HYD PUMP

ALSO AN ATTACHMENT

SMCS-1714 **i01740716**

NOTE	REF NO	GRAPHIC REF	PART NUMBER	QTY	PART NAME 1 2 3 4 5 6 (PRODUCT LEVEL)	SEE PAGE
	1	1	**125-3688**	1	SHAFT AS	
		1	**3S-6605**	1	PLUG-CUP	
	2	1	**150-2392**	1	PLATE-THRUST	
	3	1	**106-3027**	1	GASKET	
	4	1	**125-2730**	1	HOUSING AS	
		1	**2H-1190**	2	DOWEL	
		1	**124-9336**	1	BEARING-SLEEVE	
		1	**124-9337**	1	BEARING-SLEEVE	
	5	1	**125-3429**	1	HOUSING AS	
		1	**2A-3746**	1	PLUG-CUP	
		1	**9M-7129**	1	BEARING-SLEEVE	
		1	**124-9337**	1	BEARING-SLEEVE	
		1	**125-1173**	1	HOUSING-PUMP DRIVE	
	6	1	**0S-1617**	2	BOLT (5/16-18X0.75 IN)	
	7	1	**125-5835**	1	FILTER (UNIT INJECTOR HYDRAULIC PUMP)	
	8	1	**1B-9575**	4	BOLT (5/16-18X1.75 IN)	
	9	1	**0S-1618**	2	BOLT (5/16-18X1 IN)	
	10	1	**9N-0869**	2	WASHER-HARD (8.8X25.5X2MM THK)	
	11	1	**9S-8004**	1	PLUG	
	12	1	**6V-5049**	1	SEAL-O-RING	
	13	1	**1D-4541**	2	BOLT (5/16-18X3 IN)	
	14	1	**8M-6802**	3	SCREW-HEX SOCKET	
	15	1	**124-6641**	1	GEAR (18 TEETH)	
	16	1	**124-6640**	1	PLATE	

125-3430 **DRIVE GP-UNIT INJ HYD PUMP** *(contd.)* **i01740716**

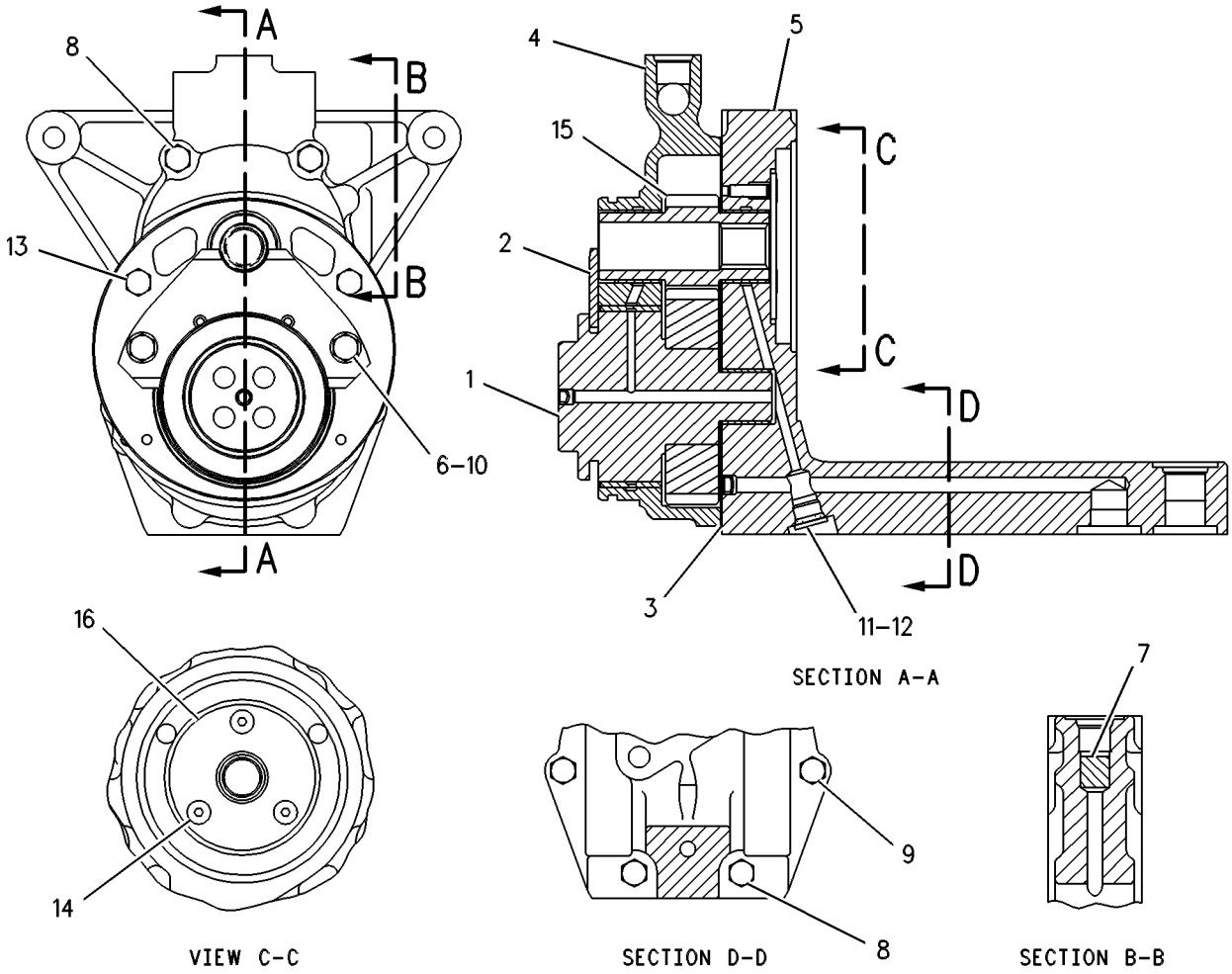

GRAPHIC #1 g00086480

FUEL SYSTEM

125-3431 DRIVE GP-UNIT INJ HYD PUMP

S/N: 80M1-2631
PART OF 115-7641, 135-7810, 155-0058 ENGINE AR
ALSO AN ATTACHMENT

SMCS-1714 **i01740806**

NOTE	REF NO	GRAPHIC REF	PART NUMBER	QTY	PART NAME 1 2 3 4 5 6 (PRODUCT LEVEL)	SEE PAGE
Y	1	1	*125-3430*	1	DRIVE GP-UNIT INJ HYD PUMP	234
	2	1	**6V-3549**	1	SEAL-O-RING	
	3	1	**5P-0076**	4	BOLT-12 POINT HEAD (3/8-16X1.50 IN)	
Y	4	1	**103-6093**	1	SENSOR GP-PRESSURE (ATMOSPHERIC)	455
	5	1	**9X-0261**	1	ADAPTER	
	6	1	**6V-5048**	1	SEAL-O-RING	
	7	1	**6V-5049**	1	SEAL-O-RING	
	8	1	**118-6335**	1	PIN	
	9	1	**6V-4589**	1	SEAL-O-RING	
	10	1	**5P-9890**	2	SEAL-O-RING	

Y-SEPARATE ILLUSTRATION

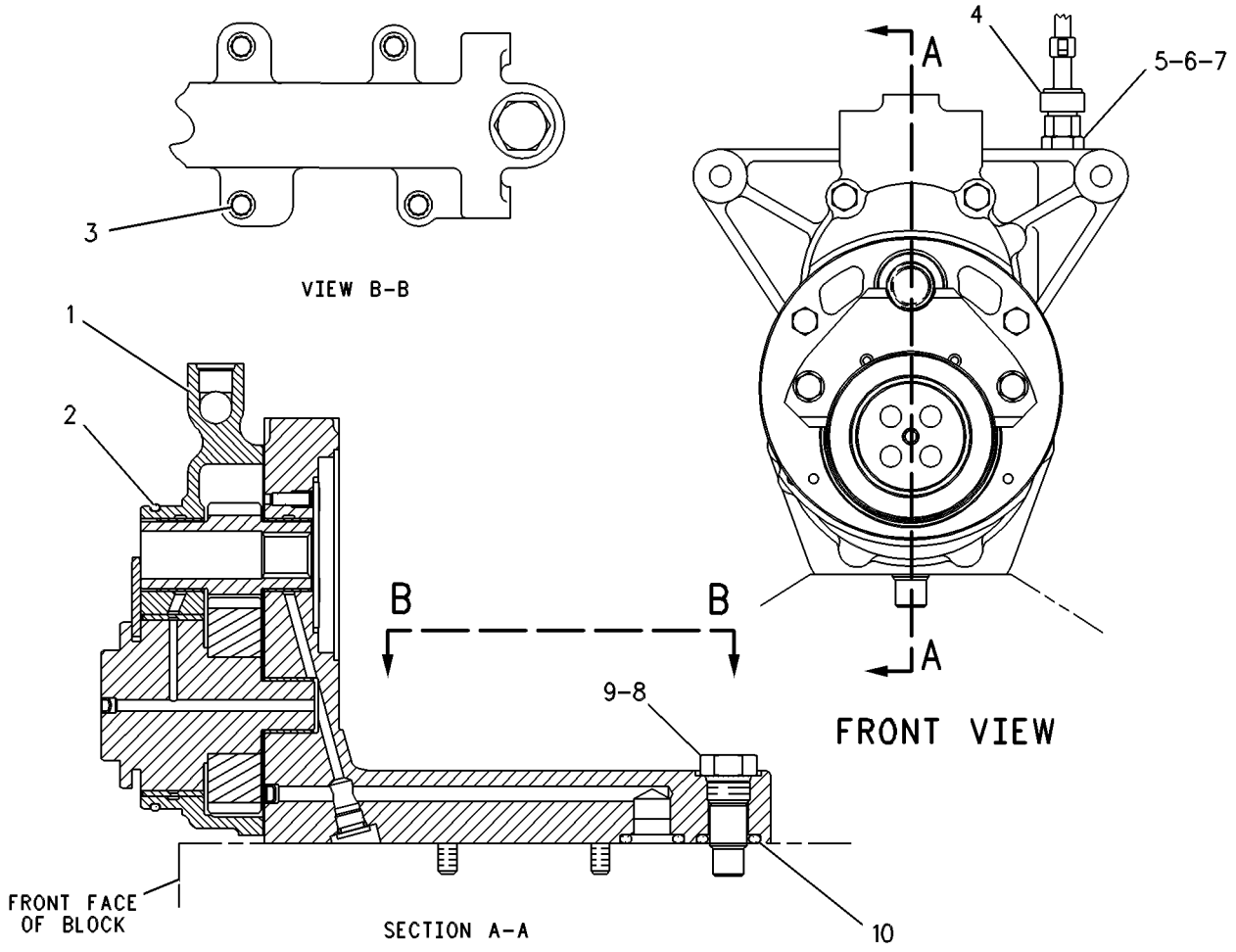

GRAPHIC #1 g00086464

FUEL SYSTEM

125-3431 DRIVE GP-UNIT INJ HYD PUMP

S/N: 80M2632-2705
PART OF 115-7641, 135-7810, 155-0058 ENGINE AR
ALSO AN ATTACHMENT

SMCS-1714 **i01740828**

NOTE	REF NO	GRAPHIC REF	PART NUMBER	QTY	PART NAME 1 2 3 4 5 6 (PRODUCT LEVEL)	SEE PAGE
CY	1	1	**162-0149**	1	DRIVE GP-UNIT INJ HYD PUMP	242
	2	1	**6V-3549**	1	SEAL-O-RING	
	3	1	**5P-0076**	4	BOLT-12 POINT HEAD (3/8-16X1.50 IN)	
Y	4	1	**103-6093**	1	SENSOR GP-PRESSURE (ATMOSPHERIC)	455
	5	1	**9X-0261**	1	ADAPTER	
	6	1	**6V-5048**	1	SEAL-O-RING	
	7	1	**6V-5049**	1	SEAL-O-RING	
	8	1	**118-6335**	1	PIN	
	9	1	**6V-4589**	1	SEAL-O-RING	
	10	1	**5P-9890**	2	SEAL-O-RING	

C-CHANGE FROM PREVIOUS TYPE
Y-SEPARATE ILLUSTRATION

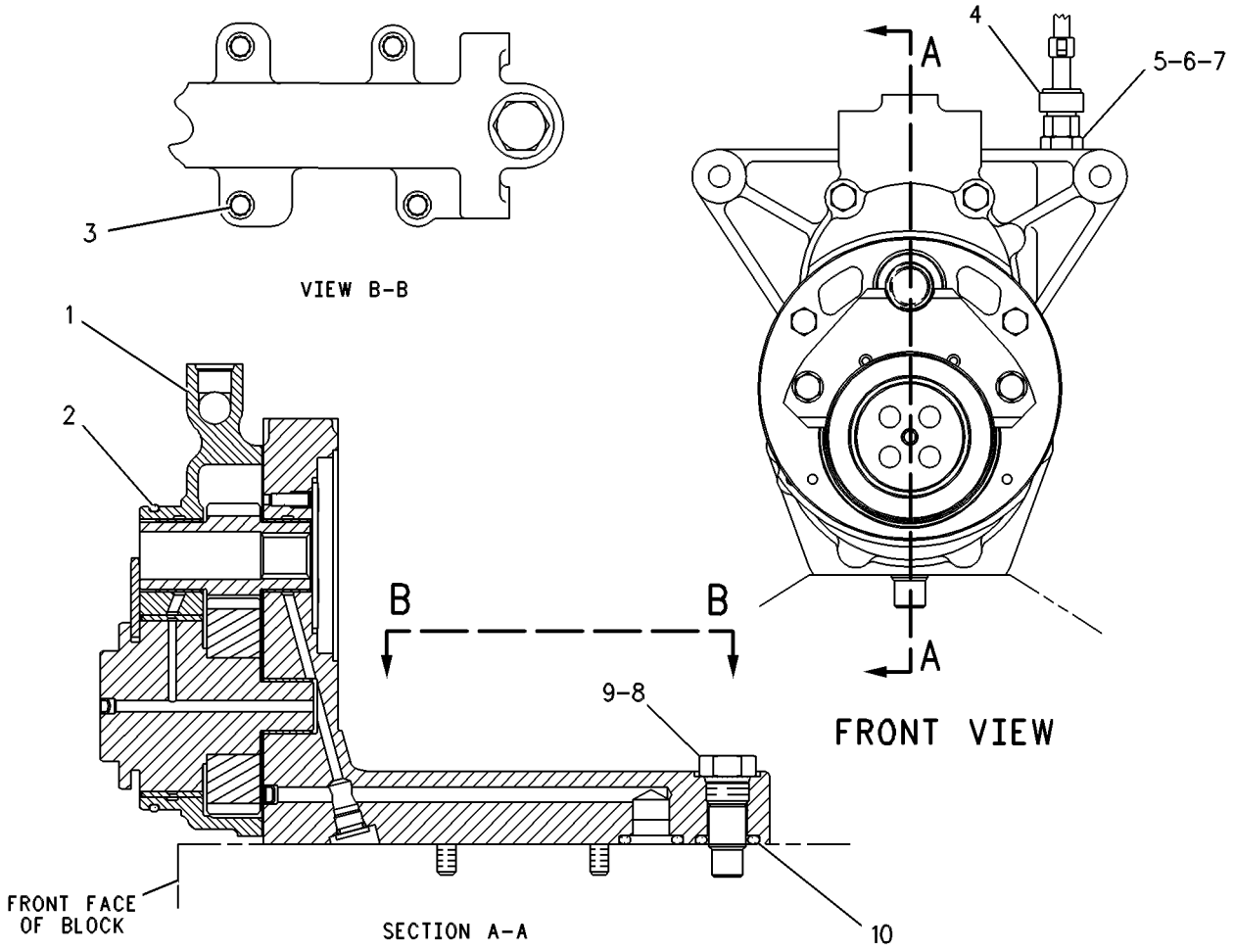

GRAPHIC #1 g00086464

FUEL SYSTEM

125-3431 DRIVE GP-UNIT INJ HYD PUMP

S/N: 80M2706-3037
PART OF 115-7641, 135-7810, 155-0058 ENGINE AR
ALSO AN ATTACHMENT

SMCS-1714 **i01740831**

NOTE	REF NO	GRAPHIC REF	PART NUMBER	QTY	PART NAME 1 2 3 4 5 6 (PRODUCT LEVEL)	SEE PAGE
Y	1	1	**162-0149**	1	DRIVE GP-UNIT INJ HYD PUMP	242
	2	1	**6V-3549**	1	SEAL-O-RING	
	3	1	**5P-0076**	4	BOLT-12 POINT HEAD (3/8-16X1.50 IN)	
CY	4	1	**161-9926**	1	SENSOR GP-PRESSURE (ATMOSPHERIC)	457
	5	1	**5M-2894**	4	WASHER-HARD (10.2X18.5X2.5MM THK)	
	7	1	**6V-5049**	1	SEAL-O-RING	
	8	1	**118-6335**	1	PIN	
	9	1	**6V-4589**	1	SEAL-O-RING	
	10	1	**5P-9890**	2	SEAL-O-RING	
	11	1	**9X-0261**	1	ADAPTER	
	12	1	**6V-5048**	1	SEAL-O-RING	

C-CHANGE FROM PREVIOUS TYPE
Y-SEPARATE ILLUSTRATION

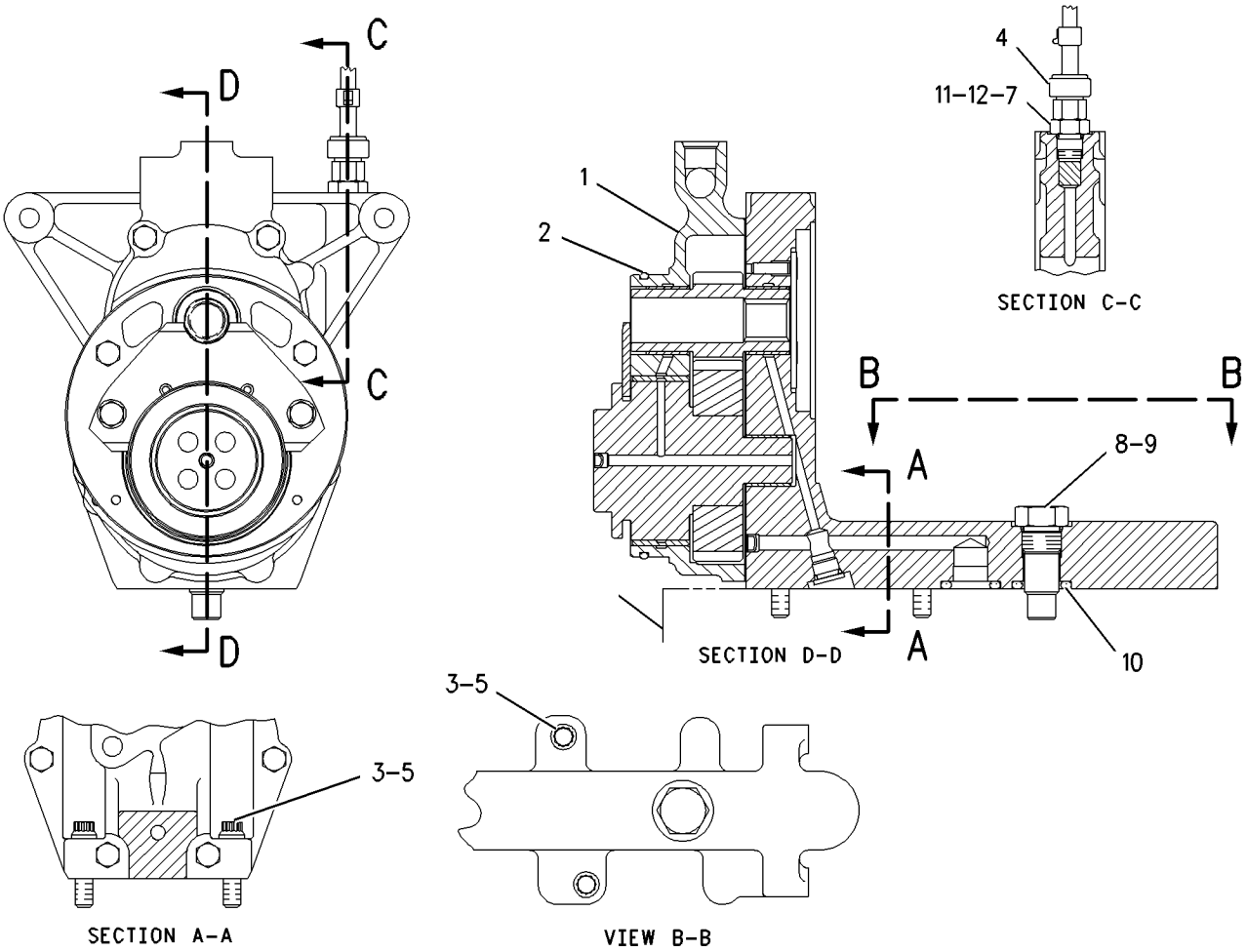

GRAPHIC #1 g00655963

125-3431 DRIVE GP-UNIT INJ HYD PUMP

S/N: 80M3038-3601
PART OF 115-7641, 135-7810, 155-0058 ENGINE AR
ALSO AN ATTACHMENT

SMCS-1714 **i01740832**

NOTE	REF NO	GRAPHIC REF	PART NUMBER	QTY	PART NAME 1 2 3 4 5 6 (PRODUCT LEVEL)	SEE PAGE
Y	1	1	**162-0149**	1	DRIVE GP-UNIT INJ HYD PUMP	242
	2	1	**6V-3549**	1	SEAL-O-RING	
	3	1	**5P-0076**	4	BOLT-12 POINT HEAD (3/8-16X1.50 IN)	
CY	4	1	**161-9925**	1	SENSOR GP-PRESSURE (ATMOSPHERIC)	456
	5	1	**5M-2894**	4	WASHER-HARD (10.2X18.5X2.5MM THK)	
	7	1	**6V-5049**	1	SEAL-O-RING	
	8	1	**118-6335**	1	PIN	
	9	1	**6V-4589**	1	SEAL-O-RING	
	10	1	**5P-9890**	2	SEAL-O-RING	

C-CHANGE FROM PREVIOUS TYPE
Y-SEPARATE ILLUSTRATION

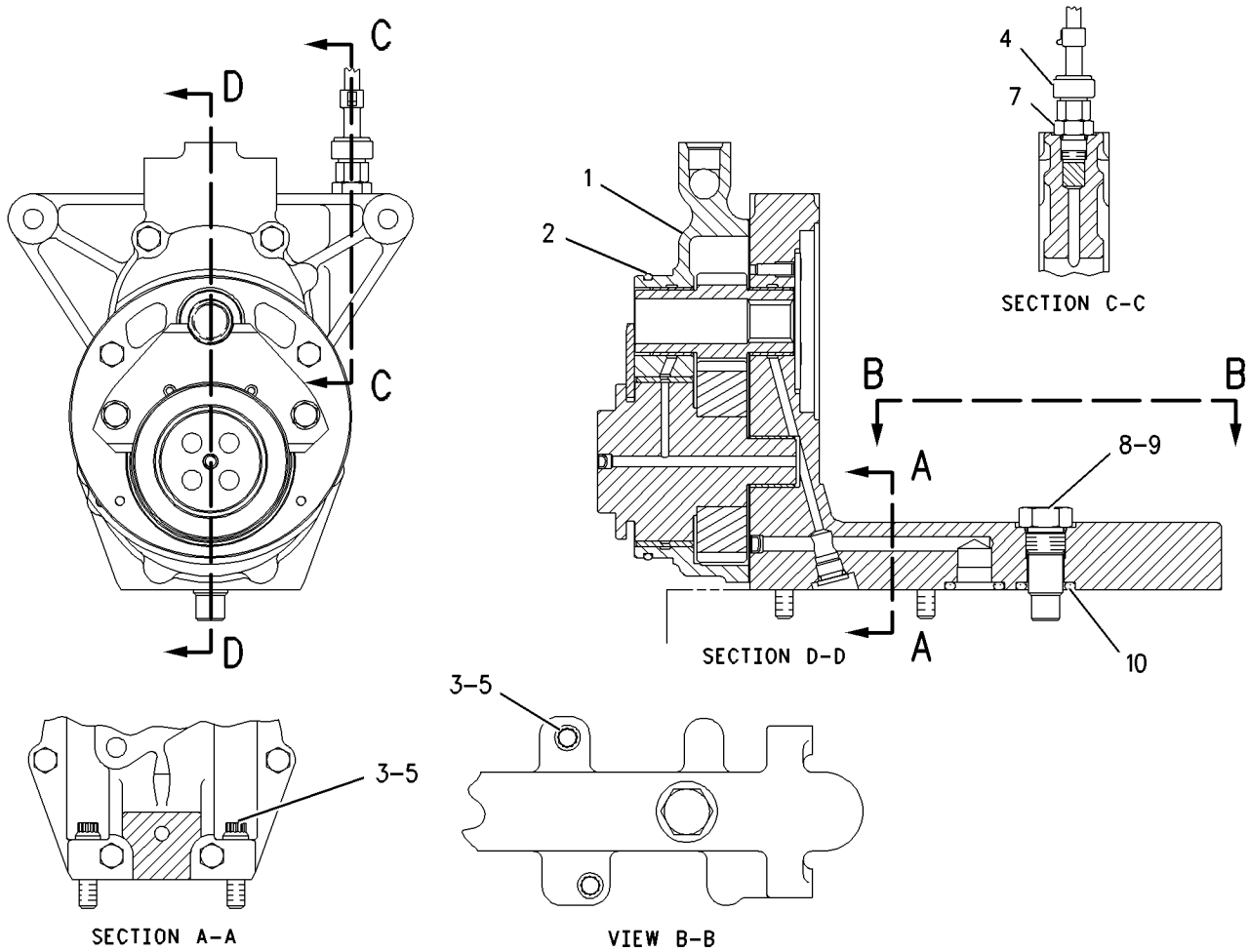

GRAPHIC #1 g00656070

FUEL SYSTEM

125-3431 DRIVE GP-UNIT INJ HYD PUMP

S/N: 80M3602-UP
PART OF 115-7641, 135-7810, 155-0058 ENGINE AR
ALSO AN ATTACHMENT

SMCS-1714 **i01740785**

NOTE	REF NO	GRAPHIC REF	PART NUMBER	QTY	PART NAME 1 2 3 4 5 6 (PRODUCT LEVEL)	SEE PAGE
CY	1	1	**180-6644**	1	DRIVE GP-UNIT INJ HYD PUMP	244
	2	1	**6V-3549**	1	SEAL-O-RING	
	3	1	**5P-0076**	4	BOLT-12 POINT HEAD (3/8-16X1.50 IN)	
Y	4	1	**194-6722**	1	SENSOR GP-PRESSURE (ATMOSPHERIC)	460
	5	1	**5M-2894**	4	WASHER-HARD (10.2X18.5X2.5MM THK)	
	7	1	**6V-5049**	1	SEAL-O-RING	
	8	1	**118-6335**	1	PIN	
	9	1	**6V-4589**	1	SEAL-O-RING	
	10	1	**5P-9890**	2	SEAL-O-RING	

C-CHANGE FROM PREVIOUS TYPE
Y-SEPARATE ILLUSTRATION

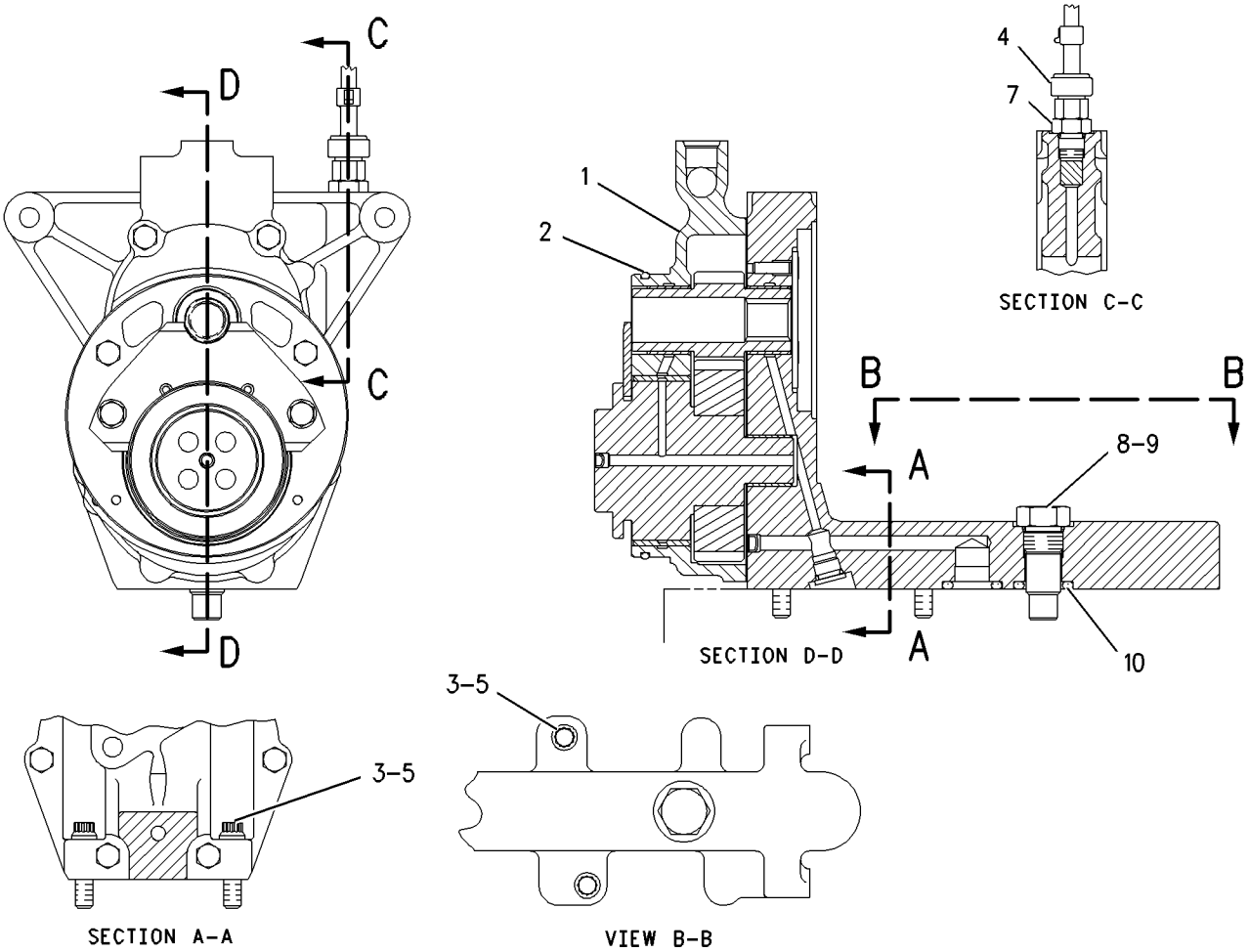

GRAPHIC #1 g00656070

MEMORANDA

FUEL SYSTEM

162-0149 DRIVE GP-UNIT INJ HYD PUMP

S/N: 80M2631-3601

PART OF 125-3431 DRIVE GP-UNIT INJ HYD PUMP

ALSO AN ATTACHMENT

SMCS-1714 **i01740834**

NOTE	REF NO	GRAPHIC REF	PART NUMBER	QTY	PART NAME 1 2 3 4 5 6 (PRODUCT LEVEL)	SEE PAGE
	1	1	**162-0153**	1	SHAFT AS	
		1	**3S-6605**	1	PLUG-CUP	
	2	1	**150-2392**	1	PLATE-THRUST	
	3	1	**106-3027**	1	GASKET	
	4	1	**162-0158**	1	HOUSING AS	
		1	**2H-1190**	2	DOWEL	
		1	**162-0151**	1	BEARING-SLEEVE	
		1	**162-0152**	1	BEARING-SLEEVE	
	5	1	**162-0160**	1	HOUSING AS	
		1	**2A-3746**	1	PLUG-CUP	
		1	**162-0150**	1	BEARING-SLEEVE	
		1	**162-0151**	1	BEARING-SLEEVE	
	6	1	**0S-1617**	2	BOLT (5/16-18X0.75 IN)	
	7	1	**125-5835**	1	FILTER (UNIT INJECTOR HYDRAULIC PUMP)	
	8	1	**1B-9575**	4	BOLT (5/16-18X1.75 IN)	
	9	1	**0S-1618**	2	BOLT (5/16-18X1 IN)	
	10	1	**9N-0869**	2	WASHER-HARD (8.8X25.5X2MM THK)	
	11	1	**9S-8004**	1	PLUG	
	12	1	**6V-5049**	1	SEAL-O-RING	
	13	1	**1D-4541**	2	BOLT (5/16-18X3 IN)	
	14	1	**8M-6802**	3	SCREW-HEX SOCKET	
	15	1	**162-0155**	1	GEAR-PUMP DRIVE (18 TEETH)	
	16	1	**124-6640**	1	PLATE	

162-0149 DRIVE GP-UNIT INJ HYD PUMP *(contd.)* **i01740834**

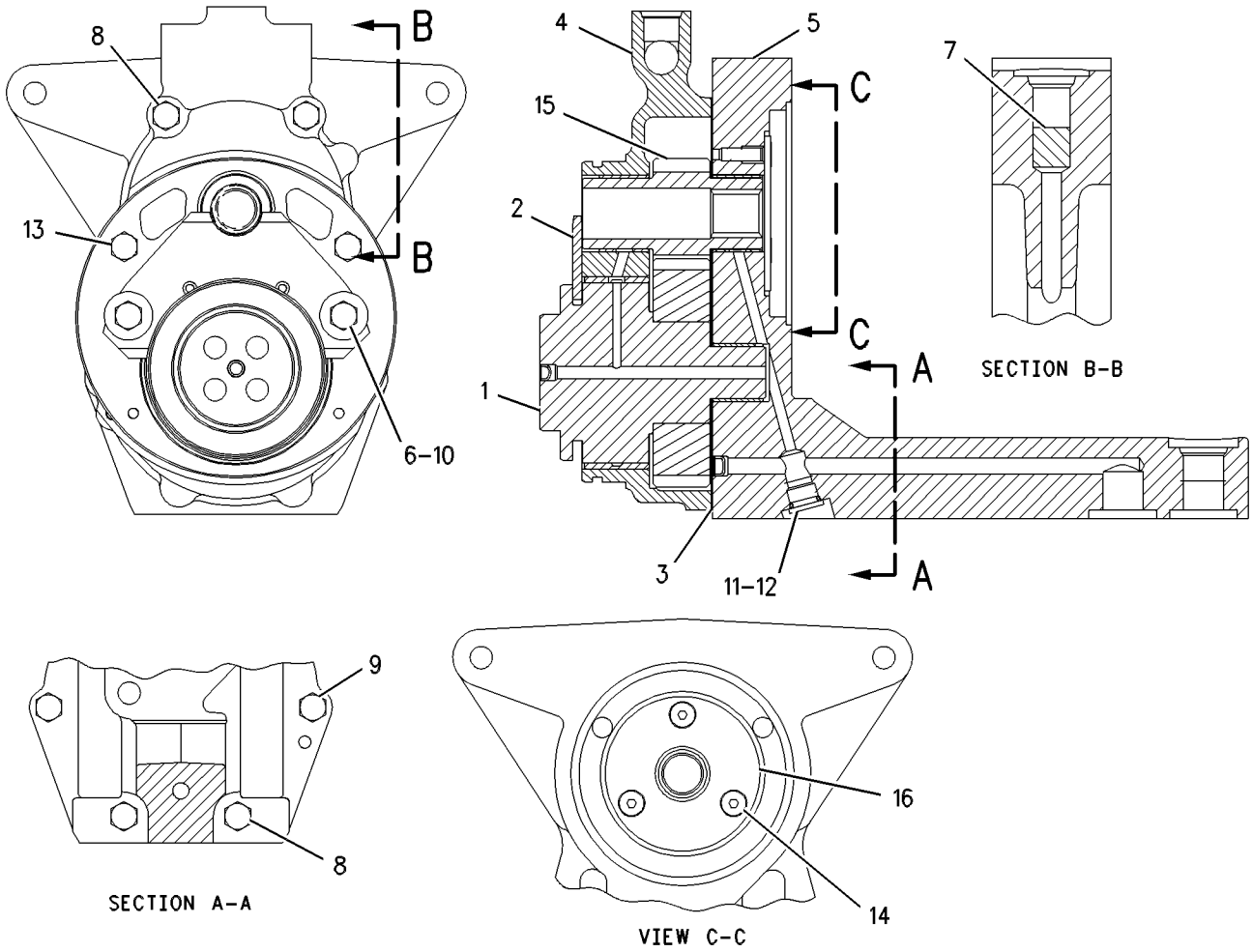

GRAPHIC #1 g00539583

180-6644 DRIVE GP-UNIT INJ HYD PUMP

S/N: 80M3602-UP

PART OF 125-3431 DRIVE GP-UNIT INJ HYD PUMP

ALSO AN ATTACHMENT

SMCS-1714 **i01630279**

NOTE	REF NO	GRAPHIC REF	PART NUMBER	QTY	PART NAME 1 2 3 4 5 6 (PRODUCT LEVEL)	SEE PAGE
	1	1	**180-6645**	1	SHAFT AS	
	1A	1	**3S-6605**	1	PLUG-CUP	
	2	1	**150-2392**	1	PLATE-THRUST	
	3	1	**180-6646**	1	GASKET	
	4	1	**180-6647**	1	HOUSING AS	
	4A	1	**2H-1190**	2	DOWEL	
	4B	1	**162-0151**	1	BEARING-SLEEVE	
	4C	1	**162-0152**	1	BEARING-SLEEVE	
	5	1	**162-0160**	1	HOUSING AS	
	5A	1	**2A-3746**	1	PLUG-CUP	
	5B	1	**162-0150**	1	BEARING-SLEEVE	
	5C	1	**162-0151**	1	BEARING-SLEEVE	
	6	1	**125-5835**	1	FILTER (UNIT INJECTOR HYDRAULIC PUMP)	
	7	1	**1B-9575**	4	BOLT (5/16-18X1.75 IN)	
	8	1	**0S-1618**	2	BOLT (5/16-18X1 IN)	
	9	1	**9N-0869**	2	WASHER-HARD (8.8X25.5X2MM THK)	
	10	1	**9S-8004**	1	PLUG	
	11	1	**6V-5049**	1	SEAL-O-RING	
	12	1	**1D-4541**	2	BOLT (5/16-18X3 IN)	
	13	1	**8M-6802**	3	SCREW-HEX SOCKET	
	14	1	**155-6637**	1	GEAR-OIL DRIVE (13 TEETH)	
	15	1	**124-6640**	1	PLATE	
	16	1	**031-2701**	2	BOLT-LOCKING (5/16-18X1.25 IN)	

180-6644 **DRIVE GP-UNIT INJ HYD PUMP** ***(contd.)*** **i01630279**

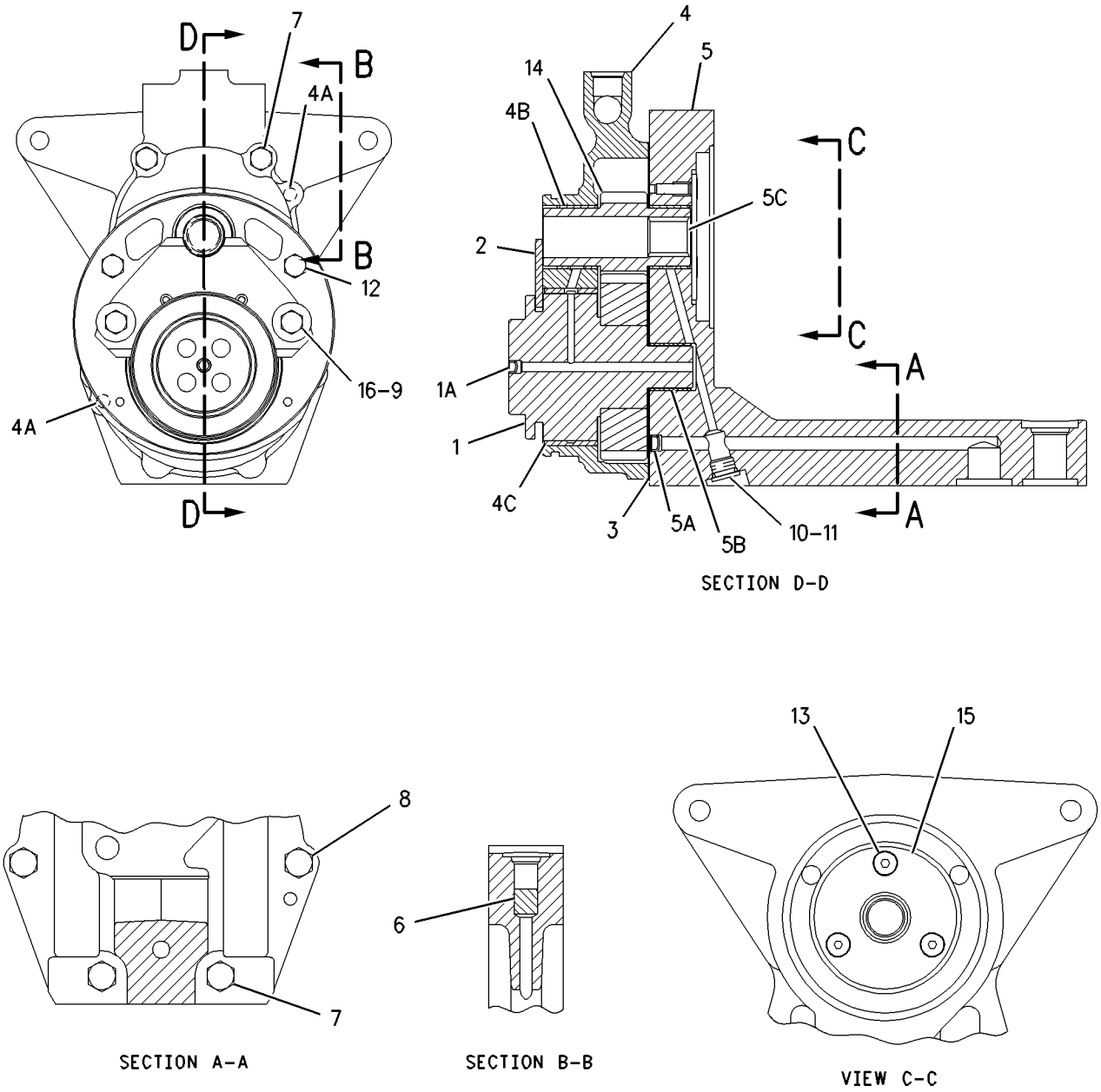

GRAPHIC #1 g00702509

FUEL SYSTEM

160-1164 FILTER & LINES GP-FUEL

S/N: 3KR1-UP

FIELD INSTALLATION

SMCS-1261 **i01400815**

NOTE	PART NUMBER	QTY	PART NAME 1 2 3 4 5 6 (PRODUCT LEVEL)	SEE PAGE
	160-4930	1	ADAPTER AS	
	5M-0402	1	SPACER	
	4L-6454	4	BOLT (3/8-16X1 IN)	
	5M-3062	1	BOLT (3/8-16X.75 IN)	
	5S-7379	2	BOLT (3/8-16X.875 IN)	
	6D-1746	1	BOLT (1/2-13X1.32 IN)	
	8T-8917	2	BOLT (1/2-13X1.25 IN)	
	8T-9377	1	BOLT (3/8-16X2.25 IN)	
	9B-7237	2	BOLT (3/8-16X1.25 IN)	
	4D-9376	1	BOSS (3/8-16 THD)	
	4V-7412	3	BOSS (3/8-16 THD)	
	9S-1803	1	BOSS	
	153-3699	1	BRACKET AS	
	7C-7091	1	BLOCK	
	6V-9830	1	CAP AS (13/16-16 THD)	
	6D-4244	2	CLIP	
	6V-1228	1	CLIP (10.3MM ID)	
	9M-8406	2	CLIP	
	6V-8713	2	CONNECTOR (1-14 THD X 1 1/16-12 THD)	
	3B-4610	1	COTTER	
	149-4280	1	COVER AS	
	1F-0748	1	NUT-WELD (1/2-13 THD)	
	1F-0750	3	NUT-WELD (3/8-16 THD)	
	4F-9101	4	LUG (1/4-20 THD)	
	7T-1099	2	LINK	
	8C-8762	1	ELBOW (1 3/16-12 THD)	
	160-4876	1	ELBOW	
	129-0372	1	FILTER AS-WATER SEP & FUEL	
	129-0373	1	ELEMENT-FILTER	
	129-0375	1	BOWL AS-WATER COLLECTION	
	141-0284	1	KIT-FUEL FILTER & WATER SEP	
	1P-0436	1	GASKET (FUEL PRIMING PUMP)	
D	**5P-5991**		HOSE (1.1M)	
BI	**149-9934**	1	HOSE AS	
BI	**8W-4710**	1	HOSE AS	
BI	**8W-5729**	1	HOSE AS	
	1F-0748	2	NUT-WELD (1/2-13 THD)	
	5T-9314	1	PLATE	
	123-6801	1	PLATE	
	156-5462	1	PLATE	
	6V-8943	1	REDUCER AS	
	7J-9108	1	SEAL-O-RING (15.72MM ID)	
	2M-9780	1	SEAL-O-RING (19.18MM ID)	
	3D-2824	1	SEAL-O-RING (23.47MM ID)	
B	**3K-0360**	3	SEAL-O-RING (16.36MM ID)	
	6V-5048	2	SEAL-O-RING (8.92MM ID)	

160-1164 FILTER & LINES GP-FUEL *(contd.)* i01400815

NOTE	PART NUMBER	QTY	PART NAME 1 2 3 4 5 6 (PRODUCT LEVEL)	SEE PAGE
	6V-5050	3	SEAL-O-RING (23.47MM ID)	
	6V-8398	1	SEAL-O-RING (12.47MM ID)	
	6V-9746	1	SEAL-O-RING (18.94MM ID)	
B	**7J-9108**	5	SEAL-O-RING (15.72MM ID)	
	8L-2746	2	SEAL-O-RING (15.6MM ID)	
	8B-4624	1	SHIM (.032IN THK)	
	7K-1181	2	STRAP-CABLE	
	153-6240	1	TEE AS	
	2M-9780	1	SEAL-O-RING (19.18MM ID)	
	6V-8398	1	SEAL-O-RING (12.47MM ID)	
	8C-7514	1	TEE	
	160-4102	1	TUBE AS	
	9W-1599	1	VALVE-CHECK	
	5P-1075	1	WASHER-HARD (10.2X22.5X3MM THK)	
	5P-1076	2	WASHER-HARD (13.5X30X4MM THK)	
	7X-0772	5	WASHER-HARD (10.2X25.5X2.5MM THK)	
	8T-4896	4	WASHER-HARD (10.2X18.5X2.5MM THK)	

B-USE AS REQUIRED
D-ORDER BY THE METER
I-SEE HOSE FABRICATION GUIDE

<END>

FUEL SYSTEM

149-9936 FILTER GP-FUEL

S/N: 3KR1007-1462

SMCS-1261 **i01740869**

NOTE	REF NO	GRAPHIC REF	PART NUMBER	QTY	PART NAME 1 2 3 4 5 6 (PRODUCT LEVEL)	SEE PAGE
	1	1	**2B-0941**	2	SPACER (10.5X19X19MM THK)	
	2	1	**5P-8502**	1	PADLOCK GP	
		1	**5P-8500**	1	KEY	
		1	**8Y-6364**	1	SLEEVE	
	3	1	**6V-1228**	1	CLIP	
	4	1	**6V-8358**	1	VALVE-BALL (MANUAL SHUTOFF)	
	5	1	**6V-9830**	1	CAP AS	
	6	1	**7G-8150**	1	PLATE AS	
		1	**1F-0750**	2	NUT-WELD (3/8-16 THD)	
	7	1	**8T-3491**	1	ELBOW	
	8	1	**8T-6638**	1	VALVE-BALL	
	9	1	**9S-1803**	3	BOSS	
	10	1	**9W-1599**	1	VALVE-CHECK	
	11	1	**033-6783**	1	FITTING	
	12	1	**110-5981**	1	BRACKET AS	
	13	1	**1F-0750**	1	NUT-WELD (3/8-16 THD)	
Y	14	1	*129-4832*	1	PUMP GP-FUEL PRM & PRIM FILTER	292
	15	1	**6V-8713**	1	CONNECTOR	
	16	1	**8T-6876**	1	ELBOW	
	17	1	**6V-8943**	1	REDUCER AS	
I	18	1	**149-9934**	1	HOSE AS	
	19	1	**149-9935**	1	TUBE AS	
	20	1	**6V-8722**	1	ELBOW	
	21	1	**8C-7514**	1	TEE	
	22	1	**8T-5050**	1	CONNECTOR	
	23	1	**2M-9780**	2	SEAL-O-RING	
	24	1	**3D-2824**	5	SEAL-O-RING	
	25	1	**4L-6454**	1	BOLT (3/8-16X1 IN)	
	26	1	**4L-6459**	1	BOLT (3/8-16X2.5 IN)	
	27	1	**5P-1075**	6	WASHER-HARD (10.2X22.5X3MM THK)	
	28	1	**5P-1076**	2	WASHER-HARD (13.5X30X4MM THK)	
	29	1	**5P-2228**	2	BOLT (1/2-13X1 IN)	
	30	1	**5S-7382**	1	BOLT (3/8-16X1.375 IN)	
	31	1	**6D-4244**	2	CLIP	
	32	1	**6V-8398**	4	SEAL-O-RING	
	33	1	**6V-9746**	1	SEAL-O-RING	
	34	1	**7D-7735**	1	CLIP	
	35	1	**7J-9108**	4	SEAL-O-RING	
	36	1	**7S-1912**	2	CLIP	
	37	1	**8C-8762**	1	ELBOW	
	38	1	**8T-4896**	2	WASHER-HARD (10.2X18.5X2.5MM THK)	
	39	1	**8T-9377**	3	BOLT (3/8-16X2.25 IN)	
	40	1	**9B-7237**	2	BOLT (3/8-16X1.25 IN)	
E	41	1	**5P-1695**		HOSE (60CM)	
D	42	1	**5P-5991**		HOSE (1.1M)	
	43	1	**3K-0360**	1	SEAL-O-RING	
	44	1	**3J-1907**	2	SEAL-O-RING	
I	45	1	**119-5117**	1	HOSE AS	
	46	1	**4S-1962**	1	CLIP	
	47	1	**9X-6772**	2	STRAP-CABLE	
	48	1	**169-3189**	1	SLEEVE	

D-ORDER BY THE METER
E-ORDER BY THE CENTIMETER
I-SEE HOSE FABRICATION GUIDE
Y-SEPARATE ILLUSTRATION

149-9936 **FILTER GP-FUEL** *(contd.)* **i01740869**

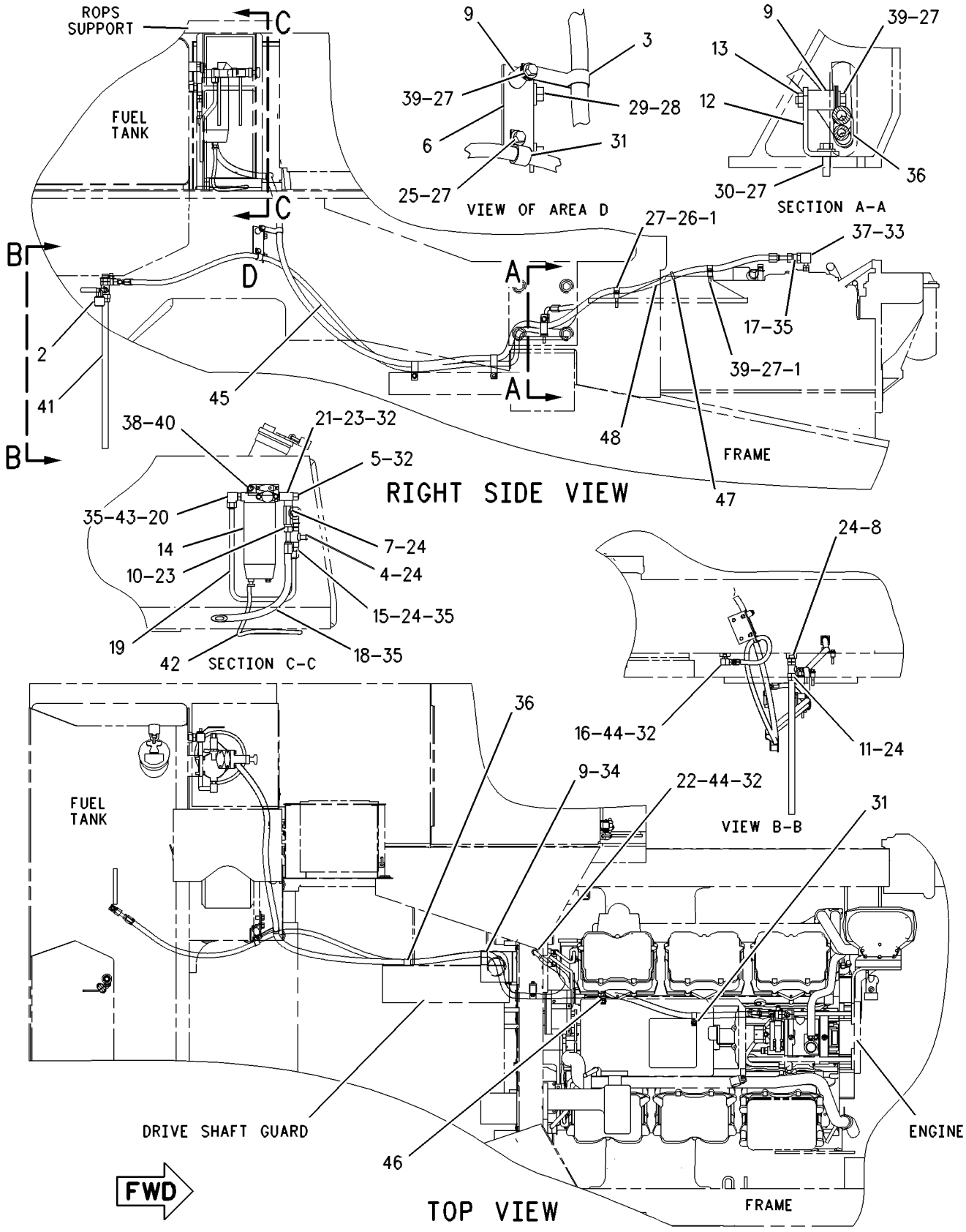

GRAPHIC #1 g00552073

FUEL SYSTEM

149-9936 FILTER GP-FUEL

S/N: 3KR1463-UP

SMCS-1261 **i01741059**

NOTE	REF NO	GRAPHIC REF	PART NUMBER	QTY	PART NAME 1 2 3 4 5 6 (PRODUCT LEVEL)	SEE PAGE
	1	1	**2B-0941**	2	SPACER (10.5X19X19MM THK)	
	2	1	**5P-8502**	1	PADLOCK GP	
		1	**5P-8500**	1	KEY	
		1	**8Y-6364**	1	SLEEVE	
	3	1	**6V-1228**	1	CLIP	
	4	1	**6V-8358**	1	VALVE-BALL (MANUAL SHUTOFF)	
	5	1	**6V-9830**	1	CAP AS	
	6	1	**7G-8150**	1	PLATE AS	
		1	**1F-0750**	2	NUT-WELD (3/8-16 THD)	
	7	1	**8T-3491**	1	ELBOW	
	8	1	**8T-6638**	1	VALVE-BALL	
	9	1	**9S-1803**	3	BOSS	
	10	1	**9W-1599**	1	VALVE-CHECK	
	11	1	**033-6783**	1	FITTING	
	12	1	**110-5981**	1	BRACKET AS	
	13	1	**1F-0750**	1	NUT-WELD (3/8-16 THD)	
CY	14	1	*185-9977*	1	FILTER GP-WATER SEP & FUEL	254
	15	1	**6V-8713**	1	CONNECTOR	
	16	1	**8T-6876**	1	ELBOW	
	17	1	**6V-8943**	1	REDUCER AS	
I	18	1	**149-9934**	1	HOSE AS	
	19	1	**149-9935**	1	TUBE AS	
	20	1	**6V-8722**	1	ELBOW	
	21	1	**8C-7514**	1	TEE	
	22	1	**8T-5050**	1	CONNECTOR	
	23	1	**2M-9780**	2	SEAL-O-RING	
	24	1	**3D-2824**	5	SEAL-O-RING	
	25	1	**4L-6454**	1	BOLT (3/8-16X1 IN)	
	26	1	**4L-6459**	1	BOLT (3/8-16X2.5 IN)	
	27	1	**5P-1075**	6	WASHER-HARD (10.2X22.5X3MM THK)	
	28	1	**5P-1076**	2	WASHER-HARD (13.5X30X4MM THK)	
	29	1	**5P-2228**	2	BOLT (1/2-13X1 IN)	
	30	1	**5S-7382**	1	BOLT (3/8-16X1.375 IN)	
	31	1	**6D-4244**	2	CLIP	
	32	1	**6V-8398**	4	SEAL-O-RING	
	33	1	**6V-9746**	1	SEAL-O-RING	
	34	1	**7D-7735**	2	CLIP	
	35	1	**7J-9108**	4	SEAL-O-RING	
	36	1	**7S-1912**	1	CLIP	
	37	1	**8C-8762**	1	ELBOW	
	38	1	**8T-4896**	2	WASHER-HARD (10.2X18.5X2.5MM THK)	
	39	1	**8T-9377**	3	BOLT (3/8-16X2.25 IN)	
	40	1	**9B-7237**	2	BOLT (3/8-16X1.25 IN)	
E	41	1	**5P-1695**		HOSE (60CM)	
D	42	1	**5P-5991**		HOSE (1.1M)	
	43	1	**3K-0360**	1	SEAL-O-RING	
	44	1	**3J-1907**	2	SEAL-O-RING	
I	45	1	**119-5117**	1	HOSE AS	
	46	1	**4S-1962**	1	CLIP	
	47	1	**9X-6772**	2	STRAP-CABLE	
	48	1	**169-3189**	1	SLEEVE	
	49	1	**6T-7774**	1	SCREEN-FUEL TANK	

C-CHANGE FROM PREVIOUS TYPE
D-ORDER BY THE METER
E-ORDER BY THE CENTIMETER
I-SEE HOSE FABRICATION GUIDE
Y-SEPARATE ILLUSTRATION

149-9936 **FILTER GP-FUEL** *(contd.)* **i01741059**

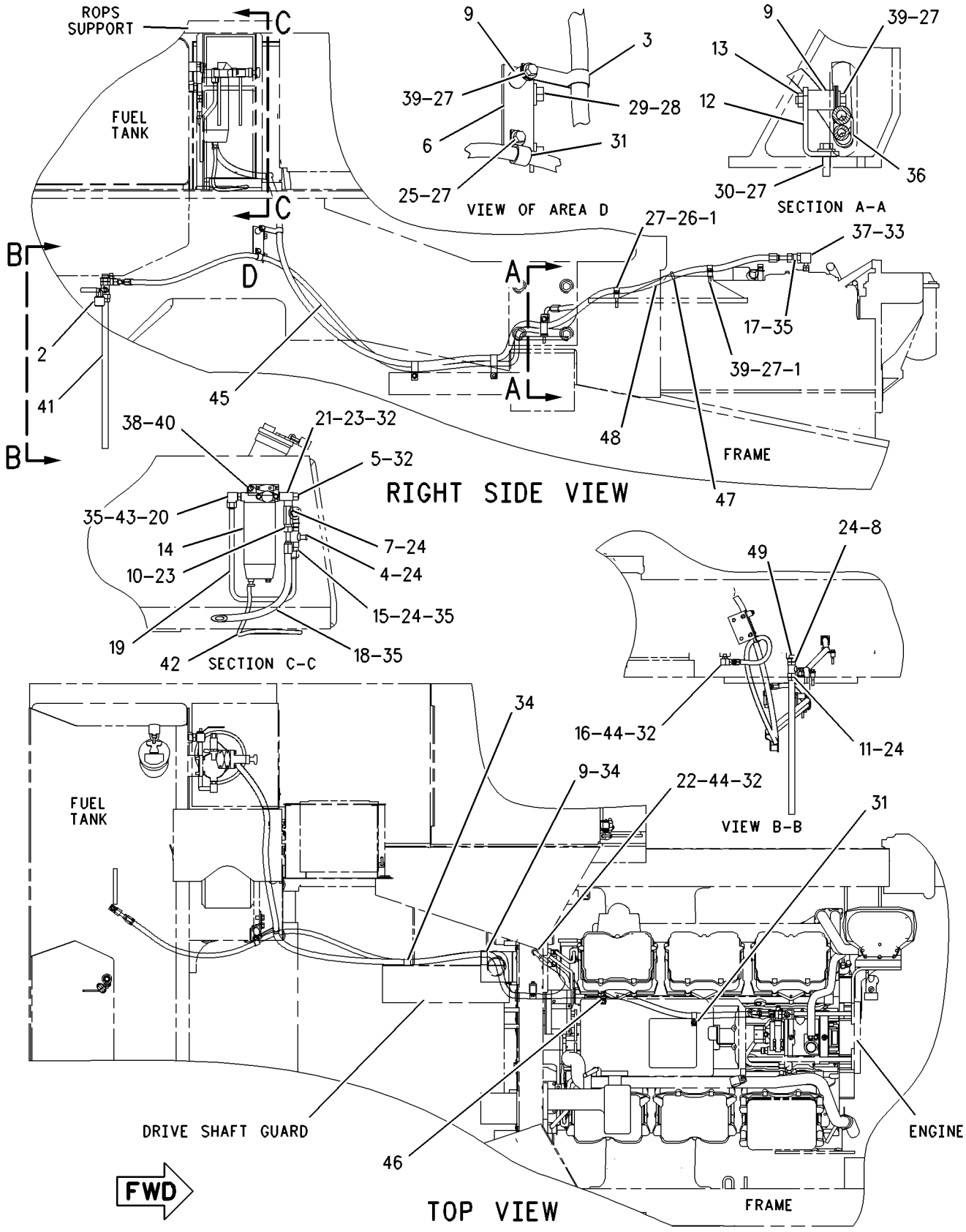

GRAPHIC #1 g00733134

FUEL SYSTEM

131-0463 FILTER GP-WATER SEP & FUEL

S/N: 3KR1-1006

PART OF 132-5313 PUMP GP-FUEL PRIMING

SMCS-1261, 1263 **i01740981**

NOTE	REF NO	GRAPHIC REF	PART NUMBER	QTY	PART NAME 1 2 3 4 5 6 (PRODUCT LEVEL)	SEE PAGE
	1	1	**128-8557**	1	BASE AS-FILTER	
		1	**7E-5346**	1	VALVE AS	
		1	**9S-4167**	1	STUD-HOLLOW	
J	2	1	**129-0372**	1	FILTER AS-WATER SEP & FUEL (PRIMARY)	
		1	**129-0373**	1	ELEMENT-FILTER	
		1	**129-0375**	1	BOWL AS-WATER COLLECTION	
	3	1	**9S-8002**	4	PLUG	
	4	1	**6V-5048**	4	SEAL-O-RING	
					AVAILABLE REPAIR KIT(S):	
J			**141-0284**		KIT-FUEL FILTER & WATER SEP	
					(INCLUDES SEAL TOP AND GASKET)	

J-PART MARKED J INCLUDES KIT MARKED J

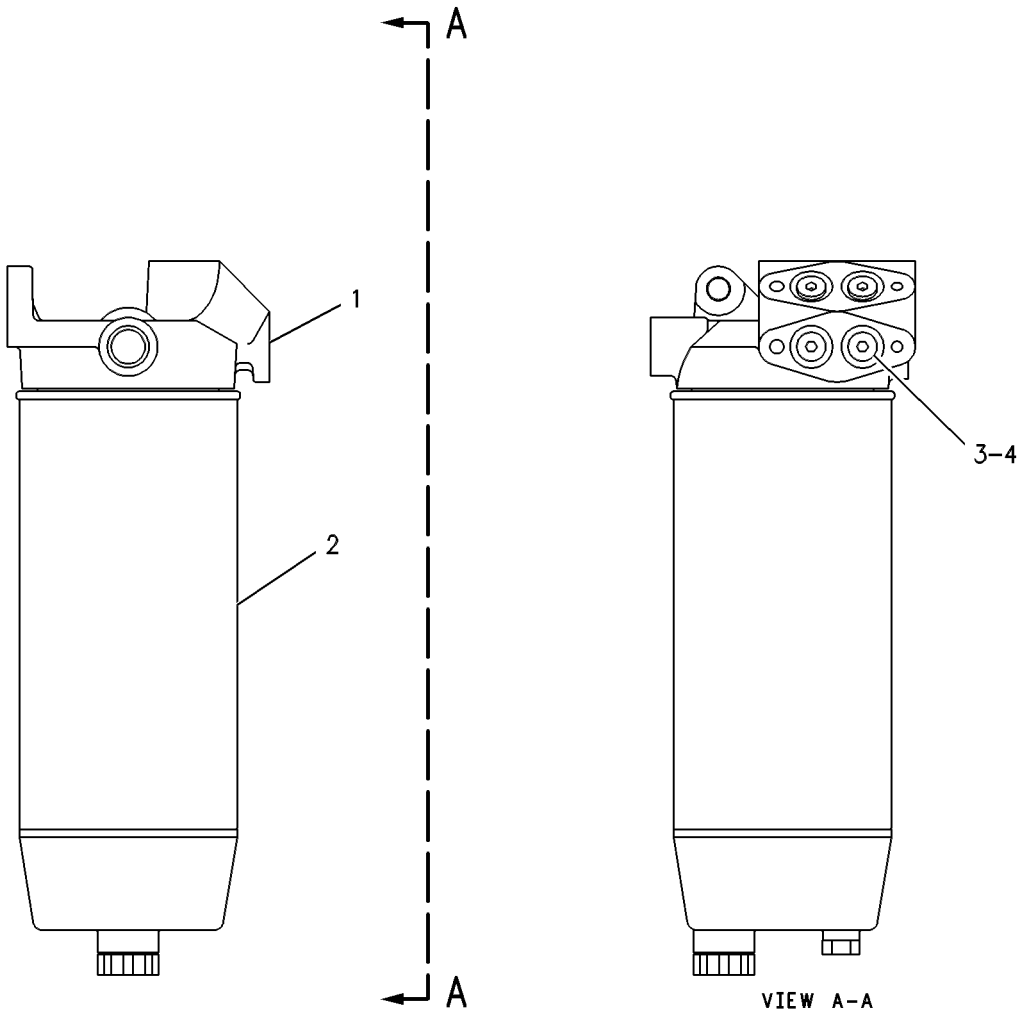

GRAPHIC #1 g00121760

FUEL SYSTEM

176-5618 FILTER GP-WATER SEP & FUEL

S/N: 3KR1463-UP

PART OF 185-9977 FILTER GP-WATER SEP & FUEL

SMCS-1261, 1263 **i01741063**

NOTE	REF NO	GRAPHIC REF	PART NUMBER	QTY	PART NAME 1 2 3 4 5 6 (PRODUCT LEVEL)	SEE PAGE
	1	1	**1R-0769**	1	FILTER AS (WATER SEPARATOR & FUEL)	
	2	1	**173-7126**	1	BOWL AS	
		1	**5F-9144**	1	SEAL-O-RING	
		1	**6V-5049**	1	SEAL-O-RING	

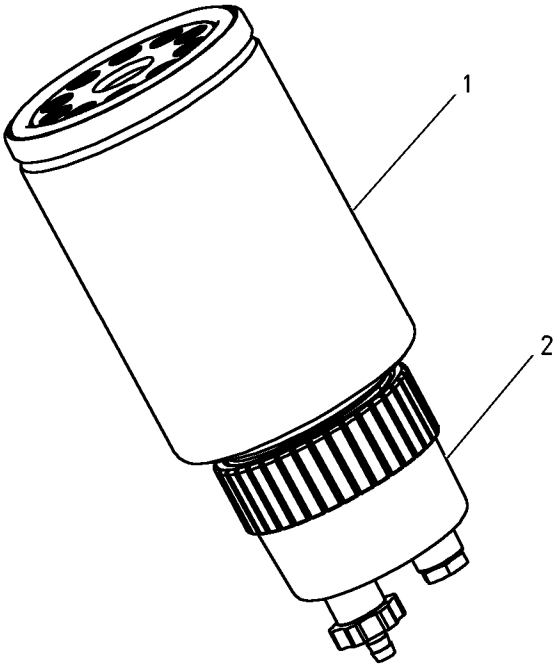

GRAPHIC #1 g00691582

FUEL SYSTEM

185-9977 FILTER GP-WATER SEP & FUEL

S/N: 3KR1463-UP

PART OF 149-9936 FILTER GP-FUEL

SMCS-1261, 1263 **i01446471**

NOTE	REF NO	GRAPHIC REF	PART NUMBER	QTY	PART NAME 1 2 3 4 5 6 (PRODUCT LEVEL)	SEE PAGE
	1	1	**1P-0436**	1	GASKET (FUEL PRIMING PUMP)	
Y	2	1	**176-5618**	1	FILTER GP-WATER SEP & FUEL	253
J	3	1	**105-2508**	1	PUMP AS-FUEL PRIMING	
	4	1	**128-8557**	1	BASE AS-FILTER	
		1	**7E-5346**	1	VALVE AS	
		1	**9S-4167**	1	STUD-HOLLOW	
	5	1	**9S-8002**	4	PLUG-O-RING (7/16-20 THD)	
	6	1	**1B-7182**	1	BOLT (5/16-18X1.25 IN)	
	7	1	**5P-0537**	1	WASHER-HARD (7.2X14.5X2MM THK)	
	8	1	**6V-5048**	4	SEAL-O-RING (8.92MM ID)	
	9	1	**7B-2742**	1	BOLT (1/4-20X1.25 IN)	
	10	1	**9M-1974**	1	WASHER-HARD (8.8X16X2MM THK)	

J-THE INDIVIDUAL PARTS OF THIS ASSEMBLY ARE NOT SERVICED SEPARATELY
Y-SEPARATE ILLUSTRATION

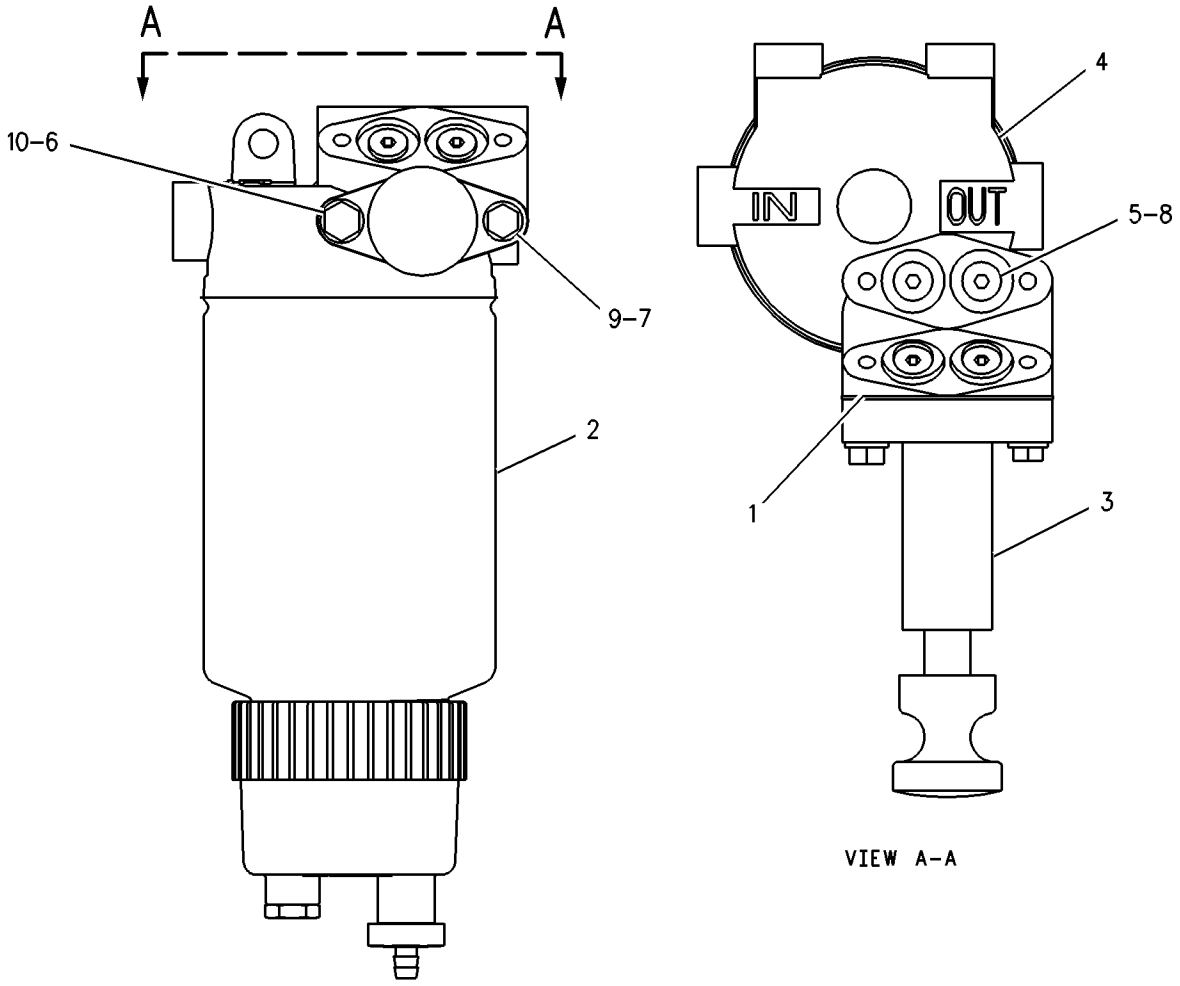

GRAPHIC #1 g00687313

FUEL SYSTEM

111-7916 INJECTOR GP-FUEL

S/N: 80M1-UP

PART OF 108-7090 PUMP GP-FUEL INJECTION

ALSO AN ATTACHMENT

SMCS-1254, 1290, 1713 **i00107664**

NOTE	REF NO	GRAPHIC REF	PART NUMBER	QTY	PART NAME 1 2 3 4 5 6 (PRODUCT LEVEL)	SEE PAGE
	1	1	**6L-1596**	2	BOLT	
	2	1	**115-3598**	1	ADAPTER-INJECTION	
	3	1	**116-7222**	1	SEAL-RECTANGULAR	
	4	1	**131-3098**	1	INJECTOR GP-FUEL	

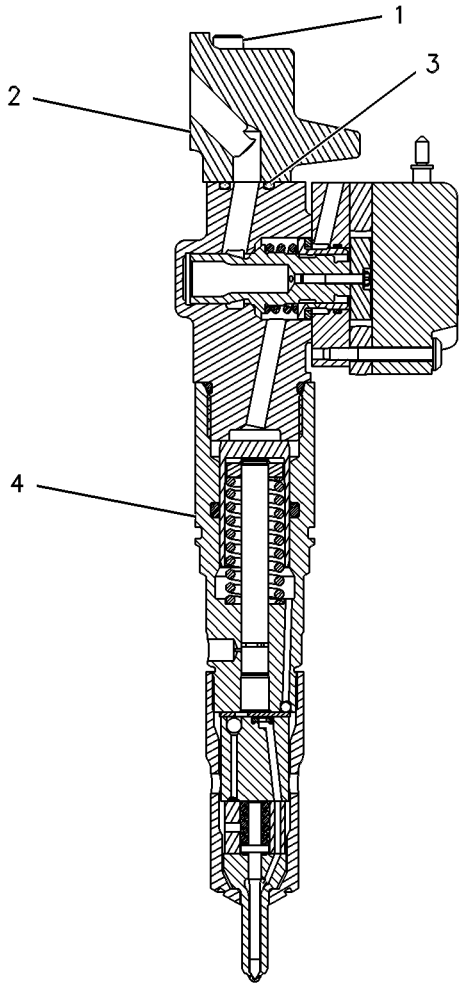

GRAPHIC #1 g00087144

FUEL SYSTEM

138-8756 INJECTOR GP-FUEL

S/N: 80M1048-2331
PART OF 108-7090 PUMP GP-FUEL INJECTION
ALSO AN ATTACHMENT

SMCS-1254, 1290, 1713 **i00553732**

NOTE	REF NO	GRAPHIC REF	PART NUMBER	QTY	PART NAME 1 2 3 4 5 6 (PRODUCT LEVEL)	SEE PAGE
	1	1	**136-1869**	2	BOLT-SOCKET HEAD	
	2	1	**115-3598**	1	ADAPTER-INJECTION	
	3	1	**116-7222**	1	SEAL-RECTANGULAR	
	4	1	**138-8754**	1	INJECTOR GP-FUEL	

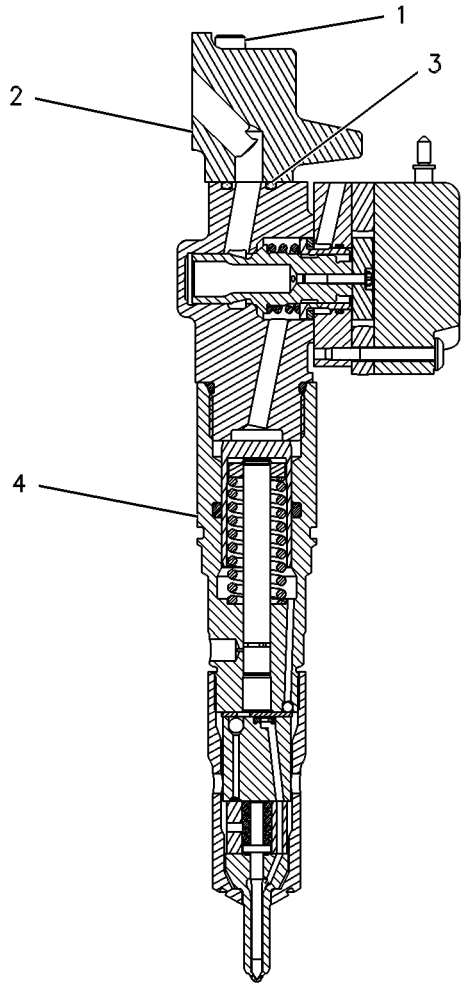

GRAPHIC #1 g00087144

FUEL SYSTEM

159-0836 INJECTOR GP-FUEL

S/N: 80M2332-2882
PART OF 108-7090 PUMP GP-FUEL INJECTION
ALSO AN ATTACHMENT

SMCS-1254, 1290, 1713 **i00945331**

NOTE	REF NO	GRAPHIC REF	PART NUMBER	QTY	PART NAME 1 2 3 4 5 6 (PRODUCT LEVEL)	SEE PAGE
	1	1	**115-3598**	1	ADAPTER-INJECTION	
	2	1	**116-7222**	1	SEAL-RECTANGULAR	
	3	1	**136-1869**	2	BOLT-SOCKET HEAD	
R	4	1	**159-0835**	1	INJECTOR GP-FUEL	

R-REMFG PART MAY BE AVAILABLE

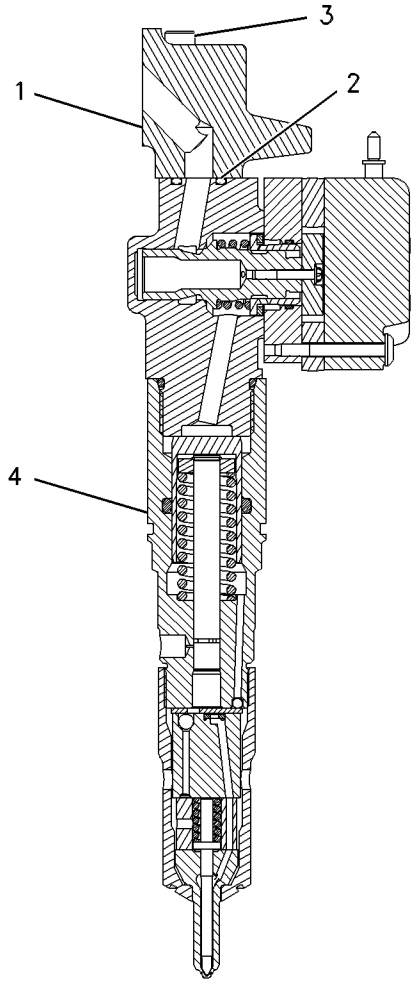

GRAPHIC #1 g00469805

FUEL SYSTEM

174-7527 INJECTOR GP-FUEL

S/N: 80M2883-4651
PART OF 108-7090 PUMP GP-FUEL INJECTION
ALSO AN ATTACHMENT

SMCS-1254, 1290, 1713 **i01110682**

NOTE	REF NO	GRAPHIC REF	PART NUMBER	QTY	PART NAME 1 2 3 4 5 6 (PRODUCT LEVEL)	SEE PAGE
	1	1	**115-3598**	1	ADAPTER-INJECTION	
	2	1	**116-7222**	1	SEAL-RECTANGULAR	
	3	1	**136-1869**	2	BOLT-SOCKET HEAD	
	4	1	**174-7526**	1	INJECTOR GP-FUEL	

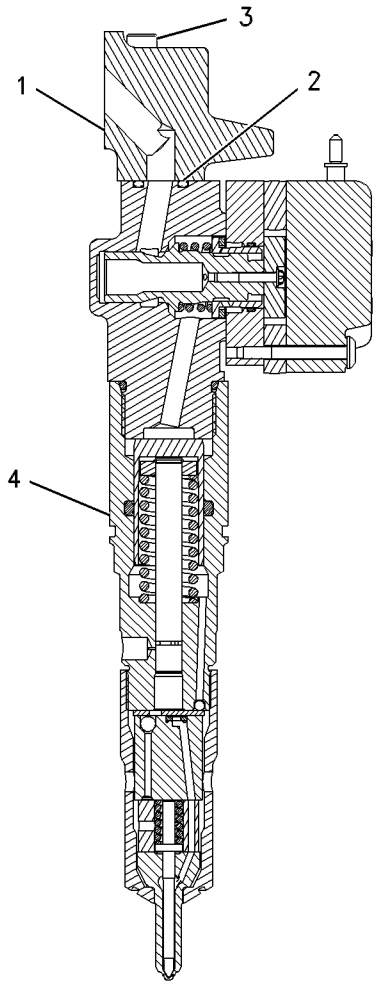

GRAPHIC #1 g00586359

FUEL SYSTEM

198-7912 INJECTOR GP-FUEL

S/N: 80M4652-UP
PART OF 206-2630 PUMP GP-FUEL INJECTION
ALSO AN ATTACHMENT

SMCS-1254, 1290, 1713 **i01713471**

NOTE	REF NO	GRAPHIC REF	PART NUMBER	QTY	PART NAME 1 2 3 4 5 6 (PRODUCT LEVEL)	SEE PAGE
	1	1	**115-3598**	1	ADAPTER-INJECTION	
	2	1	**116-7222**	1	SEAL-RECTANGULAR	
	3	1	**136-1869**	2	BOLT-SOCKET HEAD	

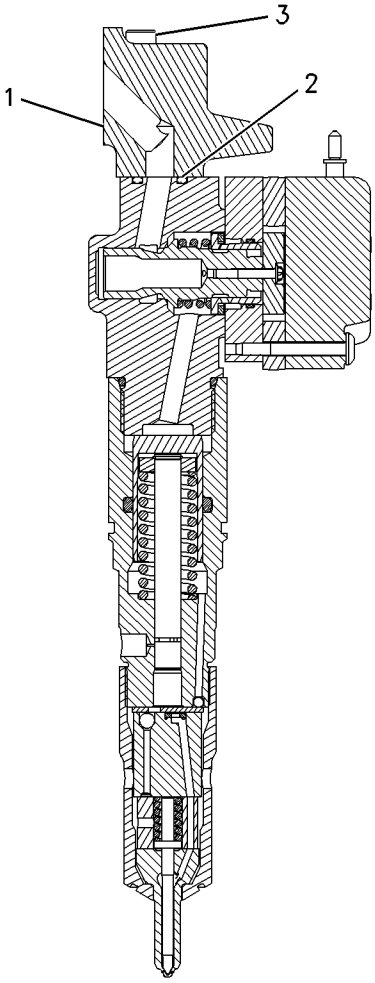

GRAPHIC #1 g00881713

FUEL SYSTEM

138-6256 KIT-SEAL

S/N: 80M596-UP

PART OF 134-9405, 144-0835, 169-1034, 201-4202 PUMP GP-UNIT INJECTOR HYD

ALSO AN ATTACHMENT

SMCS-1714 **i01229048**

NOTE	REF NO	GRAPHIC REF	PART NUMBER	QTY	PART NAME 1 2 3 4 5 6 (PRODUCT LEVEL)	SEE PAGE
	1	1	**109-9685**	4	SEAL-O-RING (6.07MM ID)	
	2	1	**033-5853**	3	SEAL-O-RING (8.92MM ID)	
	3	1	**109-3206**	1	SEAL-O-RING (10.52MM ID)	
	4	1	**033-6042**	4	SEAL-O-RING (11.89MM ID)	
	5	1	**108-5803**	1	SEAL-O-RING (7.65MM ID)	
	6	1	**6V-5142**	2	SEAL-O-RING (15.6MM ID)	
	7	1	**9X-7680**	6	SEAL-O-RING (7.65MM ID)	
	8	1	**033-6027**	2	SEAL-O-RING (19.18MM ID)	
	9	1	**033-6039**	1	SEAL-O-RING (9.25MM ID)	
	10	1	**133-1705**	1	GASKET-HOUSING	
	11	1	**6V-8676**	1	SEAL-O-RING (48.90MM ID)	
	12	1	**135-2655**	2	SEAL-O-RING (55.24MM ID)	
	13	1	**135-2652**	1	SEAL-O-RING (17.17MM ID)	

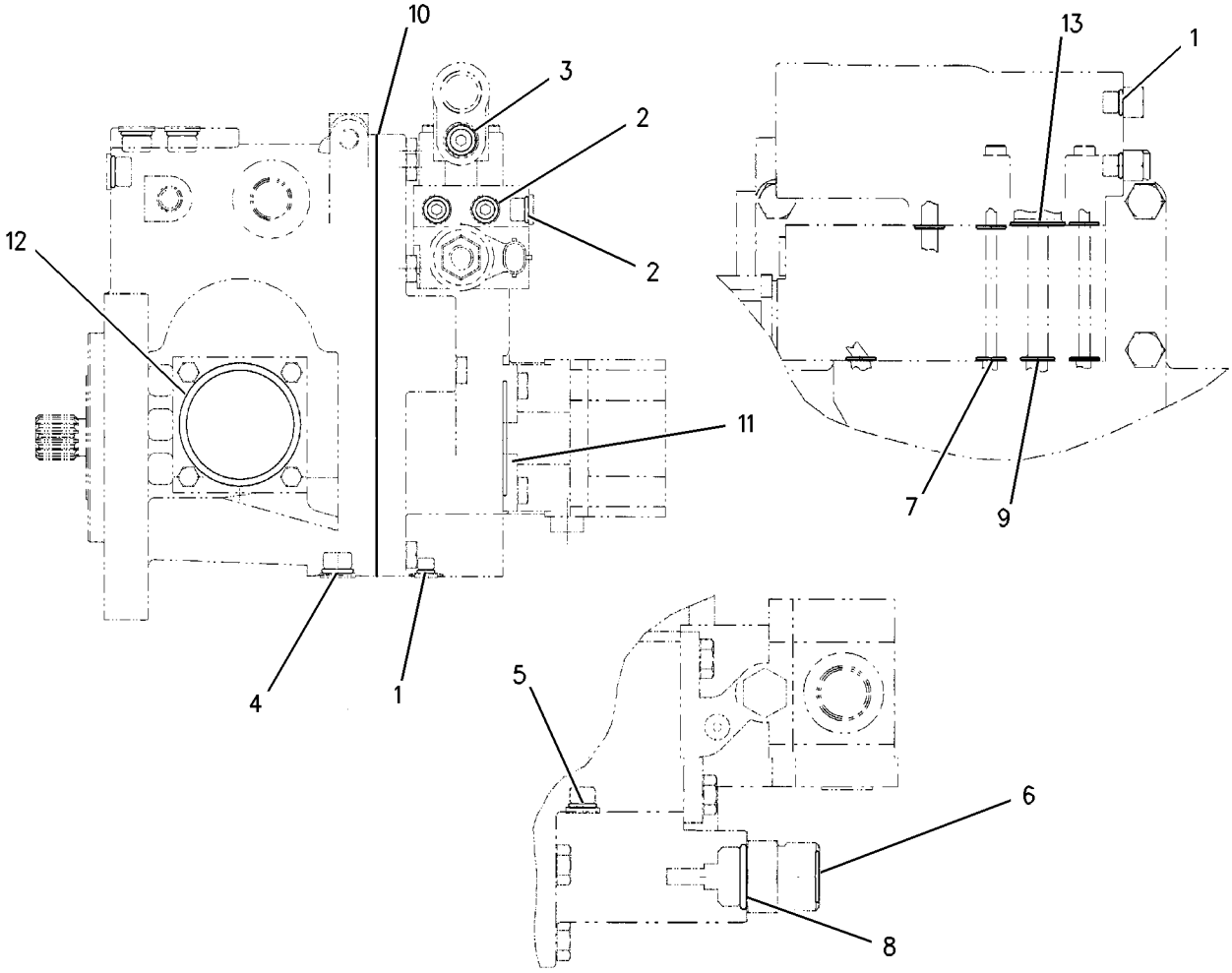

GRAPHIC #1 g00642811

MEMORANDA

FUEL SYSTEM

114-9002 LINES GP-FUEL

S/N: 3KR1-1006

SMCS-1274 **i01741064**

NOTE	REF NO	GRAPHIC REF	PART NUMBER	QTY	PART NAME 1 2 3 4 5 6 (PRODUCT LEVEL)	SEE PAGE
	1	1	**7S-1912**	3	CLIP	
	2	1	**5P-8502**	1	PADLOCK GP	
		1	**5P-8500**	1	KEY	
		1	**8Y-6364**	1	SLEEVE	
E	3	1	**5P-1695**		HOSE (60CM)	
	4	1	**033-6783**	1	FITTING	
	5	1	**6T-7774**	1	SCREEN-FUEL TANK	
	6	1	**5P-2228**	2	BOLT (1/2-13X1 IN)	
	7	1	**5P-1076**	2	WASHER-HARD (13.5X30X4MM THK)	
	8	1	**4L-6454**	1	BOLT (3/8-16X1 IN)	
	9	1	**5P-1075**	6	WASHER-HARD (10.2X22.5X3MM THK)	
	10	1	**8T-3491**	1	ELBOW	
	11	1	**5S-7382**	1	BOLT (3/8-16X1.375 IN)	
	12	1	**8T-5050**	1	CONNECTOR	
	13	1	**6V-8398**	2	SEAL-O-RING	
	14	1	**3J-1907**	2	SEAL-O-RING	
I	15	1	**119-5117**	1	HOSE AS	
I	16	1	**119-5115**	1	HOSE AS	
	17	1	**8T-6638**	1	VALVE-BALL	
	18	1	**6D-4244**	4	CLIP	
	19	1	**4L-6459**	1	BOLT (3/8-16X2.5 IN)	
	20	1	**2B-0941**	2	SPACER (10.5X19X19MM THK)	
	21	1	**8T-9377**	2	BOLT (3/8-16X2.25 IN)	
	22	1	**6V-8722**	1	ELBOW	
	23	1	**8T-6876**	1	ELBOW	
	24	1	**3K-0360**	1	SEAL-O-RING	
	25	1	**149-5264**	1	VALVE AS	
	26	1	**7J-9108**	2	SEAL-O-RING	
	27	1	**8T-0404**	1	ELBOW	
	28	1	**6V-8358**	1	VALVE-BALL (MANUAL SHUTOFF)	
	29	1	**3D-2824**	6	SEAL-O-RING	
	30	1	**110-5981**	1	BRACKET AS	
	31	1	**1F-0750**	1	NUT-WELD (3/8-16 THD)	
	32	1	**7G-8150**	1	PLATE AS	
	33	1	**1F-0750**	2	NUT-WELD (3/8-16 THD)	
	34	1	**7D-7735**	1	CLIP	
	35	1	**9W-0647**	1	BRACKET AS	
		1	**1F-0750**	1	NUT-WELD (3/8-16 THD)	
	36	1	**5M-3062**	1	BOLT (3/8-16X0.75 IN)	
	37	1	**091-0081**	1	SPACER (10.5X20X10.0MM THK)	
	38	1	**8T-9378**	1	BOLT (3/8-16X4 IN)	

E-ORDER BY THE CENTIMETER
I-SEE HOSE FABRICATION GUIDE

114-9002 **LINES GP-FUEL** *(contd.)* **i01741064**

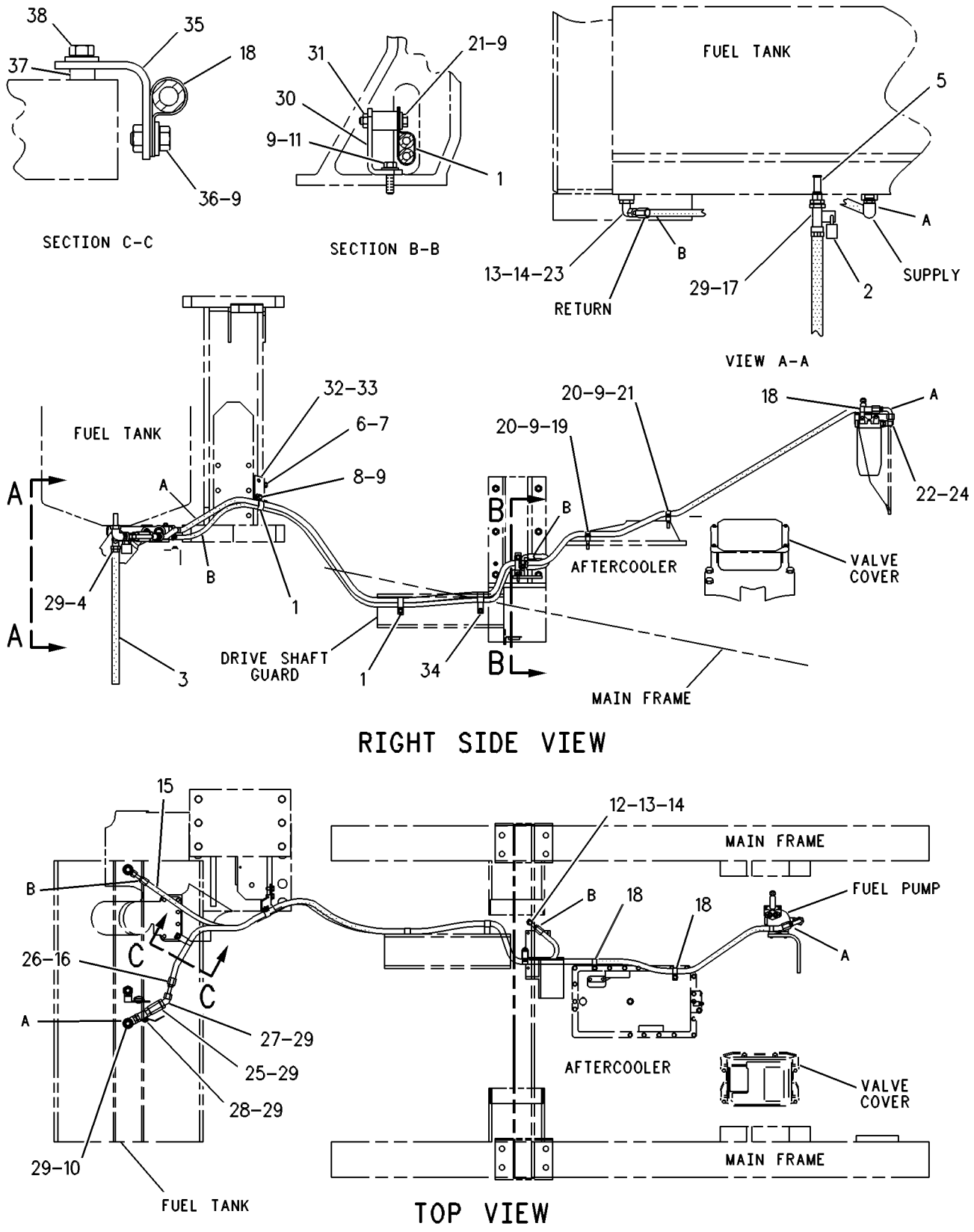

GRAPHIC #1 g00276094

FUEL SYSTEM

128-5107 LINES GP-FUEL FILTER

S/N: 80M1-UP

PART OF 115-7641, 135-7810, 155-0058 ENGINE AR

ALSO AN ATTACHMENT

SMCS-1261, 1274 **i01501798**

NOTE	REF NO	GRAPHIC REF	PART NUMBER	QTY	PART NAME 1 2 3 4 5 6 (PRODUCT LEVEL)	SEE PAGE
	1	1	**098-5687**	1	TEE	
I	2	1	**125-6796**	1	HOSE AS	
	3	1	**6S-9720**	1	BRACKET	
I	4	1	**138-8745**	1	HOSE AS	
	5	1	**128-6611**	1	TUBE AS	
I	6	1	**125-6797**	1	HOSE AS	
	7	1	**116-5819**	1	BRACKET	
	8	1	**121-6766**	1	TUBE AS	
	9	1	**0S-0509**	1	BOLT (3/8-16X0.75 IN)	
I	10	1	**112-9265**	1	HOSE AS	
	11	1	**128-7135**	1	HOSE AS	
	12	1	**9S-4182**	1	PLUG-O-RING	
	13	1	**6V-8636**	3	CONNECTOR	
	14	1	**6V-5049**	17	SEAL-O-RING	
	15	1	**8L-2779**	8	SEAL-O-RING	
	16	1	**9S-8004**	4	PLUG	
	17	1	**9M-1974**	3	WASHER-HARD (8.8X16X2MM THK)	
	18	1	**9S-4191**	4	PLUG-STRAIGHT THREAD	
	19	1	**9S-8752**	1	NUT-FULL (3/8-16 THD)	
	20	1	**102-2240**	1	SENSOR GP-TEMPERATURE (FUEL)	
		1	**102-8803**	1	KIT-RECEPTACLE (3 PIN)	
					(INCLUDES RECEPTACLE AS & WEDGE)	
		1	**3E-3371**	1	WEDGE-RECEPTACLE LOCK (3 PIN)	
		1	**8T-8729**	3	PIN-CONNECTOR	
BE		1	**9X-1813**		SLEEVE	
	21	1	**8L-2786**	3	SEAL-O-RING	
	22	1	**6V-8634**	1	CONNECTOR	
	23	1	**0S-1594**	2	BOLT (3/8-16X1 IN)	
	24	1	**9X-6458**	3	WASHER-HARD (10.2X22.5X3MM THK)	
	25	1	**6V-9873**	2	CONNECTOR-SEAL	
	26	1	**0L-1351**	1	BOLT (3/8-16X0.875 IN)	
	27	1	**033-6033**	4	SEAL-O-RING	
	28	1	**1B-9575**	2	BOLT (5/16-18X1.75 IN)	
Y	29	1	**102-7535**	1	VALVE GP-PRESSURE CONTROL	314
	30	1	**8T-6876**	2	ELBOW	
	31	1	**4B-0418**	2	CLIP	
	32	1	**123-0555**	1	MANIFOLD	
	33	1	**3S-2093**	1	STRAP-CABLE	
	34	1	**122-0097**	1	SUPPORT AS	
	35	1	**0S-1588**	1	BOLT (3/8-16X1.25 IN)	
	36	1	**5M-2894**	4	WASHER-HARD (10.2X18.5X2.5MM THK)	
	37	1	**1R-0749**	2	FILTER AS-FUEL	
	38	1	**6N-2946**	1	BASE AS-FUEL FILTER	
		1	**6V-5049**	1	SEAL-O-RING	
		1	**9S-4167**	2	STUD-HOLLOW	
		1	**9S-8004**	1	PLUG	
	39	1	**6N-4414**	1	COVER-FILTER BASE	
	40	1	**1P-0436**	1	GASKET (FUEL PRIMING PUMP)	
	41	1	**7B-2742**	1	BOLT (1/4-20X1.25 IN)	
	42	1	**5P-0537**	1	WASHER-HARD (7.2X14.5X2MM THK)	
	43	1	**1B-2790**	1	BOLT (5/16-18X1.375 IN)	
	44	1	**6V-5048**	1	SEAL-O-RING	
	45	1	**6V-8724**	2	ELBOW (90 DEGREE)	
	46	1	**8M-2773**	1	CLIP	
	47	1	**0S-1608**	1	BOLT (3/8-16X3.75 IN)	

128-5107 LINES GP-FUEL FILTER *(contd.)* i01501798

NOTE	REF NO	GRAPHIC REF	PART NUMBER	QTY	PART NAME 1 2 3 4 5 6 (PRODUCT LEVEL)	SEE PAGE
	49	1	**8B-6561**	1	SPACER	

B-USE AS REQUIRED
E-ORDER BY THE CENTIMETER
I-SEE HOSE FABRICATION GUIDE
Y-SEPARATE ILLUSTRATION

128-5107 **LINES GP-FUEL FILTER** *(contd.)* **i01501798**

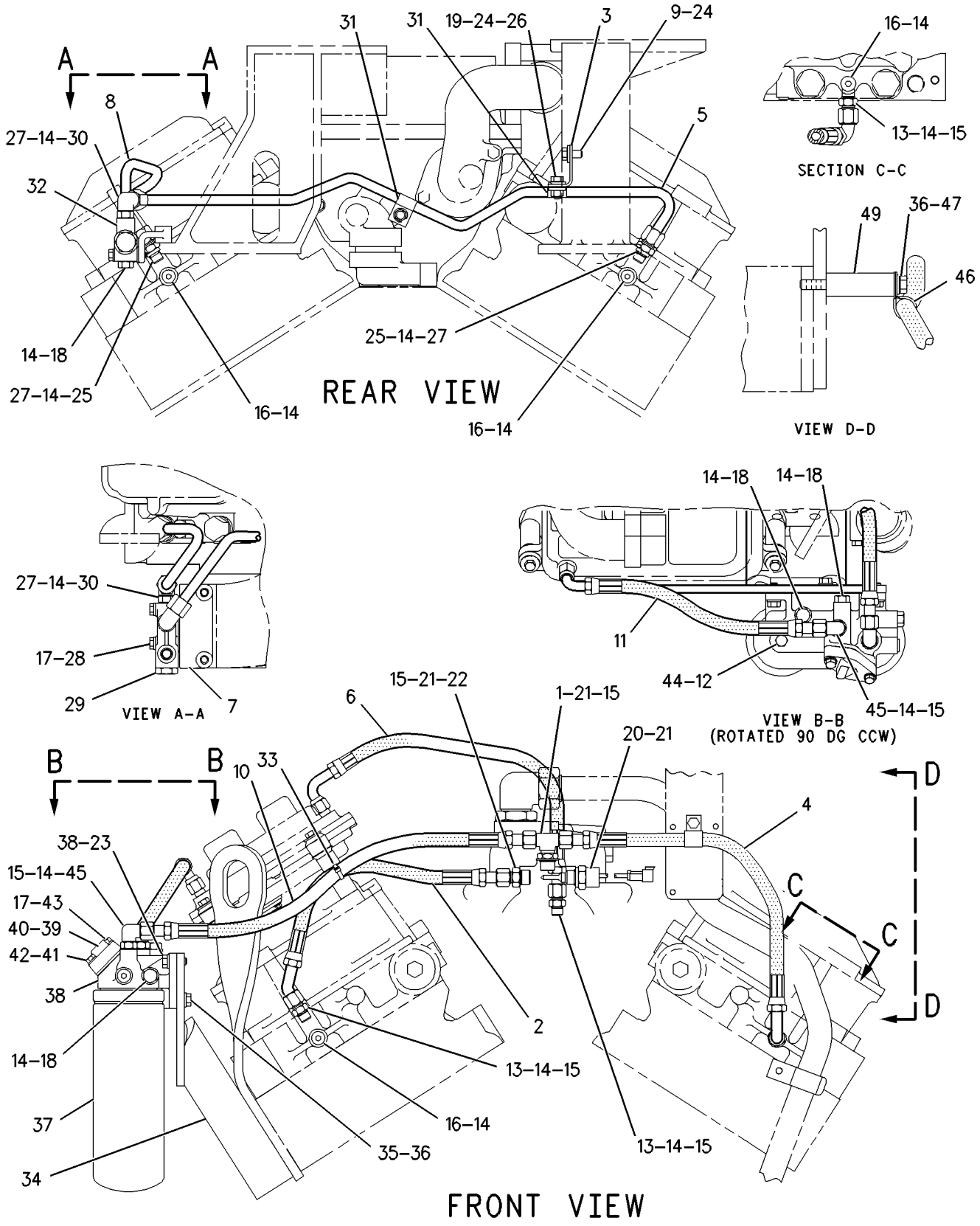

GRAPHIC #1 g00781908

MEMORANDA

FUEL SYSTEM

121-4034 LINES GP-INJECTOR HYD PUMP

S/N: 80M1-UP

PART OF 115-7641, 135-7810, 155-0058 ENGINE AR

ALSO AN ATTACHMENT

SMCS-1307 **i01490358**

NOTE	REF NO	GRAPHIC REF	PART NUMBER	QTY	PART NAME 1 2 3 4 5 6 (PRODUCT LEVEL)	SEE PAGE
	1	1	**107-3202**	1	TUBE AS	
	2	1	**117-9650**	1	TUBE AS	
	3	1	**0S-1588**	1	BOLT (3/8-16X1.25 IN)	
	4	1	**0L-1143**	2	BOLT (3/8-16X2.50 IN)	
	5	1	**9L-9132**	1	WASHER (10.2X25.5X2.5MM THK)	
	6	1	**4N-0933**	1	GASKET	
	7	1	**6V-9009**	1	ELBOW	
	8	1	**5P-7815**	1	SEAL-O-RING	
	9	1	**9X-7734**	1	SEAL-O-RING	
	10	1	**6V-8626**	1	ELBOW	
	11	1	**152-2939**	2	SEAL-O-RING	
	12	1	**152-2938**	4	SEAL-O-RING	
	13	1	**6V-5134**	1	SEAL-O-RING	
I	14	1	**162-2501**	1	HOSE AS	
	15	1	**6V-9003**	1	ELBOW	
	16	1	**113-1921**	1	ELBOW	
	17	1	**8S-0023**	1	CLIP (SLOT)	
	18	1	**8S-0024**	1	CLIP (TAB)	
B	19	1	**3K-1470**	1	SPACER	

B-USE AS REQUIRED
I-SEE HOSE FABRICATION GUIDE

121-4034 **LINES GP-INJECTOR HYD PUMP** *(contd.)* **i01490358**

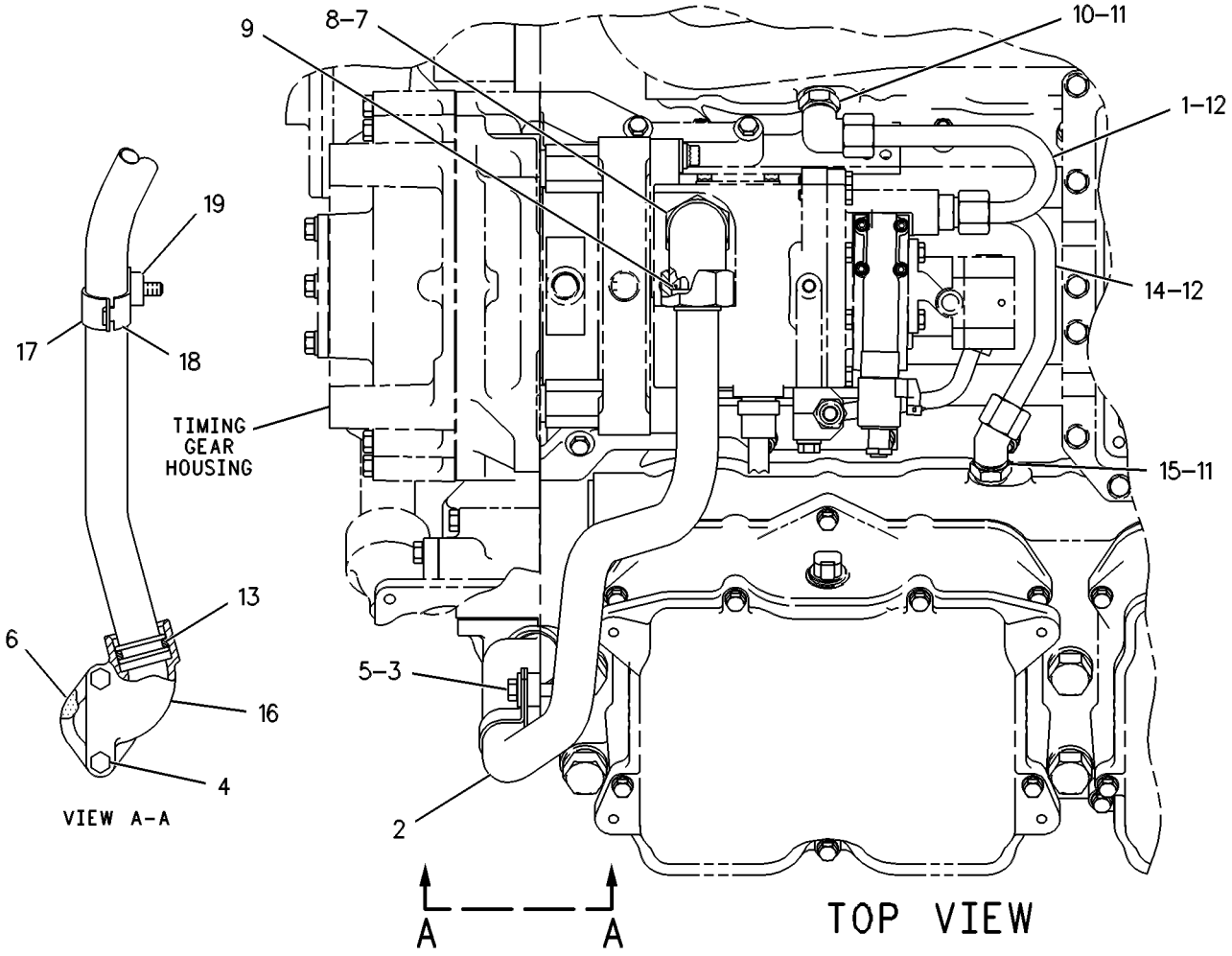

GRAPHIC #1 g00086476

FUEL SYSTEM

126-7292 PUMP & MTG GP-UNIT INJ HYD

S/N: 80M1-153
PART OF 115-7641, 135-7810 ENGINE AR
ALSO AN ATTACHMENT

SMCS-1714 **i01741068**

NOTE	REF NO	GRAPHIC REF	PART NUMBER	QTY	PART NAME 1 2 3 4 5 6 (PRODUCT LEVEL)	SEE PAGE
	1	1	**5P-5855**	3	BOLT-12 POINT HEAD (1/2-13X1.75 IN)	
	2	1	**5P-8245**	3	WASHER-HARD (13.5X25.5X3MM THK)	
Y	3	1	*125-3225*	1	PUMP GP-UNIT INJECTOR HYD	294
	4	1	**0S-1617**	4	BOLT (5/16-18X0.75 IN)	
	5	1	**9M-1974**	4	WASHER-HARD (8.8X16X2MM THK)	
	6	1	**118-8157**	1	SUPPORT-PUMP	
	7	1	**6V-1197**	1	SEAL-O-RING	
Y	8	1	**103-6092**	1	SENSOR GP-PRESSURE (ENGINE OIL)	454
	9	1	**9X-0262**	1	ADAPTER	
	10	1	**6V-5048**	2	SEAL-O-RING	
Y	11	1	**106-0735**	1	SENSOR GP-TEMPERATURE (ENGINE OIL)	468
	12	1	**8L-2786**	2	SEAL-O-RING	
	13	1	**4P-0707**	2	CLAMP AS	
	14	1	**0L-2070**	1	BOLT (3/8-16X2.25 IN)	
	15	1	**5M-2894**	1	WASHER-HARD (10.2X18.5X2.5MM THK)	
	16	1	**8T-1686**	1	ELBOW	
	17	1	**033-6033**	1	SEAL-O-RING	
	18	1	**127-1969**	1	TUBE AS	

Y-SEPARATE ILLUSTRATION

126-7292 **PUMP & MTG GP-UNIT INJ HYD** *(contd.)* **i01741068**

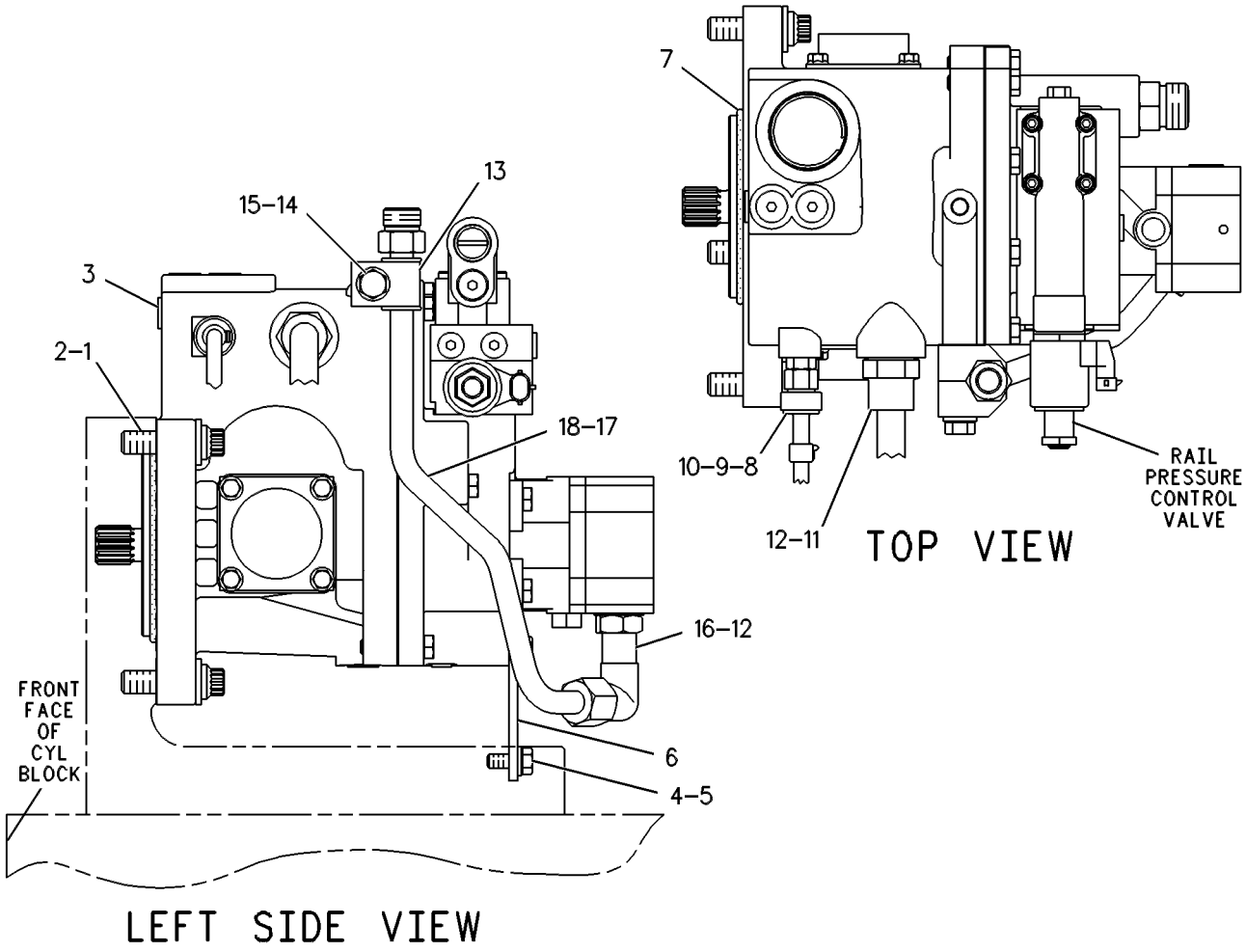

GRAPHIC #1 g00086494

FUEL SYSTEM

126-7292 PUMP & MTG GP-UNIT INJ HYD

S/N: 80M154-186
PART OF 115-7641, 135-7810 ENGINE AR
ALSO AN ATTACHMENT

SMCS-1714 **i01741069**

NOTE	REF NO	GRAPHIC REF	PART NUMBER	QTY	PART NAME 1 2 3 4 5 6 (PRODUCT LEVEL)	SEE PAGE
	1	1	**5P-5855**	3	BOLT-12 POINT HEAD (1/2-13X1.75 IN)	
	2	1	**5P-8245**	3	WASHER-HARD (13.5X25.5X3MM THK)	
YC	3	1	*133-1708*	1	PUMP GP-UNIT INJECTOR HYD	296
	4	1	**0S-1617**	4	BOLT (5/16-18X0.75 IN)	
	5	1	**9M-1974**	4	WASHER-HARD (8.8X16X2MM THK)	
	6	1	**118-8157**	1	SUPPORT-PUMP	
	7	1	**6V-1197**	1	SEAL-O-RING	
Y	8	1	**103-6092**	1	SENSOR GP-PRESSURE (ENGINE OIL)	454
	9	1	**9X-0262**	1	ADAPTER	
	10	1	**6V-5048**	2	SEAL-O-RING	
Y	11	1	**106-0735**	1	SENSOR GP-TEMPERATURE (ENGINE OIL)	468
	12	1	**8L-2786**	2	SEAL-O-RING	
	13	1	**4P-0707**	2	CLAMP AS	
	14	1	**0L-2070**	1	BOLT (3/8-16X2.25 IN)	
	15	1	**5M-2894**	1	WASHER-HARD (10.2X18.5X2.5MM THK)	
	16	1	**8T-1686**	1	ELBOW	
	17	1	**033-6033**	1	SEAL-O-RING	
	18	1	**127-1969**	1	TUBE AS	

C-CHANGE FROM PREVIOUS TYPE
Y-SEPARATE ILLUSTRATION

126-7292 **PUMP & MTG GP-UNIT INJ HYD** *(contd.)* **i01741069**

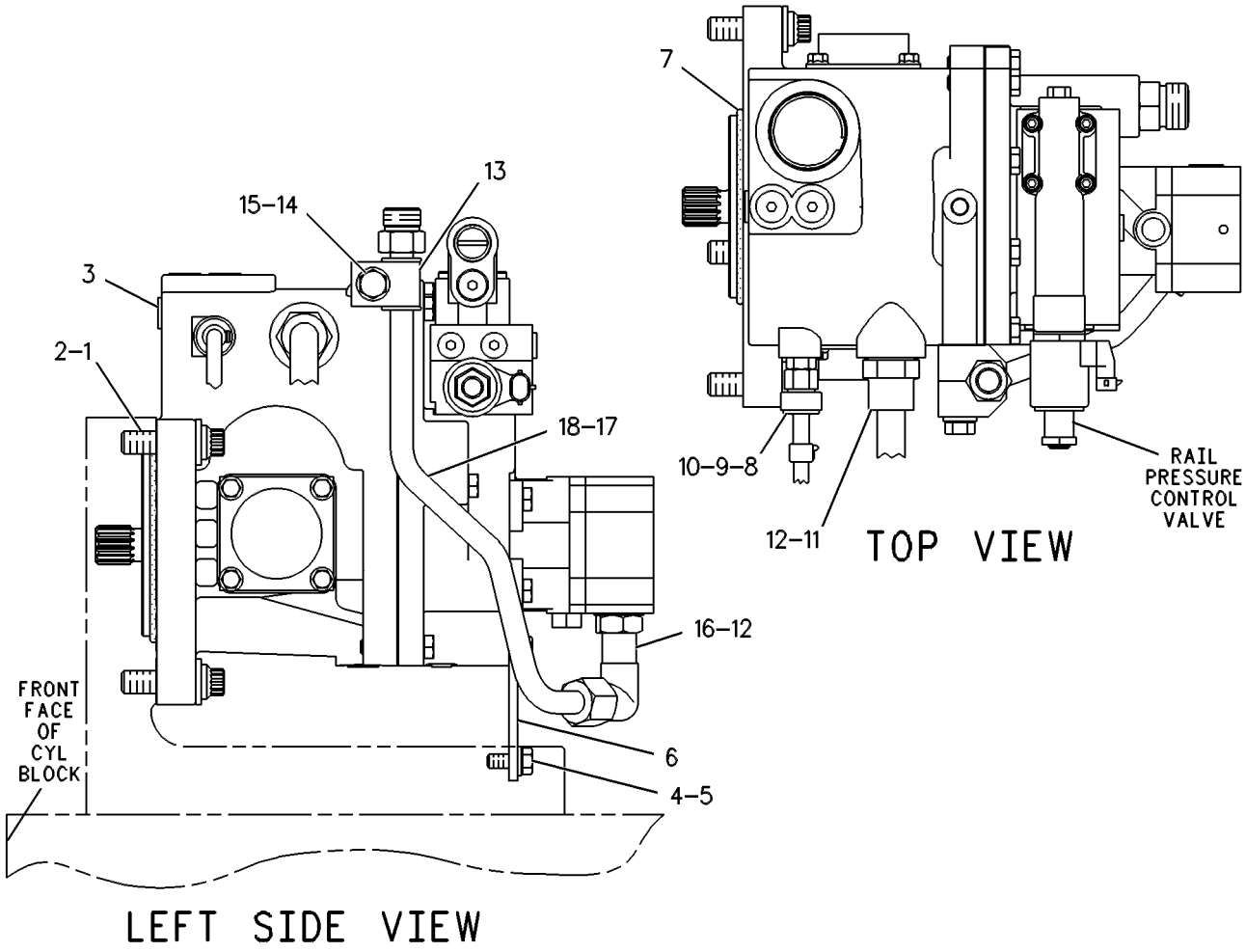

GRAPHIC #1 g00086494

FUEL SYSTEM

126-7292 PUMP & MTG GP-UNIT INJ HYD

S/N: 80M187-595
PART OF 115-7641, 135-7810 ENGINE AR
ALSO AN ATTACHMENT

SMCS-1714 **i01741070**

NOTE	REF NO	GRAPHIC REF	PART NUMBER	QTY	PART NAME 1 2 3 4 5 6 (PRODUCT LEVEL)	SEE PAGE
	1	1	**5P-5855**	3	BOLT-12 POINT HEAD (1/2-13X1.75 IN)	
	2	1	**5P-8245**	3	WASHER-HARD (13.5X25.5X3MM THK)	
CY	3	1	*134-1598*	1	PUMP GP-UNIT INJECTOR HYD	297
	4	1	**0S-1617**	4	BOLT (5/16-18X0.75 IN)	
	5	1	**9M-1974**	4	WASHER-HARD (8.8X16X2MM THK)	
	6	1	**118-8157**	1	SUPPORT-PUMP	
	7	1	**6V-1197**	1	SEAL-O-RING	
Y	8	1	**103-6092**	1	SENSOR GP-PRESSURE (ENGINE OIL)	454
	9	1	**9X-0262**	1	ADAPTER	
	10	1	**6V-5048**	2	SEAL-O-RING	
Y	11	1	**106-0735**	1	SENSOR GP-TEMPERATURE (ENGINE OIL)	468
	12	1	**8L-2786**	2	SEAL-O-RING	
	13	1	**4P-0707**	2	CLAMP AS	
	14	1	**0L-2070**	1	BOLT (3/8-16X2.25 IN)	
	15	1	**5M-2894**	1	WASHER-HARD (10.2X18.5X2.5MM THK)	
	16	1	**8T-1686**	1	ELBOW	
	17	1	**033-6033**	1	SEAL-O-RING	
	18	1	**127-1969**	1	TUBE AS	

C-CHANGE FROM PREVIOUS TYPE
Y-SEPARATE ILLUSTRATION

126-7292 **PUMP & MTG GP-UNIT INJ HYD** *(contd.)* **i01741070**

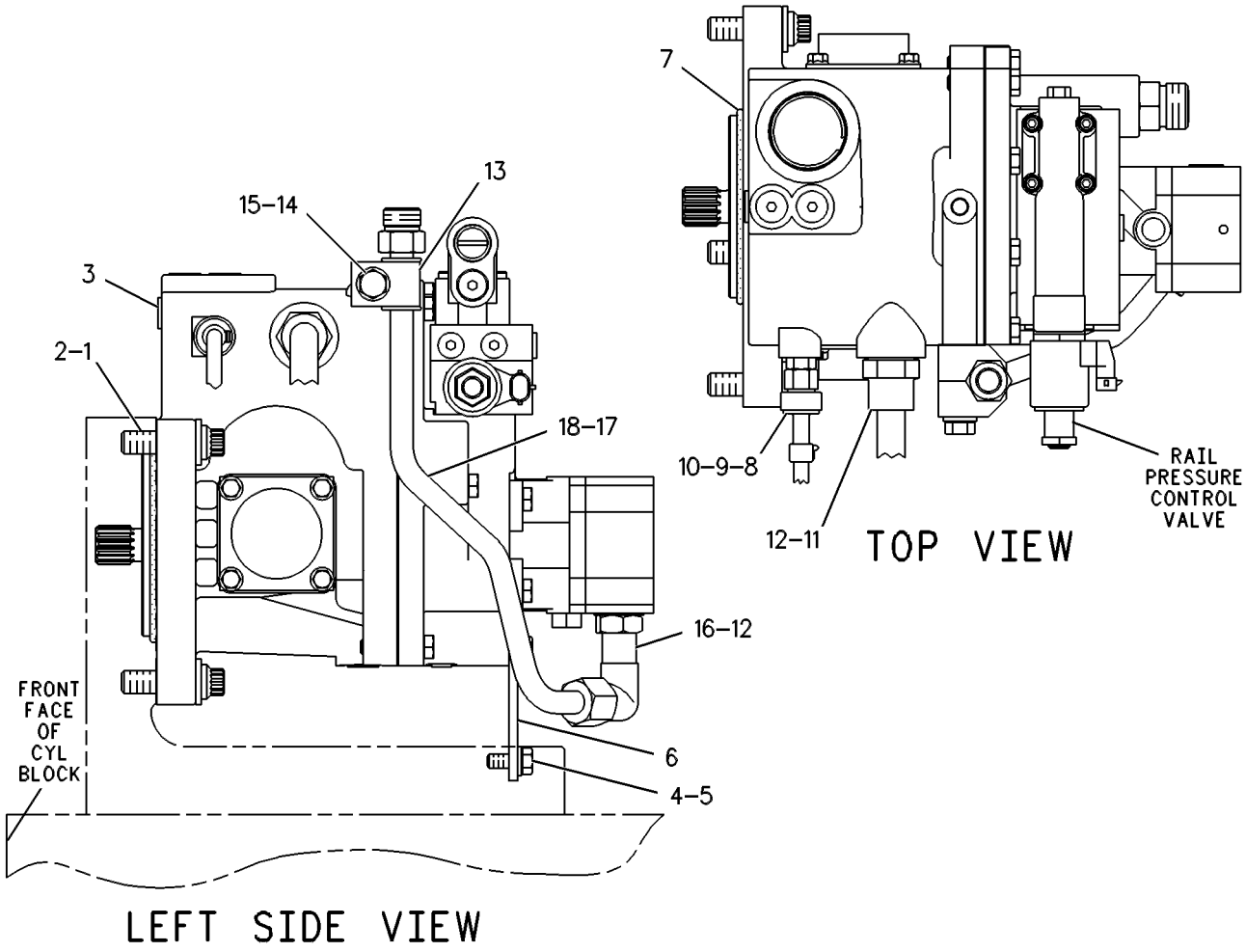

GRAPHIC #1 g00086494

FUEL SYSTEM

126-7292 PUMP & MTG GP-UNIT INJ HYD

S/N: 80M596-1003
PART OF 115-7641, 135-7810 ENGINE AR
ALSO AN ATTACHMENT

SMCS-1714 **i01741071**

NOTE	REF NO	GRAPHIC REF	PART NUMBER	QTY	PART NAME 1 2 3 4 5 6 (PRODUCT LEVEL)	SEE PAGE
	1	1	**5P-5855**	3	BOLT-12 POINT HEAD (1/2-13X1.75 IN)	
	2	1	**5P-8245**	3	WASHER-HARD (13.5X25.5X3MM THK)	
CY	3	1	*134-9405*	1	PUMP GP-UNIT INJECTOR HYD	298
	4	1	**0S-1617**	4	BOLT (5/16-18X0.75 IN)	
	5	1	**9M-1974**	4	WASHER-HARD (8.8X16X2MM THK)	
	6	1	**118-8157**	1	SUPPORT-PUMP	
	7	1	**6V-1197**	1	SEAL-O-RING	
Y	8	1	**103-6092**	1	SENSOR GP-PRESSURE (ENGINE OIL)	454
	9	1	**9X-0262**	1	ADAPTER	
	10	1	**6V-5048**	2	SEAL-O-RING	
Y	11	1	**106-0735**	1	SENSOR GP-TEMPERATURE (ENGINE OIL)	468
	12	1	**8L-2786**	2	SEAL-O-RING	
	13	1	**4P-0707**	2	CLAMP AS	
	14	1	**0L-2070**	1	BOLT (3/8-16X2.25 IN)	
	15	1	**5M-2894**	1	WASHER-HARD (10.2X18.5X2.5MM THK)	
	16	1	**8T-1686**	1	ELBOW	
	17	1	**033-6033**	1	SEAL-O-RING	
	18	1	**127-1969**	1	TUBE AS	

C-CHANGE FROM PREVIOUS TYPE
Y-SEPARATE ILLUSTRATION

126-7292 **PUMP & MTG GP-UNIT INJ HYD** *(contd.)* **i01741071**

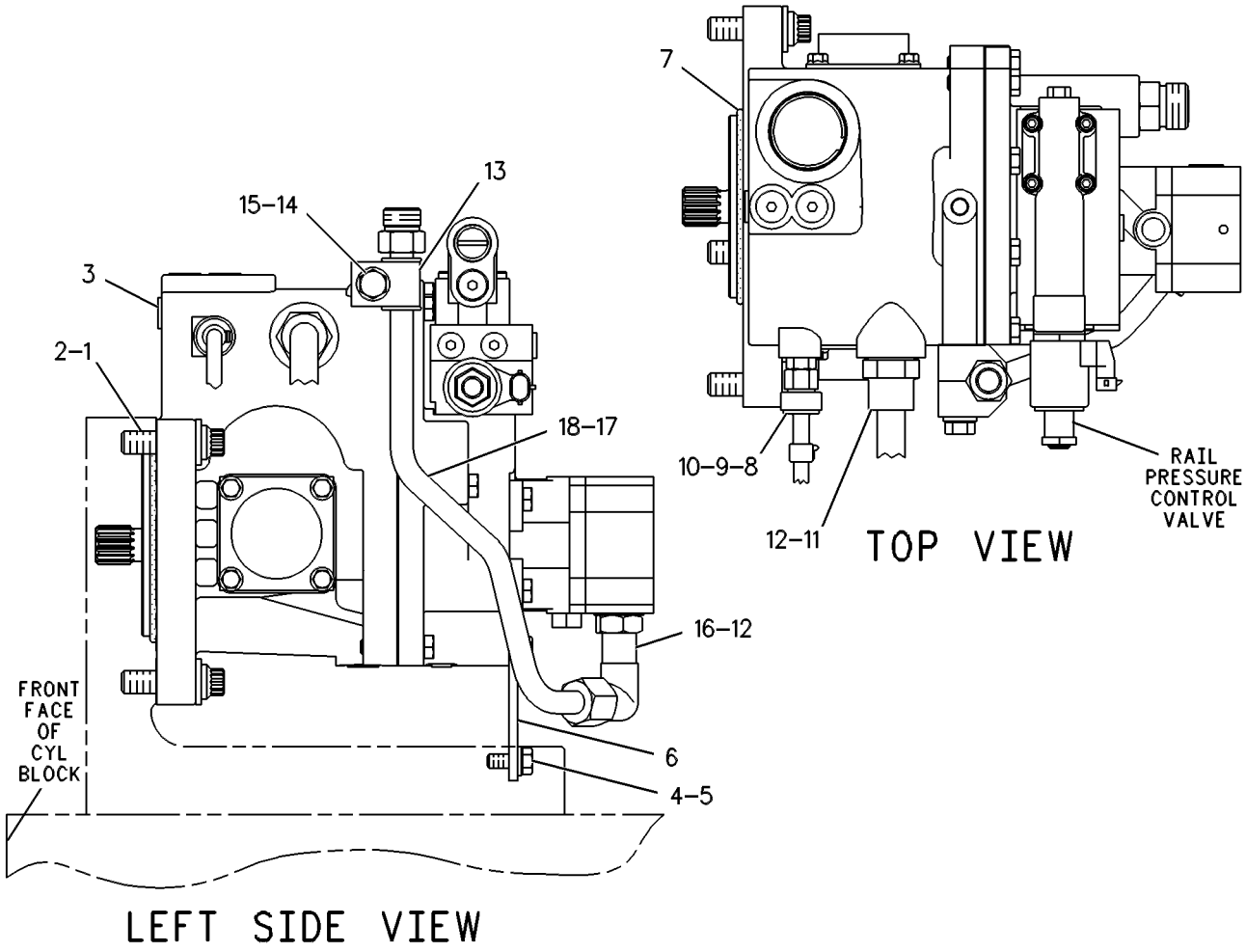

GRAPHIC #1 g00086494

FUEL SYSTEM

126-7292 PUMP & MTG GP-UNIT INJ HYD

S/N: 80M1004-2693
PART OF 115-7641, 135-7810, 155-0058 ENGINE AR
ALSO AN ATTACHMENT

SMCS-1714 **i01741072**

NOTE	REF NO	GRAPHIC REF	PART NUMBER	QTY	PART NAME 1 2 3 4 5 6 (PRODUCT LEVEL)	SEE PAGE
	1	1	**5P-5855**	3	BOLT-12 POINT HEAD (1/2-13X1.75 IN)	
	2	1	**5P-8245**	3	WASHER-HARD (13.5X25.5X3MM THK)	
CY	3	1	**144-0835**	1	PUMP GP-UNIT INJECTOR HYD	300
	4	1	**0S-1617**	4	BOLT (5/16-18X0.75 IN)	
	5	1	**9M-1974**	4	WASHER-HARD (8.8X16X2MM THK)	
	6	1	**118-8157**	1	SUPPORT-PUMP	
	7	1	**6V-1197**	1	SEAL-O-RING	
Y	8	1	**103-6092**	1	SENSOR GP-PRESSURE (ENGINE OIL)	454
	9	1	**9X-0262**	1	ADAPTER	
	10	1	**6V-5048**	2	SEAL-O-RING	
Y	11	1	**106-0735**	1	SENSOR GP-TEMPERATURE (ENGINE OIL)	468
	12	1	**8L-2786**	2	SEAL-O-RING	
	13	1	**4P-0707**	2	CLAMP AS	
	14	1	**0L-2070**	1	BOLT (3/8-16X2.25 IN)	
	15	1	**5M-2894**	1	WASHER-HARD (10.2X18.5X2.5MM THK)	
	16	1	**8T-1686**	1	ELBOW	
	17	1	**033-6033**	1	SEAL-O-RING	
	18	1	**127-1969**	1	TUBE AS	

C-CHANGE FROM PREVIOUS TYPE
Y-SEPARATE ILLUSTRATION

126-7292 **PUMP & MTG GP-UNIT INJ HYD** *(contd.)* **i01741072**

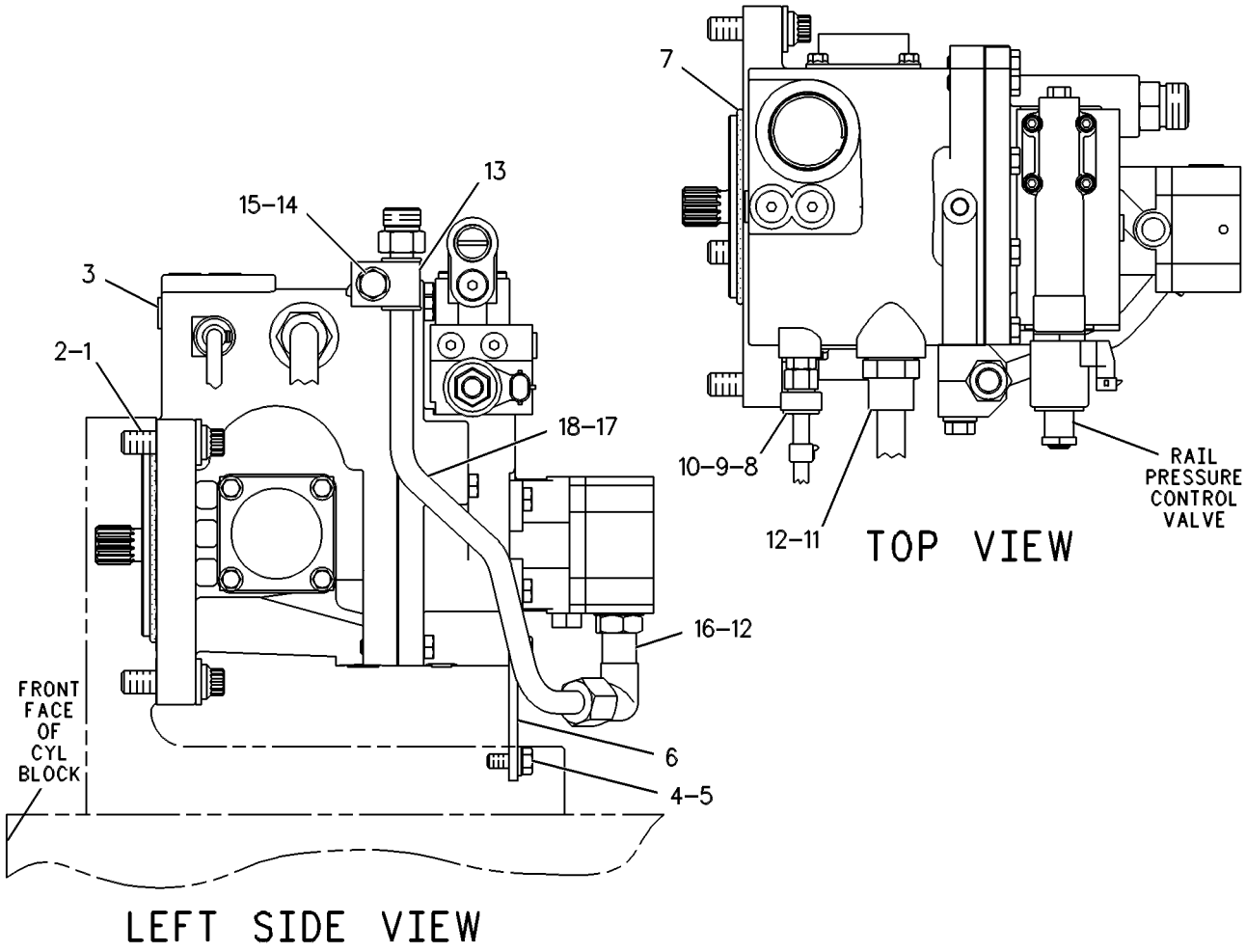

GRAPHIC #1 g00086494

126-7292 PUMP & MTG GP-UNIT INJ HYD

S/N: 80M2694-2772
PART OF 115-7641, 135-7810, 155-0058 ENGINE AR
ALSO AN ATTACHMENT

SMCS-1714 **i01741074**

NOTE	REF NO	GRAPHIC REF	PART NUMBER	QTY	PART NAME 1 2 3 4 5 6 (PRODUCT LEVEL)	SEE PAGE
	1	1	**5P-5855**	3	BOLT-12 POINT HEAD (1/2-13X1.75 IN)	
	2	1	**5P-8245**	3	WASHER-HARD (13.5X25.5X3MM THK)	
CY	3	1	**169-1034**	1	PUMP GP-UNIT INJECTOR HYD	302
	4	1	**0S-1617**	4	BOLT (5/16-18X0.75 IN)	
	5	1	**9M-1974**	4	WASHER-HARD (8.8X16X2MM THK)	
	6	1	**118-8157**	1	SUPPORT-PUMP	
	7	1	**6V-1197**	1	SEAL-O-RING	
Y	8	1	**103-6092**	1	SENSOR GP-PRESSURE (ENGINE OIL)	454
	9	1	**9X-0262**	1	ADAPTER	
	10	1	**6V-5048**	2	SEAL-O-RING	
Y	11	1	**106-0735**	1	SENSOR GP-TEMPERATURE (ENGINE OIL)	468
	12	1	**8L-2786**	2	SEAL-O-RING	
	13	1	**4P-0707**	2	CLAMP AS	
	14	1	**0L-2070**	1	BOLT (3/8-16X2.25 IN)	
	15	1	**5M-2894**	1	WASHER-HARD (10.2X18.5X2.5MM THK)	
	16	1	**8T-1686**	1	ELBOW	
	17	1	**033-6033**	1	SEAL-O-RING	
	18	1	**127-1969**	1	TUBE AS	

C-CHANGE FROM PREVIOUS TYPE
Y-SEPARATE ILLUSTRATION

126-7292 **PUMP & MTG GP-UNIT INJ HYD** *(contd.)* **i01741074**

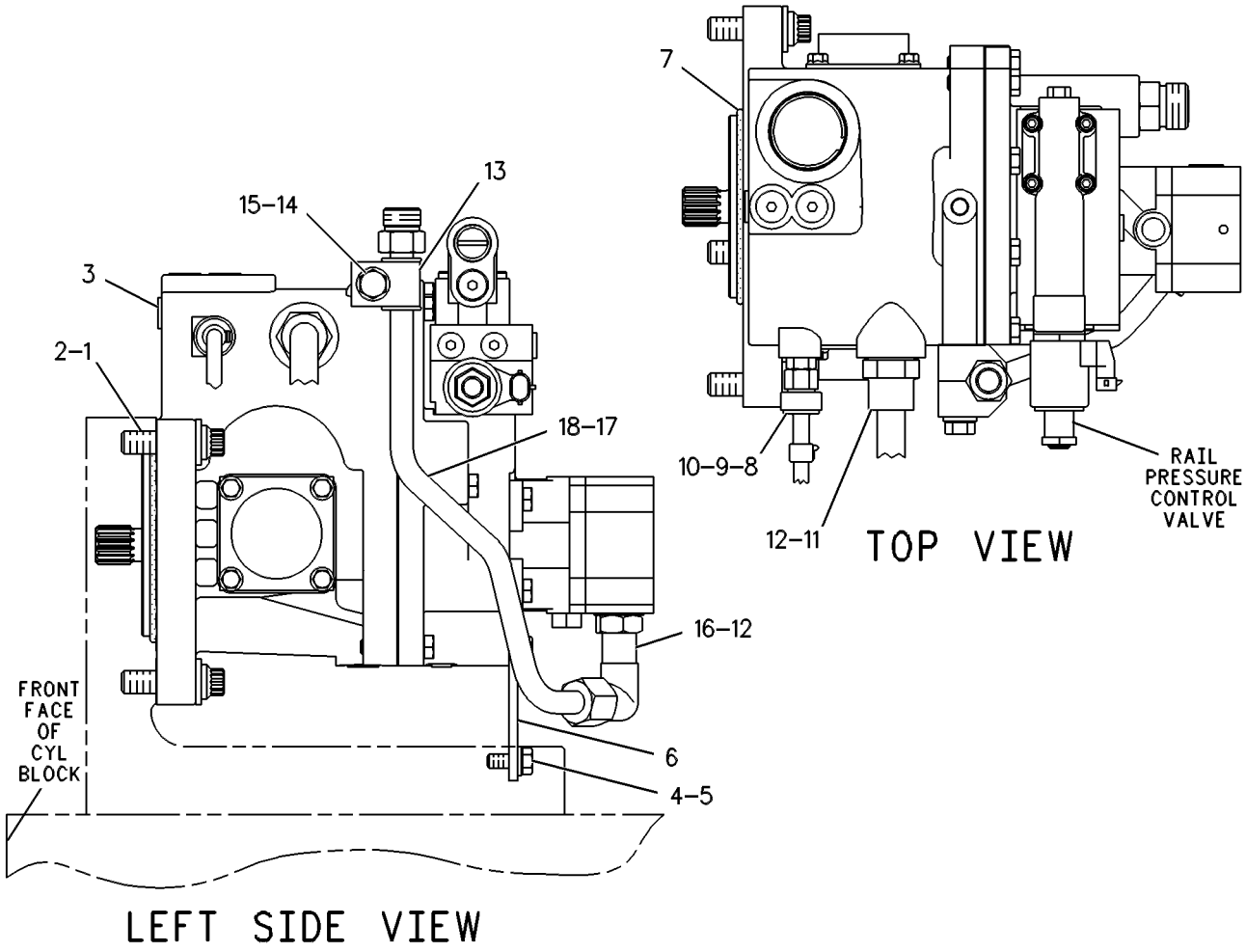

GRAPHIC #1 g00086494

126-7292 PUMP & MTG GP-UNIT INJ HYD

S/N: 80M2773-4511
PART OF 115-7641, 135-7810, 155-0058 ENGINE AR
ALSO AN ATTACHMENT

SMCS-1714 **i01749318**

NOTE	REF NO	GRAPHIC REF	PART NUMBER	QTY	PART NAME 1 2 3 4 5 6 (PRODUCT LEVEL)	SEE PAGE
	1	1	**5P-5855**	3	BOLT-12 POINT HEAD (1/2-13X1.75 IN)	
	2	1	**5P-8245**	3	WASHER-HARD (13.5X25.5X3MM THK)	
CY	3	1	**144-0835**	1	PUMP GP-UNIT INJECTOR HYD	300
	4	1	**0S-1617**	4	BOLT (5/16-18X0.75 IN)	
	5	1	**9M-1974**	4	WASHER-HARD (8.8X16X2MM THK)	
	6	1	**118-8157**	1	SUPPORT-PUMP	
	7	1	**6V-1197**	1	SEAL-O-RING	
CY	8	1	**161-9931**	1	SENSOR GP-PRESSURE (ENGINE OIL)	458
	9	1	**9X-0262**	1	ADAPTER	
	10	1	**6V-5048**	2	SEAL-O-RING	
Y	11	1	**106-0735**	1	SENSOR GP-TEMPERATURE (ENGINE OIL)	468
	12	1	**8L-2786**	2	SEAL-O-RING	
	13	1	**4P-0707**	2	CLAMP AS	
	14	1	**0L-2070**	1	BOLT (3/8-16X2.25 IN)	
	15	1	**5M-2894**	1	WASHER-HARD (10.2X18.5X2.5MM THK)	
	16	1	**8T-1686**	1	ELBOW	
	17	1	**033-6033**	1	SEAL-O-RING	
	18	1	**127-1969**	1	TUBE AS	

C-CHANGE FROM PREVIOUS TYPE
Y-SEPARATE ILLUSTRATION

126-7292 **PUMP & MTG GP-UNIT INJ HYD** *(contd.)* **i01749318**

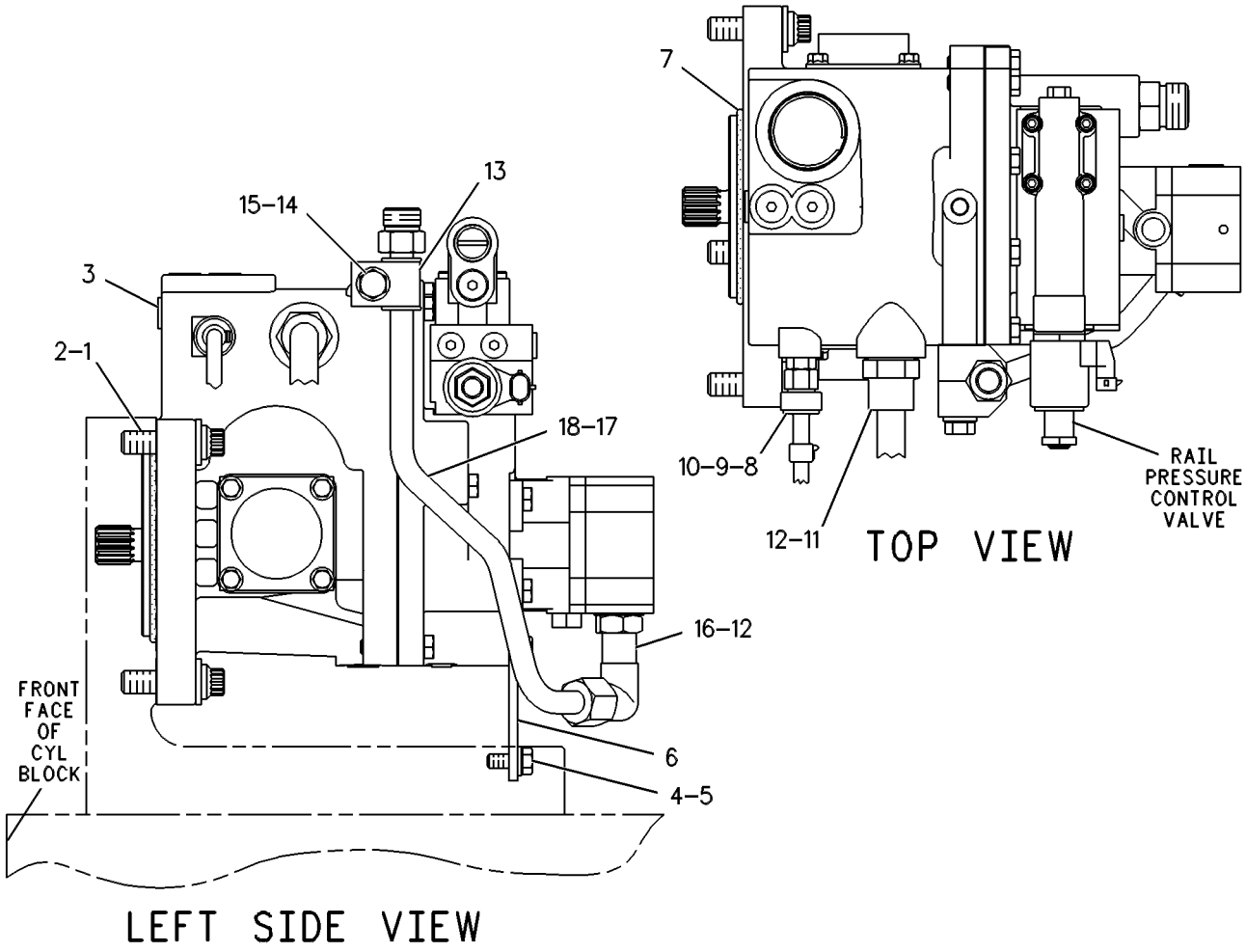

GRAPHIC #1 g00086494

FUEL SYSTEM

126-7292 PUMP & MTG GP-UNIT INJ HYD

S/N: 80M4512-UP
PART OF 115-7641, 135-7810, 155-0058 ENGINE AR
ALSO AN ATTACHMENT

SMCS-1714 **i01749320**

NOTE	REF NO	GRAPHIC REF	PART NUMBER	QTY	PART NAME 1 2 3 4 5 6 (PRODUCT LEVEL)	SEE PAGE
	1	1	**5P-5855**	3	BOLT-12 POINT HEAD (1/2-13X1.75 IN)	
	2	1	**5P-8245**	3	WASHER-HARD (13.5X25.5X3MM THK)	
CY	3	1	**201-4201**	1	PUMP GP-UNIT INJECTOR HYD	304
	4	1	**0S-1617**	4	BOLT (5/16-18X0.75 IN)	
	5	1	**9M-1974**	4	WASHER-HARD (8.8X16X2MM THK)	
	6	1	**118-8157**	1	SUPPORT-PUMP	
	7	1	**6V-1197**	1	SEAL-O-RING	
CY	8	1	**194-6725**	1	SENSOR GP-PRESSURE (ENGINE OIL)	462
	9	1	**9X-0262**	1	ADAPTER	
	10	1	**6V-5048**	2	SEAL-O-RING	
Y	11	1	**106-0735**	1	SENSOR GP-TEMPERATURE (ENGINE OIL)	468
	12	1	**8L-2786**	2	SEAL-O-RING	
	13	1	**4P-0707**	2	CLAMP AS	
	14	1	**0L-2070**	1	BOLT (3/8-16X2.25 IN)	
	15	1	**5M-2894**	1	WASHER-HARD (10.2X18.5X2.5MM THK)	
	16	1	**8T-1686**	1	ELBOW	
	17	1	**033-6033**	1	SEAL-O-RING	
	18	1	**127-1969**	1	TUBE AS	

C-CHANGE FROM PREVIOUS TYPE
Y-SEPARATE ILLUSTRATION

126-7292 **PUMP & MTG GP-UNIT INJ HYD** *(contd.)* **i01749320**

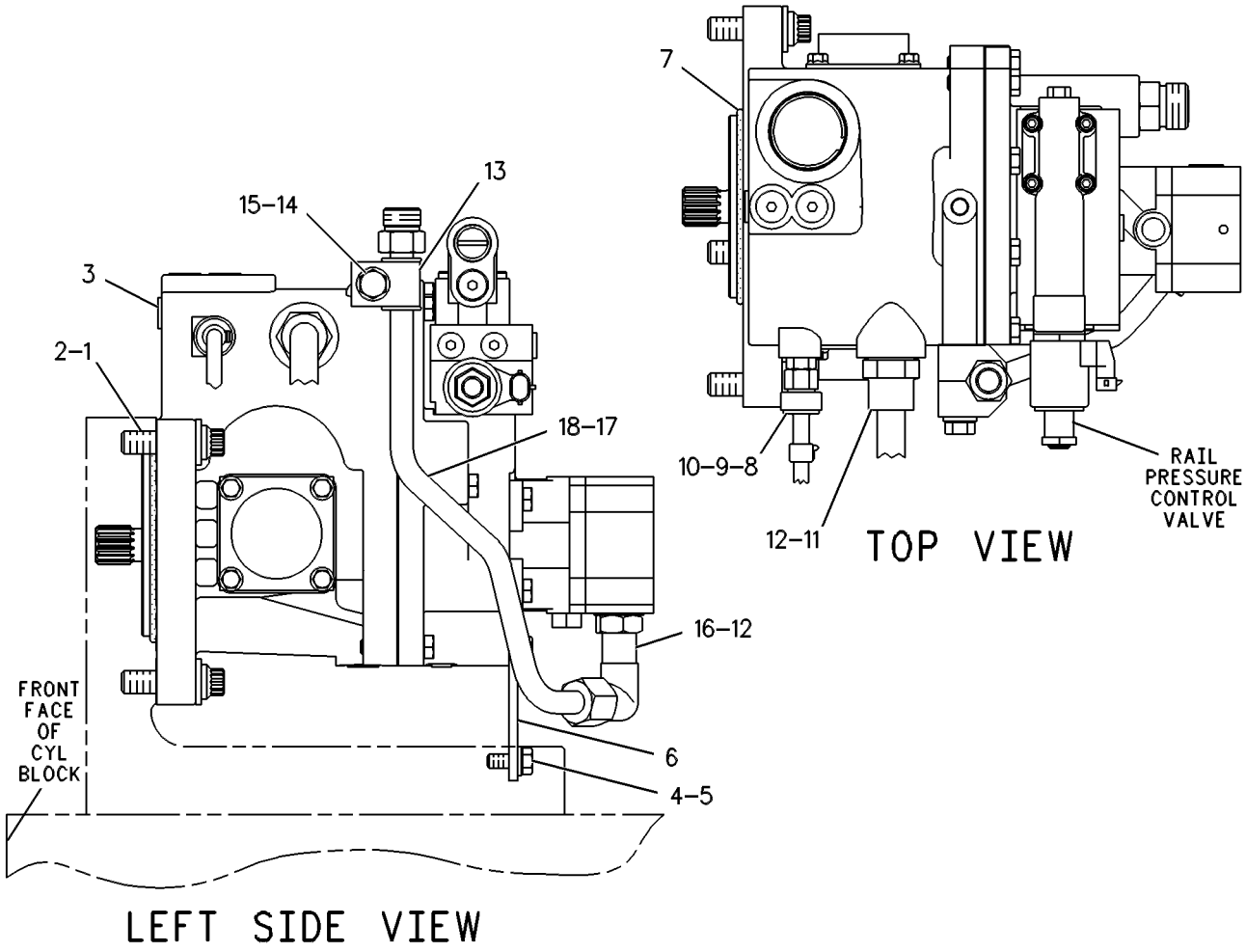

GRAPHIC #1 g00086494

FUEL SYSTEM

108-7090 PUMP GP-FUEL INJECTION

S/N: 80M1-UP
PART OF 115-7641, 135-7810 ENGINE AR
ALSO AN ATTACHMENT

SMCS-1251, 1253, 1272, 1281, 1290, 1292, 1299 **i01741217**

NOTE	REF NO	GRAPHIC REF	PART NUMBER	QTY	PART NAME 1 2 3 4 5 6 (PRODUCT LEVEL)	SEE PAGE
	1	1	**2P-3206**	4	BOLT-WASHER HEAD (3/8-16X2 IN)	
	2	1	**1A-5964**	1	BOLT (3/8-16X4.5 IN)	
	3	1	**119-1708**	1	ELBOW-INJECTOR	
Y	4	1	*111-7916*	1	INJECTOR GP-FUEL	255
	5	1	**107-9326**	1	CLAMP-INJECTOR	
	6	1	**3E-6747**	1	SEAL-O-RING	
	7	1	**9X-7681**	1	SEAL-O-RING (18.77MM ID)	
	8	1	**116-7221**	2	SEAL-RECTANGULAR	

Y-SEPARATE ILLUSTRATION

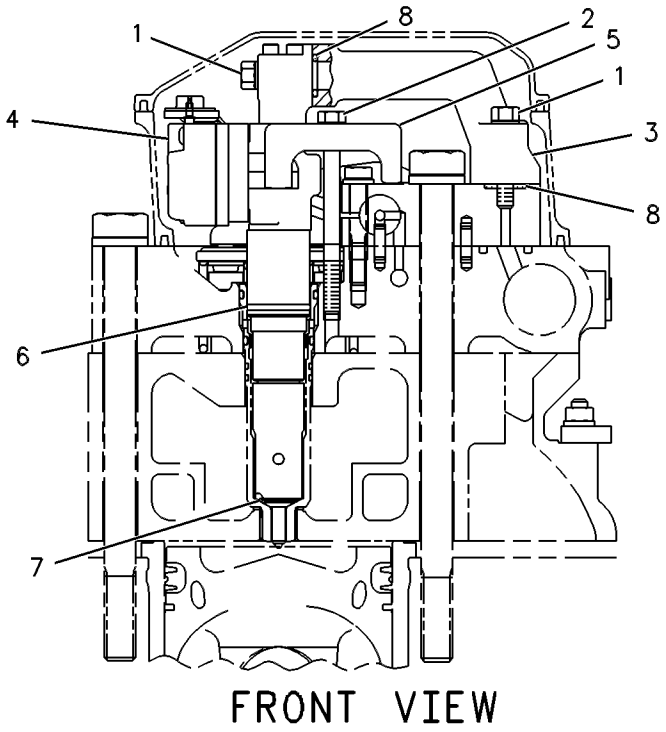

GRAPHIC #1 g00086488

FUEL SYSTEM

108-7090 PUMP GP-FUEL INJECTION

S/N: 80M1048-2331
PART OF 115-7641, 135-7810, 155-0058 ENGINE AR
ALSO AN ATTACHMENT

SMCS-1251, 1253, 1272, 1281, 1290, 1292, 1299 **i01741218**

NOTE	REF NO	GRAPHIC REF	PART NUMBER	QTY	PART NAME 1 2 3 4 5 6 (PRODUCT LEVEL)	SEE PAGE
	1	1	**2P-3206**	4	BOLT-WASHER HEAD (3/8-16X2 IN)	
	2	1	**1A-5964**	1	BOLT (3/8-16X4.5 IN)	
	3	1	**119-1708**	1	ELBOW-INJECTOR	
YC	4	1	*138-8756*	1	INJECTOR GP-FUEL	256
	5	1	**107-9326**	1	CLAMP-INJECTOR	
	6	1	**3E-6747**	1	SEAL-O-RING	
	7	1	**9X-7681**	1	SEAL-O-RING (18.77MM ID)	
	8	1	**116-7221**	2	SEAL-RECTANGULAR	

C-CHANGE FROM PREVIOUS TYPE
Y-SEPARATE ILLUSTRATION

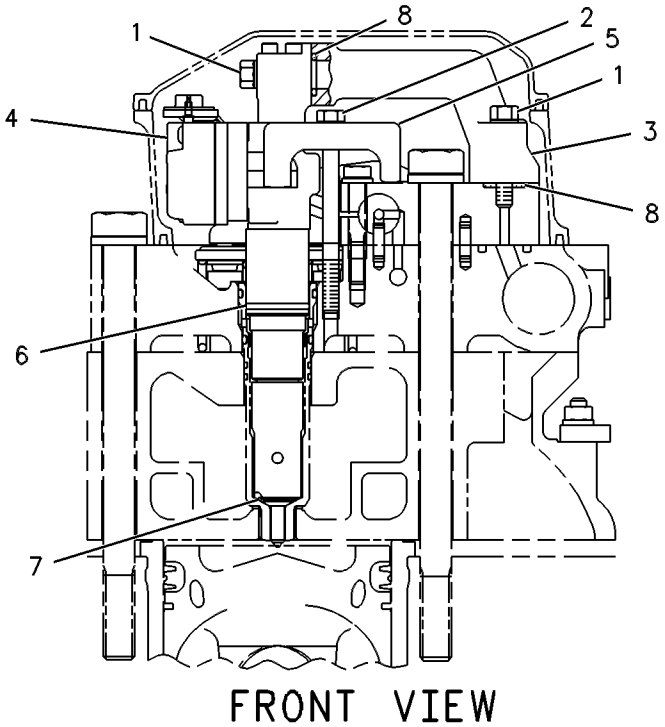

GRAPHIC #1 g00086488

FUEL SYSTEM

108-7090 PUMP GP-FUEL INJECTION

S/N: 80M2332-2882
PART OF 115-7641, 135-7810, 155-0058 ENGINE AR
ALSO AN ATTACHMENT

SMCS-1251, 1253, 1272, 1281, 1290, 1292, 1299 **i01741220**

NOTE	REF NO	GRAPHIC REF	PART NUMBER	QTY	PART NAME 1 2 3 4 5 6 (PRODUCT LEVEL)	SEE PAGE
	1	1	**2P-3206**	4	BOLT-WASHER HEAD (3/8-16X2 IN)	
	2	1	**1A-5964**	1	BOLT (3/8-16X4.5 IN)	
	3	1	**119-1708**	1	ELBOW-INJECTOR	
CY	4	1	*159-0836*	1	INJECTOR GP-FUEL	257
	5	1	**107-9326**	1	CLAMP-INJECTOR	
	6	1	**3E-6747**	1	SEAL-O-RING	
	7	1	**9X-7681**	1	SEAL-O-RING (18.77MM ID)	
	8	1	**116-7221**	2	SEAL-RECTANGULAR	

C-CHANGE FROM PREVIOUS TYPE
Y-SEPARATE ILLUSTRATION

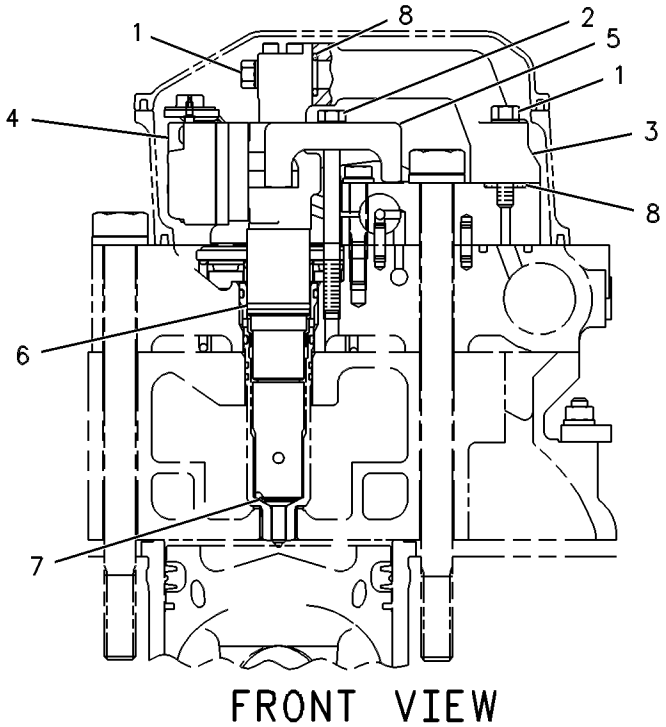

GRAPHIC #1 g00086488

FUEL SYSTEM

108-7090 PUMP GP-FUEL INJECTION

S/N: 80M2883-4651
PART OF 115-7641, 135-7810, 155-0058 ENGINE AR
ALSO AN ATTACHMENT

SMCS-1251, 1253, 1272, 1281, 1290, 1292, 1299 **i01741221**

NOTE	REF NO	GRAPHIC REF	PART NUMBER	QTY	PART NAME 1 2 3 4 5 6 (PRODUCT LEVEL)	SEE PAGE
	1	1	**2P-3206**	4	BOLT-WASHER HEAD (3/8-16X2 IN)	
	2	1	**1A-5964**	1	BOLT (3/8-16X4.5 IN)	
	3	1	**119-1708**	1	ELBOW-INJECTOR	
CY	4	1	*174-7527*	1	INJECTOR GP-FUEL	258
	5	1	**107-9326**	1	CLAMP-INJECTOR	
	6	1	**3E-6747**	1	SEAL-O-RING	
	7	1	**9X-7681**	1	SEAL-O-RING (18.77MM ID)	
	8	1	**116-7221**	2	SEAL-RECTANGULAR	

C-CHANGE FROM PREVIOUS TYPE
Y-SEPARATE ILLUSTRATION

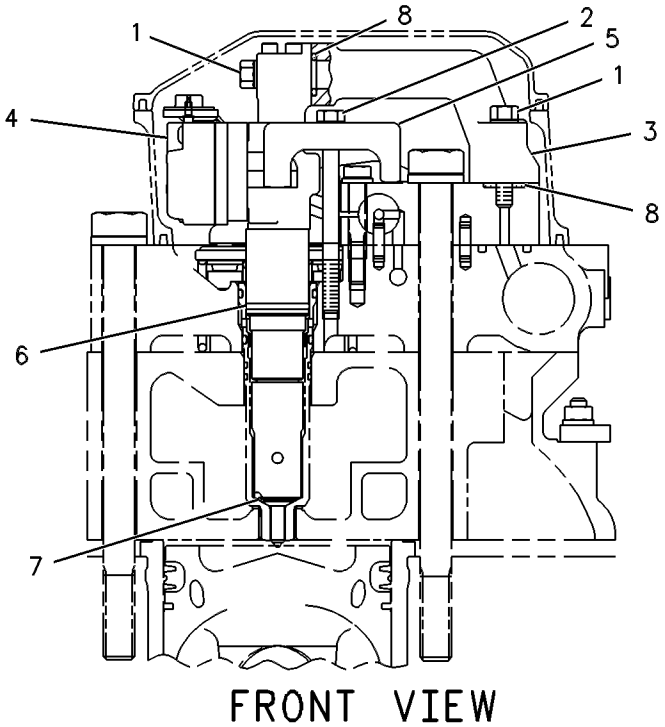

GRAPHIC #1 g00086488

FUEL SYSTEM

206-2630 PUMP GP-FUEL INJECTION

S/N: 80M4652-UP
PART OF 115-7641, 135-7810, 155-0058 ENGINE AR
ALSO AN ATTACHMENT

SMCS-1251, 1253, 1272, 1281, 1290, 1292, 1299 **i01564586**

NOTE	REF NO	GRAPHIC REF	PART NUMBER	QTY	PART NAME 1 2 3 4 5 6 (PRODUCT LEVEL)	SEE PAGE
	1	1	**2P-3206**	4	BOLT-WASHER HEAD	
	2	1	**1A-5964**	1	BOLT (3/8-16X4.5 IN)	
	3	1	**119-1708**	1	ELBOW-INJECTOR	
Y	4	1	*198-7912*	1	INJECTOR GP-FUEL	259
	5	1	**107-9326**	1	CLAMP-INJECTOR	
	6	1	**3E-6747**	1	SEAL-O-RING	
	7	1	**9X-7681**	1	SEAL-O-RING	
	8	1	**116-7221**	2	SEAL-RECTANGULAR	

Y-SEPARATE ILLUSTRATION

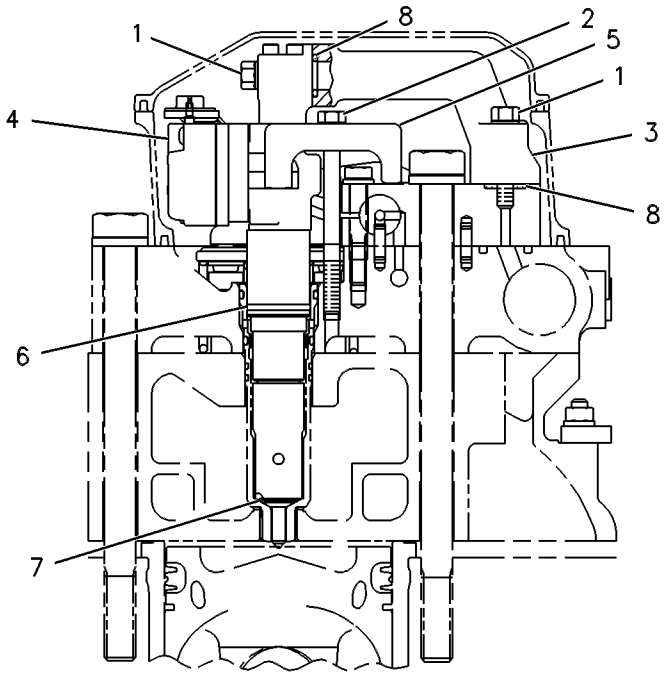

FRONT VIEW

GRAPHIC #1 g00086488

FUEL SYSTEM

132-5313 PUMP GP-FUEL PRIMING

S/N: 3KR1-1006

SMCS-1258 **i01741275**

NOTE	REF NO	GRAPHIC REF	PART NUMBER	QTY	PART NAME 1 2 3 4 5 6 (PRODUCT LEVEL)	SEE PAGE
I	1	1	**132-4485**	1	HOSE AS	
	2	1	**6V-8398**	2	SEAL-O-RING	
	3	1	**6V-8624**	1	ELBOW	
	4	1	**2M-9780**	1	SEAL-O-RING	
	5	1	**7B-2742**	1	BOLT (1/4-20X1.25 IN)	
	6	1	**5P-0537**	1	WASHER-HARD (7.2X14.5X2MM THK)	
	7	1	**1B-7182**	1	BOLT (5/16-18X1.25 IN)	
	8	1	**9M-1974**	1	WASHER-HARD (8.8X16X2MM THK)	
Y	9	1	*131-0463*	1	FILTER GP-WATER SEP & FUEL	252
	10	1	**132-5311**	1	BRACKET AS	
	11	1	**9B-7237**	6	BOLT (3/8-16X1.25 IN)	
	12	1	**8T-4896**	6	WASHER-HARD (10.2X18.5X2.5MM THK)	
	13	1	**105-2508**	1	PUMP AS-FUEL PRIMING	
		1	**7E-5346**	2	VALVE AS	
		1	**7F-8607**	1	SEAL-O-RING	
	14	1	**1P-0436**	1	GASKET (FUEL PRIMING PUMP)	
D	15	1	**5P-5991**		HOSE (.7M)	

D-ORDER BY THE METER
I-SEE HOSE FABRICATION GUIDE
Y-SEPARATE ILLUSTRATION

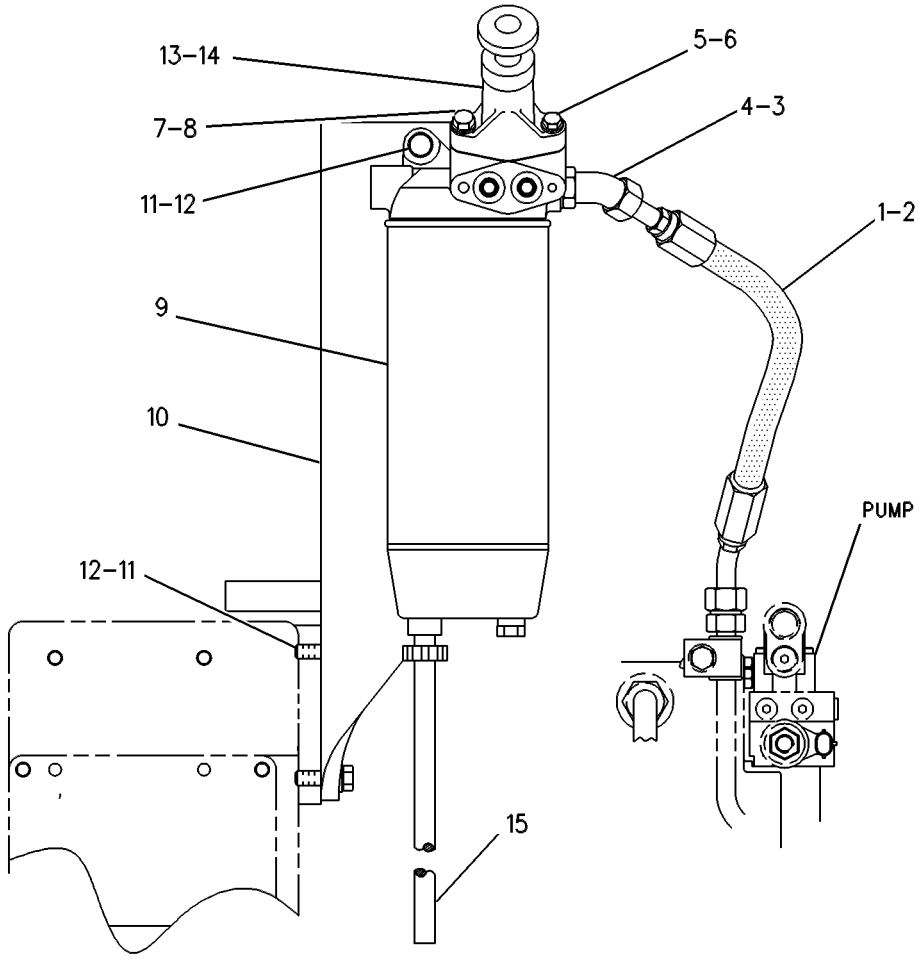

LEFT SIDE VIEW

GRAPHIC #1 g00270750

FUEL SYSTEM

129-4832 PUMP GP-FUEL PRM & PRIM FILTER

S/N: 3KR1007-1462

PART OF 149-9936 FILTER GP-FUEL

SMCS-1258, 1260, 1261 **i01400911**

NOTE	REF NO	GRAPHIC REF	PART NUMBER	QTY	PART NAME 1 2 3 4 5 6 (PRODUCT LEVEL)	SEE PAGE
	1	1	**128-8557**	1	BASE AS-FILTER	
		1	**7E-5346**	1	VALVE AS	
		1	**9S-4167**	1	STUD-HOLLOW	
	2	1	**129-0372**	1	FILTER AS-WATER SEP & FUEL	
		1	**141-0284**	1	KIT-FUEL FILTER & WATER SEP	
		1	**129-0373**	1	ELEMENT-FILTER	
		1	**129-0375**	1	BOWL AS-WATER COLLECTION	
	3	1	**105-2508**	1	PUMP AS-FUEL PRIMING	
		1	**7E-5346**	2	VALVE AS	
		1	**7F-8607**	1	SEAL-O-RING (18.72MM ID)	
	4	1	**1P-0436**	1	GASKET (FUEL PRIMING PUMP)	
	5	1	**7B-2742**	1	BOLT (1/4-20X1.25 IN)	
	6	1	**5P-0537**	1	WASHER-HARD (7.2X14.5X2MM THK)	
	7	1	**1B-7182**	1	BOLT (5/16-18X1.25IN)	
	8	1	**9M-1974**	1	WASHER-HARD (8.8X16X2MM THK)	
	9	1	**9S-8002**	4	PLUG-O-RING	
	10	1	**6V-5048**	4	SEAL-O-RING (8.92MM ID)	

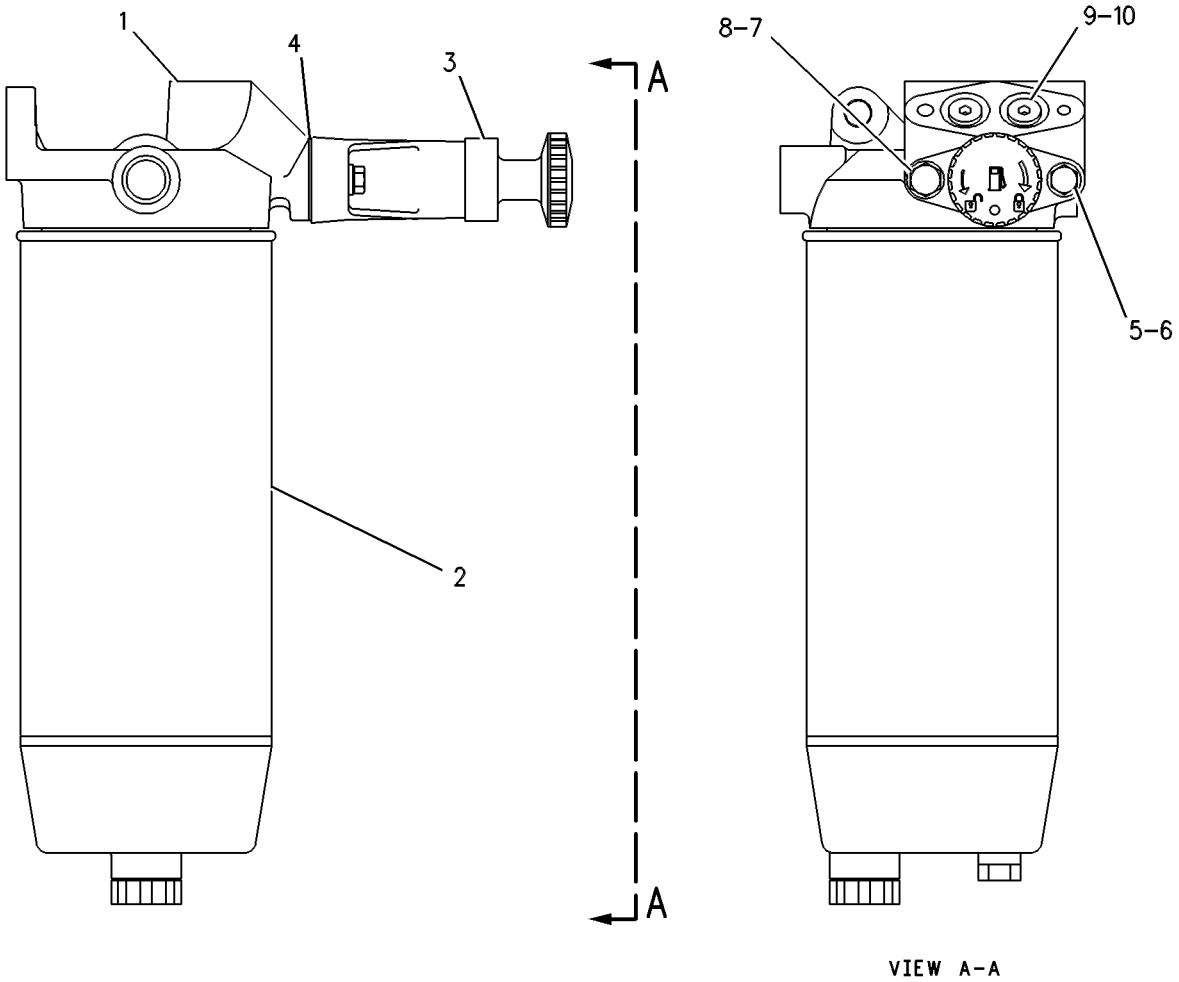

GRAPHIC #1 g00086650

MEMORANDA

125-3225 PUMP GP-UNIT INJECTOR HYD

S/N: 80M1-153

PART OF 126-7292 PUMP & MTG GP-UNIT INJ HYD

ALSO AN ATTACHMENT

SMCS-1714 **i01400912**

NOTE	REF NO	GRAPHIC REF	PART NUMBER	QTY	PART NAME 1 2 3 4 5 6 (PRODUCT LEVEL)	SEE PAGE
Y	1	1	**107-0677**	1	VALVE GP-SOLENOID	1050
	2	1	**111-8863**	1	PUMP GP-FUEL TRANSFER	
	3	1	**130-4607**	1	PUMP GP-UNIT INJECTOR HYD	
	4	1	**0S-1617**	4	BOLT (5/16-18X.75 IN)	
	5	1	**9S-8001**	2	PLUG-O-RING	
	6	1	**9S-8004**	4	PLUG-O-RING	
	7	1	**9S-8002**	3	PLUG-O-RING	
	8	1	**9S-8003**	1	PLUG-O-RING	
	9	1	**9S-4180**	2	PLUG-O-RING	
	10	1	**9S-8007**	1	PLUG-O-RING	
	11	1	**6V-8676**	1	SEAL-O-RING (48.90MM ID)	
F			**117-1620**	1	COUPLING	
F			**126-7234**	1	GASKET-HOUSING	
					AVAILABLE REPAIR KIT(S):	
			126-7235	1	KIT-SEAL	
					(INCLUDES SEAL-O-RING & GASKETS)	

F-NOT SHOWN
Y-SEPARATE ILLUSTRATION

125-3225 **PUMP GP-UNIT INJECTOR HYD** *(contd.)* **i01400912**

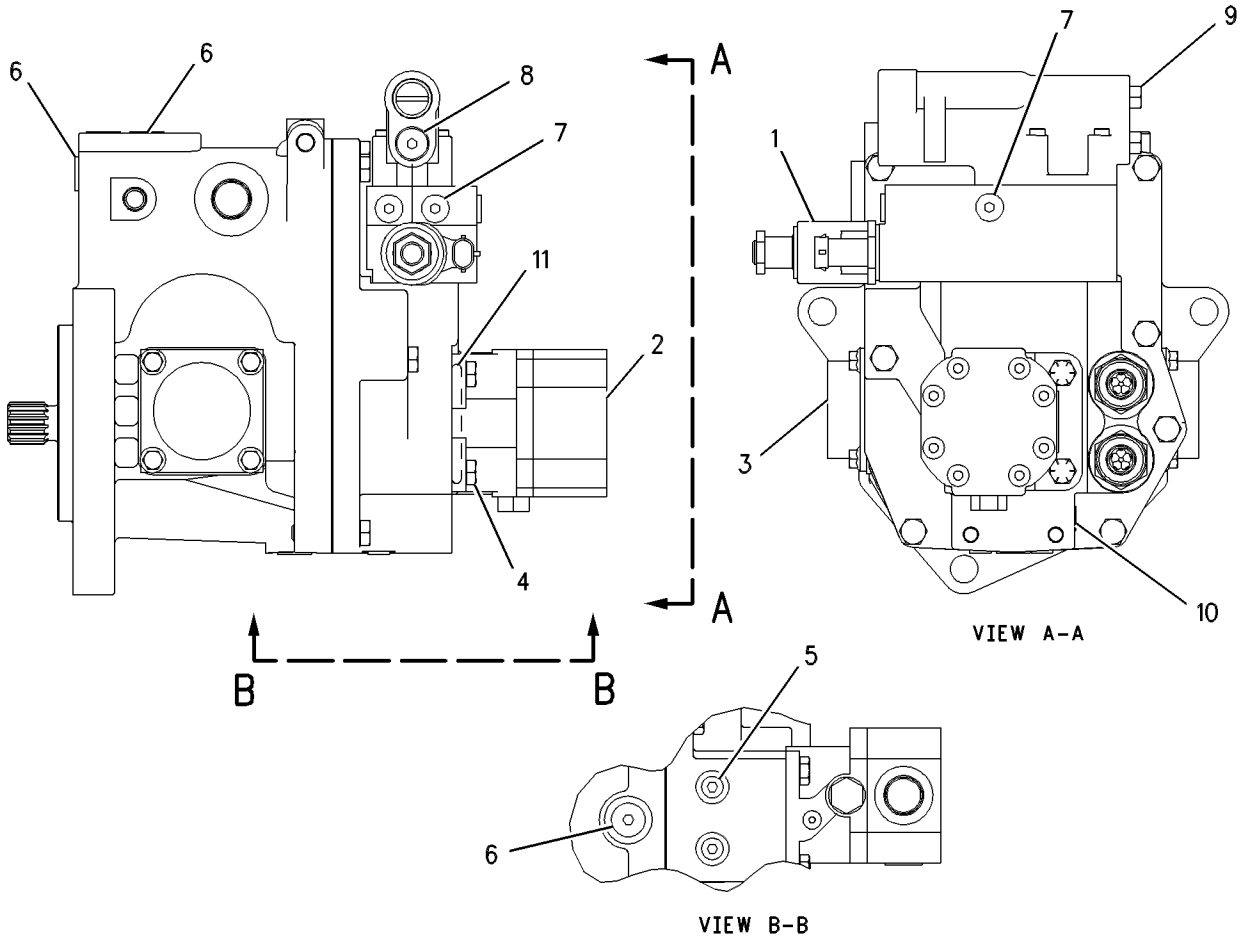

GRAPHIC #1 g00614485

FUEL SYSTEM

133-1708 PUMP GP-UNIT INJECTOR HYD

S/N: 80M154-186
PART OF 126-7292 PUMP & MTG GP-UNIT INJ HYD
ALSO AN ATTACHMENT

SMCS-1714 **i01500333**

NOTE	REF NO	GRAPHIC REF	PART NUMBER	QTY	PART NAME 1 2 3 4 5 6 (PRODUCT LEVEL)	SEE PAGE
Y	1	1	**107-0677**	1	VALVE GP-SOLENOID (PRESSURE CONTROL)	1050
	2	1	**111-8863**	1	PUMP GP-FUEL TRANSFER	
	3	1	**133-1707**	1	PUMP GP-UNIT INJECTOR HYD	
	4	1	**0S-1617**	4	BOLT (5/16-18X0.75 IN)	
	5	1	**9S-8001**	2	PLUG	
	6	1	**9S-8004**	4	PLUG	
	7	1	**9S-8002**	3	PLUG-O-RING	
	8	1	**9S-8003**	1	PLUG-O-RING	
	9	1	**9S-4180**	2	PLUG-O-RING	
	10	1	**9S-8007**	1	PLUG-O-RING	
	11	1	**6V-8676**	1	SEAL-O-RING	
F			**117-1620**	1	COUPLING	
					AVAILABLE REPAIR KIT(S):	
			133-1706	1	KIT-SEAL	
					(INCLUDES SEAL-O-RINGS & GASKETS)	

F-NOT SHOWN
Y-SEPARATE ILLUSTRATION

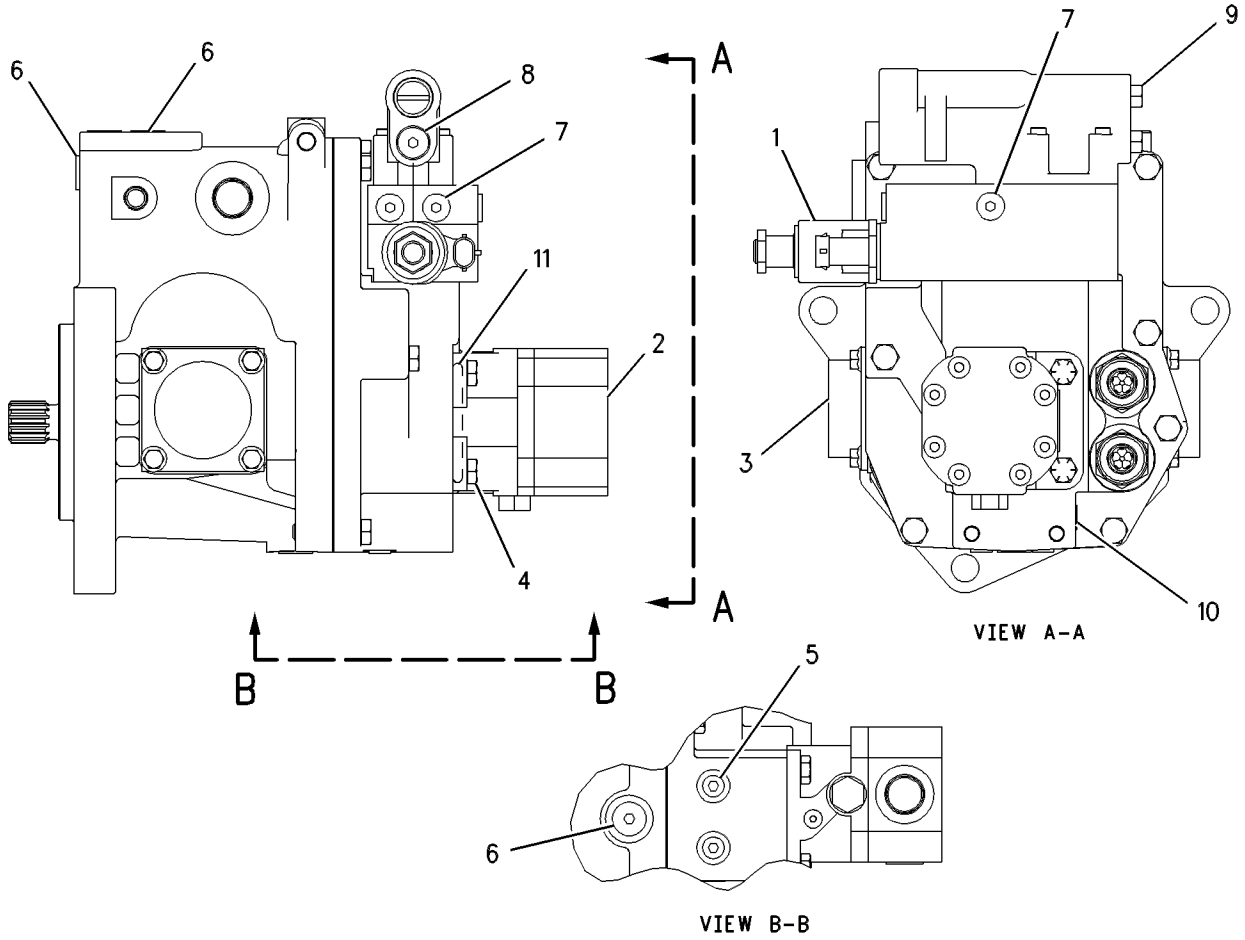

GRAPHIC #1 g00614542

FUEL SYSTEM

134-1598 PUMP GP-UNIT INJECTOR HYD

S/N: 80M187-595
PART OF 126-7292 PUMP & MTG GP-UNIT INJ HYD
ALSO AN ATTACHMENT

SMCS-1714 **i01500336**

NOTE	REF NO	GRAPHIC REF	PART NUMBER	QTY	PART NAME 1 2 3 4 5 6 (PRODUCT LEVEL)	SEE PAGE
Y	1	1	**107-0677**	1	VALVE GP-SOLENOID (PRESSURE CONTROL)	1050
	2	1	**111-8863**	1	PUMP GP-FUEL TRANSFER	
	3	1	**134-1599**	1	PUMP GP-UNIT INJECTOR HYD	
	4	1	**0S-1617**	4	BOLT (5/16-18X0.75 IN)	
	5	1	**9S-8001**	2	PLUG	
	6	1	**9S-8004**	4	PLUG	
	7	1	**9S-8002**	3	PLUG-O-RING	
	8	1	**9S-8003**	1	PLUG-O-RING	
	9	1	**9S-4180**	2	PLUG-O-RING	
	10	1	**9S-8007**	1	PLUG-O-RING	
	11	1	**6V-8676**	1	SEAL-O-RING	
F			**117-1620**	1	COUPLING	
					AVAILABLE REPAIR KIT(S):	
			133-1706	1	KIT-SEAL	
					(INCLUDES SEAL-O-RINGS & GASKETS)	

F-NOT SHOWN
Y-SEPARATE ILLUSTRATION

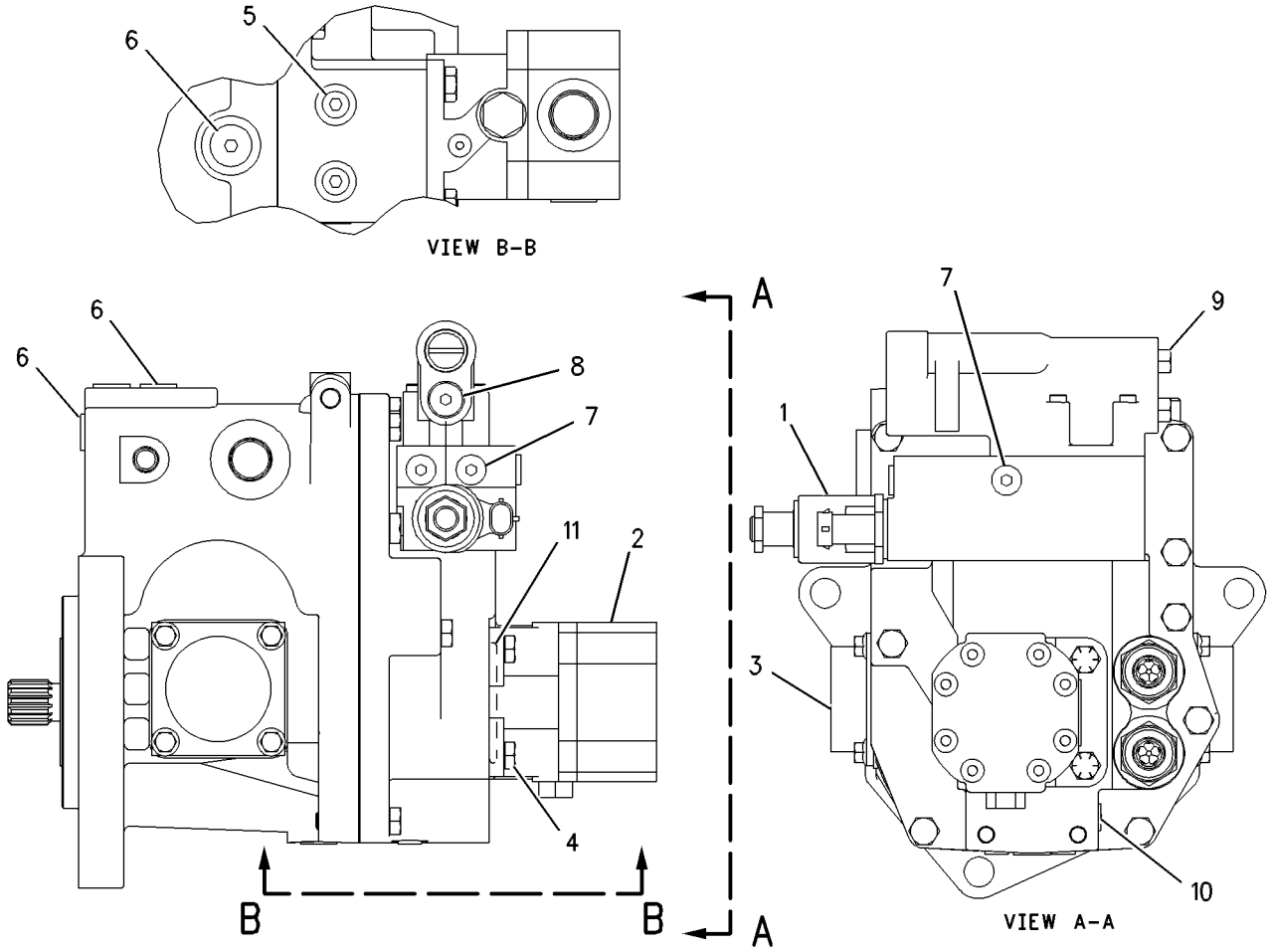

GRAPHIC #1 g00547751

FUEL SYSTEM

134-9405 PUMP GP-UNIT INJECTOR HYD

S/N: 80M596-1003
PART OF 126-7292 PUMP & MTG GP-UNIT INJ HYD
ALSO AN ATTACHMENT

SMCS-1714 **i01278442**

NOTE	REF NO	GRAPHIC REF	PART NUMBER	QTY	PART NAME 1 2 3 4 5 6 (PRODUCT LEVEL)	SEE PAGE
Y	1	1	**107-0677**	1	VALVE GP-SOLENOID (PRESSURE CONTROL)	1050
	2	1	**111-8863**	1	PUMP GP-FUEL TRANSFER	
	3	1	**134-9404**	1	PUMP GP-UNIT INJECTOR HYD	
	4	1	**0S-1617**	4	BOLT (5/16-18X.75IN)	
	5	1	**9S-8001**	2	PLUG-O-RING (5/16-24 THD)	
	6	1	**9S-8004**	4	PLUG-O-RING (9/16-18 THD)	
	7	1	**9S-8002**	3	PLUG-O-RING (7/16-20 THD)	
	8	1	**9S-8003**	1	PLUG-O-RING (1/2-20 THD)	
	9	1	**9S-4180**	2	PLUG-O-RING (5/16-24 THD)	
	10	1	**9S-8007**	1	PLUG-O-RING (3/8-24 THD)	
	11	1	**138-4309**	2	FITTING	
	12	1	**138-4311**	2	SPRING	
	13	1	**138-4313**	2	VALVE	
F			**117-1620**	1	COUPLING	
					AVAILABLE REPAIR KIT(S):	
Y			**138-6256**	1	KIT-SEAL (UNIT INJECTOR HYDRAULIC)	260

F-NOT SHOWN
Y-SEPARATE ILLUSTRATION

134-9405 **PUMP GP-UNIT INJECTOR HYD** *(contd.)* **i01278442**

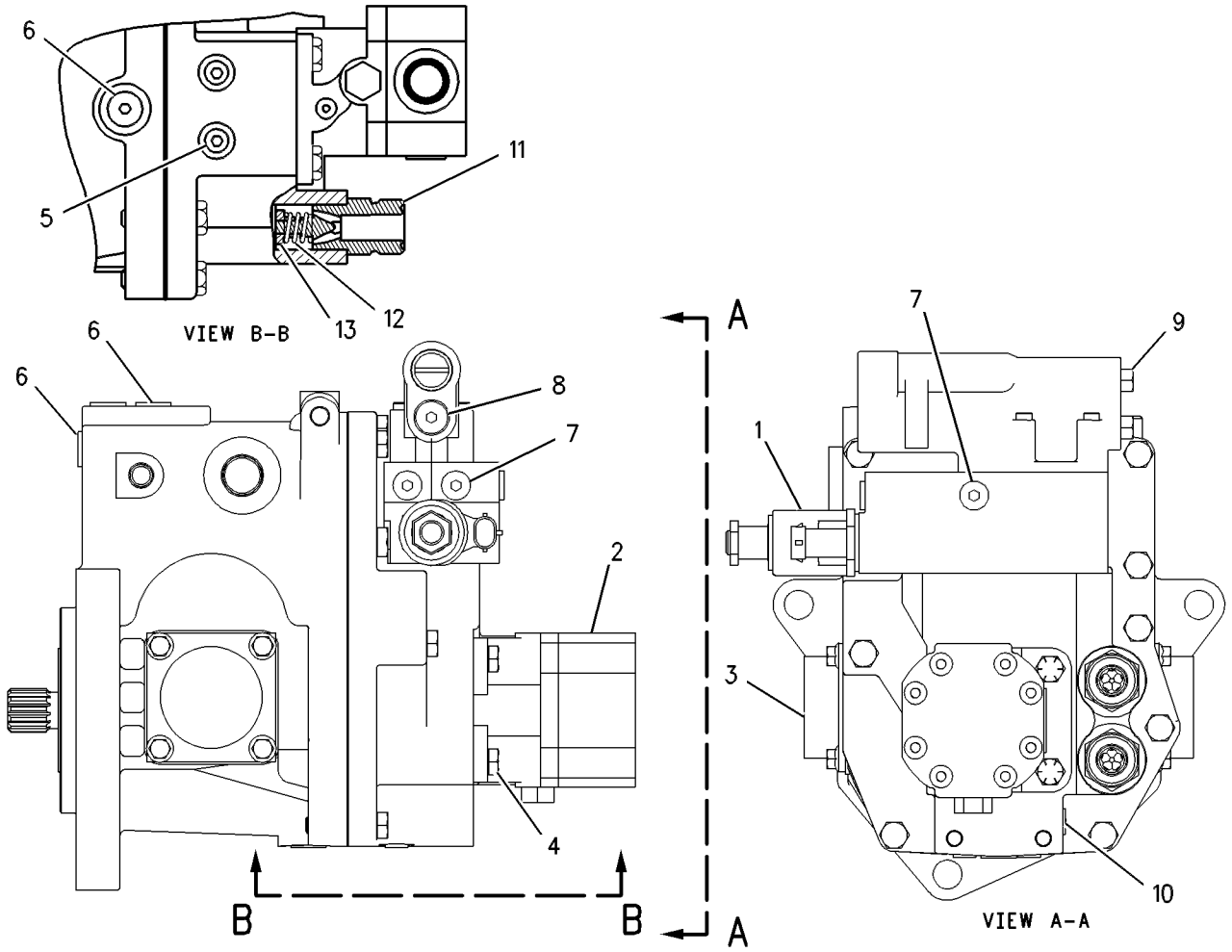

GRAPHIC #1 g00400910

FUEL SYSTEM

144-0835 PUMP GP-UNIT INJECTOR HYD

S/N: 80M1004-2693, 2773-4511
PART OF 126-7292 PUMP & MTG GP-UNIT INJ HYD
ALSO AN ATTACHMENT

SMCS-1714 **i01663478**

NOTE	REF NO	GRAPHIC REF	PART NUMBER	QTY	PART NAME 1 2 3 4 5 6 (PRODUCT LEVEL)	SEE PAGE
Y	1	1	**107-0677**	1	VALVE GP-SOLENOID (PRESSURE CONTROL)	1050
B	2	1	**161-8627**	1	KIT-PLUG (UNIT INJECTOR HYDRAULIC PUMP)	
					(INCLUDES PLUGS & SEALS)	
					(SELECT APPROPRIATE PLUG FROM KIT)	
	3	1	**9S-4180**	2	PLUG (5/16-24 THD)	
	4	1	**9S-8001**	2	PLUG (5/16-24 THD)	
	5	1	**9S-8002**	3	PLUG (7/16-20 THD)	
	6	1	**9S-8004**	4	PLUG (9/16-18 THD)	
	7	1	**9S-8007**	1	PLUG (3/8-24 THD)	
	8	1	**138-4309**	2	FITTING	
	9	1	**138-4311**	2	SPRING	
	10	1	**138-4313**	2	VALVE	
JR	11	1	**144-0837**	1	PUMP GP-UNIT INJECTOR HYD	
	12	1	**149-1950**	1	PUMP GP-FUEL TRANSFER	
	13	1	**0S-1617**	4	BOLT (5/16-18X0.75 IN)	
F			**117-1620**	1	COUPLING (FUEL TRANSFER)	
F			**154-6734**	1	BEARING (REAR)	
F			**6V-8676**	1	SEAL-O-RING (48.9MM ID) (FUEL TRANSFER)	
F			**9X-7680**	3	SEAL-O-RING (7.65MM ID) (COMPENSATOR TO ADAPTER)	
F			**135-2652**	1	SEAL-O-RING (17.17MM ID) (COMPENSATOR TO ADAPTER)	
F			**164-0759**	4	BOLT-SOCKET HEAD (10-24X3.25 IN) (COMPENSATOR)	
F			**165-6881**	1	SEAL-LIP TYPE	
F			**174-8943**	1	SLEEVE (COMPENSATOR)	
					AVAILABLE REPAIR KIT(S):	
			154-6735	1	KIT-BEARING (YOKE)(UNIT INJECTOR HYD PUMP)	
					(INCLUDES A SET OF TWO YOKE BEARINGS)	
J			**154-6732**	1	KIT-FUEL INJECTION PUMP (REBUILD)(UNIT INJ HYD PUMP)	
					(INCLUDES YOKE, SHAFT, CONTROL PISTON, SEAL KIT & FRONT BEARING)	
Y			**138-6256**	1	KIT-SEAL (UNIT INJECTOR HYDRAULIC PUMP)	260
			166-5985	1	KIT-COMPENSATOR (UNIT INJECTOR HYDRAULIC PUMP)	
					(INCLUDES COMPENSATOR SUB ASSEMBLY, SEAL-O-RINGS, SLEEVE, WIRE SEAL, LOCK WIRE, AND COMPENSATOR PLUGS)	

B-USE AS REQUIRED
F-NOT SHOWN
J-KIT MARKED J AVAILABLE FOR PART MARKED J
R-REMFG PART MAY BE AVAILABLE
Y-SEPARATE ILLUSTRATION

144-0835 PUMP GP-UNIT INJECTOR HYD *(contd.)* **i01663478**

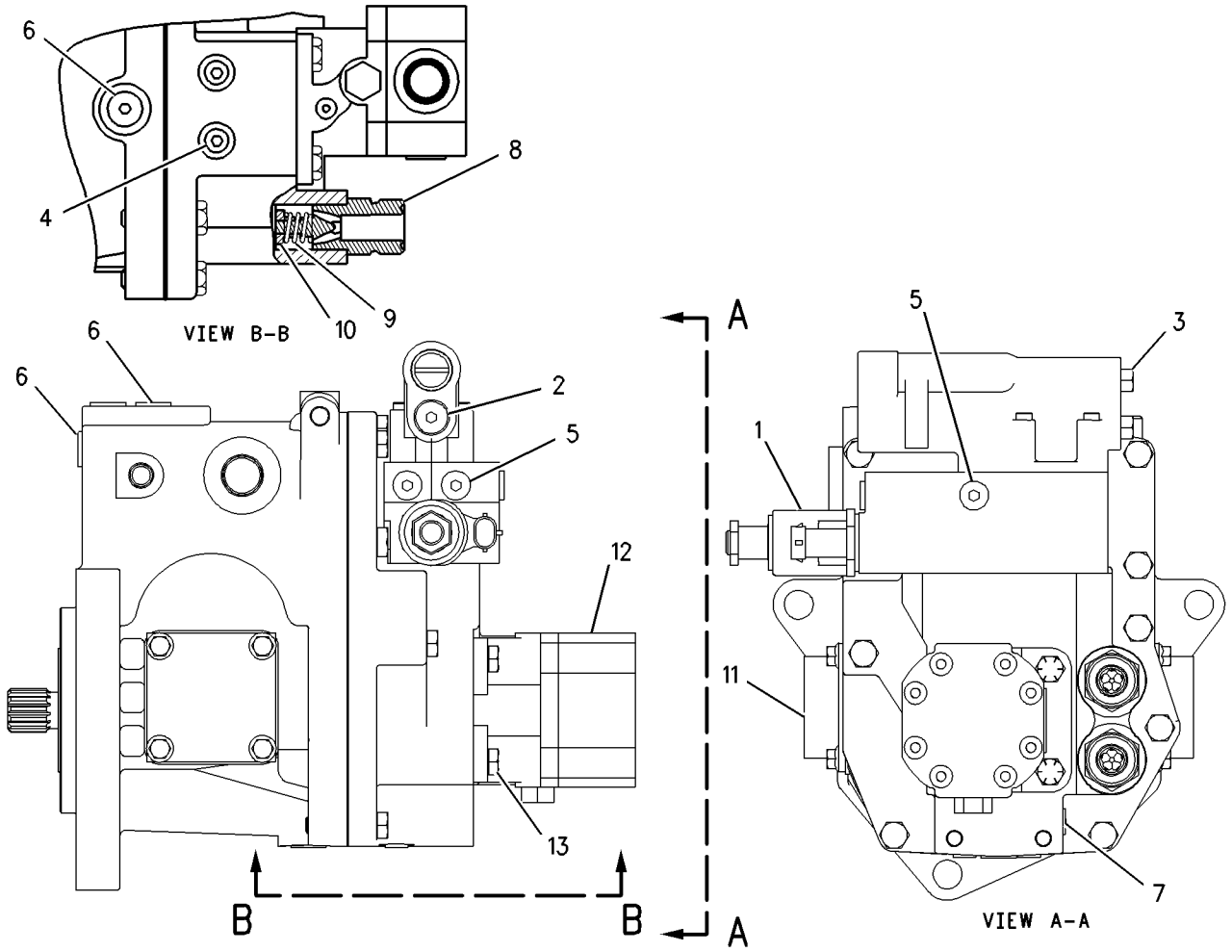

GRAPHIC #1 g00633271

FUEL SYSTEM

169-1034 PUMP GP-UNIT INJECTOR HYD

S/N: 80M2694-2772
PART OF 126-7292 PUMP & MTG GP-UNIT INJ HYD
ALSO AN ATTACHMENT

SMCS-1714 **i01663477**

NOTE	REF NO	GRAPHIC REF	PART NUMBER	QTY	PART NAME 1 2 3 4 5 6 (PRODUCT LEVEL)	SEE PAGE
Y	1	1	**107-0677**	1	VALVE GP-SOLENOID (PRESSURE CONTROL)	1050
B	2	1	**161-8627**	1	KIT-PLUG (UNIT INJECTOR HYDRAULIC PUMP)	
					(INCLUDES PLUGS & SEALS)	
					(SELECT APPROPRIATE PLUG FROM KIT)	
	3	1	**149-1950**	1	PUMP GP-FUEL TRANSFER	
J	4	1	**169-1035**	1	PUMP GP-UNIT INJECTOR HYD	
	5	1	**0S-1617**	4	BOLT (5/16-18X0.75 IN)	
	6	1	**9S-8001**	2	PLUG (5/16-24 THD)	
	7	1	**9S-8004**	4	PLUG (9/16-18 THD)	
	8	1	**9S-8002**	3	PLUG (7/16-20 THD)	
	9	1	**9S-4180**	2	PLUG (5/16-24 THD)	
	10	1	**9S-8007**	1	PLUG (3/8-24 THD)	
	11	1	**138-4309**	2	FITTING	
	12	1	**138-4311**	2	SPRING	
	13	1	**138-4313**	2	VALVE	
	14	1	**164-0759**	4	BOLT-SOCKET HEAD (10-24X3.25 IN)	
F			**117-1620**	1	COUPLING (FUEL TRANSFER)	
F			**154-6734**	1	BEARING (REAR)	
F			**154-6735**	2	KIT-BEARING (YOKE)	
					(EACH INCLUDES A SET OF TWO YOKE BEARINGS)	
					AVAILABLE REPAIR KIT(S):	
Y			**138-6256**	1	KIT-SEAL (UNIT INJECTOR HYDRAULIC PUMP)	260
J			**154-6732**	1	KIT-FUEL INJECTION PUMP (REBUILD)(UNIT INJ HYD PUMP)	
					(INCLUDES YOKE, SHAFT, PISTON-CONTROL, SEAL KIT, & BEARING FRONT)	
			166-5985	1	KIT-COMPENSATOR (UNIT INJECTOR HYDRAULIC PUMP)	
					(INCLUDES SEAL O-RING, SLEEVE, WIRE SEAL, LOCK WIRE & PLUGS)	

B-USE AS REQUIRED
F-NOT SHOWN
J-KIT MARKED J SERVICES PART MARKED J
Y-SEPARATE ILLUSTRATION

169-1034 PUMP GP-UNIT INJECTOR HYD *(contd.)* i01663477

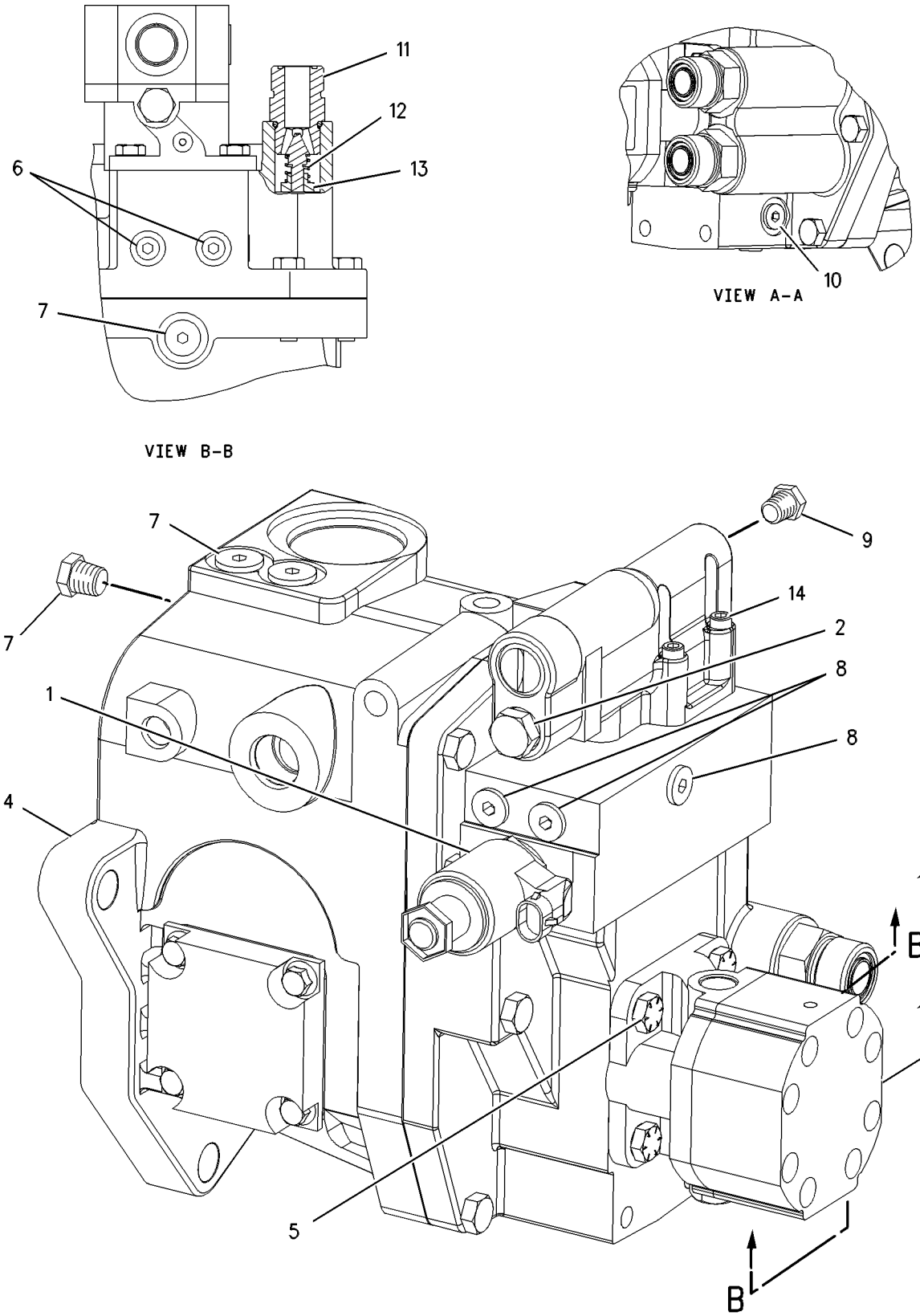

GRAPHIC #1 g00552592

FUEL SYSTEM

201-4201 PUMP GP-UNIT INJECTOR HYD

S/N: 80M4512-UP
PART OF 126-7292 PUMP & MTG GP-UNIT INJ HYD
ALSO AN ATTACHMENT

SMCS-1714 **i01741277**

NOTE	REF NO	GRAPHIC REF	PART NUMBER	QTY	PART NAME 1 2 3 4 5 6 (PRODUCT LEVEL)	SEE PAGE
	1	1	**117-1620**	1	COUPLING	
	2	1	**149-1950**	1	PUMP GP-FUEL TRANSFER	
YR	3	1	**201-4202**	1	PUMP GP-UNIT INJECTOR HYD	306
	4	1	**0S-1617**	4	BOLT (5/16-18X0.75 IN)	
	5	1	**6V-8676**	1	SEAL-O-RING	

R-REMFG PART MAY BE AVAILABLE
Y-SEPARATE ILLUSTRATION

201-4201 PUMP GP-UNIT INJECTOR HYD *(contd.)* i01741277

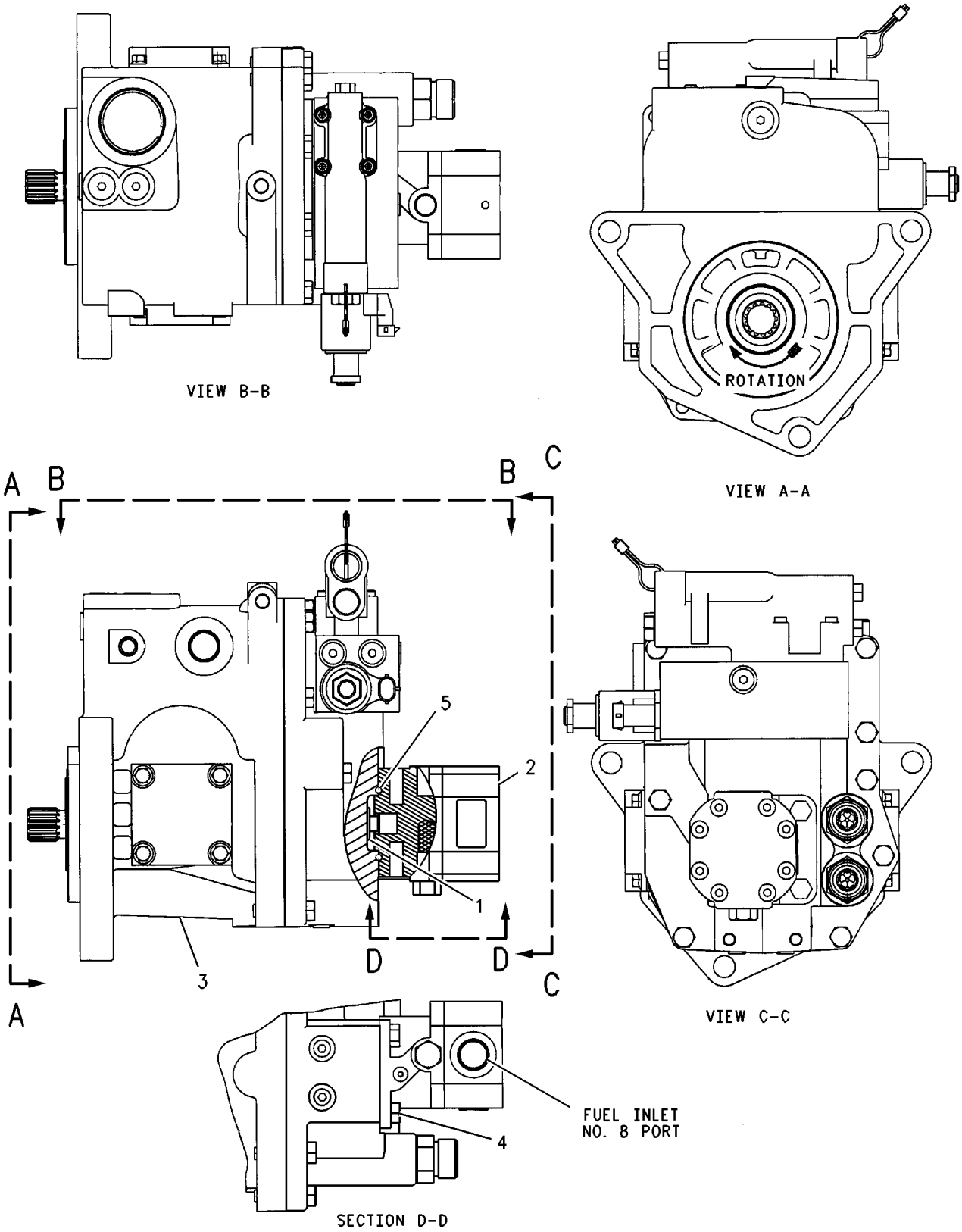

GRAPHIC #1 g00830144

FUEL SYSTEM

201-4202 PUMP GP-UNIT INJECTOR HYD*R

S/N: 80M4512-UP
PART OF 201-4201 PUMP GP-UNIT INJECTOR HYD
ALSO AN ATTACHMENT

SMCS-1714 **i01663744**

NOTE	REF NO	GRAPHIC REF	PART NUMBER	QTY	PART NAME 1 2 3 4 5 6 (PRODUCT LEVEL)	SEE PAGE
Y	1	1	**107-0677**	1	VALVE GP-SOLENOID (PRESSURE CONTROL)	1050
B	2	1	**161-8627**	1	KIT-PLUG (UNIT INJECTOR HYDRAULIC PUMP)	
					(INCLUDES PLUGS & SEALS)	
					(SELECT APPROPRIATE PLUG FROM KIT)	
	3	1	**9S-4180**	2	PLUG (5/16-24 THD)	
	4	1	**9S-8001**	2	PLUG (5/16-24 THD-HEX SOCKET HEAD)	
	5	1	**9S-8002**	3	PLUG (7/16-20 THD)	
	6	1	**9S-8004**	3	PLUG (9/16-18 THD)	
	7	1	**9S-8007**	1	PLUG (3/8-24 THD)	
	8	1	**138-4309**	2	FITTING	
	9	1	**138-4311**	2	SPRING	
	10	1	**138-4313**	2	VALVE	
	12	1	**164-0759**	4	BOLT-SOCKET HEAD (10-24X3.25 IN)	
	13	1	**201-4155**	1	SEAL-LIP TYPE	
F		1	**154-6734**	1	BEARING (REAR)	
F		1	**9X-7680**	3	SEAL-O-RING (7.65MM ID) (COMPENSATOR TO ADAPTER)	
F		1	**135-2652**	1	SEAL-O-RING (17.17MM ID) (COMPENSATOR TO ADAPTER)	
F		1	**174-8943**	1	SLEEVE (COMPENSATOR)	
					AVAILABLE REPAIR KIT(S):	
			154-6735	1	KIT-BEARING (YOKE)(UNIT INJECTOR HYD PUMP)	
					(INCLUDES A SET OF TWO YOKE BEARINGS)	
			166-5985	1	KIT-COMPENSATOR (UNIT INJECTOR HYDRAULIC PUMP)	
					(INCLUDES COMPENSATOR SUB ASSEMBLY, O-RING SEALS, SLEEVE, WIRE SEAL, LOCK WIRE & COMPENSATOR PLUGS)	
			201-4203	1	KIT-PUMP (REBUILD)(UNIT INJ HYD PUMP)	
					(INCLUDES YOKE, SHAFT, CONTROL PISTON, SEAL KIT & FRONT BEARING)	
Y			**138-6256**	1	KIT-SEAL (UNIT INJECTOR HYDRAULIC PUMP)	260

B-USE AS REQUIRED
F-NOT SHOWN
Y-SEPARATE ILLUSTRATION

201-4202 PUMP GP-UNIT INJECTOR HYD *(contd.)* i01663744

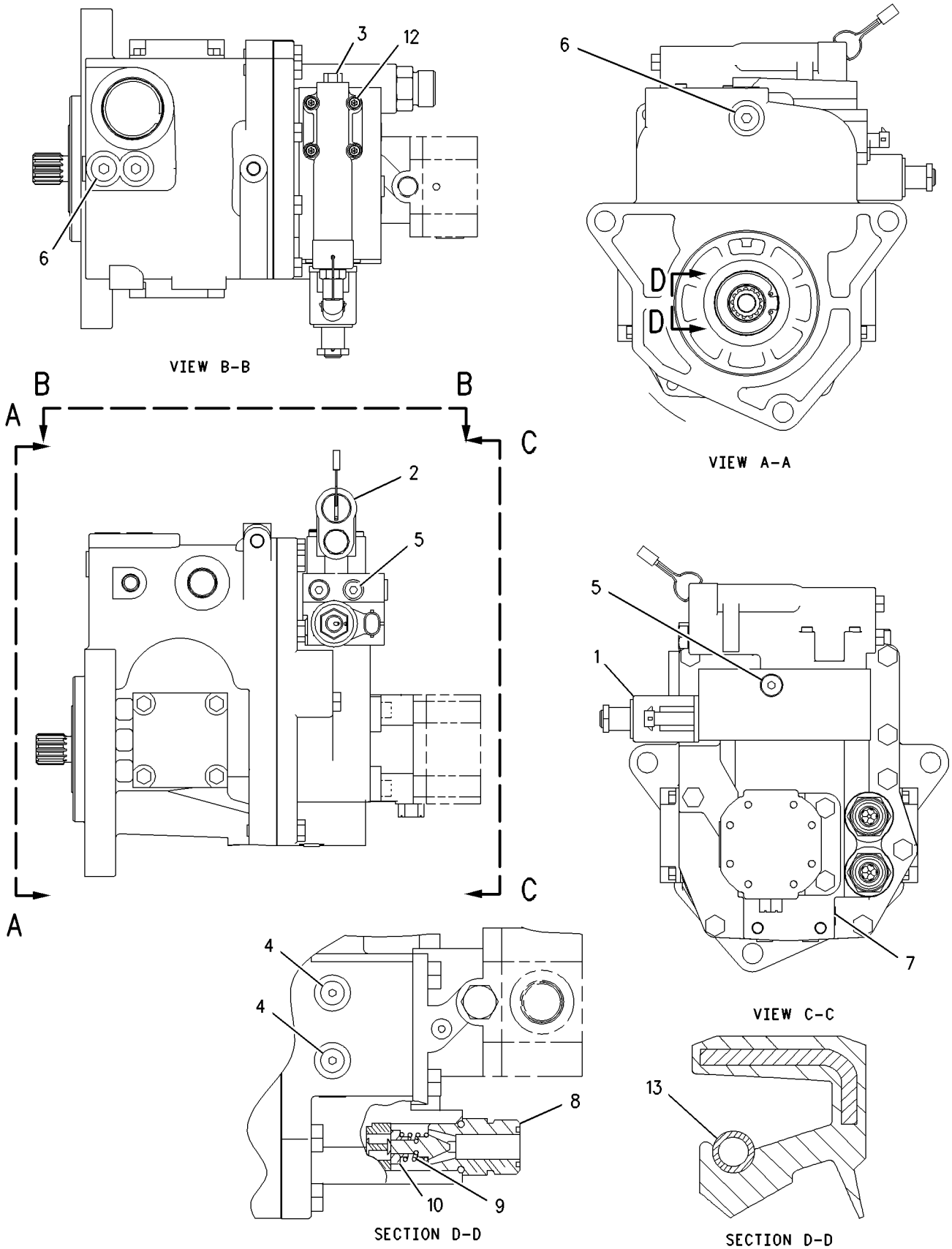

GRAPHIC #1 g00859085

FUEL SYSTEM

114-5633 TANK GP-FUEL

S/N: 3KR1-1560

SMCS-1273 **i01400915**

NOTE	REF NO	GRAPHIC REF	PART NUMBER	QTY	PART NAME 1 2 3 4 5 6 (PRODUCT LEVEL)	SEE PAGE
	1	1	**5P-8502**	1	PADLOCK GP	
A		1	**5P-8500**	1	KEY	
A		1	**8Y-6364**	1	SLEEVE	
	2	1	**6T-6080**	8	MOUNTING	
J	3	1	**7X-7700**	1	CAP AS-FUEL TANK	
		1	**9X-8600**	1	SEAL-O-RING (110.49MM ID)	
	4	1	**9P-7121**	1	STRAINER-FUEL	
	5	1	**116-3307**	1	TANK AS	
	6	1	**5P-6652**	4	WASHER (20X44.5X6MM THK)	
	7	1	**6T-6079**	4	WASHER-RETAINING	
	8	1	**8T-4223**	4	WASHER-HARD (13.5X25.5X3MM THK)	
	9	1	**0S-1627**	4	BOLT (3/4-10X4.5IN)	
	10	1	**3J-2903**	1	COVER	
	11	1	**4H-9027**	1	PLUG-PIPE	
	12	1	**4J-0527**	1	SEAL-O-RING (56.74MM ID)	
	13	1	**5P-2228**	4	BOLT (1/2-13X1 IN)	
					AVAILABLE REPAIR KIT(S):	
J			**9X-2205**	1	KIT-CAP FILTER (FUEL TANK)	
					(INCLUDES FILTER AS, SCREWS, VALVE & 4 GASKETS)	

A-NOT PART OF THIS GROUP
J-KIT MARKED J SERVICES PART MARKED J

114-5633 **TANK GP-FUEL** *(contd.)* **i01400915**

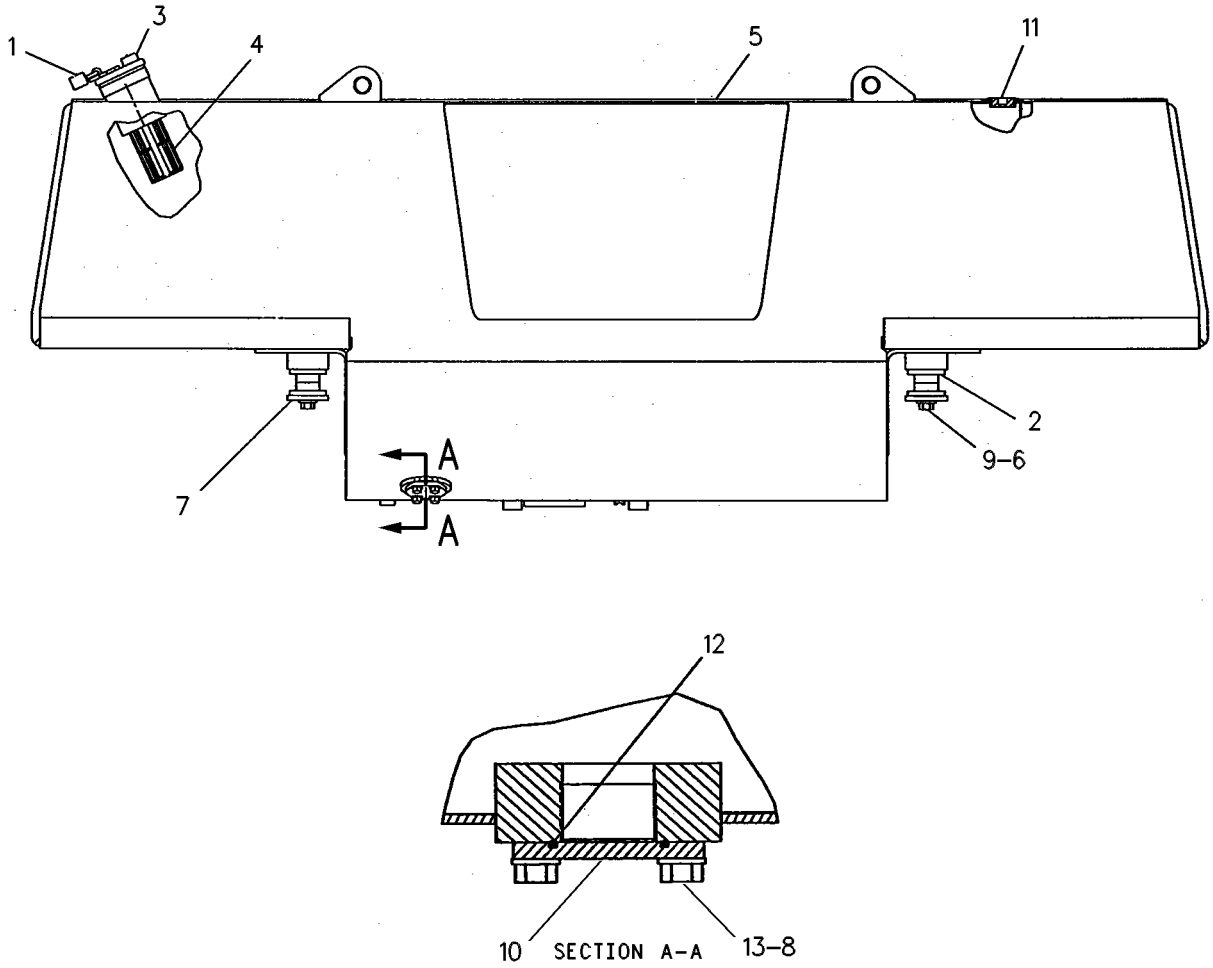

GRAPHIC #1 g00252683

FUEL SYSTEM

135-3199 TANK GP-FUEL

S/N: 3KR1-UP
PART OF 130-9720 HEATER AR
AN ATTACHMENT

SMCS-1273 **i01659923**

NOTE	REF NO	GRAPHIC REF	PART NUMBER	QTY	PART NAME 1 2 3 4 5 6 (PRODUCT LEVEL)	SEE PAGE
	1	1	**135-3200**	1	PLATE AS	
		1	**1F-0750**	2	NUT-WELD (3/8-16 THD)	
		1	**9M-3838**	2	BRACKET	
	2	1	**4L-6454**	4	BOLT (3/8-16X1 IN)	
	3	1	**5P-1075**	2	WASHER-HARD (10.2X22.5X3MM THK)	
	4	1	**6V-9806**	1	UNION-90 DEGREE	
	5	1	**4J-5477**	8	SEAL-O-RING	
	6	1	**135-3206**	1	TANK AS-FUEL	
	7	1	**6V-8729**	1	UNION-FACE SEAL	
	8	1	**135-3202**	1	COVER AS	
		1	**8P-0612**	2	BRACKET	
I	9	1	**135-3209**	1	HOSE AS	
E	10	1	**8C-5063**	2	CONDUIT-FLEXIBLE (150CM EACH)	
	11	1	**135-3205**	1	FENDER AS	
		1	**1F-0748**	1	NUT-WELD (1/2-13 THD)	
		1	**1F-0750**	2	NUT-WELD (3/8-16 THD)	
		1	**5P-2346**	1	GUSSET	
		1	**7T-1099**	16	LINK	
		1	**8P-0612**	2	BRACKET	
		1	**8T-5911**	3	NUT-WELD (1/2-13 THD)	
		1	**8T-5912**	7	NUT-WELD (3/8-16 THD)	
		1	**9W-0648**	1	HINGE	
		1	**8F-9836**	3	BOSS-THREADED	
		1	**111-0613**	1	COVER AS	
		1	**1F-0750**	9	NUT-WELD (3/8-16 THD)	
		1	**9M-3838**	2	BRACKET	
	12	1	**9B-7237**	3	BOLT (3/8-16X1.25 IN)	
	13	1	**8T-4896**	5	WASHER-HARD (10.2X18.5X2.5MM THK)	
I	14	1	**110-8485**	2	HOSE AS	
	15	1	**109-1364**	1	PLATE	
	16	1	**039-6360**	4	RIVET	
	17	1	**9M-3835**	2	LATCH-RUBBER	
	18	1	**2M-5795**	2	PIN-CLEVIS	
	19	1	**3B-4605**	2	PIN-COTTER	
	20	1	**1Q-3828**	1	GAUGE & CAP AS	
	21	1	**8T-2502**	2	BOLT (3/8-16X1.125 IN)	
	22	1	**7X-0772**	2	WASHER-HARD (10.2X25.5X2.5MM THK)	
	23	1	**6V-0484**	1	ADAPTER-O-RING	
	24	1	**3J-1907**	5	SEAL-O-RING	
	25	1	**8T-6907**	1	VALVE-BALL	
	26	1	**5P-1046**	1	CONNECTOR	
	27	1	**5P-4961**	1	CLAMP-HOSE	
E	28	1	**5P-1442**	1	HOSE (25CM)	
	29	1	**6V-8627**	2	ELBOW	
	30	1	**1Q-3363**	1	FILTER AS	
		1	**1Q-2541**	1	CARTRIDGE-FILTER	
		1	**1Q-3369**	1	WASHER-BRASS	
	31	1	**1Q-3366**	1	ADAPTER	
	32	1	**1Q-3309**	1	VALVE AS	
	33	1	**1Q-3310**	1	FITTING-SWIVEL	
	34	1	**1Q-3367**	1	ADAPTER	

E-ORDER BY THE CENTIMETER
I-SEE HOSE FABRICATION GUIDE

135-3199 **TANK GP-FUEL** ***(contd.)*** **i01659923**

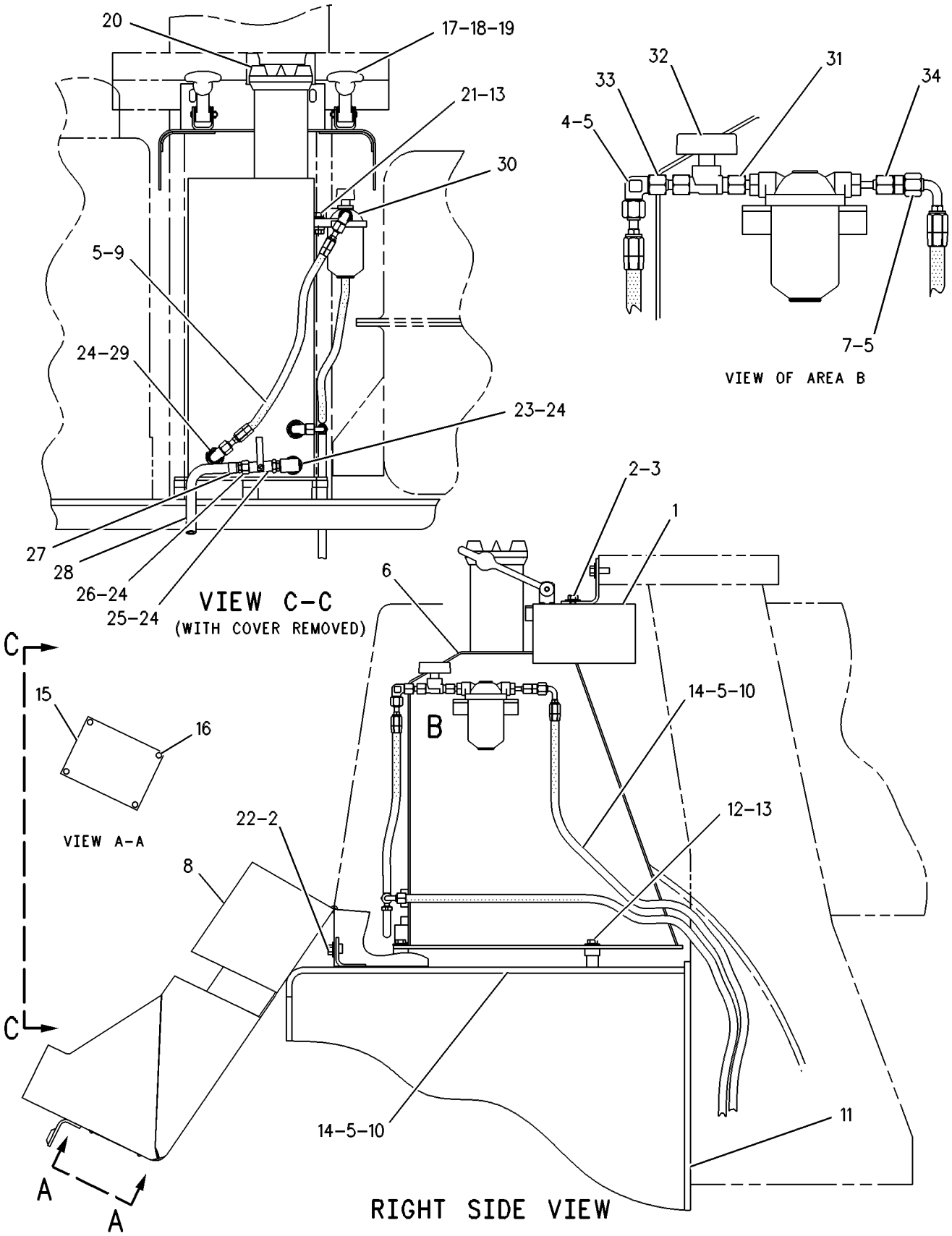

GRAPHIC #1 g00330578

FUEL SYSTEM

174-7468 TANK GP-FUEL

S/N: 3KR1561-UP

SMCS-1273 **i01435899**

NOTE	REF NO	GRAPHIC REF	PART NUMBER	QTY	PART NAME 1 2 3 4 5 6 (PRODUCT LEVEL)	SEE PAGE
	1	1	**5P-8502**	1	PADLOCK GP	
A		1	**5P-8500**	1	KEY	
A		1	**8Y-6364**	1	SLEEVE	
	2	1	**6T-6080**	8	MOUNTING	
	3	1	**9P-7121**	1	STRAINER-FUEL TANK	
Y	4	1	**205-4276**	1	TANK GP-FUEL	313
	5	1	**0S-1627**	4	BOLT (3/4-10X4.5IN)	
	6	1	**5P-6652**	4	WASHER (20X44.5X6MM THK)	
	7	1	**6T-6079**	4	WASHER (20X100X12MM THK)	

A-NOT PART OF THIS GROUP
Y-SEPARATE ILLUSTRATION

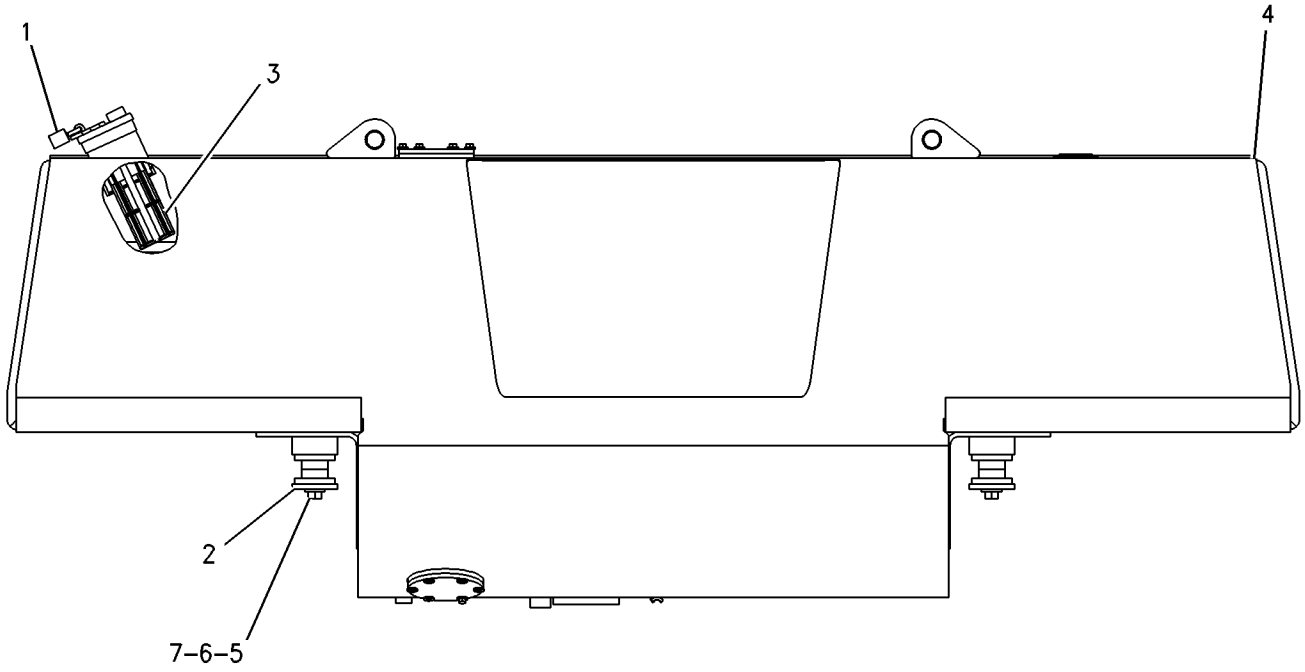

REAR VIEW

GRAPHIC #1 g00806601

FUEL SYSTEM

205-4276 TANK GP-FUEL

S/N: 3KR1-UP

PART OF 174-7468 TANK GP-FUEL

SMCS-1273 **i01581808**

NOTE	REF NO	GRAPHIC REF	PART NUMBER	QTY	PART NAME 1 2 3 4 5 6 (PRODUCT LEVEL)	SEE PAGE
	1	1	**7X-7700**	1	CAP AS-FUEL TANK	
		1	**9X-2205**	1	KIT-CAP FILTER (FUEL TANK)	
					(INCLUDES FILTER AS, GASKETS, VALVE & SCREW)	
		1	**9X-8600**	1	SEAL-O-RING	
	2	1	**164-3417**	1	COVER	
	3	1	**174-7469**	1	TANK AS-FUEL	
	4	1	**187-1679**	1	COVER	
	5	1	**1H-8128**	1	SEAL-O-RING	
		1	**5K-1770**	1	SEAL-O-RING	
	6	1	**4L-6454**	12	BOLT (3/8-16X1 IN)	
	7	1	**5H-6734**	1	SEAL-O-RING	
	8	1	**5P-1075**	6	WASHER-HARD (10.2X22.5X3MM THK)	
	9	1	**8T-4896**	6	WASHER-HARD (10.2X18.5X2.5MM THK)	

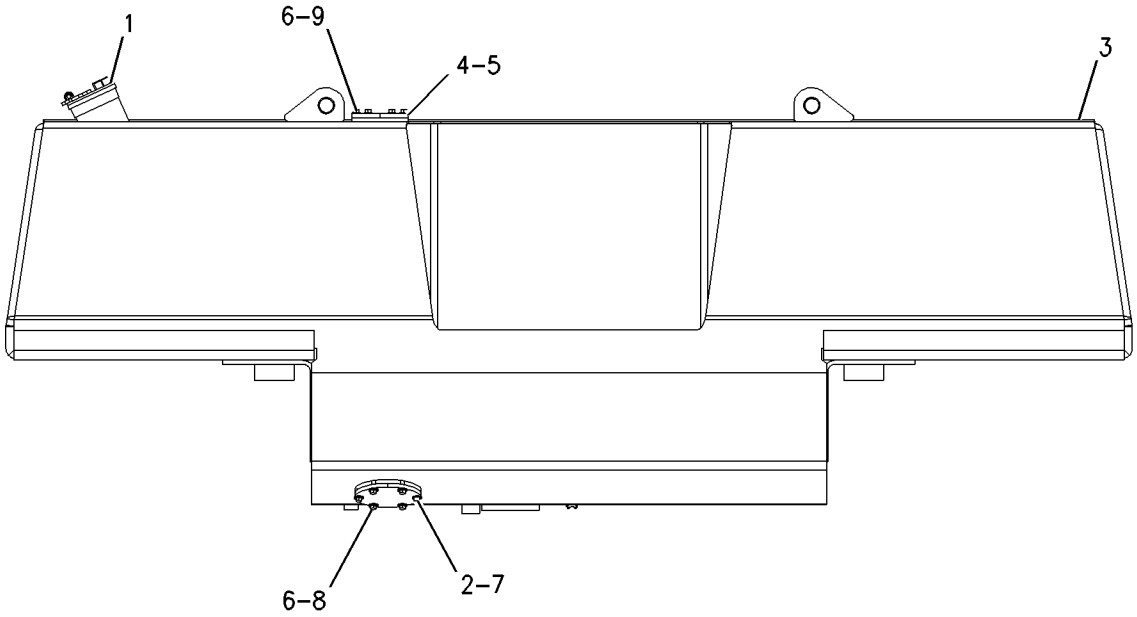

GRAPHIC #1 g00816582

FUEL SYSTEM

102-7535 VALVE GP-PRESSURE CONTROL—FUEL

S/N: 80M1-UP
PART OF 128-5107 LINES GP-FUEL FILTER
ALSO AN ATTACHMENT

SMCS-1715 **i01741304**

NOTE	REF NO	GRAPHIC REF	PART NUMBER	QTY	PART NAME 1 2 3 4 5 6 (PRODUCT LEVEL)	SEE PAGE
	1	1	**033-6033**	1	SEAL-O-RING	
	2	1	**6V-6923**	1	RING-BACKUP	
	3	1	**6V-4589**	1	SEAL-O-RING	

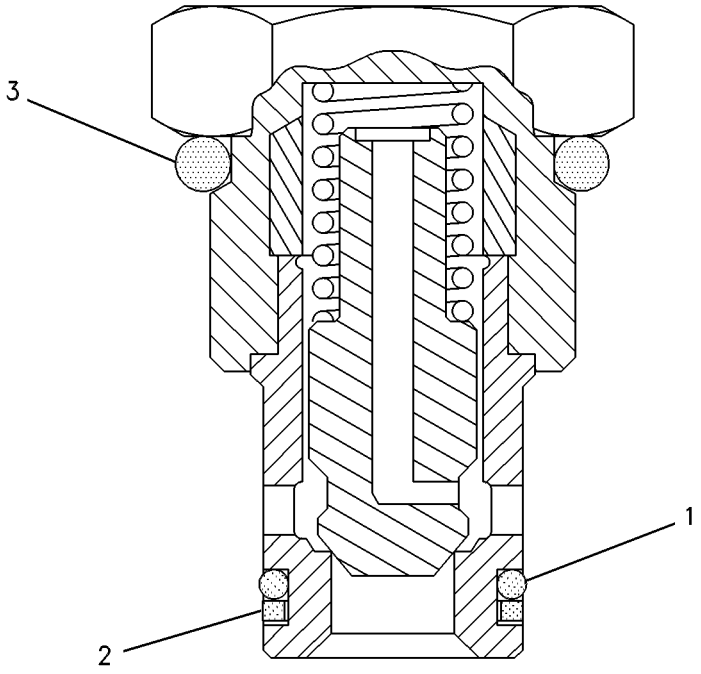

GRAPHIC #1 g00278840

3E-6328 ALARM GP

S/N: 3KR1-UP
24 VOLT
PART OF 109-5750, 114-6664 WIRING GP-PLATFORM

SMCS-7402 **i01741309**

NOTE	REF NO	GRAPHIC REF	PART NUMBER	QTY	PART NAME 1 2 3 4 5 6 (PRODUCT LEVEL)	SEE PAGE
J	1	1	**102-8802**	1	KIT-RECEPTACLE (2 PIN)	
					(INCLUDES RECEPTACLE AS & PART MARKED J)	
	2	1	**186-3735**	2	PIN-CONNECTOR	
J	3	1	**3E-3365**	1	WEDGE-RECEPTACLE LOCK (2 PIN)	
J-KIT MARKED J INCLUDES PART MARKED J						

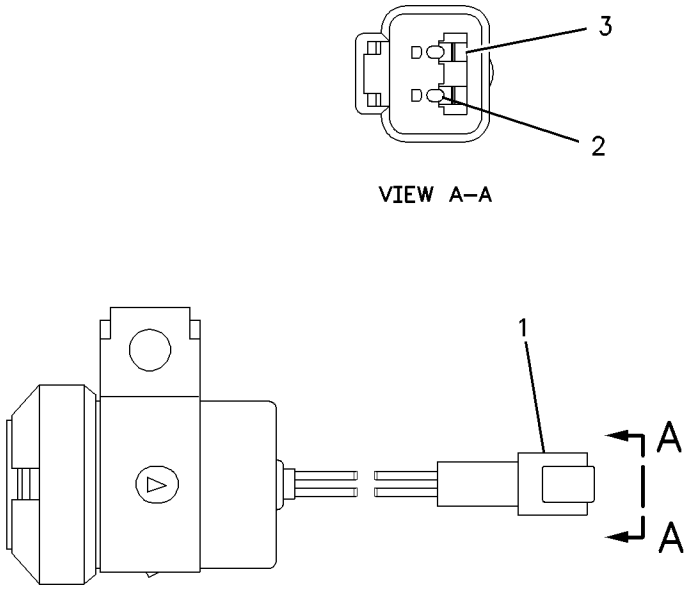

GRAPHIC #1 g00826023

127-8787 ALTERNATOR AR-CHARGING

S/N: 3KR1-UP
100 AMPERE
PART OF 130-3859 WASTE HANDLING AR
AN ATTACHMENT

SMCS-1405 **i00601196**

NOTE	PART NUMBER	QTY	PART NAME 1 2 3 4 5 6 (PRODUCT LEVEL)	SEE PAGE
Y	*9Q-3673*	1	ALTERNATOR GP-CHARGING	318

Y-SEPARATE ILLUSTRATION

<END>

MEMORANDA

ELECTRICAL AND STARTING SYSTEM

9Q-3673 ALTERNATOR GP-CHARGING

S/N: 3KR1-UP
24 VOLT, 100 AMPERE
PART OF 127-8787 ALTERNATOR AR-CHARGING
AN ATTACHMENT

SMCS-1405, 1410, 1425 **i01662502**

NOTE	REF NO	GRAPHIC REF	PART NUMBER	QTY	PART NAME 1 2 3 4 5 6 (PRODUCT LEVEL)	SEE PAGE
YR	1	1	**9X-7803**	1	ALTERNATOR GP-CHARGING (24VOLT, 100AMP)	320
	2	1	**8T-8919**	2	BOLT (1/2-13X1.75 IN)	
	3	1	**8T-4223**	3	WASHER-HARD (13.5X25.5X3MM THK)	
	4	1	**115-2151**	1	BRACKET-ALTERNATOR	
	5	1	**8S-5383**	1	BLOCK	
	6	1	**8T-4835**	1	BOLT (1/2-13X2 IN)	
	7	1	**8T-4896**	4	WASHER-HARD (10.2X18.5X2.5MM THK)	
	8	1	**7X-0448**	2	NUT (5/8-11 THD)	
	9	1	**4L-6454**	2	BOLT (3/8-16X1 IN)	
	10	1	**4S-5780**	1	ROD	
	11	1	**7X-0591**	2	WASHER-HARD (17X29X3MM THK)	
	12	1	**7X-0346**	1	BOLT (5/8-11X2 IN)	
	13	1	**5S-7382**	3	BOLT (3/8-16X1.375 IN)	
	14	1	**7X-0293**	1	BOLT (3/8-16X4.75 IN)	
	15	1	**8Q-1963**	1	PULLEY-ALTERNATOR	
	16	1	**4N-2531**	1	V-BELT	
	17	1	**7C-5287**	1	CABLE AS	
	18	1	**8T-4122**	1	WASHER-HARD (17X32X3.5MM THK)	
	19	1	**5P-1075**	2	WASHER-HARD (10.2X22.5X3MM THK)	
	20	1	**188-2034**	1	PAN AS-DRIP	

R-REMFG PART MAY BE AVAILABLE
Y-SEPARATE ILLUSTRATION

9Q-3673 **ALTERNATOR GP-CHARGING** *(contd.)* **i01662502**

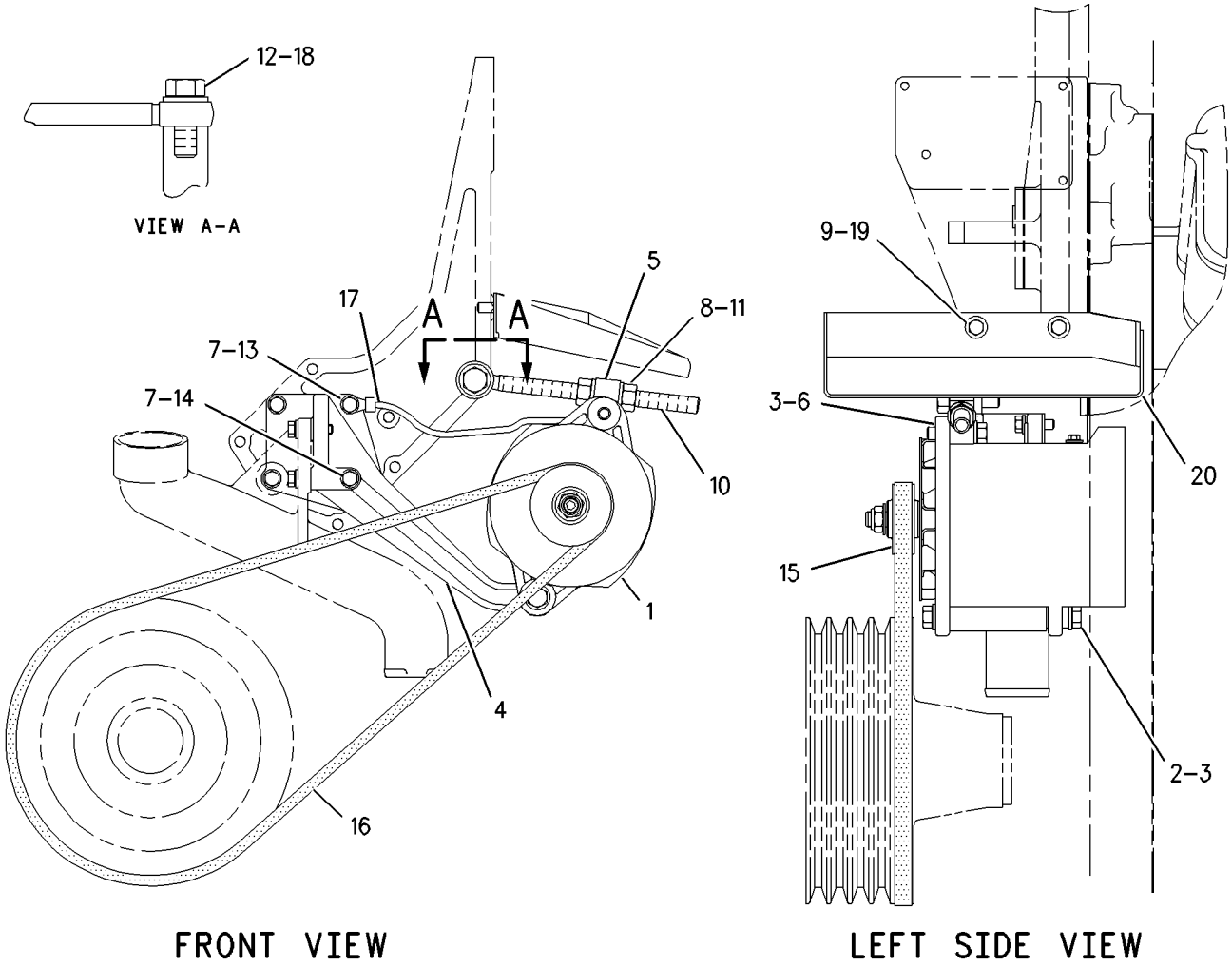

GRAPHIC #1 g00877209

9X-7803 ALTERNATOR GP-CHARGING*R

S/N: 3KR1-UP
24 VOLT, 100 AMPERE
PART OF 9Q-3673 ALTERNATOR GP-CHARGING
AN ATTACHMENT

SMCS-1405, 1410, 1425 **i01727086**

NOTE	REF NO	GRAPHIC REF	PART NUMBER	QTY	PART NAME 1 2 3 4 5 6 (PRODUCT LEVEL)	SEE PAGE
	1	1	**8T-4205**	2	WASHER-HARD (7.2X14.5X2MM THK)	
	2	1	**9X-2500**	4	SCREW-HEX FLANGE (10-24 X 38.1MM)	
	3	1	**6V-8187**	1	NUT (1/4-28 THD)	
	4	1	**5S-7349**	1	BOLT (1/4-20X0.5 IN)	
	5	1	**9L-6770**	1	CAP	
	6	1	**9N-0943**	1	PLUG-BEARING WELL	
	7	1	**5P-3418**	1	BEARING-ROLLER	
	8	1	**5P-3419**	1	RACE-BEARING INNER	
	9	1	**9L-6776**	1	RECTIFIER AS	
	10	1	**6N-1944**	1	DIODE AS	
	11	1	**3T-6354**	1	REGULATOR AS (24 VOLT) (ALTERNATOR)	
	12	1	**105-3763**	1	CAPACITOR AS-ALTERNATOR	
	13	1	**5P-7807**	1	BALL BEARING	
	14	1	**100-6531**	1	FAN-ALTERNATOR	
	15	1	**2K-4821**	1	LOCKNUT (5/8-18 THD)	
	16	1	**9S-2009**	4	SCREW-HEAD (10-24 X 3.625 IN)	
	17	1	**6N-1872**	2	SCREW AS (8-32 X 1.25 IN)	
	18	1	**7N-9023**	1	SCREW AS (8-32 X 26.9MM)	
	19	1	**106-7689**	1	CONNECTOR-ALTERNATOR	
	20	1	**106-7690**	1	CONNECTOR-ALTERNATOR	
	21	1	**9S-2544**	2	SCREW-HEX HEAD (8-32X11.13MM)	
	22	1	**100-6532**	1	COLLAR-ALTERNATOR	
	23	1	**2L-8075**	3	TERMINAL	
	24	1	**7N-9021**	2	SCREW AS (8-32X1.34 IN)	
	25	1	**9S-2302**	1	ROTOR AS	
	26	1	**9N-0942**	1	PLATE-COVER	
	27	1	**9N-3388**	5	BOLT (10-24X.75 IN)	
	28	1	**106-7687**	1	HOUSING AS-ALTERNATOR	
	29	1	**2P-5616**	1	FRAME-DRIVE END	
	30	1	**8T-9762**	1	STATOR AS	
	31	1	**202-2703**	1	COIL AS	
	32	1	**9S-2390**	1	RETAINER	
	33	1	**030-9612**	4	SCREW-FORMING (10-24X.5 IN)	
	34	1	**7F-7621**	1	WASHER (0.635X1.25X0.09 IN THK)	
	35	1	**8T-0328**	2	WASHER-HARD (5.5X10X1MM THK)	
	36	1	**1H-3244**	2	LOCKWASHER	
	37	1	**9B-7233**	2	LOCKWASHER	
					AVAILABLE REPAIR KIT(S):	
			9S-2013	1	KIT-RELAY TERMINAL (ALTERNATOR)	
					(INCLUDES BUSHING, WASHERS, NUT AS, & STUD)	
			105-3764	1	KIT-ALTERNATOR TERMINAL	
					(INCLUDES TERMINAL AS, INSULATOR, BUSHING, WASHER, NUTS & LOCKWASHERS)	

9X-7803 ALTERNATOR GP-CHARGING *(contd.)* **i01727086**

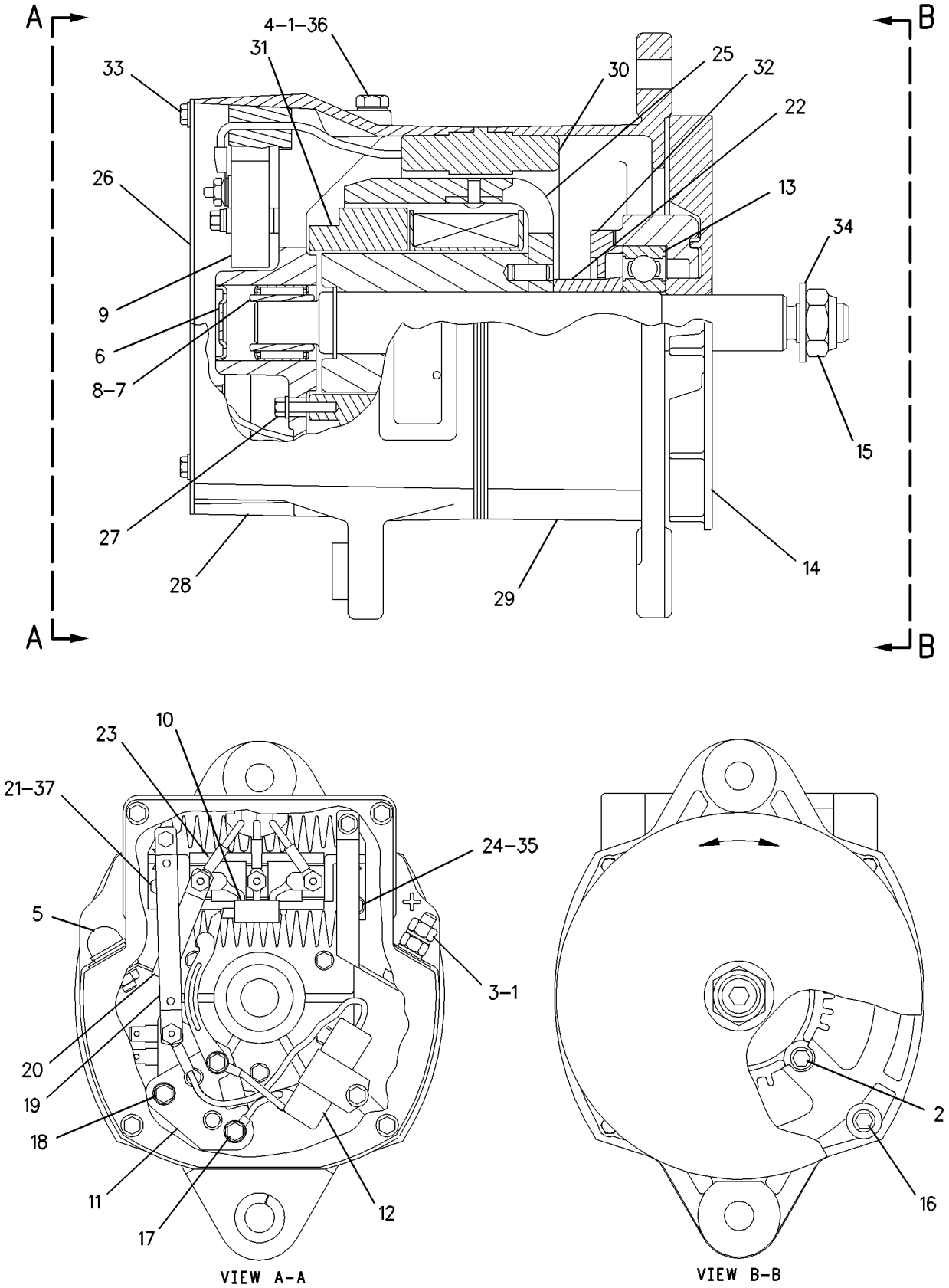

GRAPHIC #1 g00741720

ELECTRICAL AND STARTING SYSTEM

114-2401 ALTERNATOR GP-CHARGING*R

S/N: 3KR1-UP
24 VOLT, 75 AMP
PART OF 115-0496 ALTERNATOR GP-CHARGING

SMCS-1405, 1410, 1425 **i01677346**

NOTE	REF NO	GRAPHIC REF	PART NUMBER	QTY	PART NAME 1 2 3 4 5 6 (PRODUCT LEVEL)	SEE PAGE
	1	1	**8T-4205**	2	WASHER-HARD (7.2X14.5X2MM THK)	
		1	**1H-3244**	2	LOCKWASHER	
	2	1	**9X-2500**	4	SCREW-HEX FLANGE (10-24 X 38.1MM)	
	3	1	**6V-8187**	1	NUT (1/4-28 THD)	
	4	1	**5S-7349**	1	BOLT (1/4-20X0.5 IN)	
	5	1	**9L-6770**	1	CAP	
	6	1	**9N-0943**	1	PLUG-BEARING WELL	
	7	1	**5P-3418**	1	BEARING-ROLLER	
	8	1	**5P-3419**	1	RACE-BEARING INNER	
	9	1	**9L-6776**	1	RECTIFIER AS	
	10	1	**6N-1944**	1	DIODE AS	
	11	1	**3T-6354**	1	REGULATOR AS (24 VOLT)	
	12	1	**105-3763**	1	CAPACITOR AS-ALTERNATOR	
	13	1	**5P-7807**	1	BALL BEARING	
	14	1	**100-6531**	1	FAN-ALTERNATOR	
	15	1	**2K-4821**	1	LOCKNUT (5/8-18 THD)	
		1	**7F-7621**	1	WASHER (0.635X1.25X0.09 IN THK)	
	16	1	**9S-2009**	4	SCREW-HEAD (10-24 X 3.625 IN)	
	17	1	**6N-1872**	2	SCREW AS (8-32 X 1.25 IN)	
	18	1	**7N-9023**	1	SCREW AS (8-32 X 26.9MM)	
	19	1	**106-7689**	1	CONNECTOR-ALTERNATOR	
	20	1	**106-7690**	1	CONNECTOR-ALTERNATOR	
	21	1	**9B-7233**	6	LOCKWASHER	
	22	1	**100-6532**	1	COLLAR-ALTERNATOR	
	23	1	**2L-8075**	3	TERMINAL (14-16 GA) (4.17MM)	
	24	1	**7N-9021**	2	SCREW AS	
	25	1	**9S-2302**	1	ROTOR AS	
	26	1	**9N-0942**	1	PLATE-COVER	
	27	1	**7X-3353**	5	SCREW-HEX HEAD (10 X 24 X 19.05MM)	
	28	1	**106-7687**	1	HOUSING AS-ALTERNATOR	
	29	1	**2P-5616**	1	FRAME-DRIVE END	
	30	1	**117-9690**	1	STATOR AS-ALTERNATOR	
	31	1	**6N-1945**	1	COIL AS-FIELD	
	32	1	**9S-2390**	1	RETAINER	
	33	1	**4B-2043**	4	NUT (8-32 THD)	
	34	1	**9S-2544**	2	SCREW-HEX HEAD (8-32X11.13MM)	
	35	1	**8T-0328**	11	WASHER-HARD (5.5X10X1MM THK)	
	36	1	**030-9612**	4	SCREW-FORMING (10-24X.5 IN)	
					AVAILABLE REPAIR KIT(S):	
			9S-2013	1	KIT-RELAY TERMINAL	
					(INCL BUSHING, WASHERS, NUT AS, & STUD)	
			105-3764	1	KIT-ALTERNATOR TERMINAL	
					(INCL TERMINAL AS, INSULATOR, BUSHING, WASHER, NUTS & LOCKWASHERS)	

114-2401 **ALTERNATOR GP-CHARGING** *(contd.)* **i01677346**

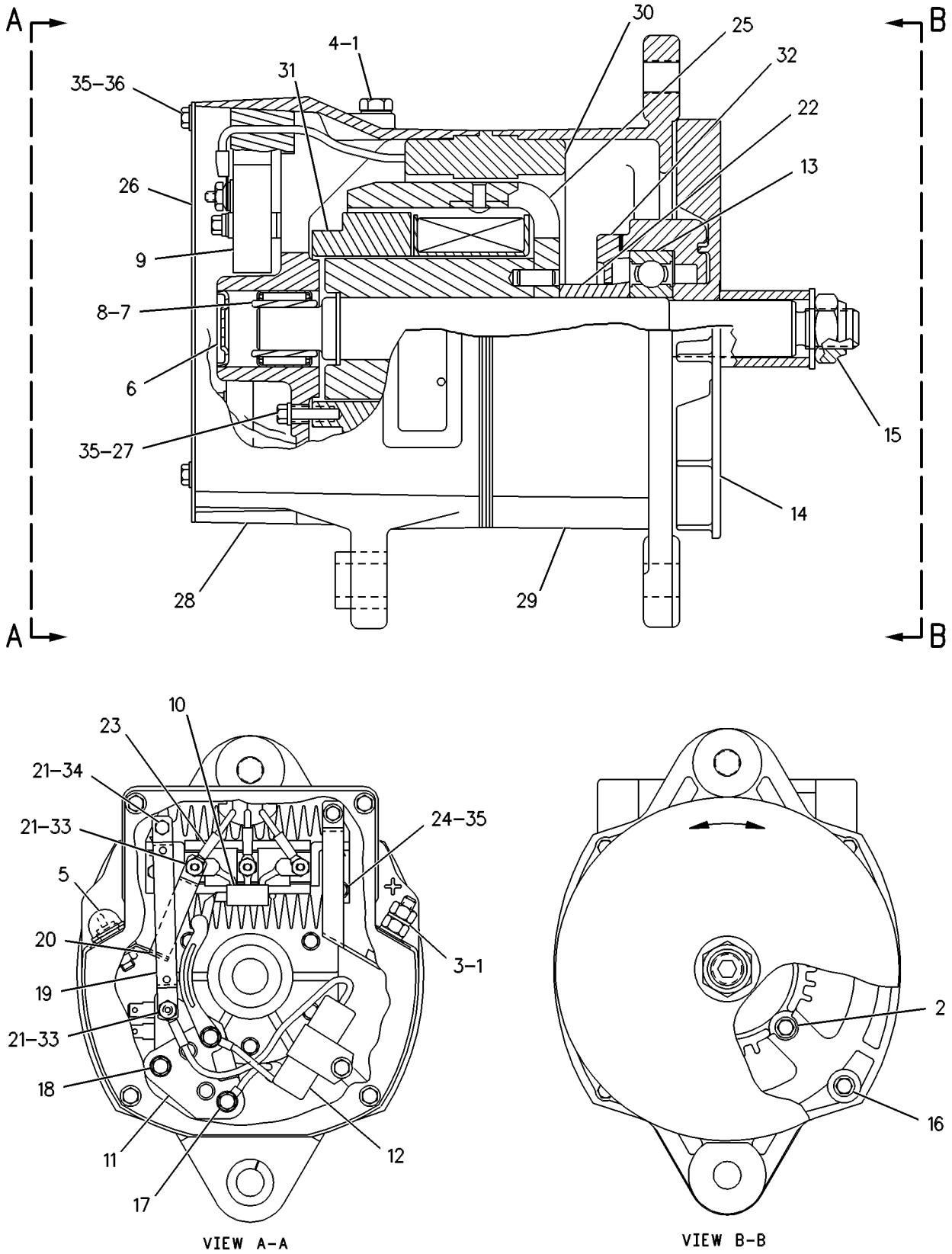

GRAPHIC #1 g00120853

ELECTRICAL AND STARTING SYSTEM

115-0496 ALTERNATOR GP-CHARGING

S/N: 3KR1-402
24 VOLT, 75 AMP

SMCS-1405, 1410, 1425 **i01400917**

NOTE	REF NO	GRAPHIC REF	PART NUMBER	QTY	PART NAME 1 2 3 4 5 6 (PRODUCT LEVEL)	SEE PAGE
YR	1	1	**114-2401**	1	ALTERNATOR GP-CHARGING	322
	2	1	**8T-8919**	2	BOLT (1/2-13X1.75 IN)	
	3	1	**8T-4223**	3	WASHER-HARD (13.5X25.5X3MM THK)	
	4	1	**115-2151**	1	BRACKET-ALTERNATOR	
	5	1	**8T-4835**	1	BOLT (1/2-13X2 IN)	
	6	1	**4L-6454**	2	BOLT (3/8-16X1 IN)	
		1	**5P-1075**	2	WASHER-HARD (10.2X22.5X3MM THK)	
	7	1	**8T-4896**	4	WASHER-HARD (10.2X18.5X2.5MM THK)	
	8	1	**7X-0448**	2	NUT (5/8-11 THD)	
	9	1	**8S-5383**	1	BLOCK	
	10	1	**4S-5780**	1	ROD	
	11	1	**7X-0591**	2	WASHER-HARD (17X29X3MM THK)	
	12	1	**7X-0346**	1	BOLT (5/8-11X2 IN)	
	13	1	**5S-7382**	3	BOLT (3/8-16X1.375 IN)	
	14	1	**7X-0293**	1	BOLT (3/8-16X4.75IN)	
	15	1	**4N-8225**	1	PULLEY-ALTERNATOR	
	16	1	**6N-6657**	1	V-BELT	
	17	1	**7C-5287**	1	CABLE AS	
	18	1	**8T-4122**	1	WASHER-HARD (17X32X3.5MM THK)	
	19	1	**117-1158**	1	PAN AS-DRIP	
	20	1	**5S-0581**	1	WASHER-HARD (17X38X8MM THK)	

R-REMFG PART MAY BE AVAILABLE
Y-SEPARATE ILLUSTRATION

115-0496 **ALTERNATOR GP-CHARGING** *(contd.)* **i01400917**

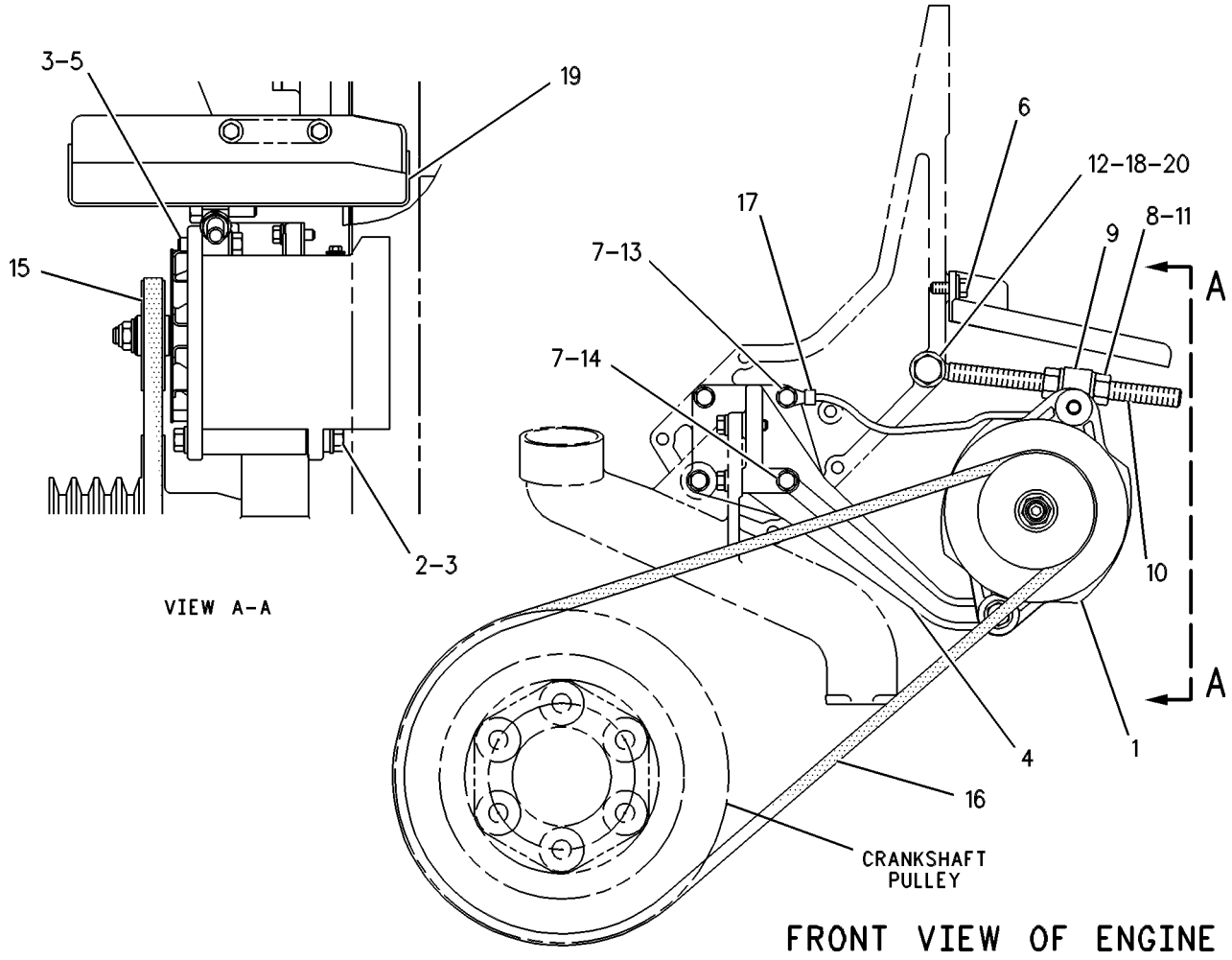

GRAPHIC #1 g00257422

ELECTRICAL AND STARTING SYSTEM

115-0496 ALTERNATOR GP-CHARGING

S/N: 3KR403-UP
24 VOLT, 75 AMP

SMCS-1405, 1410, 1425 **i01400920**

NOTE	REF NO	GRAPHIC REF	PART NUMBER	QTY	PART NAME 1 2 3 4 5 6 (PRODUCT LEVEL)	SEE PAGE
YR	1	1	**114-2401**	1	ALTERNATOR GP-CHARGING	322
	2	1	**8T-8919**	2	BOLT (1/2-13X1.75 IN)	
	3	1	**8T-4223**	3	WASHER-HARD (13.5X25.5X3MM THK)	
	4	1	**115-2151**	1	BRACKET-ALTERNATOR	
	5	1	**8T-4835**	1	BOLT (1/2-13X2 IN)	
	6	1	**4L-6454**	2	BOLT (3/8-16X1 IN)	
		1	**5P-1075**	2	WASHER-HARD (10.2X22.5X3MM THK)	
	7	1	**8T-4896**	4	WASHER-HARD (10.2X18.5X2.5MM THK)	
	8	1	**7X-0448**	2	NUT (5/8-11 THD)	
	9	1	**8S-5383**	1	BLOCK	
	10	1	**4S-5780**	1	ROD	
	11	1	**7X-0591**	2	WASHER-HARD (17X29X3MM THK)	
	12	1	**7X-0346**	1	BOLT (5/8-11X2 IN)	
	13	1	**5S-7382**	3	BOLT (3/8-16X1.375 IN)	
	14	1	**7X-0293**	1	BOLT (3/8-16X4.75IN)	
	15	1	**4N-8225**	1	PULLEY-ALTERNATOR	
C	16	1	**9L-6645**	1	V-BELT	
	17	1	**7C-5287**	1	CABLE AS	
	18	1	**8T-4122**	1	WASHER-HARD (17X32X3.5MM THK)	
	19	1	**188-2034**	1	PAN AS-DRIP	

C-CHANGE FROM PREVIOUS TYPE
R-REMFG PART MAY BE AVAILABLE
Y-SEPARATE ILLUSTRATION

115-0496 **ALTERNATOR GP-CHARGING** *(contd.)* **i01400920**

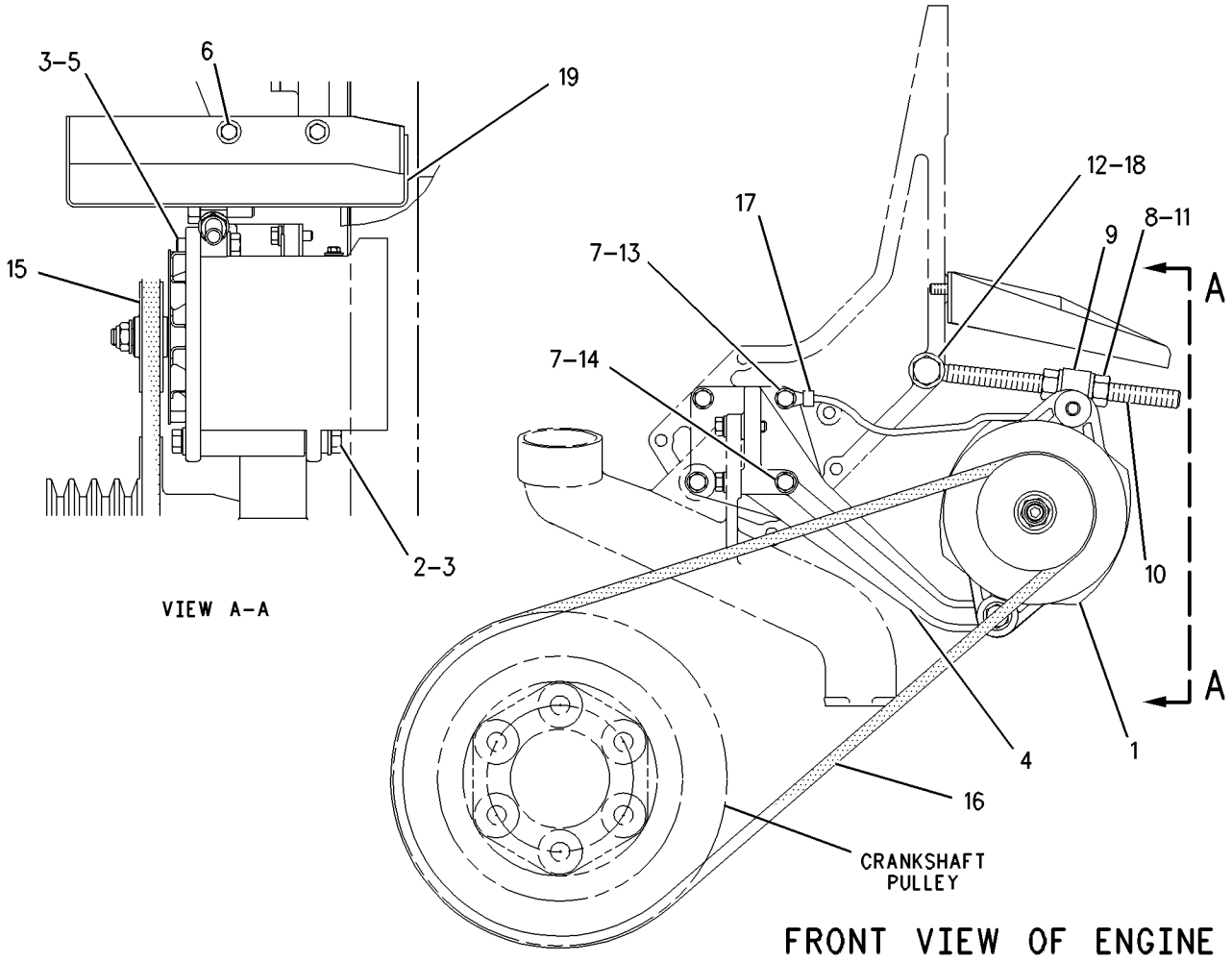

GRAPHIC #1 g00720145

ELECTRICAL AND STARTING SYSTEM

106-8484 BATTERY & WIRING GP

S/N: 3KR1-579

SMCS-1401, 1402, 1408 **i01741330**

NOTE	REF NO	GRAPHIC REF	PART NUMBER	QTY	PART NAME 1 2 3 4 5 6 (PRODUCT LEVEL)	SEE PAGE
	1	1	**106-8485**	1	HARNESS AS-RADIATOR	
	2	1,2,3,4	**7K-1181**	50	STRAP-CABLE	
	3	1	**7T-0970**	1	HORN AS (24 VOLT)(HIGH TONE)	
		1	**096-6166**	2	WASHER-HARD (4.5X9X1MM THK)	
M		1	**8C-7581**	2	SCREW-MACHINE (M4X0.7X8MM)	
		1	**9B-7233**	2	LOCKWASHER	
	4	1	**7T-0969**	1	HORN AS (24 VOLT)(LOW TONE)	
		1	**096-6166**	2	WASHER-HARD (4.5X9X1MM THK)	
M		1	**8C-7581**	2	SCREW-MACHINE (M4X0.7X8MM)	
		1	**9B-7233**	2	LOCKWASHER	
	5	1	**9B-7237**	2	BOLT (3/8-16X1.25 IN)	
	6	1,2,3,4	**8T-4896**	26	WASHER-HARD (10.2X18.5X2.5MM THK)	
	7	1,3	**5S-7379**	6	BOLT (3/8-16X0.875 IN)	
	8	1	**9W-8666**	1	PLATE AS	
		1	**1F-0750**	2	NUT-WELD (3/8-16 THD)	
	9	1,2,3,4	**9X-6772**	80	STRAP-CABLE	
	10	1,2,3,4	**4P-7581**	32	CLIP	
	11	2,3	**5M-3062**	8	BOLT (3/8-16X0.75 IN)	
	12	1,2,3	**4P-8134**	5	CLIP (FLAT)	
	13	2	**5P-8167**	1	BOLT (3/8-16X0.625 IN)	
	14	1	**106-8491**	1	HARNESS AS-ENGINE	
	15	3	**113-4316**	1	PLATE AS	
		3	**109-1645**	3	CLIP	
		3	**6C-3680**	6	RIVET-POP	
	16	2	**8E-4260**	1	HOLD-DOWN AS	
		2	**9R-2078**	1	PLATE	
		2	**9X-9730**	2	BATTERY (12 VOLT)	
					(EACH INCLUDES)	
		2	**7N-0060**	6	VENT AS	
Y	17	2	**118-7226**	1	SENSOR GP-TEMPERATURE (POWERTRAIN OIL)	469
	18	3	**7T-9982**	1	CABLE AS	
		3	**1S-4915**	2	LINER-CONDUIT	
		3	**1S-7251**	1	TERMINAL-RING (FOR 1/2 IN BOLT)	
E		3	**8T-2225**		TUBE-HEAT SHRINK (23CM)	
		3	**8N-1725**	1	COVER-TERMINAL (RED)	
E		3	**5P-0695**		CONDUIT (142CM)	
E		3	**5P-0761**		CABLE (00GA)(RED) (160CM)	
		3	**8N-0869**	1	COVER-TERMINAL (RED)	
		3	**3S-2093**	1	STRAP-CABLE	
	19	2	**118-6365**	1	PLATE AS	
		2	**109-1645**	1	CLIP	
		2	**6C-3680**	2	RIVET-POP	
	20	3	**128-2976**	1	HARNESS AS (ETHER AID)	
	21	2	**4P-7429**	4	CLIP	
	22	2	**1A-2029**	1	BOLT (3/8-16X1.125 IN)	
Y	23	2	**118-7226**	1	SENSOR GP-TEMPERATURE (HYDRAULIC OIL)	469
	24	2	**2P-8421**	1	ADAPTER-O-RING	
	25	2	**3J-1907**	4	SEAL-O-RING	
	26	2	**3K-6060**	2	LOCKNUT (3/8-16 THD)	
	27	2,3	**6V-8801**	11	NUT (3/8-16 THD)	
	28	2	**7X-0291**	2	BOLT (3/8-16X3.75 IN)	
	29	2	**123-6449**	1	WARNING GP-BACKUP	
		2	**3E-3365**	1	WEDGE-RECEPTACLE LOCK (2 PIN)	
		2	**8T-8729**	2	PIN-CONNECTOR	
		2	**102-8802**	1	KIT-RECEPTACLE (2 PIN)	
					(INCLUDES WEDGE & RECEPTACLE AS)	
	30	2	**6S-1066**	2	GROMMET (41.28MM OD)	

106-8484 BATTERY & WIRING GP *(contd.)*

i01741330

NOTE	REF NO	GRAPHIC REF	PART NUMBER	QTY	PART NAME 1 2 3 4 5 6 (PRODUCT LEVEL)	SEE PAGE
	31	4	**3K-0360**	1	SEAL-O-RING	
		4	**3E-9350**	1	SWITCH AS-TEMPERATURE (FILTER BYPASS)	
		4	**102-8802**	1	KIT-RECEPTACLE (2 PIN)	
					(INCLUDES WEDGE & RECEPTACLE AS)	
		4	**3E-3365**	1	WEDGE-RECEPTACLE LOCK (2 PIN)	
		4	**8T-8729**	2	PIN-CONNECTOR	
	32	2,3	**7G-1060**	4	STRAP AS-GROUND	
	33	2	**106-8490**	1	HARNESS AS (RH FENDER)	
	34	2	**106-8489**	1	HARNESS AS (LH FENDER)	
Y	35	4	**124-9325**	1	SENSOR GP-FUEL LEVEL (ULTRASONIC)	445
	36	4	**8T-2501**	4	BOLT (3/8-16X2 IN)	
	37	1	**6S-4039**	2	GROMMET	
	38	4	**5P-1075**	4	WASHER-HARD (10.2X22.5X3MM THK)	
	39	4	**7T-0266**	1	BRACKET AS	
		4	**1F-0750**	1	NUT-WELD (3/8-16 THD)	
	40	4	**8T-2502**	1	BOLT (3/8-16X1.125 IN)	
	41	4	**4L-6454**	5	BOLT (3/8-16X1 IN)	
	42	3	**2D-1290**	2	GROMMET	
	43	3	**6Y-6584**	1	STRAP AS-GROUND	
	44	3	**6V-8188**	3	NUT (1/2-13 THD)	
	45	2,3	**8T-4223**	5	WASHER-HARD (13.5X25.5X3MM THK)	
Y	46	4	**9X-7781**	1	SWITCH GP-BYPASS	497
Y	47	2	**118-7226**	1	SENSOR GP-TEMPERATURE (BRAKE OIL)	469
	48	4	**8N-1825**	1	RECEPTACLE AS	
		4	**1S-4915**	2	LINER-CONDUIT	
		4	**1S-7251**	2	TERMINAL-RING (FOR 1/2 IN BOLT)	
E		4	**5P-0695**		CONDUIT (127CM)	
E		4	**5P-0747**		CABLE (00GA)(BLACK) (156CM)	
E		4	**5P-0761**		CABLE (00GA)(RED) (153CM)	
BE		4	**8T-2225**		TUBE-HEAT SHRINK	
	49	4	**8S-4211**	2	PLATE	
Y	50	4	**7N-0719**	1	SWITCH GP-DISCONNECT (BATTERY)	499
	51	3	**9W-2938**	1	COVER AS	
		3	**4D-6716**	3	RIVET-POP	
Y	52	3	*9W-0742*	1	JUNCTION BLOCK GP	413
	53	3	**5C-6565**	2	BOLT (1/2-13X1.125 IN)	
	54	2	**8V-0622**	1	CABLE AS	
		2	**1M-6120**	2	NUT-BATTERY TERMINAL (5/16-18 THD)	
		2	**1M-6119**	2	BOLT-BATTERY TERMINAL (5/16-18X1.375 IN)	
		2	**8C-5917**	1	TERMINAL AS-BATTERY (POSITIVE)	
		2	**8T-9757**	1	TERMINAL AS-BATTERY (NEGATIVE)	
		2	**9G-0003**	1	COVER-TERMINAL (BLACK)	
		2	**9G-0004**	1	COVER-TERMINAL (RED)	
E		2	**5P-0761**		CABLE (00GA)(RED) (14CM)	
	55	2	**3E-8848**	1	SENSOR GP-SPEED (ODOMETER)	
		2	**7J-0204**	1	SEAL-O-RING	
	56	2	**4P-7582**	1	CLIP	
	57	3	**7G-0535**	1	CABLE AS	
		3	**1S-4915**	2	LINER-CONDUIT	
		3	**1S-7252**	1	TERMINAL-RING (FOR 3/8 IN BOLT)	
E		3	**8T-2225**		TUBE-HEAT SHRINK (23CM)	
		3	**9G-8909**	1	COVER-TERMINAL (BLACK)	
E		3	**5P-0695**		CONDUIT (110CM)	
E		3	**5P-0747**		CABLE (00GA)(BLACK) (150CM)	
	58	3	**1M-6119**	1	BOLT-BATTERY TERMINAL (5/16-18X1.375 IN)	
		3	**1M-6120**	1	NUT-BATTERY TERMINAL (5/16-18 THD)	
		3	**3S-2093**	1	STRAP-CABLE	
		3	**7N-5274**	1	COVER-TERMINAL (BLACK)	
	59	3	**5T-4502**	1	CABLE AS	

106-8484 BATTERY & WIRING GP *(contd.)*

i01741330

NOTE	REF NO	GRAPHIC REF	PART NUMBER	QTY	PART NAME 1 2 3 4 5 6 (PRODUCT LEVEL)	SEE PAGE
E		3	**5P-0747**		CABLE (00GA)(BLACK) (115CM)	
		3	**1S-7252**	3	TERMINAL-RING (FOR 3/8 IN BOLT)	
		3	**9G-8909**	3	COVER-TERMINAL (BLACK)	
		3	**1S-7251**	1	TERMINAL-RING (FOR 1/2 IN BOLT)	
	60	3	**4L-9337**	1	BOLT (3/8-16X1.5 IN)	
	61	3	**9W-1991**	1	SPACER (13.94X17.14X40MM THK)	
	62	3	**7T-7777**	1	CABLE AS	
E		3	**5P-0695**		CONDUIT (86CM)	
E		3	**5P-0761**		CABLE (00GA)(RED) (109CM)	
E		3	**8T-2225**		TUBE-HEAT SHRINK (16CM)	
		3	**1S-4915**	2	LINER-CONDUIT	
		3	**1S-7251**	2	TERMINAL-RING (FOR 1/2 IN BOLT)	
		3	**8N-0869**	2	COVER-TERMINAL (RED)	
	63	1	**8C-6561**	4	BOLT (5/16-18X1.375 IN)	
		1	**8T-4224**	4	WASHER-HARD (8.8X16X2MM THK)	
	64	2	**8T-4122**	1	WASHER-HARD (17X32X3.5MM THK)	
	65	2	**3D-2824**	1	SEAL-O-RING	
	66	2	**8T-0151**	1	ADAPTER	
	67	2	**7X-0342**	1	BOLT (5/8-11X0.74 IN)	
	68	3	**061-7278**	1	CABLE AS	
E		3	**5P-0747**		CABLE (00GA)(BLACK) (53CM)	
		3	**1S-7251**	2	TERMINAL-RING (FOR 1/2 IN BOLT)	
	69	3	**5P-9212**	1	PLUG	
	70	4	**111-4402**	1	FILTER-FOAM	
	71	4	**3E-7753**	1	FLOAT AS	
	72	4	**6V-5051**	1	SEAL-O-RING	
	73	2	**7B-1251**	4	GROMMET	
	74	2	**8T-8908**	1	BOLT (1/4-20X1 IN)	
	75	2	**8T-4205**	1	WASHER-HARD (7.2X14.5X2MM THK)	
	76	2	**3E-5239**	1	RELAY AS (24 VOLT)	
	77	3	**8S-2634**	1	COVER AS	
		3	**2P-2975**	2	SEAL-O-RING	

B-USE AS REQUIRED
E-ORDER BY THE CENTIMETER
M-METRIC PART
Y-SEPARATE ILLUSTRATION

106-8484 **BATTERY & WIRING GP** ***(contd.)*** **i01741330**

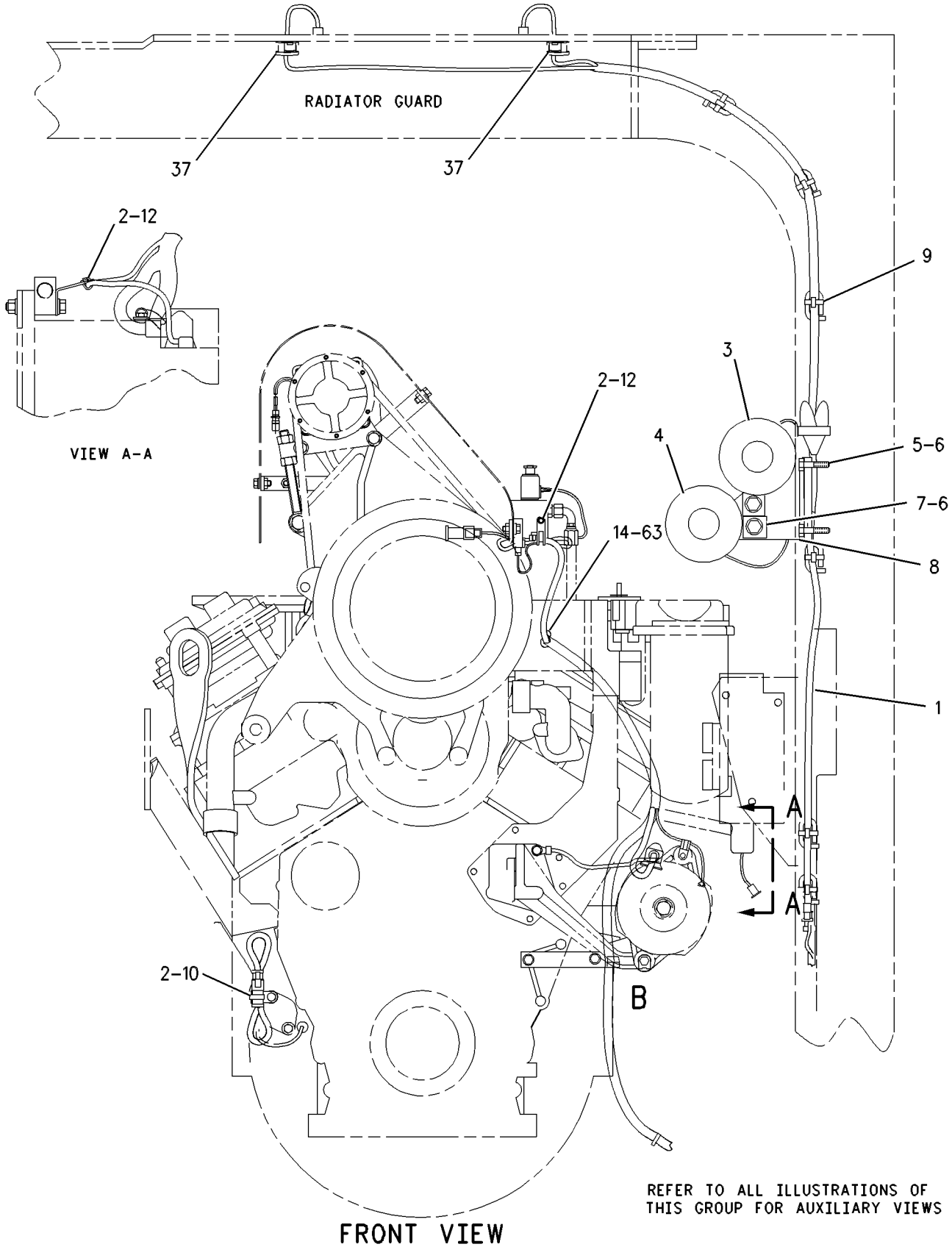

GRAPHIC #1 g00379614

106-8484 **BATTERY & WIRING GP** *(contd.)* **i01741330**

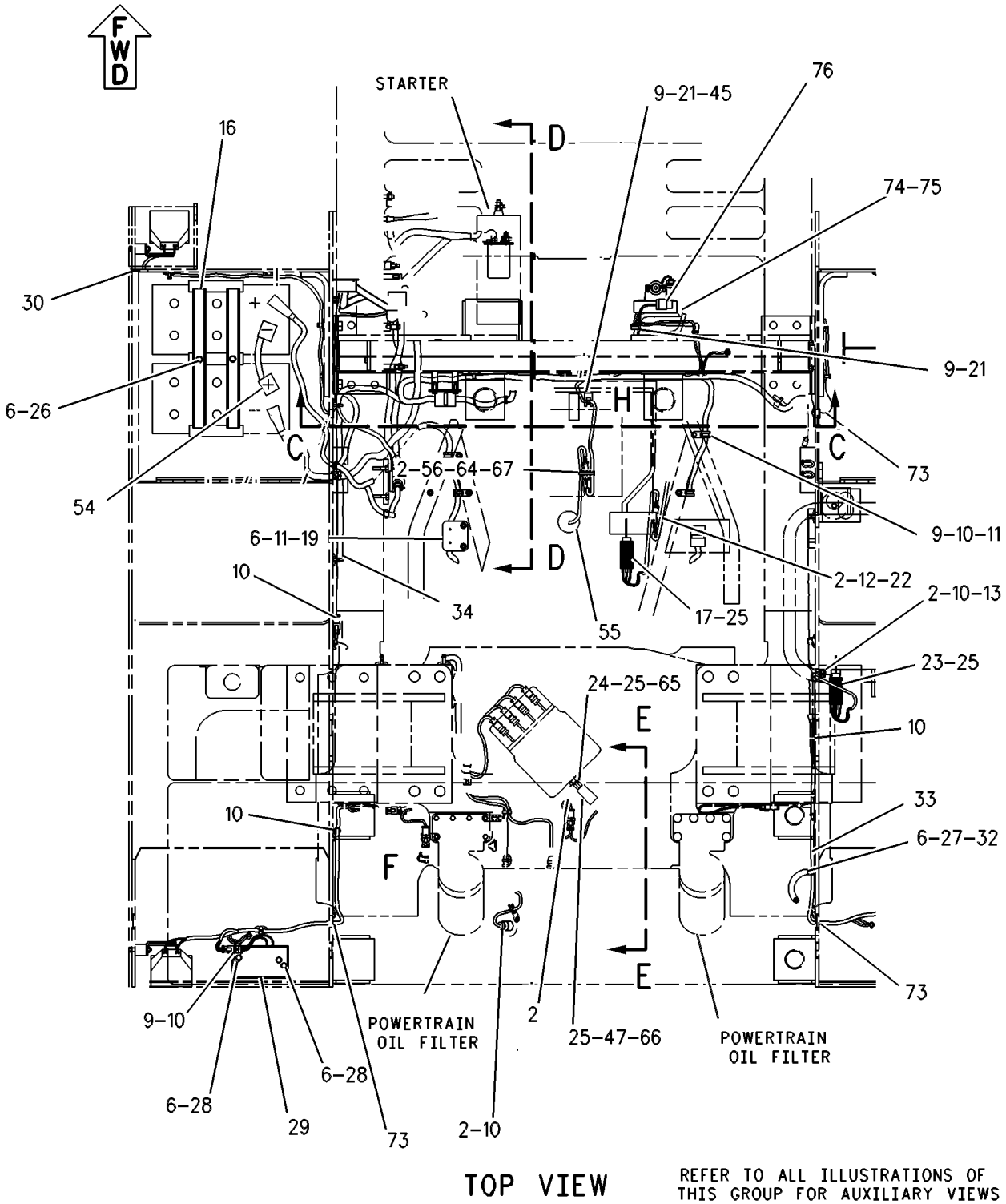

GRAPHIC #2 g00379615

106-8484 **BATTERY & WIRING GP** *(contd.)* **i01741330**

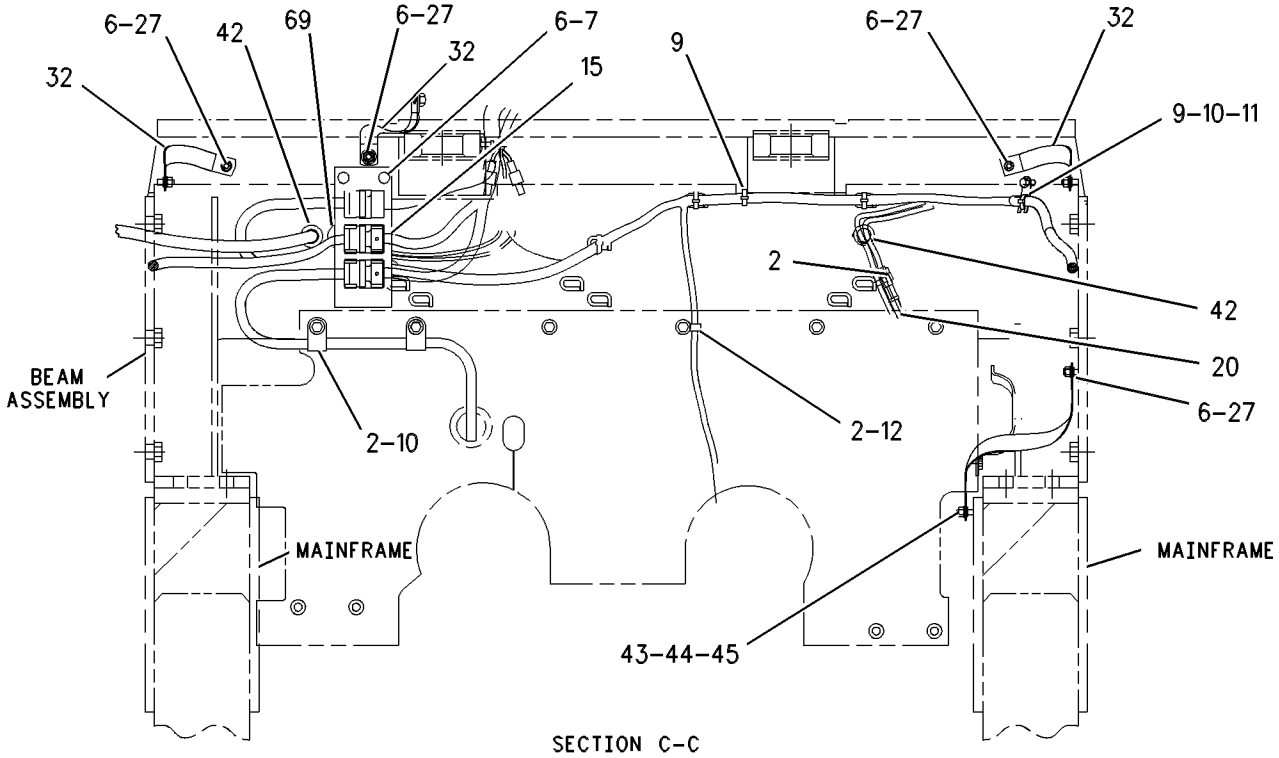

SECTION C-C

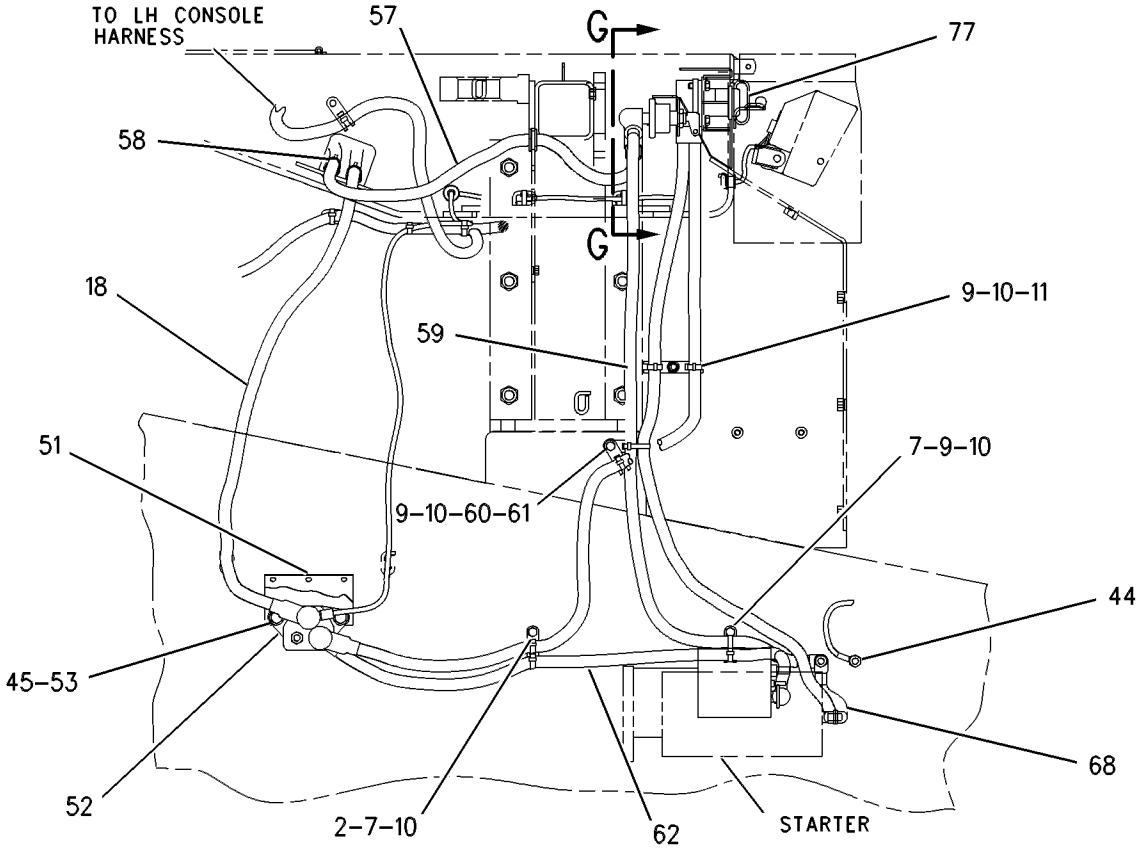

SECTION D-D

REFER TO ALL ILLUSTRATIONS OF THIS GROUP FOR AUXILIARY VIEWS

GRAPHIC #3 g00379612

106-8484 **BATTERY & WIRING GP** *(contd.)* **i01741330**

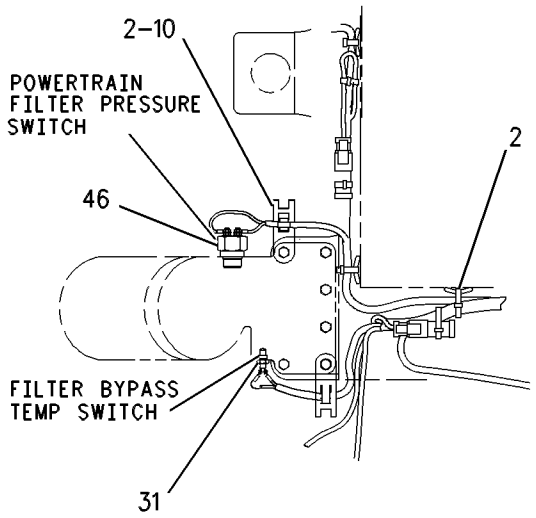

VIEW OF AREA F

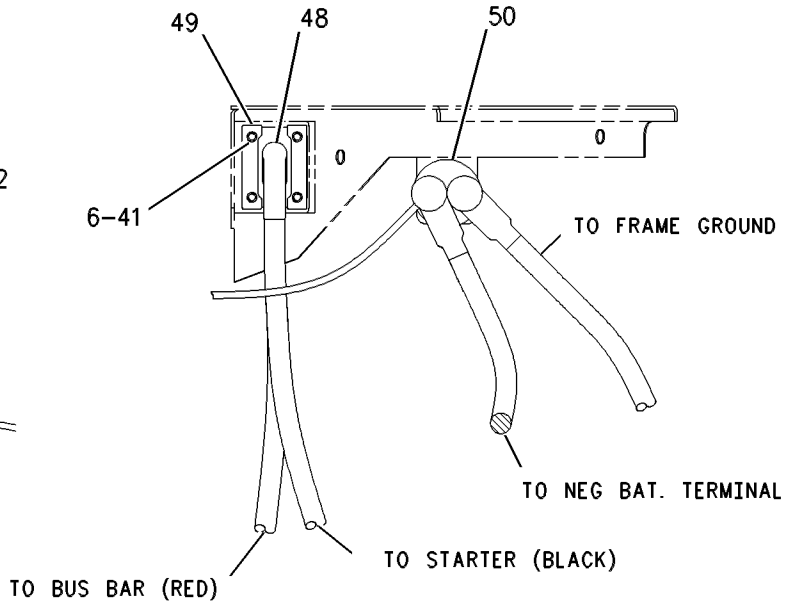

VIEW G-G

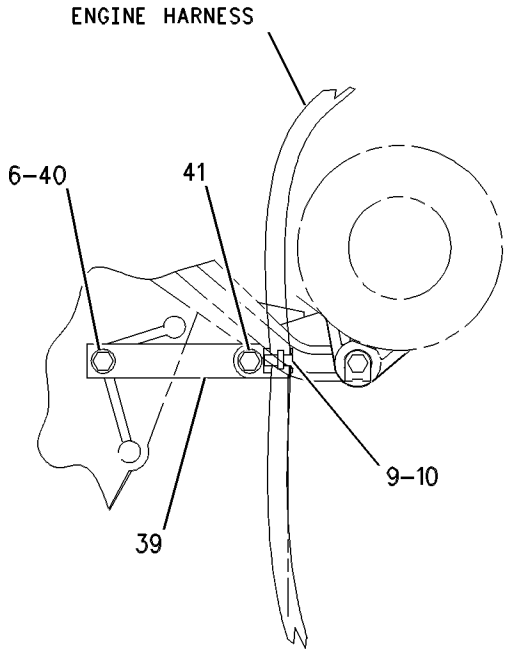

VIEW OF AREA B

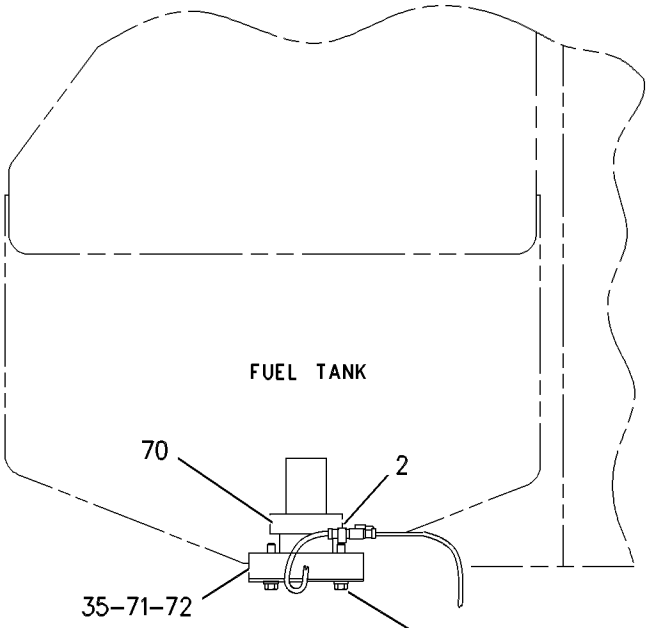

SECTION E-E

GRAPHIC #4 g00379613

MEMORANDA

ELECTRICAL AND STARTING SYSTEM

106-8484 BATTERY & WIRING GP

S/N: 3KR580-884

SMCS-1401, 1402, 1408 **i01741331**

NOTE	REF NO	GRAPHIC REF	PART NUMBER	QTY	PART NAME 1 2 3 4 5 6 (PRODUCT LEVEL)	SEE PAGE
	1	1	**106-8485**	1	HARNESS AS-RADIATOR	
	2	1	**7K-1181**	4	STRAP-CABLE	
	3	1	**7T-0970**	1	HORN AS (24 VOLT)(HIGH TONE)	
M		1	**8C-7581**	2	SCREW-MACHINE (M4X0.7X8MM)	
		1	**9B-7233**	2	LOCKWASHER	
	4	1	**7T-0969**	1	HORN AS (24 VOLT)(LOW TONE)	
M		1	**8C-7581**	2	SCREW-MACHINE (M4X0.7X8MM)	
		1	**9B-7233**	2	LOCKWASHER	
	5	1	**8T-4896**	3	WASHER-HARD (10.2X18.5X2.5MM THK)	
	6	1	**5S-7379**	2	BOLT (3/8-16X0.875 IN)	
C	7	1	**9X-6772**	16	STRAP-CABLE	
	8	1	**4P-7581**	3	CLIP	
	9	1	**4L-6454**	1	BOLT (3/8-16X1 IN)	
	10	1	**4P-8134**	2	CLIP	
	11	1	**7T-0266**	1	BRACKET AS	
		1	**1F-0750**	1	NUT-WELD (3/8-16 THD)	
	12	1	**8T-2502**	1	BOLT (3/8-16X1.125 IN)	
	13	1	**106-8491**	1	HARNESS AS-ENGINE	
	14	2	**123-6449**	1	WARNING GP-BACKUP	
		2	**3E-3365**	1	WEDGE-RECEPTACLE LOCK (2 PIN)	
		2	**8T-8729**	2	PIN-CONNECTOR	
		2	**102-8802**	1	KIT-RECEPTACLE (2 PIN)	
					(INCLUDES RECEPTACLE AS & WEDGE)	
	15	2	**7K-1181**	19	STRAP-CABLE	
	16	2	**7X-0291**	2	BOLT (3/8-16X3.75 IN)	
	17	2	**6V-8801**	4	NUT (3/8-16 THD)	
	18	2	**8T-4896**	8	WASHER-HARD (10.2X18.5X2.5MM THK)	
	19	2	**3K-6060**	2	LOCKNUT (3/8-16 THD)	
BC	20	2	**9X-6772**	9	STRAP-CABLE	
	21	2	**4P-7581**	7	CLIP	
	22	2	**5M-3062**	6	BOLT (3/8-16X0.75 IN)	
	23	2	**4P-8134**	1	CLIP	
	24	2	**8V-0622**	1	CABLE AS	
		2	**1M-6119**	2	BOLT-BATTERY TERMINAL (5/16-18X1.375 IN)	
		2	**1M-6120**	2	NUT-BATTERY TERMINAL (5/16-18 THD)	
E		2	**5P-0761**		CABLE (00GA)(RED) (14CM)	
		2	**8C-5917**	1	TERMINAL AS-BATTERY (POSITIVE)	
		2	**8T-9757**	1	TERMINAL AS-BATTERY (NEGATIVE)	
		2	**9G-0003**	1	COVER-TERMINAL (BLACK)	
		2	**9G-0004**	1	COVER-TERMINAL (RED)	
	25	2	**4P-7582**	1	CLIP	
	26	2	**7X-0342**	1	BOLT (5/8-11X0.74 IN)	
	27	2	**8E-4260**	1	HOLD-DOWN AS	
	28	2	**9X-9730**	2	BATTERY (12 VOLT)	
					(EACH INCLUDES)	
		1	**7N-0060**	6	VENT AS	
	29	2	**3D-2824**	1	SEAL-O-RING	
	30	2	**118-6365**	1	PLATE AS	
		2	**6V-6716**	2	RIVET-TRUSS HEAD	
		2	**109-1645**	1	CLIP	
	31	2	**8T-0151**	1	ADAPTER	
	32	2	**4P-7429**	2	CLIP	
	33	2	**1A-2029**	1	BOLT (3/8-16X1.125 IN)	
CY	34	2	**118-7226**	1	SENSOR GP-TEMPERATURE (BRAKE OIL)	469
	35	2	**2P-8421**	1	ADAPTER-O-RING	
	36	2	**3J-1907**	3	SEAL-O-RING	
	37	2	**3E-8848**	1	SENSOR GP-SPEED (ODOMETER)	

106-8484 BATTERY & WIRING GP *(contd.)* i01741331

NOTE	REF NO	GRAPHIC REF	PART NUMBER	QTY	PART NAME 1 2 3 4 5 6 (PRODUCT LEVEL)	SEE PAGE
	38	2	**8T-4122**	1	WASHER-HARD (17X32X3.5MM THK)	
	39	2	**7B-1251**	2	GROMMET	
	40	2	**8T-4223**	2	WASHER-HARD (13.5X25.5X3MM THK)	
	41	2	**7G-1060**	1	STRAP AS-GROUND	
CY	42	2	**118-7226**	1	SENSOR GP-TEMPERATURE (POWERTRAIN OIL)	469
	43	3	**7B-1251**	4	GROMMET	
	44	3	**106-8490**	1	HARNESS AS (RH FENDER)	
	45	3	**9X-6772**	42	STRAP-CABLE	
	46	3	**106-8489**	1	HARNESS AS (LH FENDER)	
	47	3	**6S-4039**	2	GROMMET	
	48	3	**3E-5239**	1	RELAY AS (24 VOLT)	
	49	3	**8T-8908**	1	BOLT (1/4-20X1 IN)	
		3	**8T-4205**	1	WASHER-HARD (7.2X14.5X2MM THK)	
	50	3	**111-4402**	1	FILTER-FOAM	
	51	3	**8T-2501**	4	BOLT (3/8-16X2 IN)	
	52	3	**5P-1075**	4	WASHER-HARD (10.2X22.5X3MM THK)	
Y	53	3	**124-9325**	1	SENSOR GP-FUEL LEVEL (ULTRASONIC)	445
	54	3	**3E-7753**	1	FLOAT AS	
	55	3	**6V-5051**	1	SEAL-O-RING	
	56	3	**7K-1181**	1	STRAP-CABLE	
	57	3	**4P-7429**	1	CLIP	
	58	4	**6V-8801**	7	NUT (3/8-16 THD)	
	59	4	**8T-4896**	10	WASHER-HARD (10.2X18.5X2.5MM THK)	
	60	4	**7G-1060**	3	STRAP AS-GROUND	
	61	4	**2D-1290**	2	GROMMET	
	62	4	**5P-9212**	1	PLUG	
	63	4	**5S-7379**	2	BOLT (3/8-16X0.875 IN)	
C	64	4	**9X-6772**	13	STRAP-CABLE	
	65	4	**4P-7581**	5	CLIP	
C	66	4	**5M-3062**	2	BOLT (3/8-16X0.75 IN)	
C	67	4	**4P-8134**	2	CLIP	
	68	4	**7K-1181**	8	STRAP-CABLE	
	69	4	**113-4316**	1	PLATE AS	
		4	**6C-3680**	6	RIVET-POP	
		4	**109-1645**	3	CLIP	
	70	4	**128-2976**	1	HARNESS AS (ETHER AID)	
	71	4	**8T-4223**	1	WASHER-HARD (13.5X25.5X3MM THK)	
	72	4	**6V-8188**	1	NUT (1/2-13 THD)	
	73	4	**6Y-6584**	1	STRAP AS-GROUND	
C	74	4	**4P-7429**	2	CLIP	
C	75	4	**4P-7428**	1	CLIP	
Y	76	5	**9X-7781**	1	SWITCH GP-BYPASS	497
	77	5	**7K-1181**	17	STRAP-CABLE	
	78	5	**2S-4078**	1	SEAL-O-RING	
	79	5	**3T-9549**	1	ADAPTER	
	80	5	**8T-4896**	6	WASHER-HARD (10.2X18.5X2.5MM THK)	
	81	5	**5S-7379**	2	BOLT (3/8-16X0.875 IN)	
C	82	5	**9X-6772**	17	STRAP-CABLE	
	83	5	**4P-7581**	16	CLIP	
C	84	5	**5M-3062**	3	BOLT (3/8-16X0.75 IN)	
C	85	5	**4P-8134**	7	CLIP	
	86	5	**5P-8167**	1	BOLT (3/8-16X0.625 IN)	
	87	5	**3K-0360**	1	SEAL-O-RING	
	88	5	**3E-9350**	1	SWITCH AS-TEMPERATURE (FILTER BYPASS)	
	89	5	**061-7278**	1	CABLE AS	
E		5	**5P-0747**		CABLE (00GA)(BLACK) (53CM)	
		5	**1S-7251**	2	TERMINAL-RING (FOR 1/2 IN BOLT)	
	90	5	**8S-4211**	2	PLATE	
	91	5	**8N-1825**	1	RECEPTACLE AS	

106-8484 BATTERY & WIRING GP *(contd.)*

i01741331

NOTE	REF NO	GRAPHIC REF	PART NUMBER	QTY	PART NAME 1 2 3 4 5 6 (PRODUCT LEVEL)	SEE PAGE
		5	**1S-4915**	2	LINER-CONDUIT	
		5	**1S-7251**	2	TERMINAL-RING (FOR 1/2 IN BOLT)	
E		5	**5P-0695**		CONDUIT (127CM)	
E		5	**5P-0747**		CABLE (00GA)(BLACK) (153CM)	
E		5	**5P-0761**		CABLE (00GA)(RED) (153CM)	
E		5	**8T-2225**		TUBE-HEAT SHRINK (16CM)	
Y	92	5	**7N-0719**	1	SWITCH GP-DISCONNECT (BATTERY)	499
	93	5	**4L-6454**	4	BOLT (3/8-16X1 IN)	
C	94	5	**4P-7429**	1	CLIP	
C	95	5	**4P-7428**	1	CLIP	
	96	5	**7T-9982**	1	CABLE AS	
	97	5	**9W-2938**	1	COVER AS	
		5	**4D-6716**	3	RIVET-POP	
	98	5	**8T-4223**	2	WASHER-HARD (13.5X25.5X3MM THK)	
	99	5	**5C-6565**	2	BOLT (1/2-13X1.125 IN)	
Y	100	5	*9W-0742*	1	JUNCTION BLOCK GP	413
	101	5	**7T-7777**	1	CABLE AS	
	102	5	**6V-8188**	2	NUT (1/2-13 THD)	
	103	5	**4L-9337**	1	BOLT (3/8-16X1.5 IN)	
C	104	5	**9G-8661**	1	SPACER (10X16X20MM THK)	
	105	5	**5T-4502**	1	CABLE AS	
		5	**1S-7251**	1	TERMINAL-RING (FOR 1/2 IN BOLT)	
		5	**1S-7252**	1	TERMINAL-RING (FOR 3/8 IN BOLT)	
E		5	**5P-0747**		CABLE (00GA)(BLACK) (115CM)	
		5	**9G-8909**	1	COVER-TERMINAL (BLACK)	
Y	106	5	**118-7226**	1	SENSOR GP-TEMPERATURE (HYDRAULIC OIL)	469
	107	5	**3J-1907**	1	SEAL-O-RING	
	108	5	**8S-2634**	1	COVER AS	
		5	**2P-2975**	2	SEAL-O-RING	
	109	5	**1S-4915**	2	LINER-CONDUIT	
		5	**1S-7252**	1	TERMINAL-RING (FOR 3/8 IN BOLT)	
		5	**3S-2093**	1	STRAP-CABLE	
E		5	**5P-0695**		CONDUIT (110CM)	
E		5	**5P-0747**		CABLE (00GA)(BLACK) (150CM)	
		5	**7N-5274**	1	COVER-TERMINAL (BLACK)	
BE		5	**8T-2225**		TUBE-HEAT SHRINK	
		5	**9G-8909**	1	COVER-TERMINAL (BLACK)	
		5	**3S-6050**	1	TERMINAL AS-BATTERY (NEGATIVE)	
		5	**1M-6119**	1	BOLT-BATTERY TERMINAL (5/16-18X1.375 IN)	
		5	**1M-6120**	1	NUT-BATTERY TERMINAL (5/16-18 THD)	
		5	**9W-3459**	1	TERMINAL AS-BATTERY	

B-USE AS REQUIRED
C-CHANGE FROM PREVIOUS TYPE
E-ORDER BY THE CENTIMETER
M-METRIC PART
Y-SEPARATE ILLUSTRATION

106-8484 **BATTERY & WIRING GP** ***(contd.)*** **i01741331**

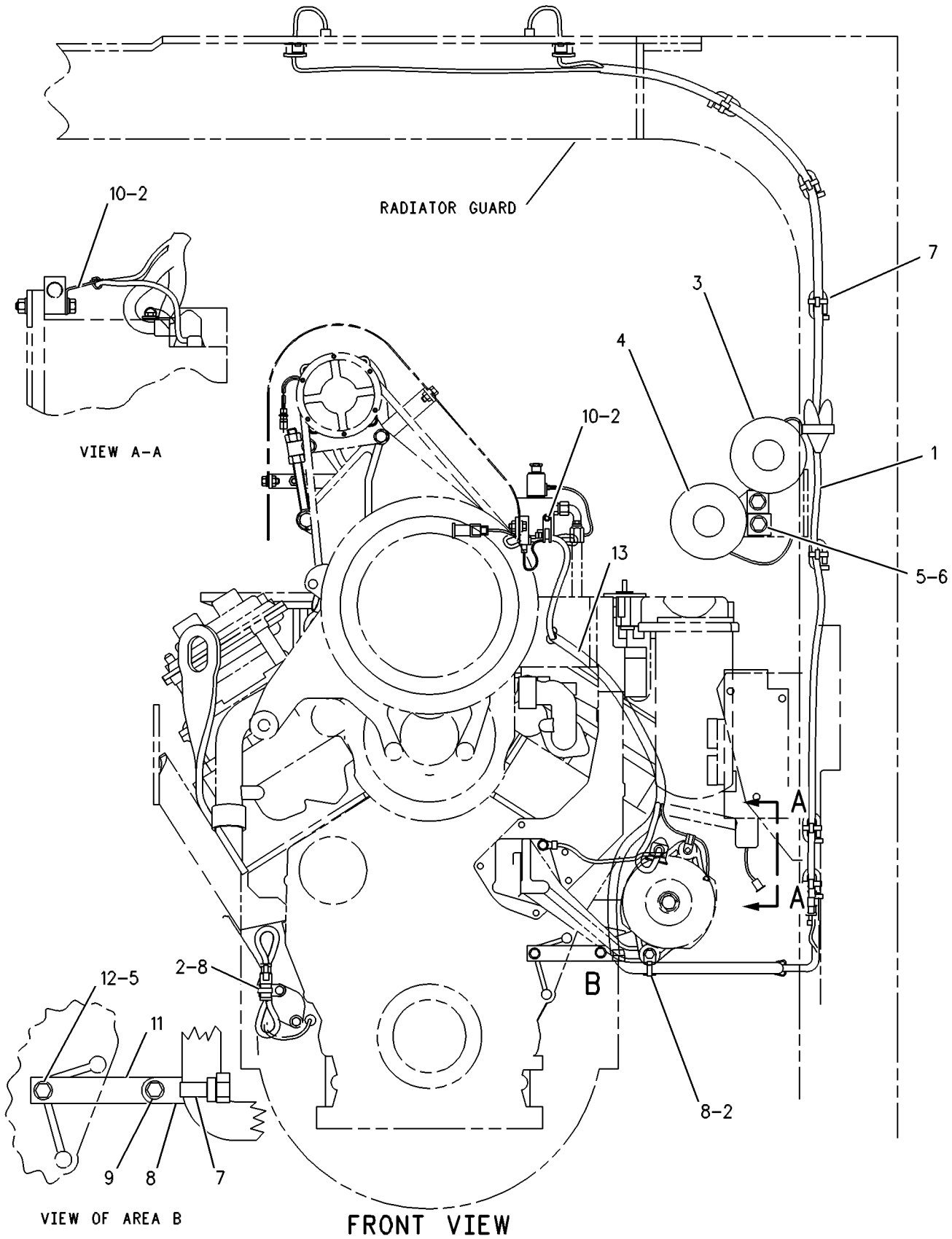

GRAPHIC #1 g00379330

106-8484 **BATTERY & WIRING GP** *(contd.)* **i01741331**

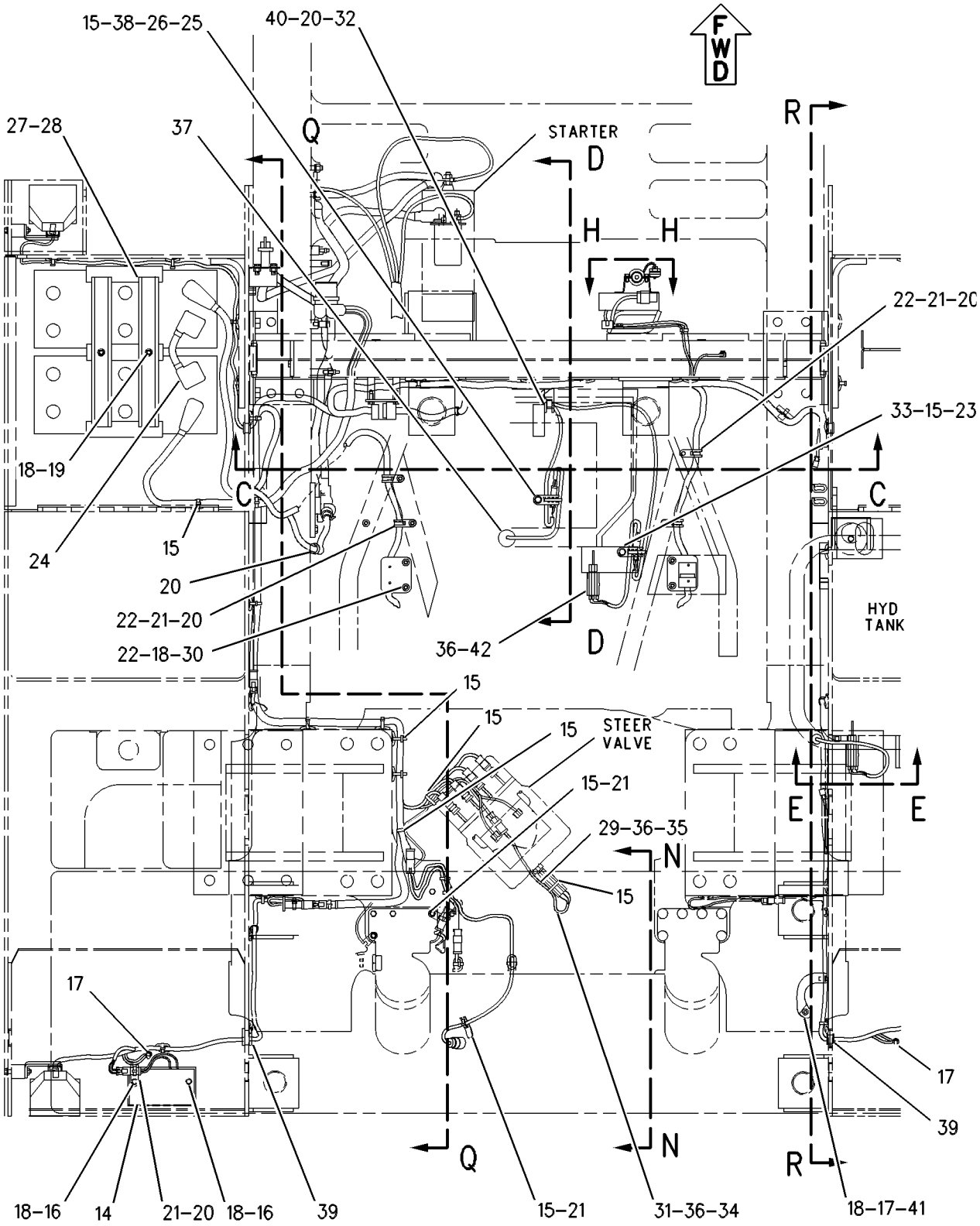

REFER TO ALL ILLUSTRATIONS OF THIS GROUP FOR AUXILIARY VIEWS

TOP VIEW

GRAPHIC #2 g00379992

106-8484 **BATTERY & WIRING GP** *(contd.)* **i01741331**

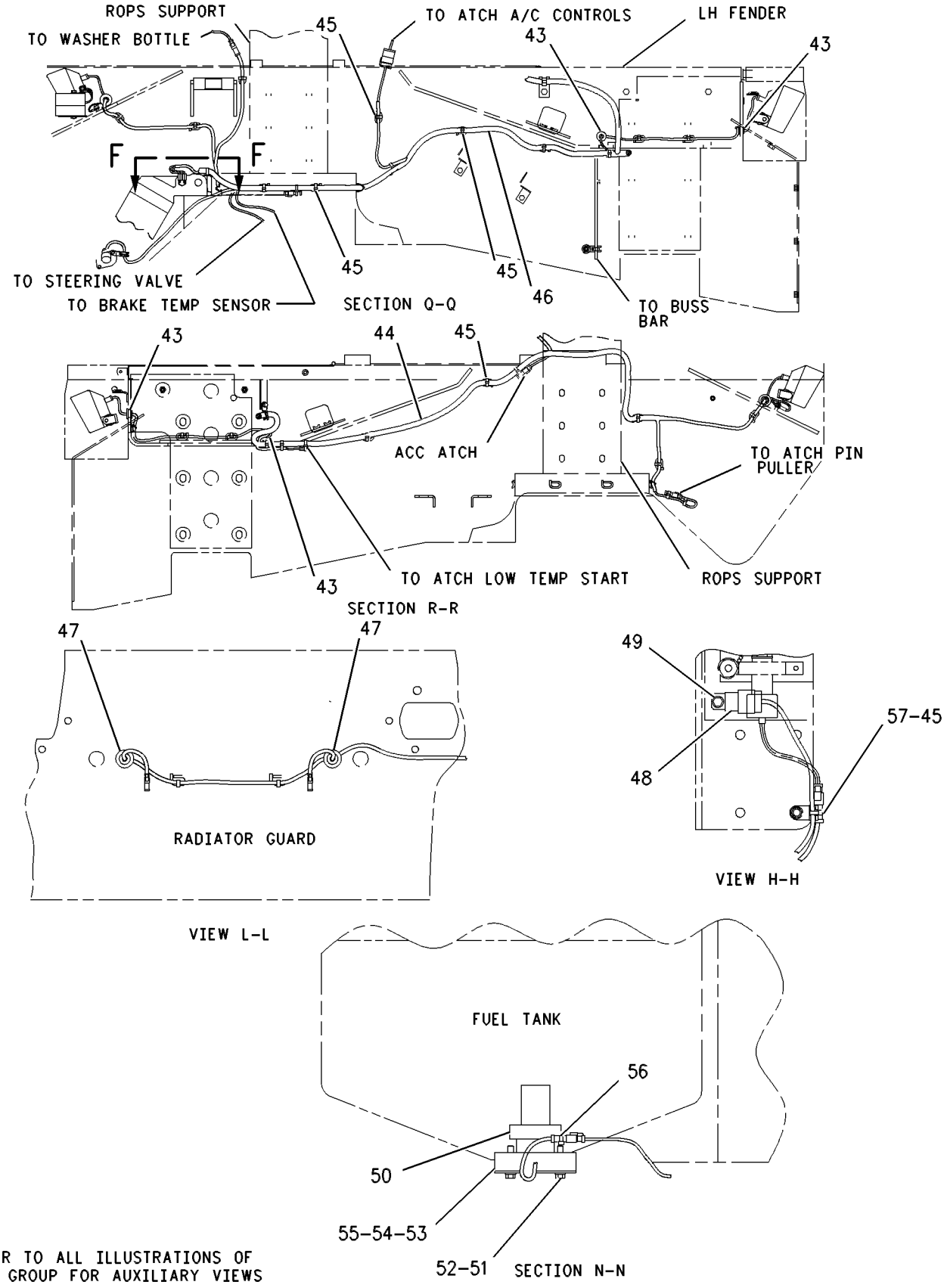

REFER TO ALL ILLUSTRATIONS OF THIS GROUP FOR AUXILIARY VIEWS

GRAPHIC #3 g00380012

106-8484 **BATTERY & WIRING GP** *(contd.)* **i01741331**

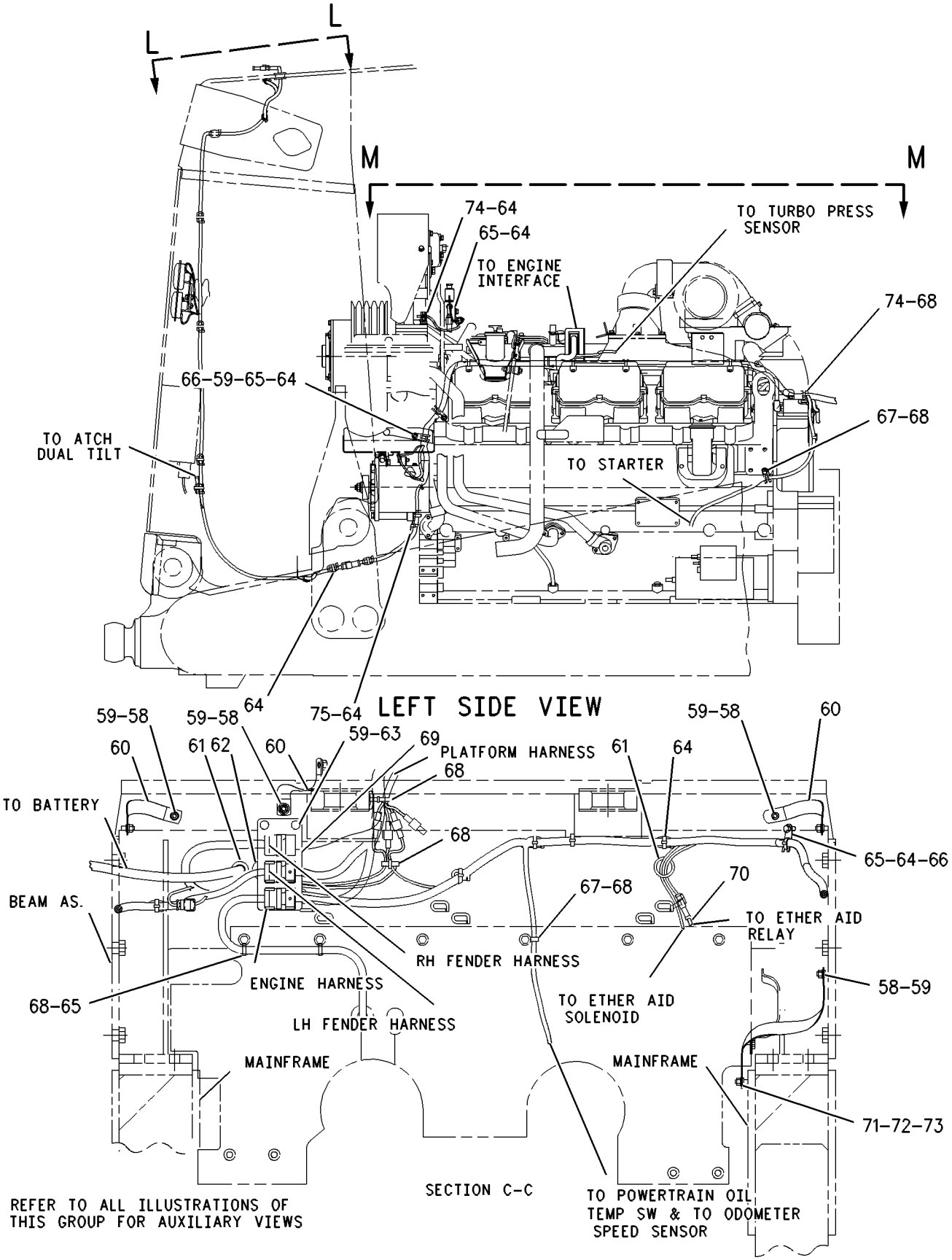

GRAPHIC #4 g00393264

106-8484 **BATTERY & WIRING GP** *(contd.)* **i01741331**

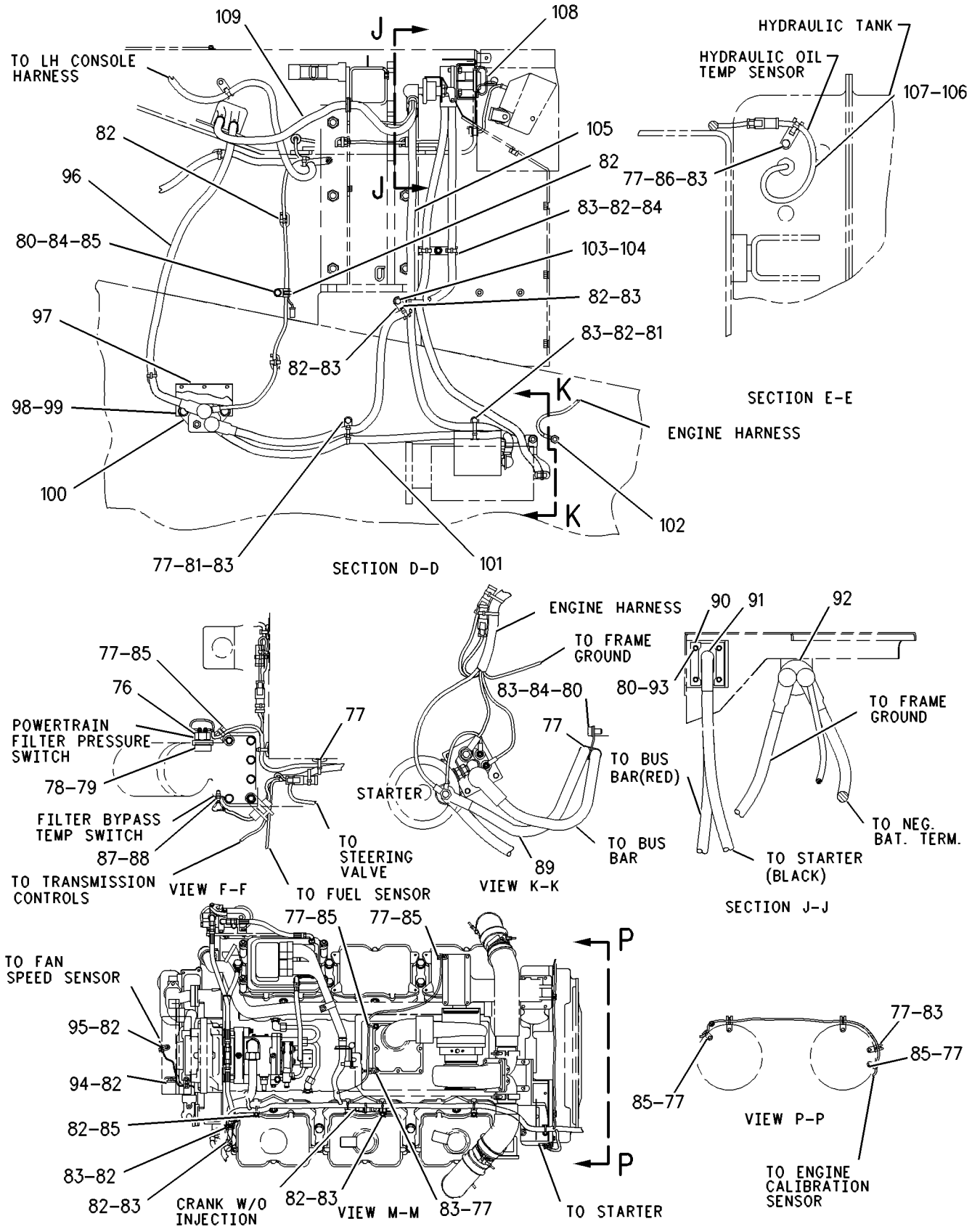

GRAPHIC #5 g00380014

ELECTRICAL AND STARTING SYSTEM

106-8484 BATTERY & WIRING GP

S/N: 3KR885-938

SMCS-1401, 1402, 1408 **i01741332**

NOTE	REF NO	GRAPHIC REF	PART NUMBER	QTY	PART NAME 1 2 3 4 5 6 (PRODUCT LEVEL)	SEE PAGE
	1	1	**106-8485**	1	HARNESS AS-RADIATOR	
	2	1,2,3, 4,5	**7K-1181**	48	STRAP-CABLE	
	3	1	**7T-0970**	1	HORN AS (24 VOLT)(HIGH TONE)	
	4	1	**7T-0969**	1	HORN AS (24 VOLT)(LOW TONE)	
					(EACH HORN AS. INCLUDES)	
		1	**9B-7233**	2	LOCKWASHER	
M		1	**8C-7581**	2	SCREW-MACHINE (M4X0.7X8MM)	
		1	**096-6166**	2	WASHER-HARD (4.5X9X1MM THK)	
	5	1,2,4,5	**8T-4896**	27	WASHER-HARD (10.2X18.5X2.5MM THK)	
	6	1,4,5	**5S-7379**	6	BOLT (3/8-16X0.875 IN)	
B	7	1,2,3, 4,5	**9X-6772**	97	STRAP-CABLE	
	8	1,2,4,5	**4P-7581**	31	CLIP	
	9	2,4,5	**5M-3062**	11	BOLT (3/8-16X0.75 IN)	
	10	1,2,4,5	**4P-8134**	12	CLIP	
	11	1	**5P-8167**	1	BOLT (3/8-16X0.625 IN)	
	12	1	**106-8491**	1	HARNESS AS-ENGINE	
	13	4	**113-4316**	1	PLATE AS	
		4	**6C-3680**	6	RIVET-POP	
	14	1,4	**109-1645**	3	CLIP	
	15	2	**9X-9730**	2	BATTERY (12 VOLT)	
					(EACH INCLUDES)	
		1	**7N-0060**	6	VENT AS	
	16	5	**7T-9982**	1	CABLE AS	
		5	**1M-6119**	1	BOLT-BATTERY TERMINAL (5/16-18X1.375 IN)	
		5	**1M-6120**	1	NUT-BATTERY TERMINAL (5/16-18 THD)	
		5	**1S-7251**	1	TERMINAL-RING (FOR 1/2 IN BOLT)	
		5	**8N-0869**	1	COVER-TERMINAL (RED)	
BE		5	**8T-2225**		TUBE-HEAT SHRINK	
E	17	5	**5P-0761**		CABLE (00GA)(RED) (160CM)	
E	18	5	**5P-0695**		CONDUIT (142CM)	
	19	5	**8N-1725**	1	COVER-TERMINAL (RED)	
	20	5	**1S-4915**	2	LINER-CONDUIT	
	21	2,5	**3S-2093**	1	STRAP-CABLE	
	22	2,5	**2P-8421**	1	ADAPTER-O-RING	
	23	1,2	**3J-1907**	4	SEAL-O-RING	
	24	2	**3K-6060**	2	LOCKNUT (3/8-16 THD)	
	25	2,4	**6V-8801**	11	NUT (3/8-16 THD)	
	26	2	**7X-0291**	2	BOLT (3/8-16X3.75 IN)	
	27	2	**123-6449**	1	WARNING GP-BACKUP	
		2	**3E-3365**	1	WEDGE-RECEPTACLE LOCK (2 PIN)	
		2	**8T-8729**	2	PIN-CONNECTOR	
		2	**102-8802**	1	KIT-RECEPTACLE (2 PIN)	
					(INCLUDES RECEPTACLE AS & WEDGE)	
Y	28	2	**118-7226**	1	SENSOR GP-TEMPERATURE (BRAKE OIL)	469
	29	5	**3K-0360**	1	SEAL-O-RING	
	30	2,4	**7G-1060**	4	STRAP AS-GROUND	
	31	3	**106-8490**	1	HARNESS AS (RH FENDER)	
	32	3	**106-8489**	1	HARNESS AS (LH FENDER)	
Y	33	3	**124-9325**	1	SENSOR GP-FUEL LEVEL (ULTRASONIC)	445
	34	3	**8T-2501**	4	BOLT (3/8-16X2 IN)	
	35	3	**6S-4039**	2	GROMMET	
	36	3	**5P-1075**	4	WASHER-HARD (10.2X22.5X3MM THK)	
	37	1	**7T-0266**	1	BRACKET AS	
		1	**1F-0750**	1	NUT-WELD (3/8-16 THD)	
	38	1	**8T-2502**	1	BOLT (3/8-16X1.125 IN)	

106-8484 BATTERY & WIRING GP *(contd.)* i01741332

NOTE	REF NO	GRAPHIC REF	PART NUMBER	QTY	PART NAME 1 2 3 4 5 6 (PRODUCT LEVEL)	SEE PAGE
	39	1,5	**4L-6454**	5	BOLT (3/8-16X1 IN)	
	40	4	**2D-1290**	2	GROMMET	
	41	4	**6Y-6584**	1	STRAP AS-GROUND	
	42	4,5	**6V-8188**	3	NUT (1/2-13 THD)	
	43	2,4,5	**8T-4223**	5	WASHER-HARD (13.5X25.5X3MM THK)	
Y	44	5	**9X-7781**	1	SWITCH GP-BYPASS (POWERTRAIN FILTER)	497
	45	5	**3E-9350**	1	SWITCH AS-TEMPERATURE (FILTER BYPASS)	
		5	**3E-3365**	1	WEDGE-RECEPTACLE LOCK (2 PIN)	
		5	**8T-8729**	2	PIN-CONNECTOR	
		5	**102-8802**	1	KIT-RECEPTACLE (2 PIN)	
					(INCLUDES RECEPTACLE AS & WEDGE)	
	46	5	**8N-1825**	1	RECEPTACLE AS	
	47	5	**1S-7251**	2	TERMINAL-RING (FOR 1/2 IN BOLT)	
E		5	**5P-0747**		CABLE (00GA)(BLACK) (156CM)	
E		5	**5P-0761**		CABLE (00GA)(RED) (153CM))	
		5	**1S-4915**	2	LINER-CONDUIT	
BE		5	**8T-2225**		TUBE-HEAT SHRINK	
E		5	**5P-0695**		CONDUIT (127CM)	
Y	48	5	**7N-0719**	1	SWITCH GP-DISCONNECT (BATTERY)	499
	49	5	**9W-2938**	1	COVER AS	
	50	5	**4D-6716**	3	RIVET-POP	
	51	5	**5C-6565**	2	BOLT (1/2-13X1.125 IN)	
	52	2	**8V-0622**	1	CABLE AS	
		2	**1M-6119**	2	BOLT-BATTERY TERMINAL (5/16-18X1.375 IN)	
		2	**1M-6120**	2	NUT-BATTERY TERMINAL (5/16-18 THD)	
E		2	**5P-0761**		CABLE (00GA)(RED) (14CM)	
		2	**9G-0003**	1	COVER-TERMINAL (BLACK)	
		2	**9G-0004**	1	COVER-TERMINAL (RED)	
	53	2	**3E-8848**	1	SENSOR GP-SPEED	
		2	**3E-3365**	1	WEDGE-RECEPTACLE LOCK (2 PIN)	
		2	**8T-8729**	2	PIN-CONNECTOR	
BE		2	**9X-1386**		SLEEVE	
		2	**102-8802**	1	KIT-RECEPTACLE (2 PIN)	
					(INCLUDES RECEPTACLE AS & WEDGE)	
	54	2	**4P-7582**	1	CLIP	
	55	5	**7G-0535**	1	CABLE AS	
		5	**1S-7252**	1	TERMINAL-RING (FOR 3/8 IN BOLT)	
E		5	**5P-0747**		CABLE (00GA)(BLACK) (150CM)	
		5	**1M-6119**	1	BOLT-BATTERY TERMINAL (5/16-18X1.375 IN)	
		5	**1M-6120**	1	NUT-BATTERY TERMINAL (5/16-18 THD)	
		5	**7N-5274**	1	COVER-TERMINAL (BLACK)	
		5	**9G-8909**	1	COVER-TERMINAL (BLACK)	
		5	**3S-2093**	1	STRAP-CABLE	
E		5	**5P-0695**		CONDUIT (110CM)	
E		5	**8T-2225**		TUBE-HEAT SHRINK (23CM)	
		5	**1S-4915**	2	LINER-CONDUIT	
	56	5	**8S-2634**	1	COVER AS	
		5	**2P-2975**	2	SEAL-O-RING	
	57	5	**5T-4502**	1	CABLE AS	
	58	5	**1S-7252**	1	TERMINAL-RING (FOR 3/8 IN BOLT)	
	59	5	**9G-8909**	1	COVER-TERMINAL (BLACK)	
E	60	5	**5P-0747**		CABLE (00GA)(BLACK) (115CM)	
	61	5	**1S-7251**	1	TERMINAL-RING (FOR 1/2 IN BOLT)	
	62	2	**8T-0151**	1	ADAPTER	
	63	2	**7X-0342**	1	BOLT (5/8-11X0.74 IN)	
	64	5	**061-7278**	1	CABLE AS	
	65	4	**5P-9212**	1	PLUG	
	66	3	**111-4402**	1	FILTER-FOAM	
	67	3	**3E-7753**	1	FLOAT AS	

106-8484 **BATTERY & WIRING GP** *(contd.)* **i01741332**

NOTE	REF NO	GRAPHIC REF	PART NUMBER	QTY	PART NAME 1 2 3 4 5 6 (PRODUCT LEVEL)	SEE PAGE
	68	3	**6V-5051**	1	SEAL-O-RING	
	69	2,3	**7B-1251**	6	GROMMET	
	70	3	**8T-8908**	1	BOLT (1/4-20X1 IN)	
	71	3	**8T-4205**	1	WASHER-HARD (7.2X14.5X2MM THK)	
	72	3	**3E-5239**	1	RELAY AS (24 VOLT)	
	73	2	**8T-4122**	1	WASHER-HARD (17X32X3.5MM THK)	
	74	4,5	**4P-7428**	2	CLIP	
	75	5	**3T-9549**	1	ADAPTER	
	76	5	**2S-4078**	1	SEAL-O-RING	
BD	77	2	**5P-1275**		LOCKWIRE	
	78	2	**8E-4260**	1	HOLD-DOWN AS	
	79	2	**118-6365**	1	PLATE AS	
		2	**6V-6716**	2	RIVET-TRUSS HEAD	
		2	**109-1645**	1	CLIP	
	80	4	**128-2976**	1	HARNESS AS (ETHER AID)	
	81	2,3,4,5	**4P-7429**	7	CLIP	
	82	2	**1A-2029**	1	BOLT (3/8-16X1.125 IN)	
CY	83	1	**134-2252**	2	SENSOR GP-TEMPERATURE (HYDRAULIC OIL)	470
	84	5	**8S-4211**	2	PLATE	
Y	85	5	*9W-0742*	1	JUNCTION BLOCK GP	413
	86	5	**4L-9337**	1	BOLT (3/8-16X1.5 IN)	
	87	5	**9G-8661**	1	SPACER (10X16X20MM THK)	
	88	5	**7T-7777**	1	CABLE AS	
		5	**1S-7251**	2	TERMINAL-RING (FOR 1/2 IN BOLT)	
		5	**8N-0869**	2	COVER-TERMINAL (RED)	
E		5	**5P-0695**		CONDUIT (86CM)	
		5	**1S-4915**	2	LINER-CONDUIT	
BE		5	**8T-2225**		TUBE-HEAT SHRINK	
	89	2	**3D-2824**	1	SEAL-O-RING	
CY	90	2	**134-2252**	1	SENSOR GP-TEMPERATURE (POWER TRAIN OIL)	470

B-USE AS REQUIRED
C-CHANGE FROM PREVIOUS TYPE
D-ORDER BY THE METER
E-ORDER BY THE CENTIMETER
M-METRIC PART
Y-SEPARATE ILLUSTRATION

106-8484 **BATTERY & WIRING GP** ***(contd.)*** **i01741332**

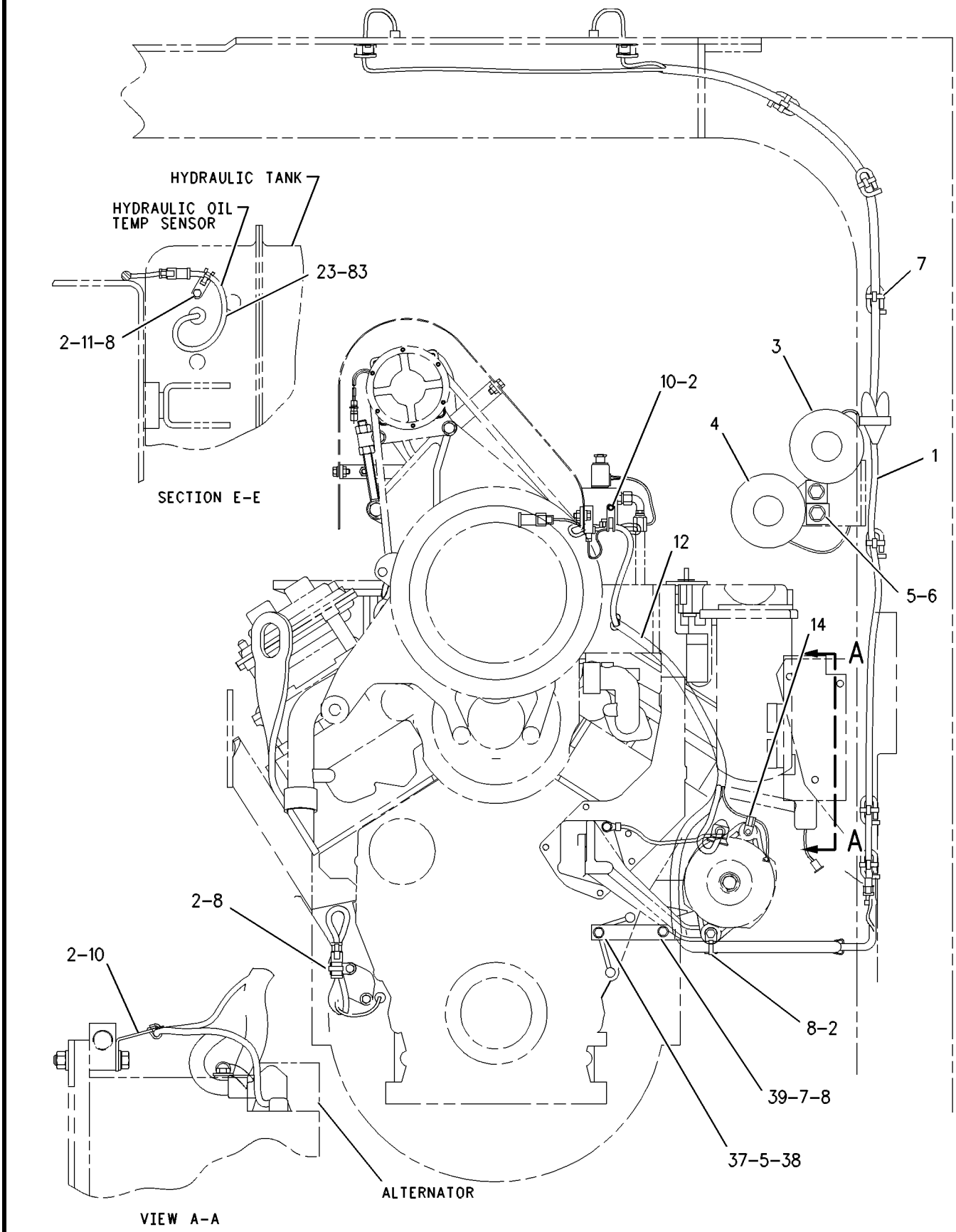

GRAPHIC #1 g00490721

106-8484 **BATTERY & WIRING GP** *(contd.)* **i01741332**

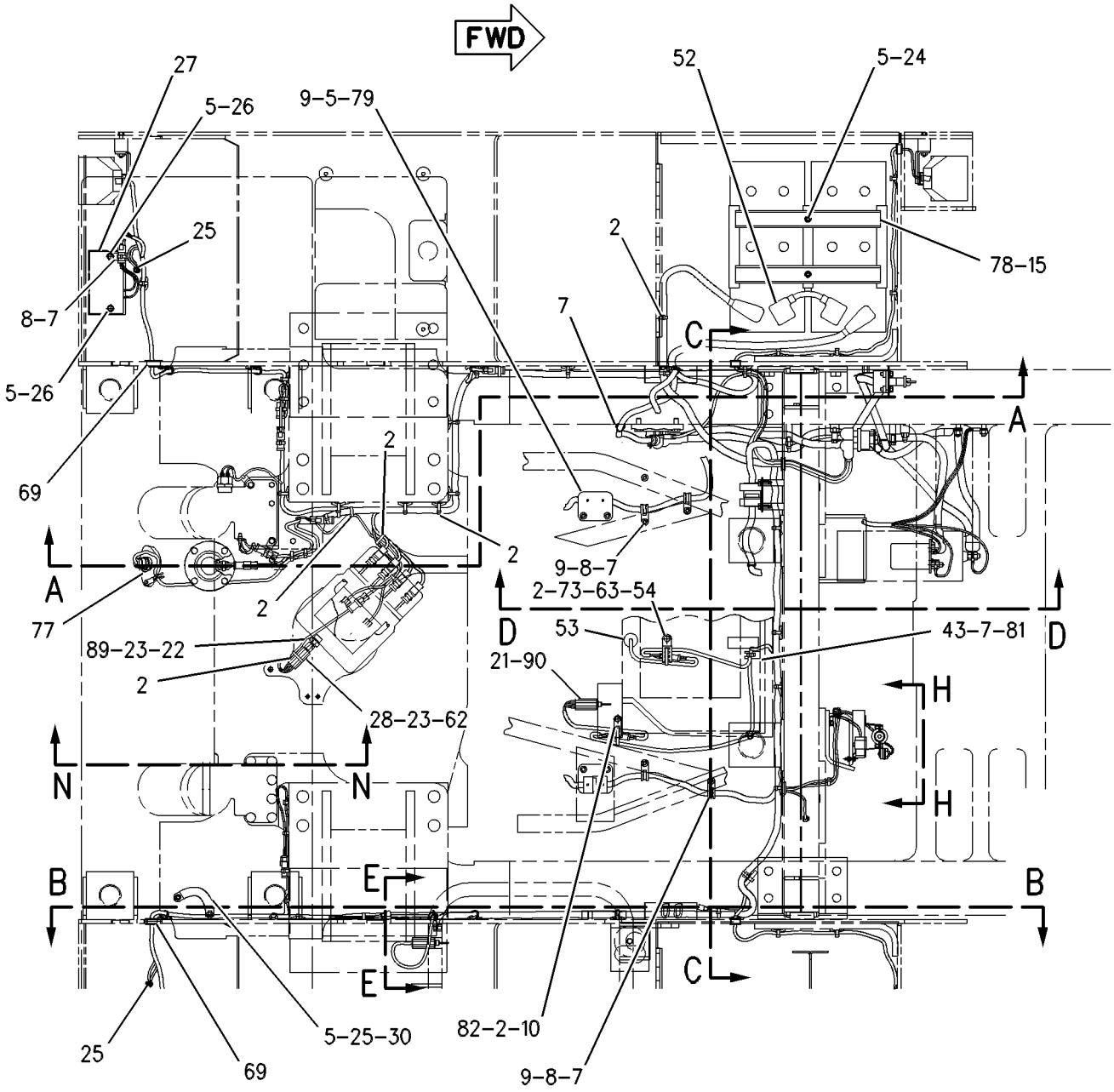

TOP VIEW

REFER TO ALL ILLUSTRATIONS OF
THIS GROUP FOR AUXILIARY VIEWS

GRAPHIC #2 g00490722

106-8484 **BATTERY & WIRING GP** ***(contd.)*** **i01741332**

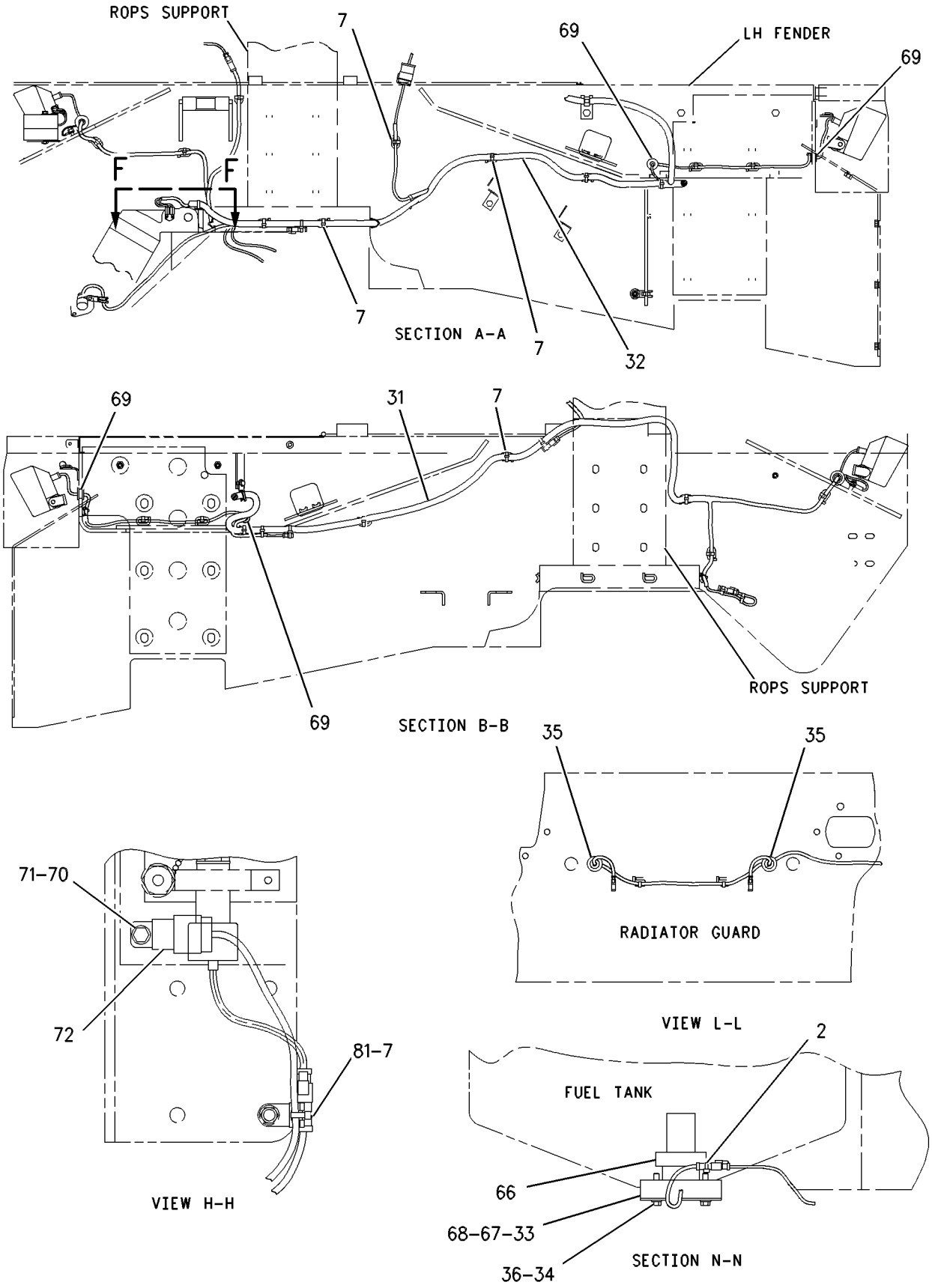

GRAPHIC #3 g00490723

106-8484 **BATTERY & WIRING GP** *(contd.)* **i01741332**

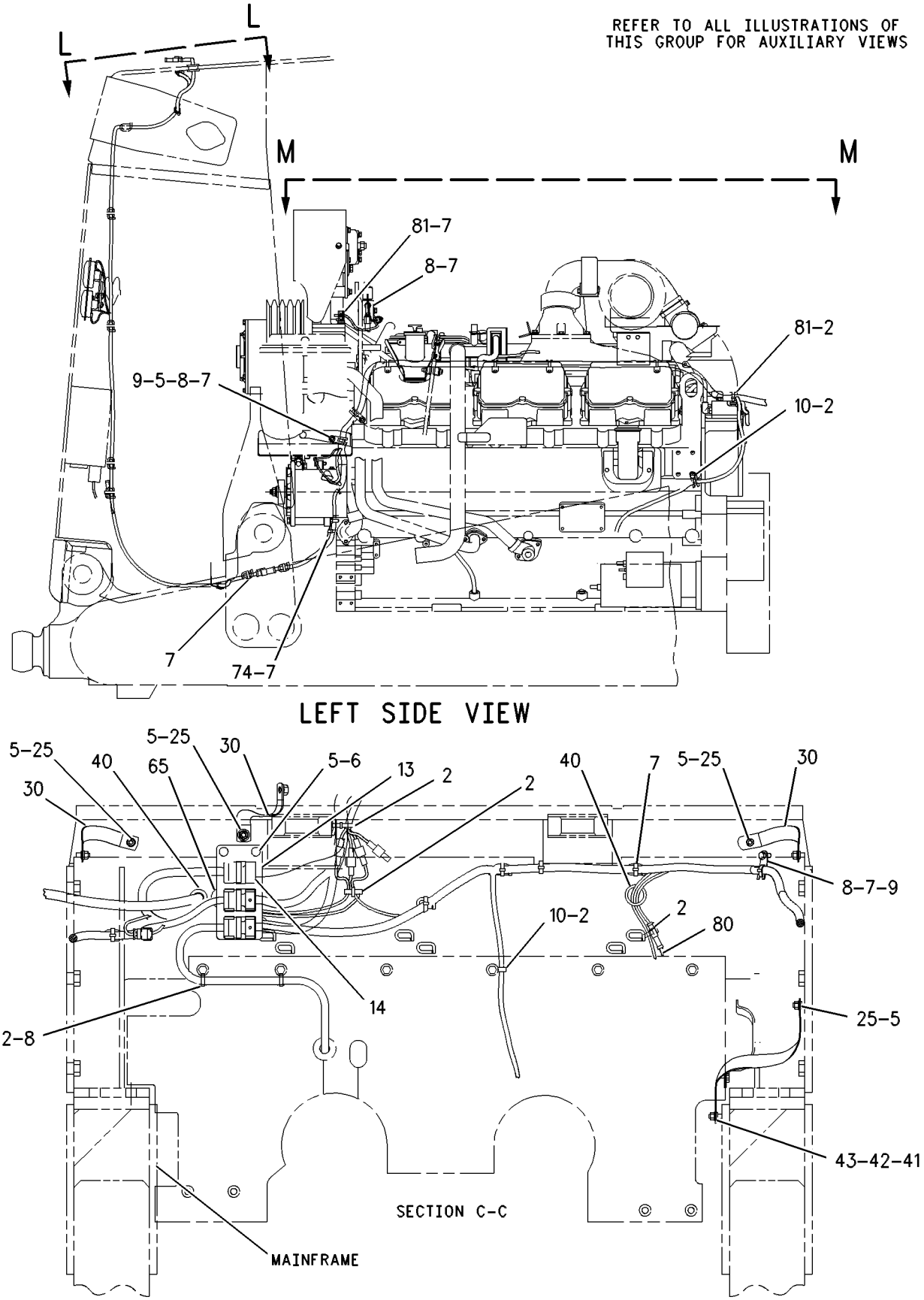

GRAPHIC #4 g00490724

106-8484 **BATTERY & WIRING GP** *(contd.)* **i01741332**

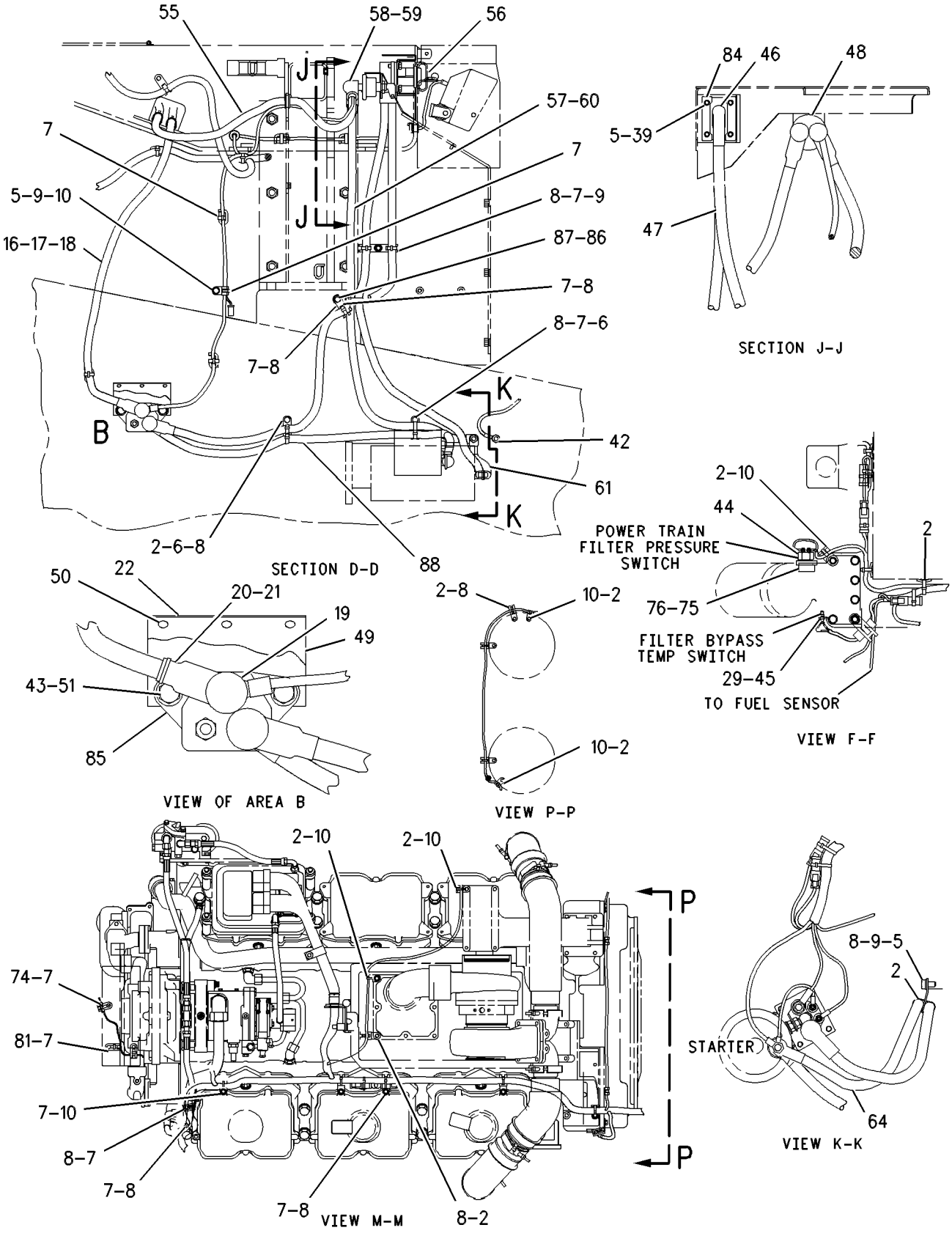

GRAPHIC #5 g00490725

ELECTRICAL AND STARTING SYSTEM

109-5749 BATTERY & WIRING GP

S/N: 3KR939-1453

SMCS-1401, 1402, 1408 **i01747353**

NOTE	REF NO	GRAPHIC REF	PART NUMBER	QTY	PART NAME 1 2 3 4 5 6 (PRODUCT LEVEL)	SEE PAGE
	1	1	**106-8485**	1	HARNESS AS-RADIATOR	
		1	**102-8807**	1	KIT-CONNECTING PLUG (2 PIN)	
					(INCLUDES PLUG AS, WEDGE, SEAL-INTERFACE)	
		1	**102-8802**	1	KIT-RECEPTACLE (2 PIN)	
					(INCLUDES RECEPTACLE AS & WEDGE)	
		1	**102-8809**	1	KIT-CONNECTING PLUG (4 PIN)	
					(INCLUDES PLUG AS, WEDGE, SEAL-INTERFACE)	
	2	5	**9G-8661**	1	SPACER (10X16X20MM THK)	
	3	1	**7T-0970**	1	HORN AS (24 VOLT)(HIGH TONE)	
	4	1	**7T-0969**	1	HORN AS (24 VOLT)(LOW TONE)	
					(EACH HORN AS INCLUDES)	
M		1	**8C-7581**	2	SCREW-MACHINE (M4X0.7X8MM)	
		1	**9B-7233**	2	LOCKWASHER	
		1	**096-6166**	2	WASHER-HARD (4.5X9X1MM THK)	
	5	1,2,4,5	**8T-4896**	29	WASHER-HARD (10.2X18.5X2.5MM THK)	
	6	1,4,5	**5S-7379**	8	BOLT (3/8-16X0.875 IN)	
B	7	1,2,3, 4,5	**9X-6772**	149	STRAP-CABLE	
	8	1,2,4,5	**4P-7581**	29	CLIP	
	9	2,4,5	**5M-3062**	10	BOLT (3/8-16X0.75 IN)	
	10	1,2,4,5	**4P-8134**	12	CLIP	
	11	5	**5P-8167**	1	BOLT (3/8-16X0.625 IN)	
	12	1	**106-8491**	1	HARNESS AS-ENGINE	
	13	4	**113-4316**	1	PLATE AS	
	14	4	**6C-3680**	6	RIVET-POP	
	15	4	**109-1645**	3	CLIP	
	16	5	**7T-9982**	1	CABLE AS	
E		5	**5P-0761**		CABLE (00GA)(RED) (160CM)	
		5	**1S-7251**	1	TERMINAL-RING (FOR 1/2 IN BOLT)	
		5	**8N-0869**	1	COVER-TERMINAL (RED)	
BE		5	**5P-0695**		CONDUIT	
		5	**1S-4915**	2	LINER-CONDUIT	
BE		5	**8T-2225**		TUBE-HEAT SHRINK	
		5	**3S-2093**	1	STRAP-CABLE	
	17	5	**8N-1725**	1	COVER-TERMINAL (RED)	
	18	4	**128-2976**	1	HARNESS AS (ETHER AID)	
	19	1,2,3, 4,5	**4P-7429**	7	CLIP	
	20	2	**7X-0293**	1	BOLT (3/8-16X4.75 IN)	
Y	21	2	**134-2252**	1	SENSOR GP-TEMPERATURE (POWERTRAIN OIL)	470
	22	2	**2P-8421**	1	ADAPTER-O-RING	
	23	2,5	**3J-1907**	4	SEAL-O-RING	
	24	2	**3K-6060**	2	LOCKNUT (3/8-16 THD)	
	25	2,4	**6V-8801**	11	NUT (3/8-16 THD)	
	26	2	**7X-0291**	2	BOLT (3/8-16X3.75 IN)	
	27	2	**123-6449**	1	WARNING GP-BACKUP	
		2	**3E-3365**	1	WEDGE-RECEPTACLE LOCK (2 PIN)	
		2	**8T-8729**	2	PIN-CONNECTOR	
		2	**102-8802**	1	KIT-RECEPTACLE (2 PIN)	
					(INCLUDES RECEPTACLE AS & WEDGE)	
	28	5	**3K-0360**	1	SEAL-O-RING	
	29	2,4	**7G-1060**	4	STRAP AS-GROUND	
	30	3	**109-5745**	1	HARNESS AS-RH FENDER	
	31	3	**109-5746**	1	HARNESS AS-LH FENDER	
Y	32	3	**124-9325**	1	SENSOR GP-FUEL LEVEL (ULTRASONIC)	445
	33	3	**8T-2501**	4	BOLT (3/8-16X2 IN)	
	34	4	**6S-4039**	2	GROMMET	

109-5749 BATTERY & WIRING GP *(contd.)* i01747353

NOTE	REF NO	GRAPHIC REF	PART NUMBER	QTY	PART NAME 1 2 3 4 5 6 (PRODUCT LEVEL)	SEE PAGE
	35	3	**5P-1075**	4	WASHER-HARD (10.2X22.5X3MM THK)	
	36	1	**7T-0266**	1	BRACKET AS	
		1	**1F-0750**	1	NUT-WELD (3/8-16 THD)	
	37	1	**8T-2502**	1	BOLT (3/8-16X1.125 IN)	
	38	1,5	**4L-6454**	5	BOLT (3/8-16X1 IN)	
	39	4	**2D-1290**	1	GROMMET	
	40	4	**6Y-6584**	1	STRAP AS-GROUND	
	41	4,5	**6V-8188**	3	NUT (1/2-13 THD)	
	42	2,4,5	**8T-4223**	5	WASHER-HARD (13.5X25.5X3MM THK)	
Y	43	5	**9X-7781**	1	SWITCH GP-BYPASS (POWERTRAIN FILTER PRESSURE)	497
	44	5	**3E-9350**	1	SWITCH AS-TEMPERATURE (FILTER BYPASS)	
		5	**3E-3365**	1	WEDGE-RECEPTACLE LOCK (2 PIN)	
		5	**8T-8729**	2	PIN-CONNECTOR	
		5	**102-8802**	1	KIT-RECEPTACLE (2 PIN)	
					(INCLUDES RECEPTACLE AS & WEDGE)	
	45	5	**8N-1825**	1	RECEPTACLE AS	
		5	**1S-7251**	2	TERMINAL-RING (FOR 1/2 IN BOLT)	
E		5	**5P-0747**		CABLE (00GA)(BLACK) (156CM)	
E		5	**5P-0761**		CABLE (00GA)(RED) (153CM)	
		5	**1S-4915**	2	LINER-CONDUIT	
BE		5	**8T-2225**		TUBE-HEAT SHRINK	
BE		5	**5P-0695**		CONDUIT	
	46	5	**8S-4211**	2	PLATE	
Y	47	5	**7N-0719**	1	SWITCH GP-DISCONNECT (BATTERY)	499
	48	5	**9W-2938**	1	COVER AS	
	49	5	**4D-6716**	3	RIVET-POP	
	50	5	**5C-6565**	2	BOLT (1/2-13X1.125 IN)	
	51	2	**8V-0622**	1	CABLE AS	
		2	**1M-6119**	2	BOLT-BATTERY TERMINAL (5/16-18X1.375 IN)	
		2	**1M-6120**	2	NUT-BATTERY TERMINAL (5/16-18 THD)	
E		2	**5P-0761**		CABLE (00GA)(RED) (14CM)	
		2	**9G-0003**	1	COVER-TERMINAL (BLACK)	
		2	**9G-0004**	1	COVER-TERMINAL (RED)	
		2	**8C-5917**	1	TERMINAL AS-BATTERY (POSITIVE)	
		2	**8T-9757**	1	TERMINAL AS-BATTERY (NEGATIVE)	
	52	2	**3E-8848**	1	SENSOR GP-SPEED (ODOMETER)	
	53	5	**7G-0535**	1	CABLE AS	
E		5	**5P-0747**		CABLE (00GA)(BLACK) (150CM)	
		5	**7N-5274**	1	COVER-TERMINAL (BLACK)	
		5	**3S-2093**	1	STRAP-CABLE	
BE		5	**5P-0695**		CONDUIT	
BE		5	**8T-2225**		TUBE-HEAT SHRINK	
		5	**1S-4915**	2	LINER-CONDUIT	
		5	**3S-6050**	1	TERMINAL AS-BATTERY (NEGATIVE)	
		5	**1M-6119**	1	BOLT-BATTERY TERMINAL (5/16-18X1.375 IN)	
		5	**1M-6120**	1	NUT-BATTERY TERMINAL (5/16-18 THD)	
	54	5	**9G-8909**	1	COVER-TERMINAL (BLACK)	
		5	**1S-7252**	1	TERMINAL-RING (FOR 3/8 IN BOLT)	
	55	5	**5T-4502**	1	CABLE AS	
E		5	**5P-0747**		CABLE (00GA)(BLACK) (115CM)	
	56	5	**1S-7252**	1	TERMINAL-RING (FOR 3/8 IN BOLT)	
		5	**9G-8909**	1	COVER-TERMINAL (BLACK)	
	57	5	**1S-7251**	1	TERMINAL-RING (FOR 1/2 IN BOLT)	
	58	5	**7T-7777**	1	CABLE AS	
E		5	**5P-0761**		CABLE (00GA)(RED) (109CM)	
		5	**1S-7251**	2	TERMINAL-RING (FOR 1/2 IN BOLT)	
		5	**8N-0869**	2	COVER-TERMINAL (RED)	
BE		5	**5P-0695**		CONDUIT	
		5	**1S-4915**	2	LINER-CONDUIT	

109-5749 **BATTERY & WIRING GP** *(contd.)* **i01747353**

NOTE	REF NO	GRAPHIC REF	PART NUMBER	QTY	PART NAME 1 2 3 4 5 6 (PRODUCT LEVEL)	SEE PAGE
BE		5	**8T-2225**		TUBE-HEAT SHRINK	
	59	2	**3D-2824**	1	SEAL-O-RING	
	60	2	**8T-0151**	1	ADAPTER	
	61	5	**061-7278**	1	CABLE AS	
		5	**5P-0747**		CABLE (00GA)(BLACK) (53CM)	
		5	**1S-7251**	1	TERMINAL-RING (FOR 1/2 IN BOLT)	
	62	4	**5P-6887**	1	GROMMET	
	63	3	**111-4402**	1	FILTER-FOAM	
	64	3	**3E-7753**	1	FLOAT AS	
	65	3	**6V-5051**	1	SEAL-O-RING	
	66	2,3	**7B-1251**	6	GROMMET	
	67	3	**8T-8908**	1	BOLT (1/4-20X1 IN)	
	68	3	**8T-4205**	1	WASHER-HARD (7.2X14.5X2MM THK)	
	69	3	**3E-5239**	1	RELAY AS (24 VOLT)	
	70	4,5	**4P-7428**	2	CLIP	
	71	5	**3T-9549**	1	ADAPTER	
	72	5	**2S-4078**	1	SEAL-O-RING	
	73	4	**148-9652**	1	PLUG AS-AIR CONDITIONER	
Y	74	2	**118-7226**	1	SENSOR GP-TEMPERATURE (BRAKE OIL)	469
D	75	2	**5P-6025**		LOCKWIRE (.1M)	
Y	76	5	**134-2252**	1	SENSOR GP-TEMPERATURE (HYDRAULIC OIL)	470
	77	2,4	**118-6365**	2	PLATE AS	
		2,4	**6V-6716**	2	RIVET-TRUSS HEAD	
		2,4	**109-1645**	1	CLIP	
	78	5	**8S-2634**	1	COVER AS	
		5	**2P-2975**	2	SEAL-O-RING	
	79	2	**8E-4260**	1	HOLD-DOWN AS	
	80	2	**9X-9730**	2	BATTERY (12 VOLT)	
					(EACH INCLUDES)	
		1	**7N-0060**	6	VENT AS	
Y	81	5	*9W-0742*	1	JUNCTION BLOCK GP	413
	82	5	**4L-9337**	1	BOLT (3/8-16X1.5 IN)	

B-USE AS REQUIRED
D-ORDER BY THE METER
E-ORDER BY THE CENTIMETER
M-METRIC PART
Y-SEPARATE ILLUSTRATION

109-5749 **BATTERY & WIRING GP** *(contd.)* **i01747353**

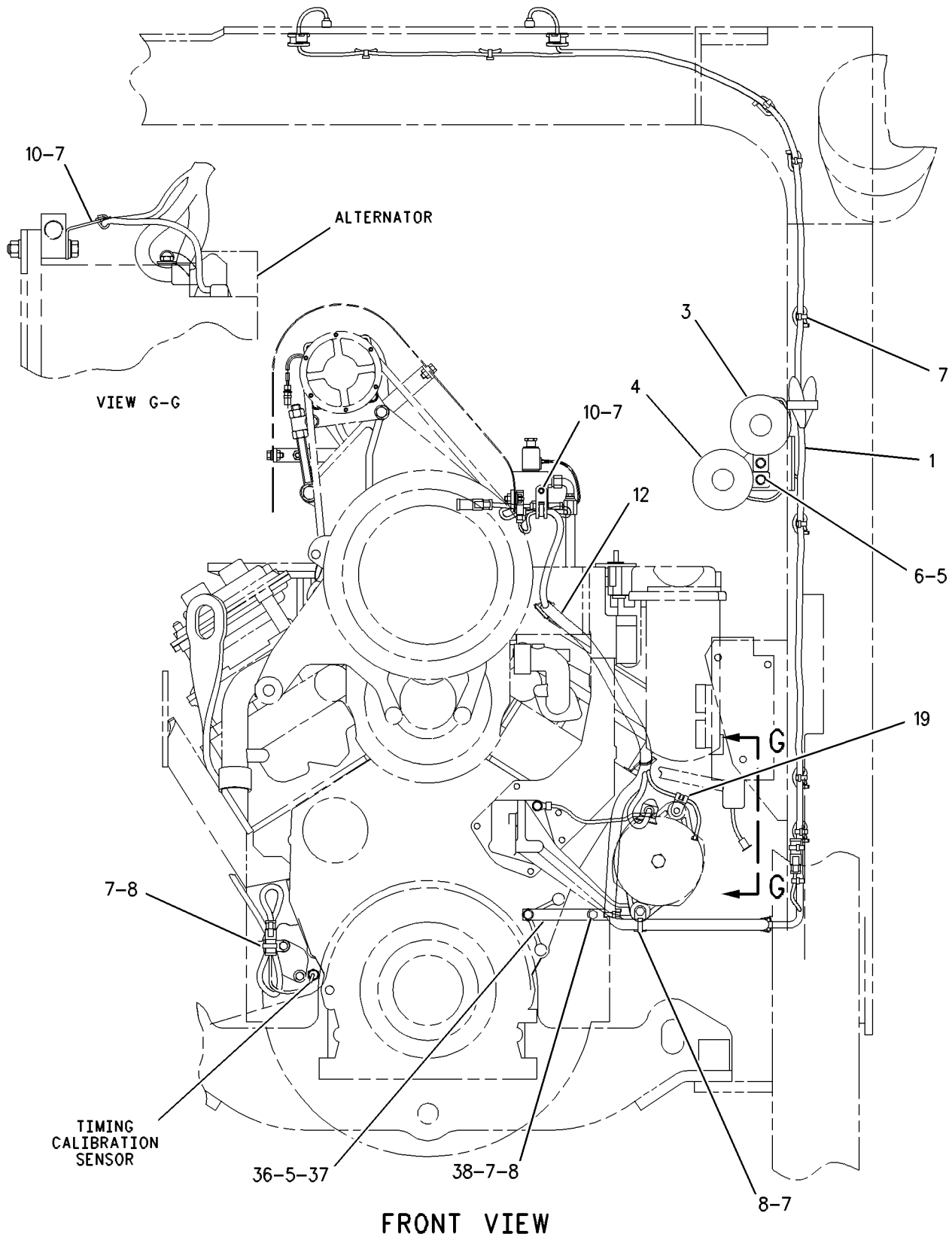

GRAPHIC #1 g00649187

109-5749 **BATTERY & WIRING GP** *(contd.)* **i01747353**

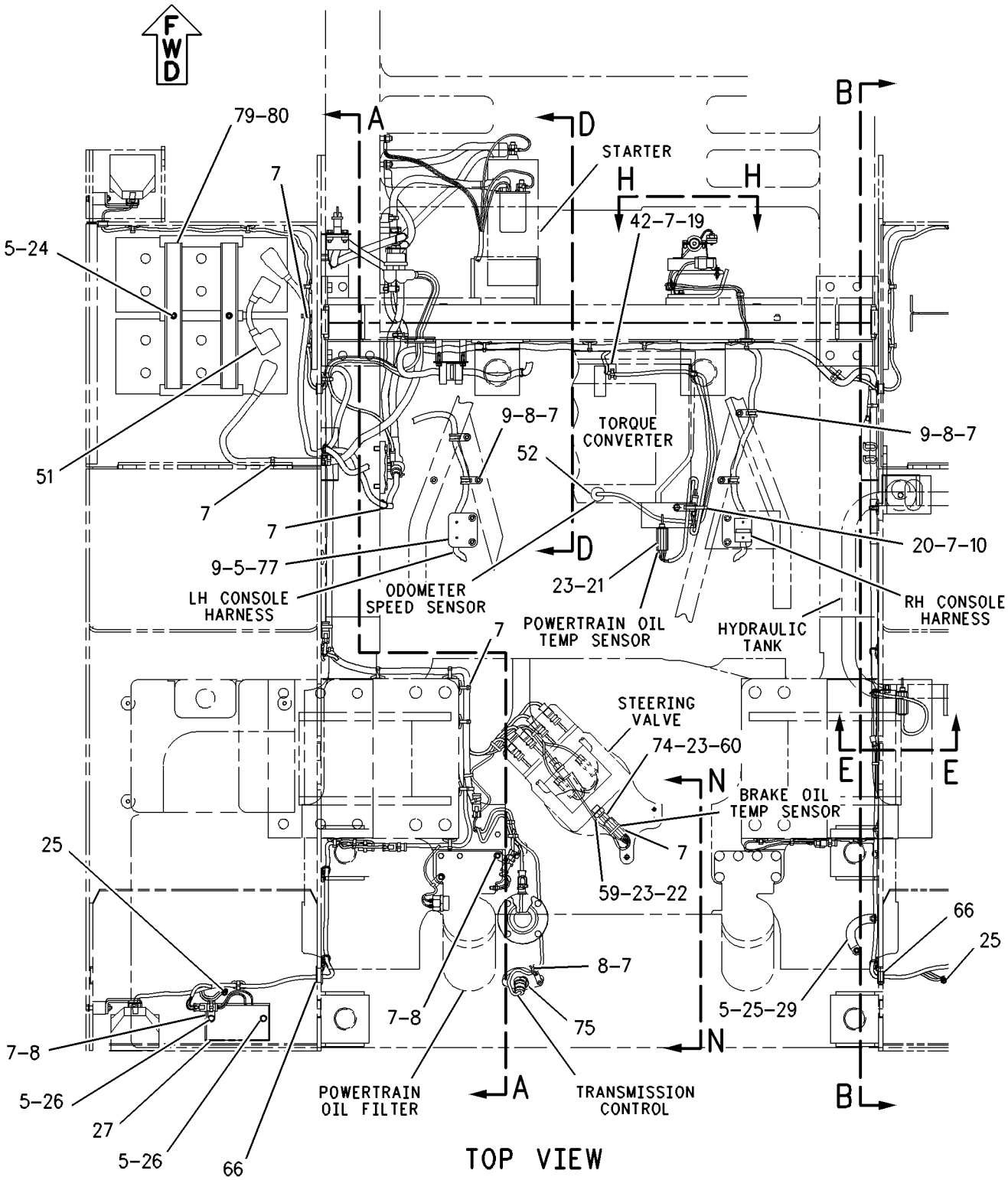

REFER TO ALL ILLUSTRATIONS OF THIS GROUP FOR AUXILIARY VIEWS

GRAPHIC #2 g00649188

109-5749 **BATTERY & WIRING GP** ***(contd.)*** **i01747353**

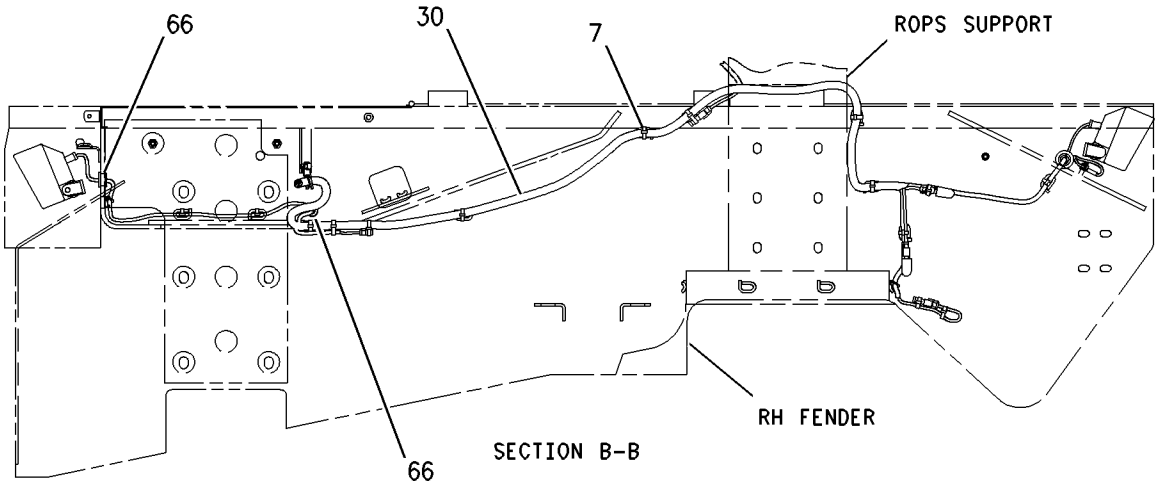

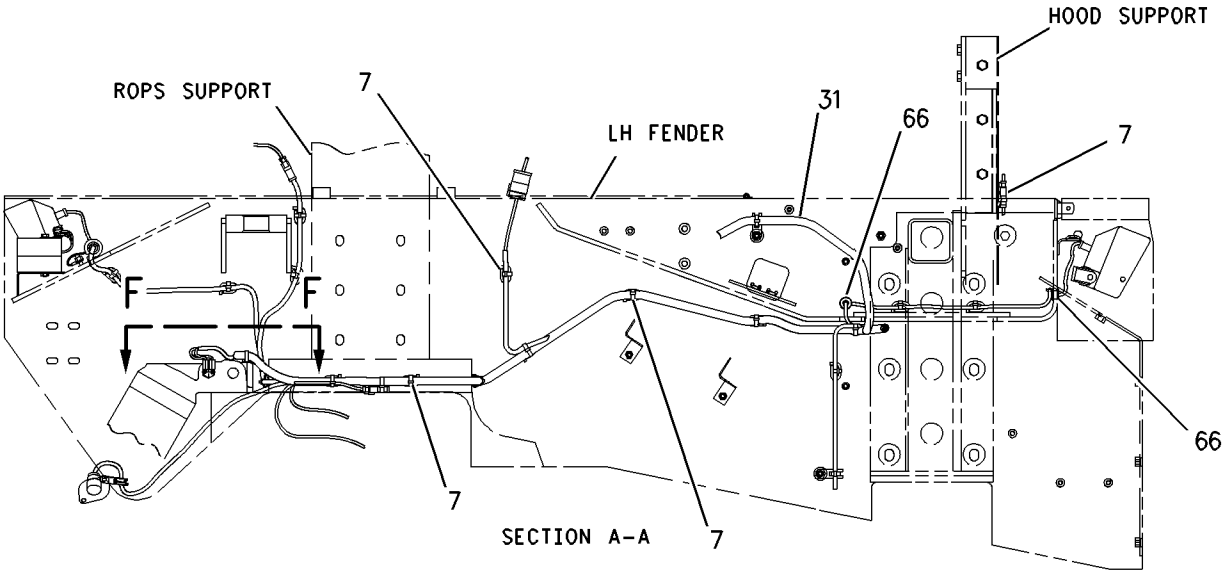

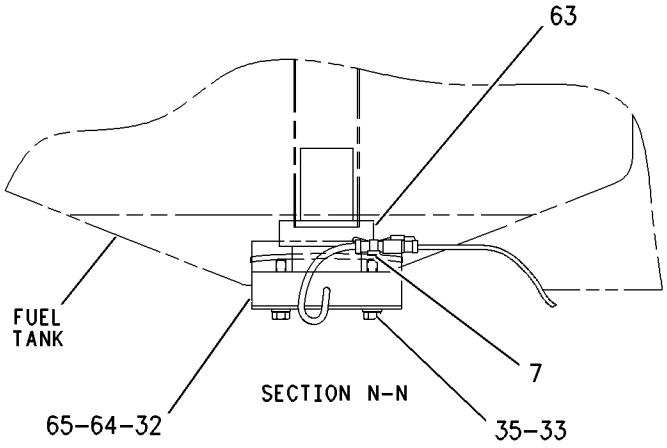

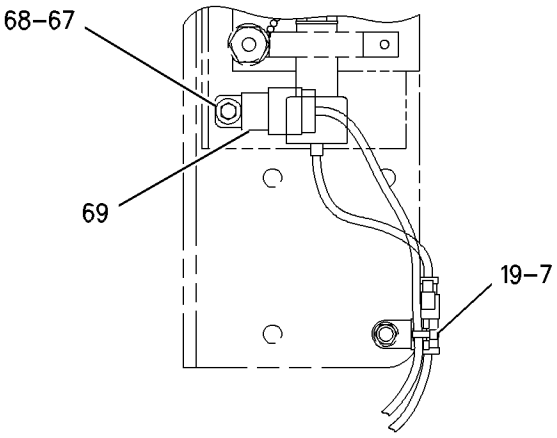

REFER TO ALL ILLUSTRATIONS OF THIS GROUP FOR AUXILIARY VIEWS

GRAPHIC #3 g00738150

109-5749 **BATTERY & WIRING GP** *(contd.)* **i01747353**

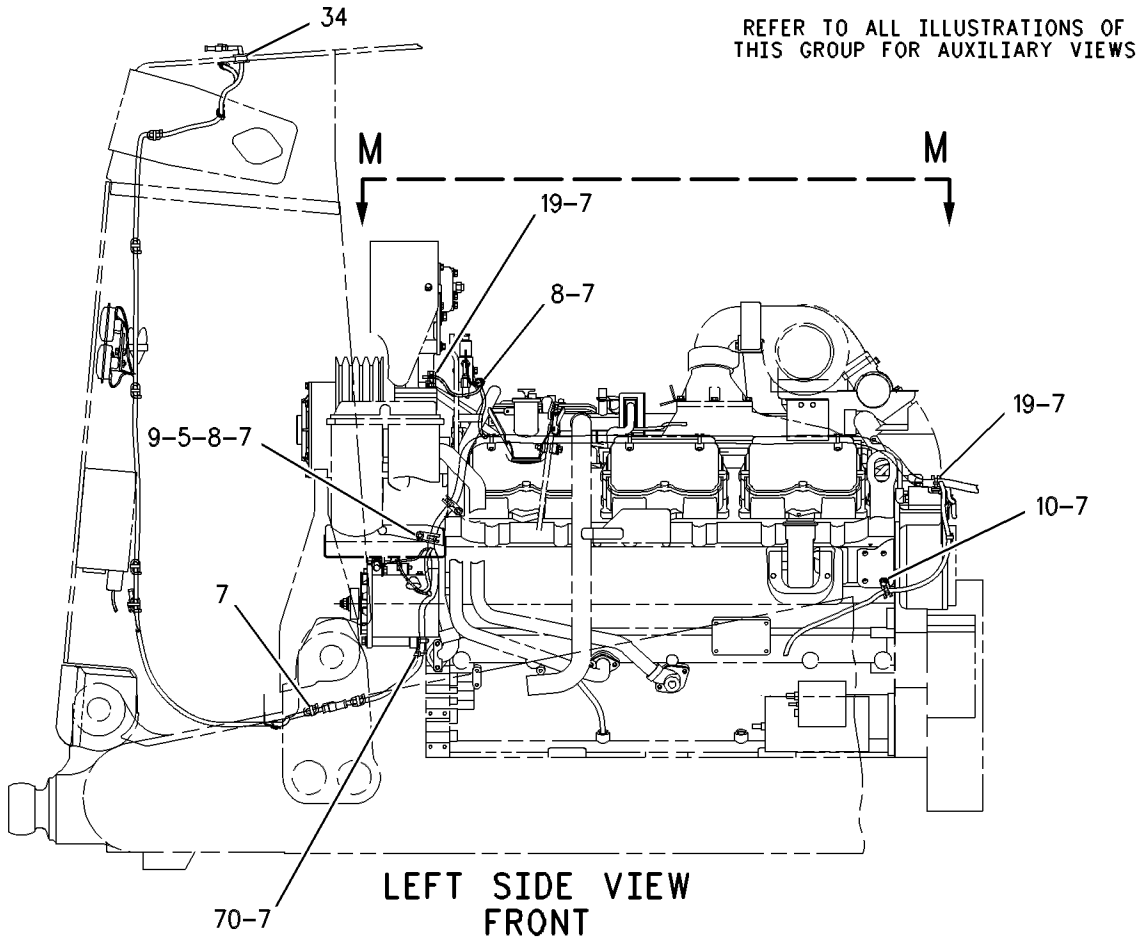

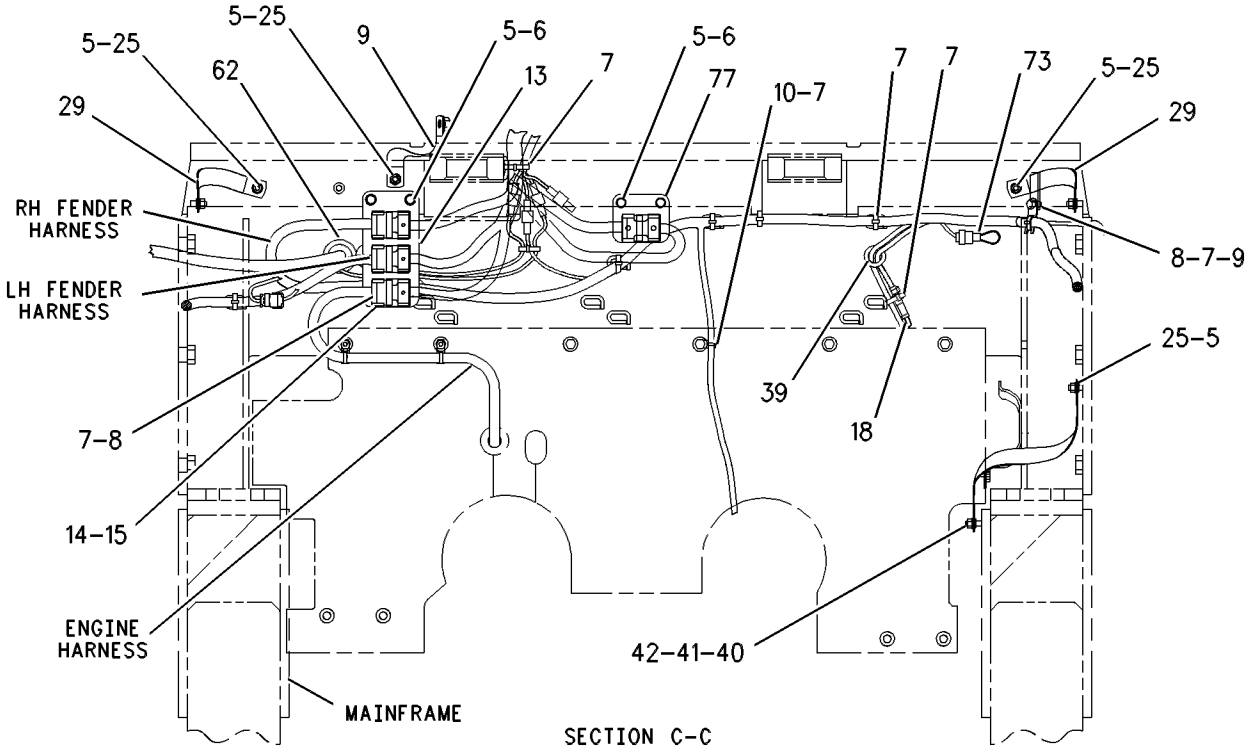

GRAPHIC #4 g00649190

109-5749 **BATTERY & WIRING GP** *(contd.)* **i01747353**

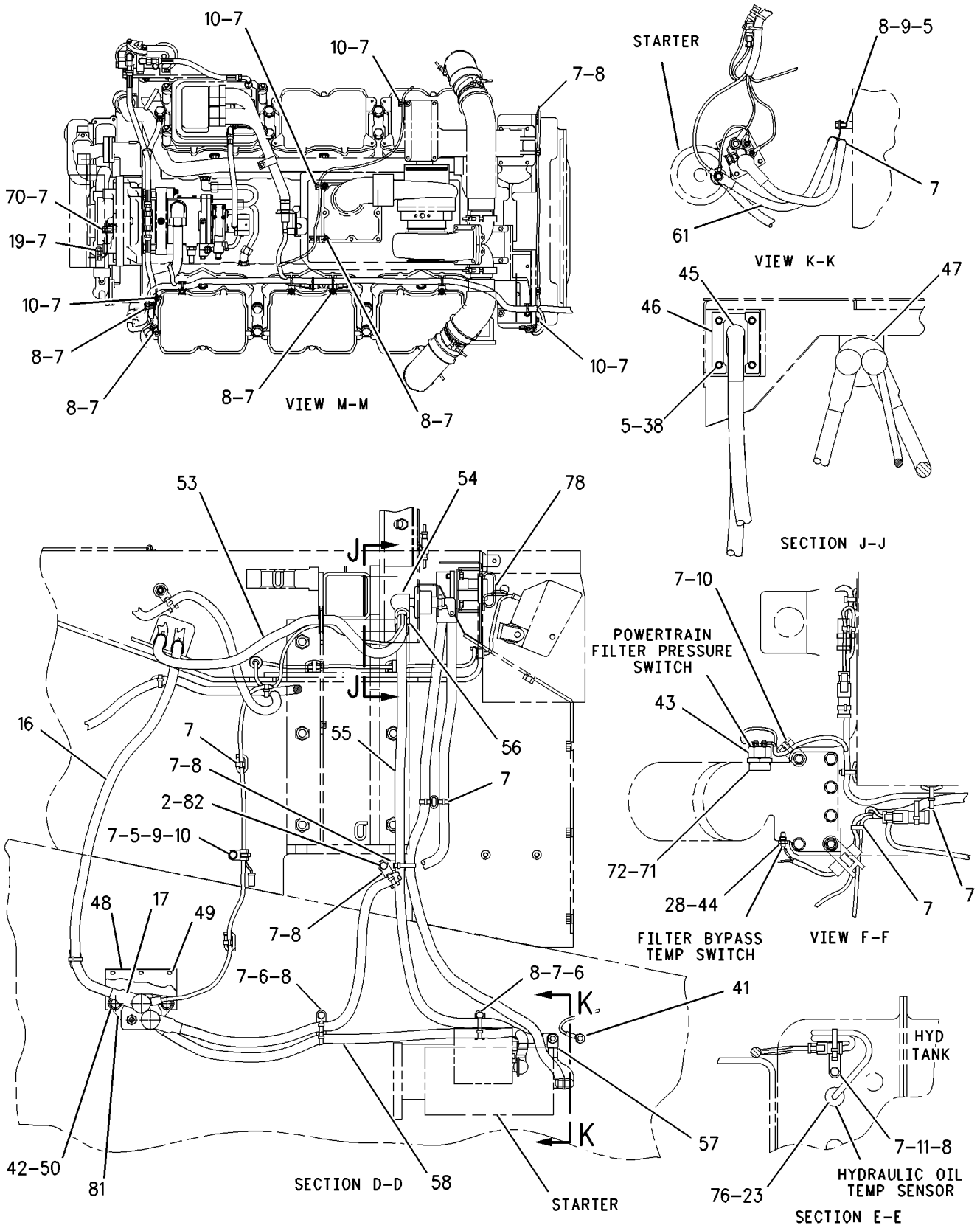

GRAPHIC #5 g00649191

ELECTRICAL AND STARTING SYSTEM

109-5749 BATTERY & WIRING GP

S/N: 3KR1454-1494

SMCS-1401, 1402, 1408 **i01741395**

NOTE	REF NO	GRAPHIC REF	PART NUMBER	QTY	PART NAME 1 2 3 4 5 6 (PRODUCT LEVEL)	SEE PAGE
	1	1	**106-8485**	1	HARNESS AS-RADIATOR	
		1	**102-8807**	1	KIT-CONNECTING PLUG (2 PIN)	
					(INCLUDES PLUG AS, WEDGE, SEAL-INTERFACE)	
		1	**102-8802**	1	KIT-RECEPTACLE (2 PIN)	
					(INCLUDES RECEPTACLE AS & WEDGE)	
		1	**102-8809**	1	KIT-CONNECTING PLUG (4 PIN)	
					(INCLUDES PLUG AS, WEDGE, SEAL-INTERFACE)	
	2	5	**9G-8661**	1	SPACER (10X16X20MM THK)	
	3	1	**7T-0970**	1	HORN AS (24 VOLT)(HIGH TONE)	
	4	1	**7T-0969**	1	HORN AS (24 VOLT)(LOW TONE)	
					(EACH HORN AS INCLUDES)	
M		1	**8C-7581**	2	SCREW-MACHINE (M4X0.7X8MM)	
		1	**9B-7233**	2	LOCKWASHER	
		1	**096-6166**	2	WASHER-HARD (4.5X9X1MM THK)	
	5	1,2,4,5	**8T-4896**	29	WASHER-HARD (10.2X18.5X2.5MM THK)	
	6	1,4,5	**5S-7379**	8	BOLT (3/8-16X0.875 IN)	
B	7	1,2,3, 4,5	**9X-6772**	149	STRAP-CABLE	
	8	1,2,4,5	**4P-7581**	29	CLIP	
	9	2,4,5	**5M-3062**	10	BOLT (3/8-16X0.75 IN)	
	10	1,2,4,5	**4P-8134**	12	CLIP	
	11	5	**5P-8167**	1	BOLT (3/8-16X0.625 IN)	
	12	1	**106-8491**	1	HARNESS AS-ENGINE	
	13	4	**113-4316**	1	PLATE AS	
	14	4	**6C-3680**	6	RIVET-POP	
	15	4	**109-1645**	3	CLIP	
	16	5	**7T-9982**	1	CABLE AS	
E		5	**5P-0761**		CABLE (00GA)(RED) (160CM)	
		5	**1S-7251**	1	TERMINAL-RING (FOR 1/2 IN BOLT)	
		5	**8N-0869**	1	COVER-TERMINAL (RED)	
E		5	**5P-0695**		CONDUIT (142CM)	
		5	**1S-4915**	2	LINER-CONDUIT	
E		5	**8T-2225**		TUBE-HEAT SHRINK (23CM)	
		5	**3S-2093**	1	STRAP-CABLE	
	17	5	**8N-1725**	1	COVER-TERMINAL (RED)	
	18	4	**128-2976**	1	HARNESS AS	
	19	1,2,3, 4,5	**4P-7429**	7	CLIP	
	20	2	**7X-0293**	1	BOLT (3/8-16X4.75 IN)	
Y	21	2	**134-2252**	1	SENSOR GP-TEMPERATURE (POWERTRAIN OIL)	470
	22	2	**2P-8421**	1	ADAPTER-O-RING	
	23	2,5	**3J-1907**	4	SEAL-O-RING	
	24	2	**3K-6060**	2	LOCKNUT (3/8-16 THD)	
	25	2,4	**6V-8801**	11	NUT (3/8-16 THD)	
	26	2	**7X-0291**	2	BOLT (3/8-16X3.75 IN)	
	27	2	**123-6449**	1	WARNING GP-BACKUP	
		2	**3E-3365**	1	WEDGE-RECEPTACLE LOCK (2 PIN)	
		2	**8T-8729**	2	PIN-CONNECTOR	
		2	**102-8802**	1	KIT-RECEPTACLE (2 PIN)	
					(INCLUDES RECEPTACLE & WEDGE)	
	28	5	**3K-0360**	1	SEAL-O-RING	
	29	2,4	**7G-1060**	4	STRAP AS-GROUND	
	30	3	**109-5745**	1	HARNESS AS-RH FENDER	
	31	3	**109-5746**	1	HARNESS AS-LH FENDER	
Y	32	3	**124-9325**	1	SENSOR GP-FUEL LEVEL (ULTRASONIC)	445
	33	3	**8T-2501**	4	BOLT (3/8-16X2 IN)	
	34	4	**6S-4039**	2	GROMMET	

109-5749 BATTERY & WIRING GP *(contd.)* i01741395

NOTE	REF NO	GRAPHIC REF	PART NUMBER	QTY	PART NAME 1 2 3 4 5 6 (PRODUCT LEVEL)	SEE PAGE
	35	3	**5P-1075**	4	WASHER-HARD (10.2X22.5X3MM THK)	
	36	1	**7T-0266**	1	BRACKET AS	
		1	**1F-0750**	1	NUT-WELD (3/8-16 THD)	
	37	1	**8T-2502**	1	BOLT (3/8-16X1.125 IN)	
	38	1,5	**4L-6454**	5	BOLT (3/8-16X1 IN)	
	39	4	**2D-1290**	1	GROMMET	
	40	4	**6Y-6584**	1	STRAP AS-GROUND	
	41	4,5	**6V-8188**	3	NUT (1/2-13 THD)	
	42	2,4,5	**8T-4223**	5	WASHER-HARD (13.5X25.5X3MM THK)	
CY	43	5	**164-7577**	1	SWITCH GP-BYPASS (POWERTRAIN FILTER PRESSURE)	498
	44	5	**3E-9350**	1	SWITCH AS-TEMPERATURE (FILTER BYPASS)	
		5	**3E-3365**	1	WEDGE-RECEPTACLE LOCK (2 PIN)	
		5	**8T-8729**	2	PIN-CONNECTOR	
		5	**102-8802**	1	KIT-RECEPTACLE (2 PIN)	
					(INCLUDES RECEPTACLE & WEDGE)	
	45	5	**8N-1825**	1	RECEPTACLE AS	
		5	**1S-7251**	2	TERMINAL-RING (FOR 1/2 IN BOLT)	
E		5	**5P-0747**		CABLE (00GA)(BLACK) (156CM)	
E		5	**5P-0761**		CABLE (00GA)(RED) (153CM)	
		5	**1S-4915**	2	LINER-CONDUIT	
BE		5	**8T-2225**		TUBE-HEAT SHRINK	
BE		5	**5P-0695**		CONDUIT	
	46	5	**8S-4211**	2	PLATE	
Y	47	5	**7N-0719**	1	SWITCH GP-DISCONNECT (BATTERY)	499
	48	5	**9W-2938**	1	COVER AS	
	49	5	**4D-6716**	3	RIVET-POP	
	50	5	**5C-6565**	2	BOLT (1/2-13X1.125 IN)	
	51	2	**8V-0622**	1	CABLE AS	
		2	**1M-6119**	2	BOLT-BATTERY TERMINAL (5/16-18X1.375 IN)	
		2	**1M-6120**	2	NUT-BATTERY TERMINAL (5/16-18 THD)	
E		2	**5P-0761**		CABLE (00GA)(RED) (14CM)	
		2	**9G-0003**	1	COVER-TERMINAL (BLACK)	
		2	**9G-0004**	1	COVER-TERMINAL (RED)	
		2	**8C-5917**	1	TERMINAL AS-BATTERY (POSITIVE)	
		2	**8T-9757**	1	TERMINAL AS-BATTERY (NEGATIVE)	
CY	52	2	**183-5011**	1	SENSOR GP-SPEED (ODOMETER)	466
	53	5	**7G-0535**	1	CABLE AS	
E		5	**5P-0747**		CABLE (00GA)(BLACK) (150CM)	
		5	**7N-5274**	1	COVER-TERMINAL (BLACK)	
		5	**3S-2093**	1	STRAP-CABLE	
BE		5	**5P-0695**		CONDUIT	
BE		5	**8T-2225**		TUBE-HEAT SHRINK	
		5	**1S-4915**	2	LINER-CONDUIT	
		5	**3S-6050**	1	TERMINAL AS-BATTERY (NEGATIVE)	
		5	**1M-6119**	1	BOLT-BATTERY TERMINAL (5/16-18X1.375 IN)	
		5	**1M-6120**	1	NUT-BATTERY TERMINAL (5/16-18 THD)	
	54	5	**9G-8909**	1	COVER-TERMINAL (BLACK)	
		5	**1S-7252**	1	TERMINAL-RING (FOR 3/8 IN BOLT)	
	55	5	**5T-4502**	1	CABLE AS	
E		5	**5P-0747**		CABLE (00GA)(BLACK) (115CM)	
	56	5	**1S-7252**	1	TERMINAL-RING (FOR 3/8 IN BOLT)	
		5	**9G-8909**	1	COVER-TERMINAL (BLACK)	
	57	5	**1S-7251**	1	TERMINAL-RING (FOR 1/2 IN BOLT)	
	58	5	**7T-7777**	1	CABLE AS	
E		5	**5P-0761**		CABLE (00GA)(RED) (109CM)	
		5	**1S-7251**	2	TERMINAL-RING (FOR 1/2 IN BOLT)	
		5	**8N-0869**	2	COVER-TERMINAL (RED)	
BE		5	**5P-0695**		CONDUIT	
		5	**1S-4915**	2	LINER-CONDUIT	

109-5749 **BATTERY & WIRING GP** *(contd.)* **i01741395**

NOTE	REF NO	GRAPHIC REF	PART NUMBER	QTY	PART NAME 1 2 3 4 5 6 (PRODUCT LEVEL)	SEE PAGE
BE		5	**8T-2225**		TUBE-HEAT SHRINK	
	59	2	**3D-2824**	1	SEAL-O-RING	
	60	2	**8T-0151**	1	ADAPTER	
	61	5	**061-7278**	1	CABLE AS	
		5	**5P-0747**		CABLE (00GA)(BLACK) (53CM)	
		5	**1S-7251**	1	TERMINAL-RING (FOR 1/2 IN BOLT)	
	62	4	**5P-6887**	1	GROMMET	
	63	3	**111-4402**	1	FILTER-FOAM	
	64	3	**3E-7753**	1	FLOAT AS	
	65	3	**6V-5051**	1	SEAL-O-RING	
	66	2,3	**7B-1251**	6	GROMMET	
	67	3	**8T-8908**	1	BOLT (1/4-20X1 IN)	
	68	3	**8T-4205**	1	WASHER-HARD (7.2X14.5X2MM THK)	
	69	3	**3E-5239**	1	RELAY AS (24 VOLT)	
	70	4,5	**4P-7428**	2	CLIP	
	71	5	**3T-9549**	1	ADAPTER	
	72	5	**2S-4078**	1	SEAL-O-RING	
	73	4	**148-9652**	1	PLUG AS-AIR CONDITIONER	
Y	74	2	**118-7226**	1	SENSOR GP-TEMPERATURE (BRAKE OIL)	469
D	75	2	**5P-6025**		LOCKWIRE (.1M)	
Y	76	5	**134-2252**	1	SENSOR GP-TEMPERATURE (HYDRAULIC OIL)	470
	77	2,4	**118-6365**	2	PLATE AS	
		2,4	**6V-6716**	2	RIVET-TRUSS HEAD	
		2,4	**109-1645**	1	CLIP	
	78	5	**8S-2634**	1	COVER AS	
		5	**2P-2975**	2	SEAL-O-RING	
	79	2	**8E-4260**	1	HOLD-DOWN AS	
	80	2	**9X-9730**	2	BATTERY (12 VOLT)	
Y	81	5	*9W-0742*	1	JUNCTION BLOCK GP	413
	82	5	**4L-9337**	1	BOLT (3/8-16X1.5 IN)	

B-USE AS REQUIRED
C-CHANGE FROM PREVIOUS TYPE
D-ORDER BY THE METER
E-ORDER BY THE CENTIMETER
M-METRIC PART
Y-SEPARATE ILLUSTRATION

109-5749 **BATTERY & WIRING GP** *(contd.)* **i01741395**

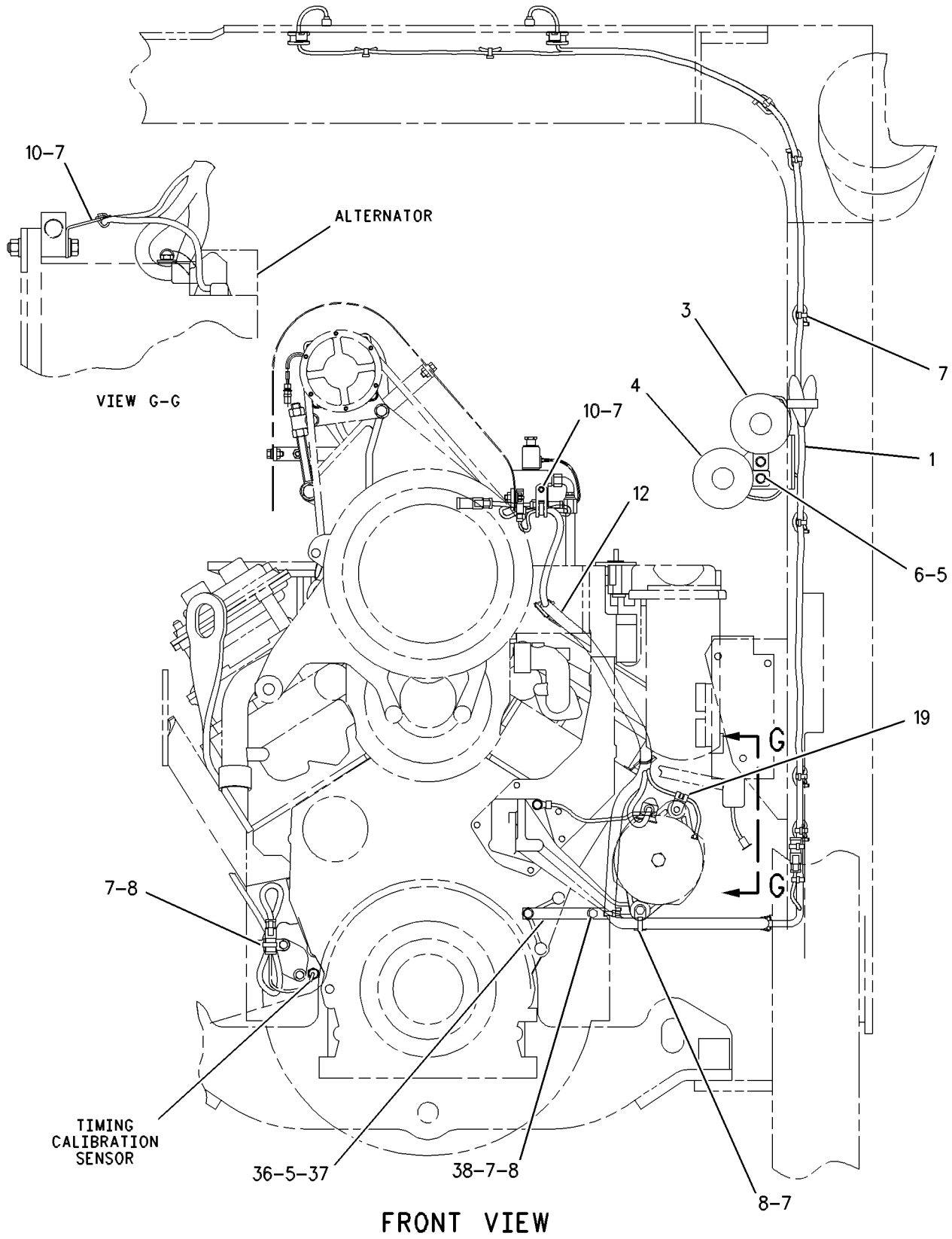

GRAPHIC #1 g00649187

109-5749 **BATTERY & WIRING GP** *(contd.)* **i01741395**

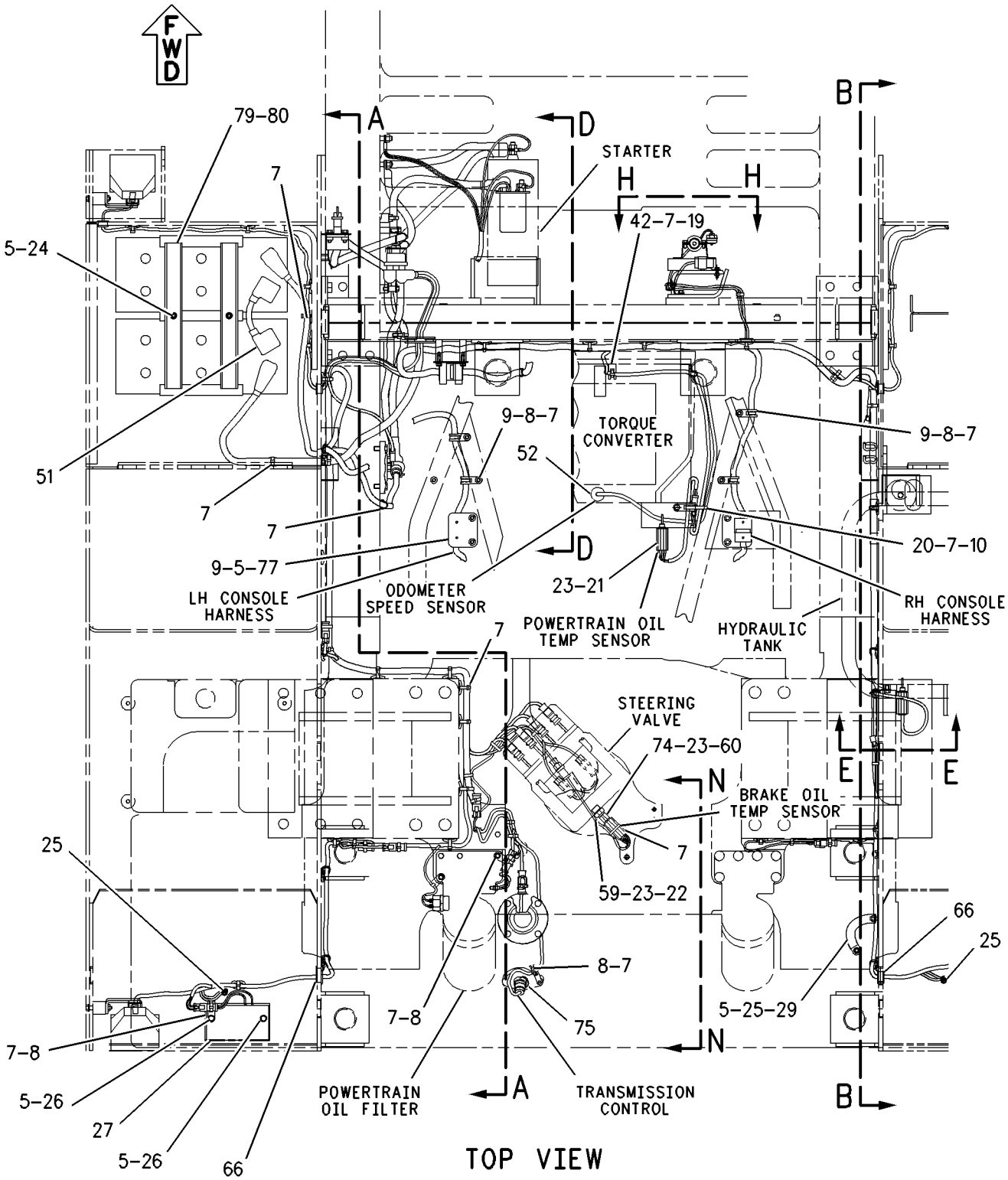

REFER TO ALL ILLUSTRATIONS OF THIS GROUP FOR AUXILIARY VIEWS

GRAPHIC #2 g00649188

109-5749 **BATTERY & WIRING GP** ***(contd.)*** **i01741395**

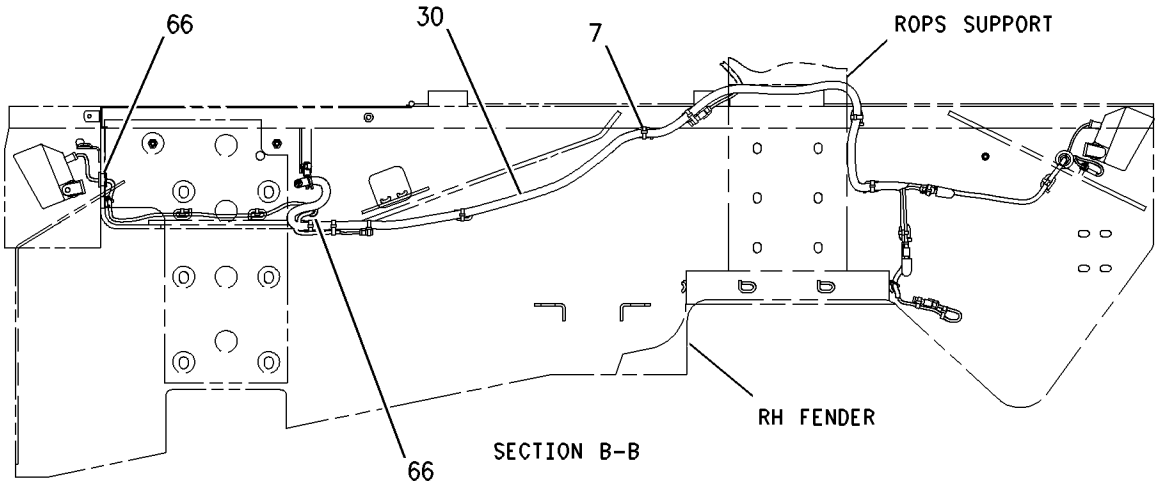

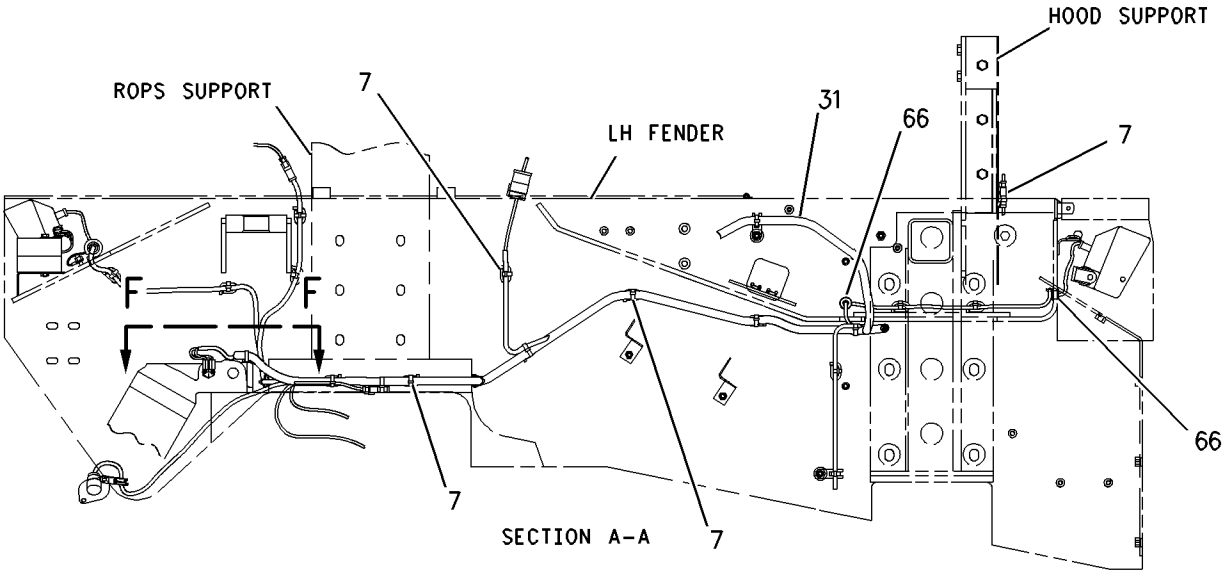

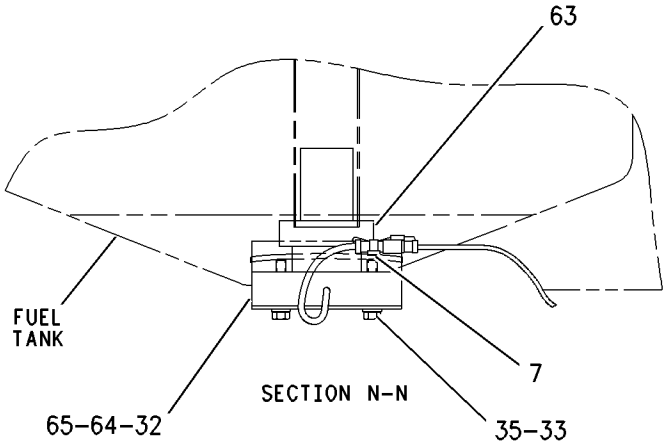

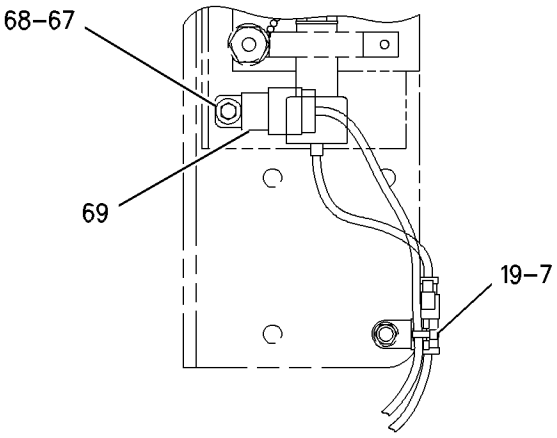

REFER TO ALL ILLUSTRATIONS OF THIS GROUP FOR AUXILIARY VIEWS

GRAPHIC #3 g00738150

109-5749 **BATTERY & WIRING GP** *(contd.)* **i01741395**

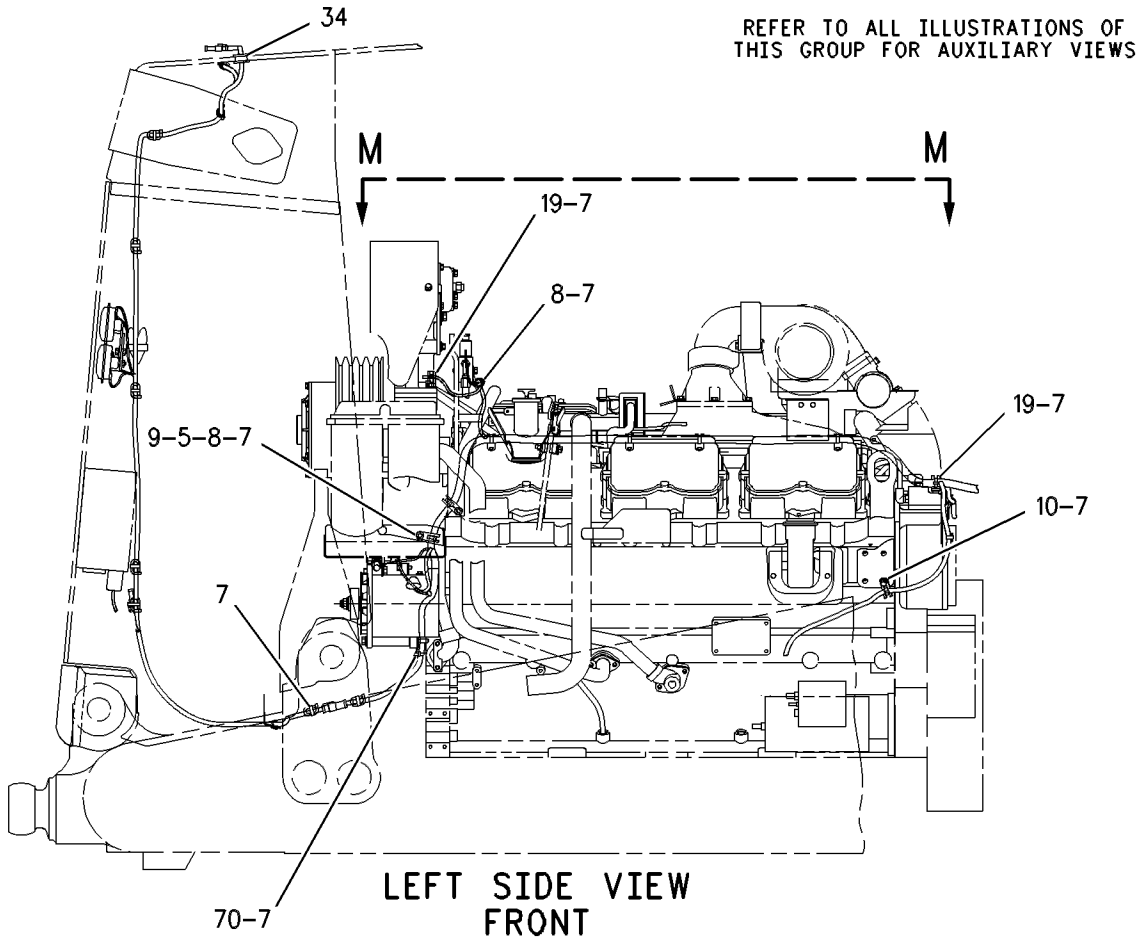

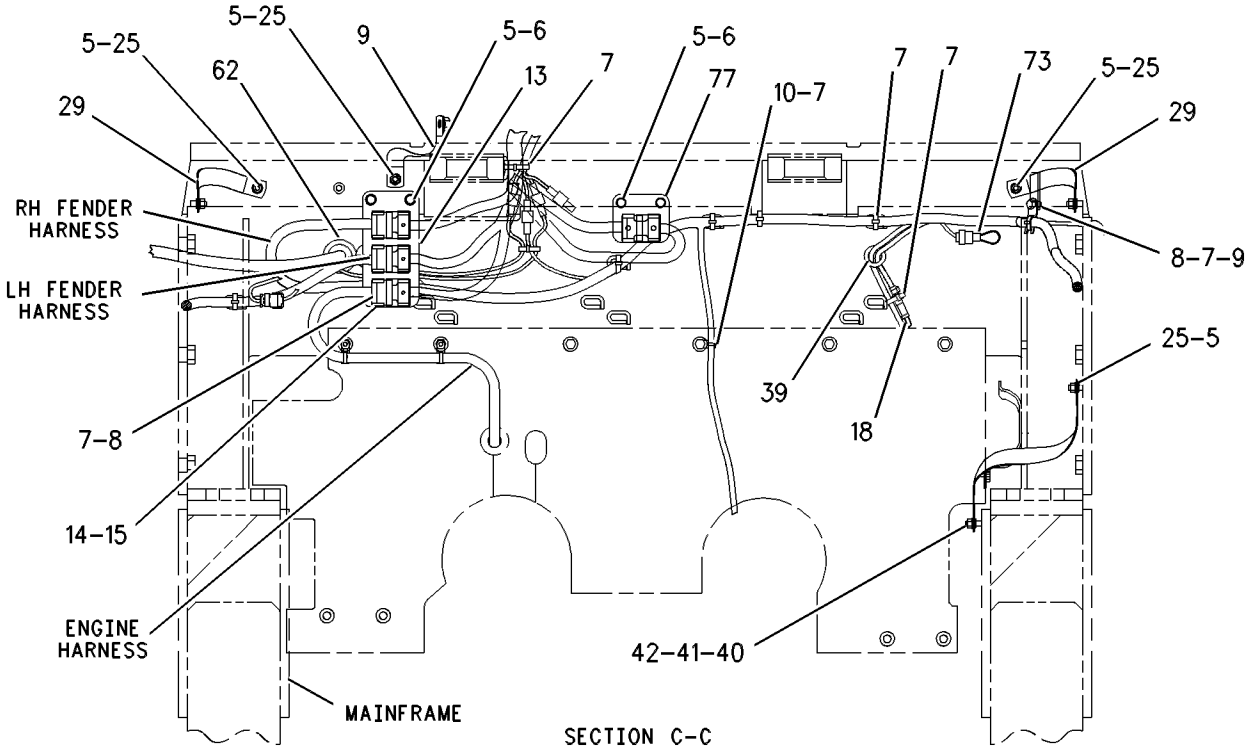

GRAPHIC #4 g00649190

109-5749 **BATTERY & WIRING GP** *(contd.)* **i01741395**

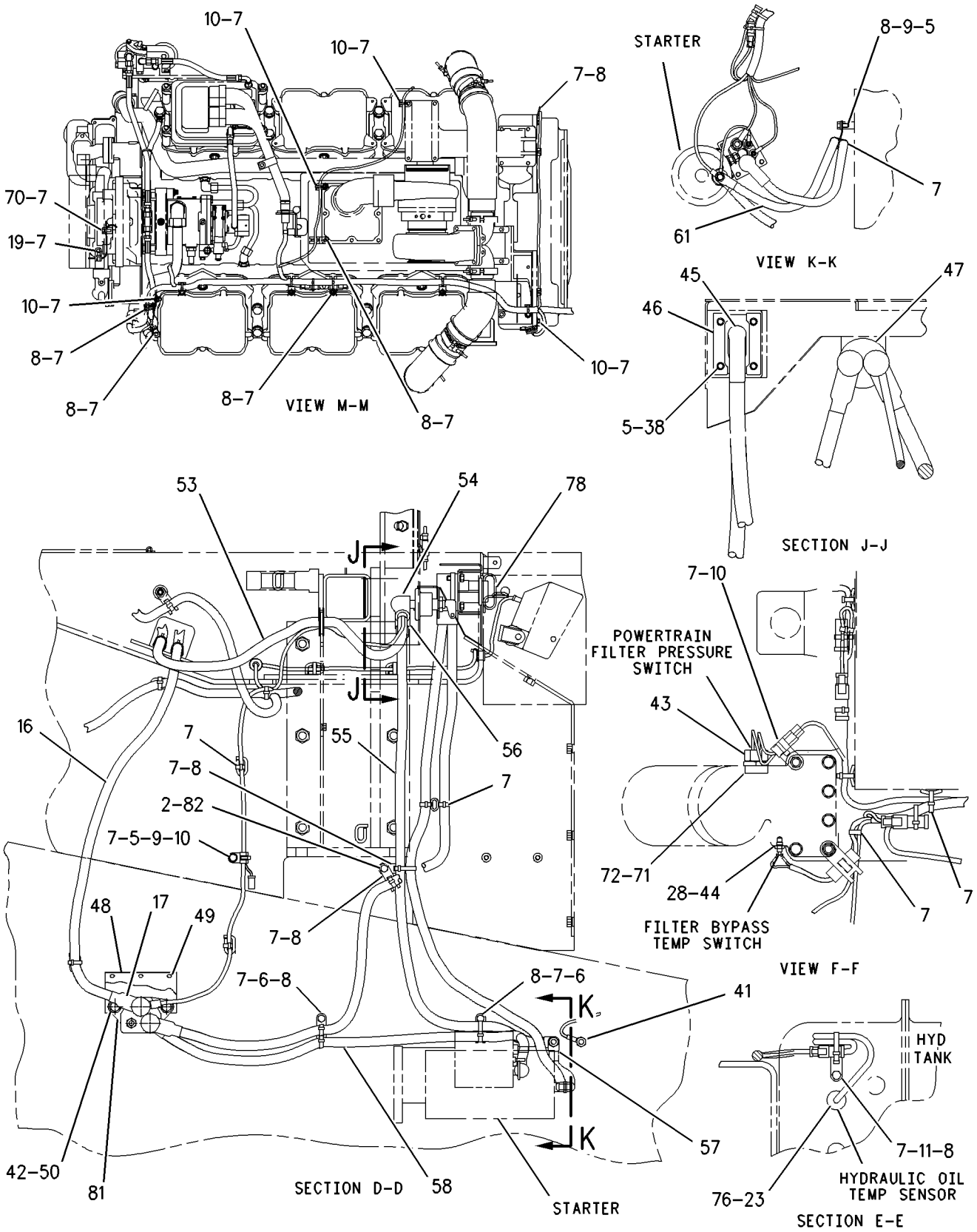

GRAPHIC #5 g00712712

ELECTRICAL AND STARTING SYSTEM

109-5749 BATTERY & WIRING GP

S/N: 3KR1495-UP

SMCS-1401, 1402, 1408 **i01749391**

NOTE	REF NO	GRAPHIC REF	PART NUMBER	QTY	PART NAME 1 2 3 4 5 6 (PRODUCT LEVEL)	SEE PAGE
	1	1	**106-8485**	1	HARNESS AS-RADIATOR	
		1	**102-8807**	1	KIT-CONNECTING PLUG (2 PIN)	
					(INCLUDES PLUG AS, WEDGE, SEAL-INTERFACE)	
		1	**102-8802**	1	KIT-RECEPTACLE (2 PIN)	
					(INCLUDES RECEPTACLE AS & WEDGE)	
		1	**102-8809**	1	KIT-CONNECTING PLUG (4 PIN)	
					(INCLUDES PLUG AS, WEDGE, SEAL-INTERFACE)	
	2	5	**9G-8661**	1	SPACER (10X16X20MM THK)	
	3	1	**7T-0970**	1	HORN AS (24 VOLT)(HIGH TONE)	
	4	1	**7T-0969**	1	HORN AS (24 VOLT)(LOW TONE)	
					(EACH HORN AS INCLUDES)	
M		1	**8C-7581**	2	SCREW-MACHINE (M4X0.7X8MM)	
		1	**9B-7233**	2	LOCKWASHER	
		1	**096-6166**	2	WASHER-HARD (4.5X9X1MM THK)	
	5	1,2,4,5	**8T-4896**	29	WASHER-HARD (10.2X18.5X2.5MM THK)	
	6	1,4,5	**5S-7379**	8	BOLT (3/8-16X0.875 IN)	
B	7	1,2,3, 4,5	**9X-6772**	149	STRAP-CABLE	
	8	1,2,4,5	**4P-7581**	29	CLIP	
	9	2,4,5	**5M-3062**	10	BOLT (3/8-16X0.75 IN)	
	10	1,2,4,5	**4P-8134**	12	CLIP	
	11	5	**5P-8167**	1	BOLT (3/8-16X0.625 IN)	
	12	1	**106-8491**	1	HARNESS AS-ENGINE	
	13	4	**113-4316**	1	PLATE AS	
	14	4	**6C-3680**	6	RIVET-POP	
	15	4	**109-1645**	3	CLIP	
	16	5	**7T-9982**	1	CABLE AS	
E		5	**5P-0761**		CABLE (00GA)(RED) (160CM)	
		5	**1S-7251**	1	TERMINAL-RING (FOR 1/2 IN BOLT)	
		5	**8N-0869**	1	COVER-TERMINAL (RED)	
E		5	**5P-0695**		CONDUIT (142CM)	
		5	**1S-4915**	2	LINER-CONDUIT	
BE		5	**8T-2225**		TUBE-HEAT SHRINK	
		5	**3S-2093**	1	STRAP-CABLE	
	17	5	**8N-1725**	1	COVER-TERMINAL (RED)	
	18	4	**128-2976**	1	HARNESS AS	
	19	1,2,3, 4,5	**4P-7429**	7	CLIP	
	20	2	**1A-2029**	1	BOLT (3/8-16X1.125 IN)	
Y	21	2	**134-2252**	1	SENSOR GP-TEMPERATURE (POWERTRAIN OIL)	470
	22	2	**2P-8421**	1	ADAPTER-O-RING	
	23	2,5	**3J-1907**	4	SEAL-O-RING	
	24	2	**3K-6060**	2	LOCKNUT (3/8-16 THD)	
	25	2,4	**6V-8801**	11	NUT (3/8-16 THD)	
	26	2	**7X-0291**	2	BOLT (3/8-16X3.75 IN)	
	27	2	**123-6449**	1	WARNING GP-BACKUP	
		2	**3E-3365**	1	WEDGE-RECEPTACLE LOCK (2 PIN)	
		2	**8T-8729**	2	PIN-CONNECTOR	
		2	**102-8802**	1	KIT-RECEPTACLE (2 PIN)	
					(INCLUDES RECEPTACLE & WEDGE)	
	28	5	**3K-0360**	1	SEAL-O-RING	
	29	2,4	**7G-1060**	4	STRAP AS-GROUND	
	30	3	**109-5745**	1	HARNESS AS-RH FENDER	
	31	3	**109-5746**	1	HARNESS AS-LH FENDER	
Y	32	3	**124-9325**	1	SENSOR GP-FUEL LEVEL (ULTRASONIC)	445
	33	3	**8T-2501**	4	BOLT (3/8-16X2 IN)	
	34	4	**6S-4039**	2	GROMMET	

109-5749 BATTERY & WIRING GP *(contd.)* i01749391

NOTE	REF NO	GRAPHIC REF	PART NUMBER	QTY	PART NAME 1 2 3 4 5 6 (PRODUCT LEVEL)	SEE PAGE
	35	3	**5P-1075**	4	WASHER-HARD (10.2X22.5X3MM THK)	
	36	1	**7T-0266**	1	BRACKET AS	
		1	**1F-0750**	1	NUT-WELD (3/8-16 THD)	
	37	1	**8T-2502**	1	BOLT (3/8-16X1.125 IN)	
	38	1,5	**4L-6454**	5	BOLT (3/8-16X1 IN)	
	39	4	**2D-1290**	1	GROMMET	
	40	4	**6Y-6584**	1	STRAP AS-GROUND	
	41	4,5	**6V-8188**	3	NUT (1/2-13 THD)	
	42	2,4,5	**8T-4223**	5	WASHER-HARD (13.5X25.5X3MM THK)	
Y	43	5	**164-7577**	1	SWITCH GP-BYPASS (POWERTRAIN FILTER PRESSURE)	498
	44	5	**3E-9350**	1	SWITCH AS-TEMPERATURE (FILTER BYPASS)	
		5	**3E-3365**	1	WEDGE-RECEPTACLE LOCK (2 PIN)	
		5	**8T-8729**	2	PIN-CONNECTOR	
		5	**102-8802**	1	KIT-RECEPTACLE (2 PIN)	
					(INCLUDES RECEPTACLE & WEDGE)	
	45	5	**8N-1825**	1	RECEPTACLE AS	
		5	**1S-7251**	2	TERMINAL-RING (FOR 1/2 IN BOLT)	
E		5	**5P-0747**		CABLE (00GA)(BLACK) (156CM)	
E		5	**5P-0761**		CABLE (00GA)(RED) (153CM)	
		5	**1S-4915**	2	LINER-CONDUIT	
BE		5	**8T-2225**		TUBE-HEAT SHRINK	
E		5	**5P-0695**		CONDUIT (127CM)	
	46	5	**8S-4211**	2	PLATE	
Y	47	5	**7N-0719**	1	SWITCH GP-DISCONNECT (BATTERY)	499
	48	5	**9W-2938**	1	COVER AS	
	49	5	**4D-6716**	3	RIVET-POP	
	50	5	**5C-6565**	2	BOLT (1/2-13X1.125 IN)	
	51	2	**8V-0622**	1	CABLE AS	
		2	**1M-6119**	2	BOLT-BATTERY TERMINAL (5/16-18X1.375 IN)	
		2	**1M-6120**	2	NUT-BATTERY TERMINAL (5/16-18 THD)	
E		2	**5P-0761**		CABLE (00GA)(RED) (14CM)	
		2	**9G-0003**	1	COVER-TERMINAL (BLACK)	
		2	**9G-0004**	1	COVER-TERMINAL (RED)	
		2	**8C-5917**	1	TERMINAL AS-BATTERY (POSITIVE)	
		2	**8T-9757**	1	TERMINAL AS-BATTERY (NEGATIVE)	
CY	52	2	**193-2550**	1	SENSOR GP-SPEED (ODOMETER)	467
	53	5	**7G-0535**	1	CABLE AS	
E		5	**5P-0747**		CABLE (00GA)(BLACK) (150CM)	
		5	**7N-5274**	1	COVER-TERMINAL (BLACK)	
		5	**3S-2093**	1	STRAP-CABLE	
BE		5	**5P-0695**		CONDUIT	
BE		5	**8T-2225**		TUBE-HEAT SHRINK	
		5	**1S-4915**	2	LINER-CONDUIT	
		5	**3S-6050**	1	TERMINAL AS-BATTERY (NEGATIVE)	
		5	**1M-6119**	1	BOLT-BATTERY TERMINAL (5/16-18X1.375 IN)	
		5	**1M-6120**	1	NUT-BATTERY TERMINAL (5/16-18 THD)	
	54	5	**9G-8909**	1	COVER-TERMINAL (BLACK)	
		5	**1S-7252**	1	TERMINAL-RING (FOR 3/8 IN BOLT)	
	55	5	**5T-4502**	1	CABLE AS	
E		5	**5P-0747**		CABLE (00GA)(BLACK) (115CM)	
	56	5	**1S-7252**	1	TERMINAL-RING (FOR 3/8 IN BOLT)	
		5	**9G-8909**	1	COVER-TERMINAL (BLACK)	
	57	5	**1S-7251**	1	TERMINAL-RING (FOR 1/2 IN BOLT)	
	58	5	**7T-7777**	1	CABLE AS	
E		5	**5P-0761**		CABLE (00GA)(RED) (109CM)	
		5	**1S-7251**	2	TERMINAL-RING (FOR 1/2 IN BOLT)	
		5	**8N-0869**	2	COVER-TERMINAL (RED)	
E		5	**5P-0695**		CONDUIT (86CM)	
		5	**1S-4915**	2	LINER-CONDUIT	

109-5749 **BATTERY & WIRING GP** *(contd.)* **i01749391**

NOTE	REF NO	GRAPHIC REF	PART NUMBER	QTY	PART NAME 1 2 3 4 5 6 (PRODUCT LEVEL)	SEE PAGE
E		5	**8T-2225**		TUBE-HEAT SHRINK	
	59	2	**3D-2824**	1	SEAL-O-RING	
	60	2	**8T-0151**	1	ADAPTER	
	61	5	**061-7278**	1	CABLE AS	
		5	**5P-0747**		CABLE (00GA)(BLACK) (53CM)	
		5	**1S-7251**	1	TERMINAL-RING (FOR 1/2 IN BOLT)	
	62	4	**5P-6887**	1	GROMMET	
	63	3	**111-4402**	1	FILTER-FOAM	
	64	3	**3E-7753**	1	FLOAT AS	
	65	3	**6V-5051**	1	SEAL-O-RING	
	66	2,3	**7B-1251**	6	GROMMET	
	67	3	**8T-8908**	1	BOLT (1/4-20X1 IN)	
	68	3	**8T-4205**	1	WASHER-HARD (7.2X14.5X2MM THK)	
	69	3	**3E-5239**	1	RELAY AS (24 VOLT)	
	70	4,5	**4P-7428**	2	CLIP	
	71	5	**3T-9549**	1	ADAPTER	
	72	5	**2S-4078**	1	SEAL-O-RING	
	73	4	**148-9652**	1	PLUG AS-AIR CONDITIONER	
Y	74	2	**118-7226**	1	SENSOR GP-TEMPERATURE (BRAKE OIL)	469
D	75	2	**5P-6025**		LOCKWIRE (.1M)	
Y	76	5	**134-2252**	1	SENSOR GP-TEMPERATURE (HYDRAULIC OIL)	470
	77	2,4	**118-6365**	2	PLATE AS	
					(EACH INCLUDES)	
		2,4	**6V-6716**	2	RIVET-TRUSS HEAD	
		2,4	**109-1645**	1	CLIP	
	78	5	**8S-2634**	1	COVER AS	
		5	**2P-2975**	2	SEAL-O-RING	
C	79	2	**153-6281**	1	HOLD DOWN AS	
	80	2	**9X-9730**	2	BATTERY (12 VOLT)	
					(EACH INCLUDES)	
		2	**7N-0060**	6	VENT AS	
Y	81	5	*9W-0742*	1	JUNCTION BLOCK GP	413
	82	5	**4L-9337**	1	BOLT (3/8-16X1.5 IN)	

B-USE AS REQUIRED
C-CHANGE FROM PREVIOUS TYPE
D-ORDER BY THE METER
E-ORDER BY THE CENTIMETER
M-METRIC PART
Y-SEPARATE ILLUSTRATION

109-5749 **BATTERY & WIRING GP** *(contd.)* **i01749391**

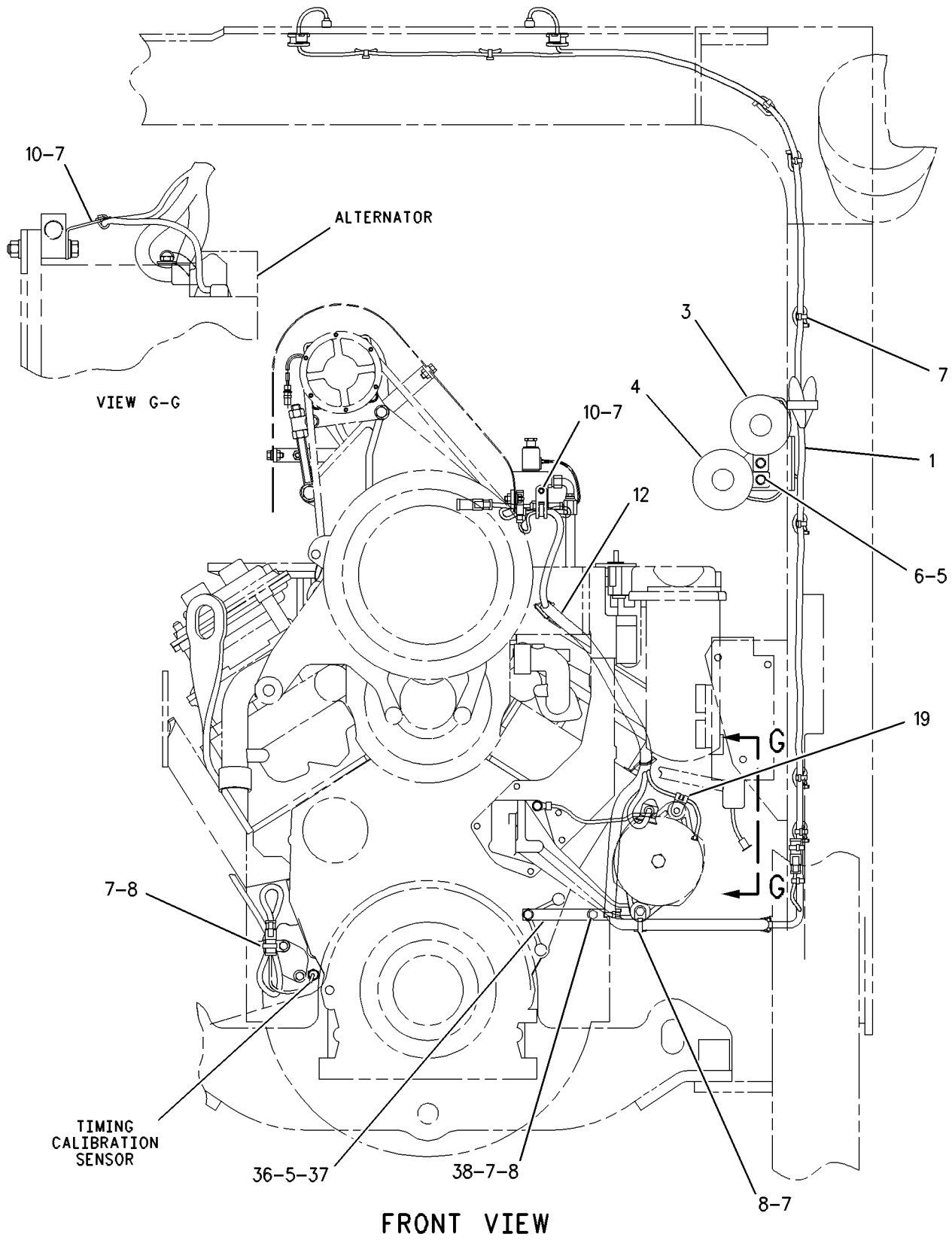

GRAPHIC #1 g00649187

109-5749 **BATTERY & WIRING GP** *(contd.)* **i01749391**

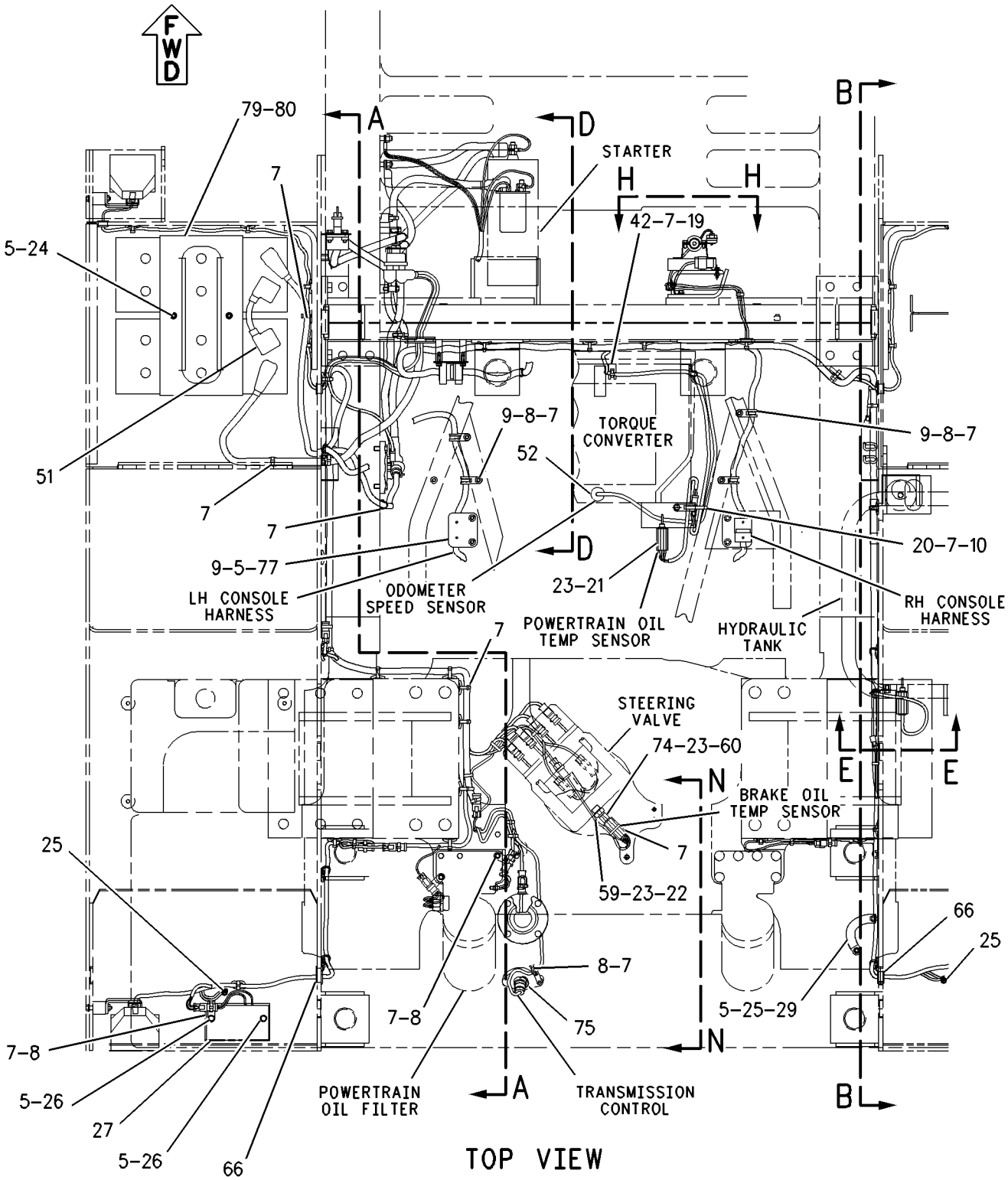

REFER TO ALL ILLUSTRATIONS OF THIS GROUP FOR AUXILIARY VIEWS

GRAPHIC #2 g00746257

109-5749 **BATTERY & WIRING GP** ***(contd.)*** **i01749391**

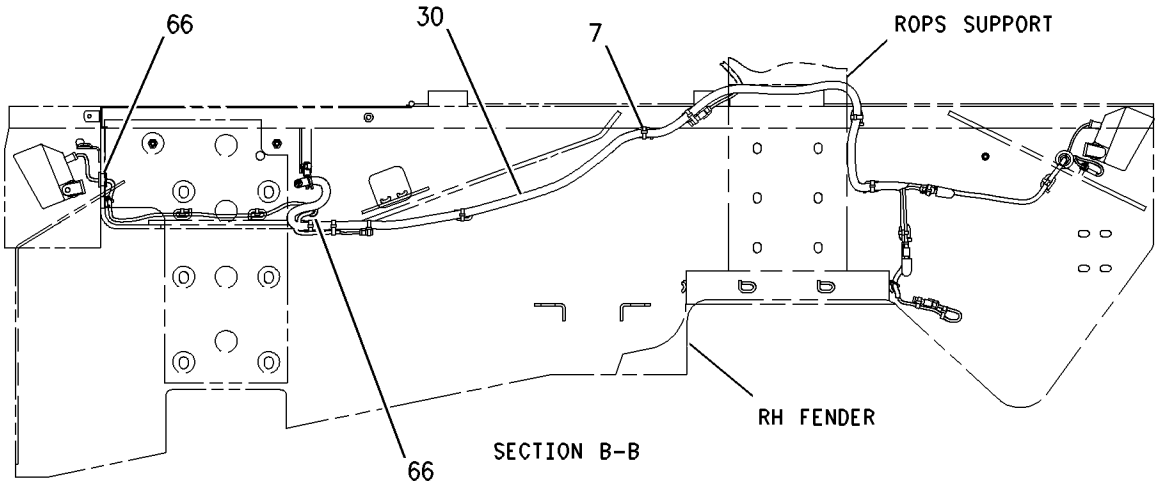

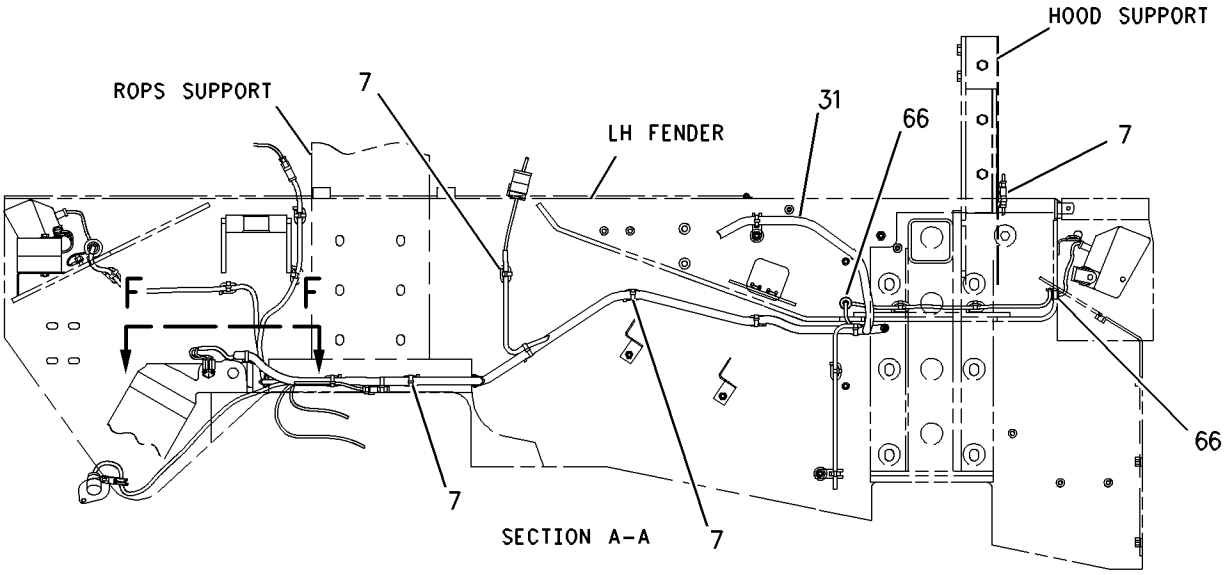

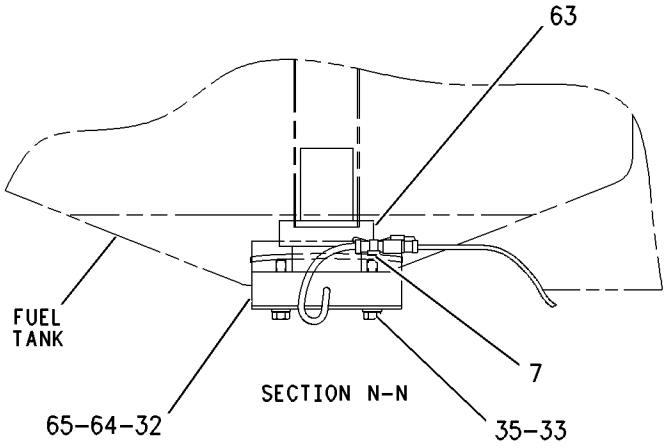

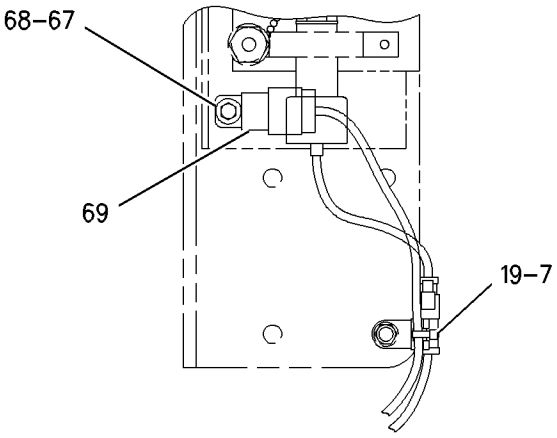

REFER TO ALL ILLUSTRATIONS OF THIS GROUP FOR AUXILIARY VIEWS

GRAPHIC #3 g00738150

109-5749 **BATTERY & WIRING GP** *(contd.)* **i01749391**

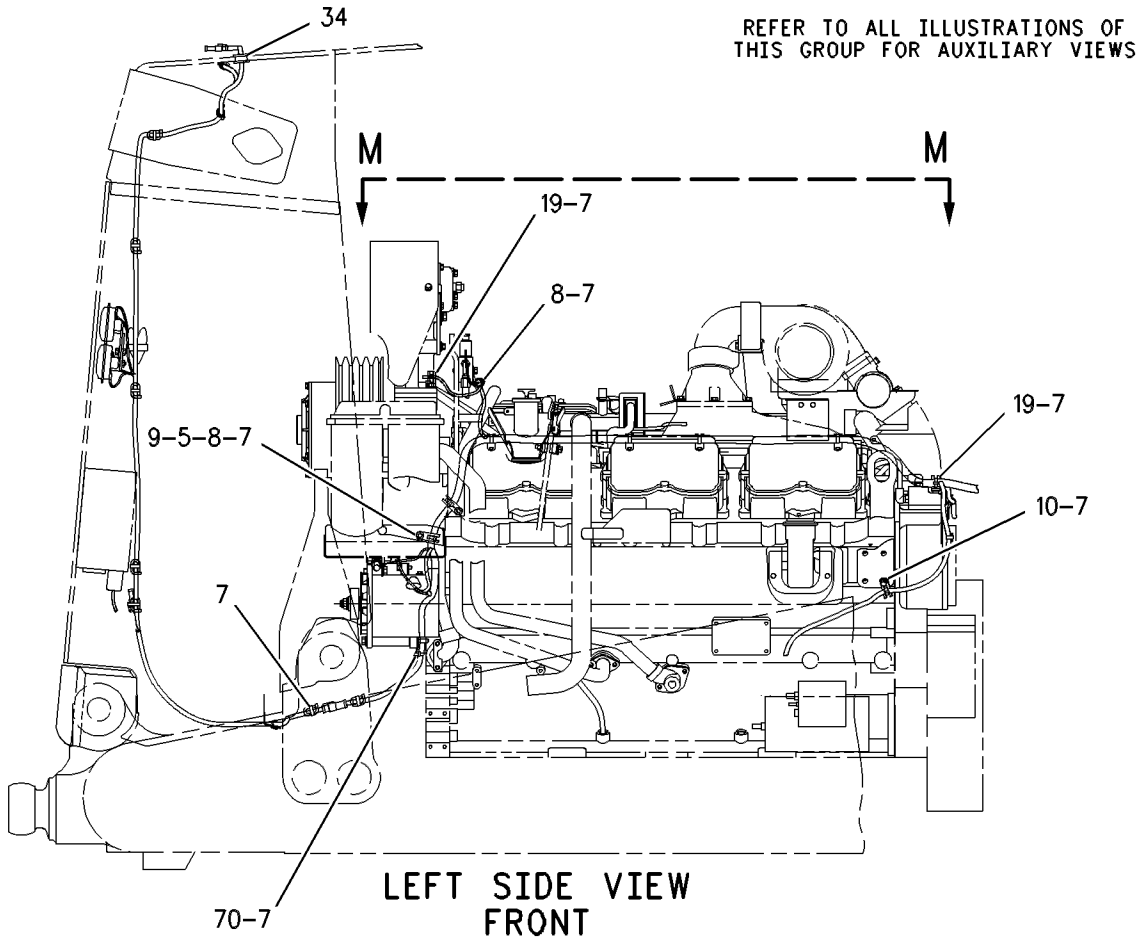

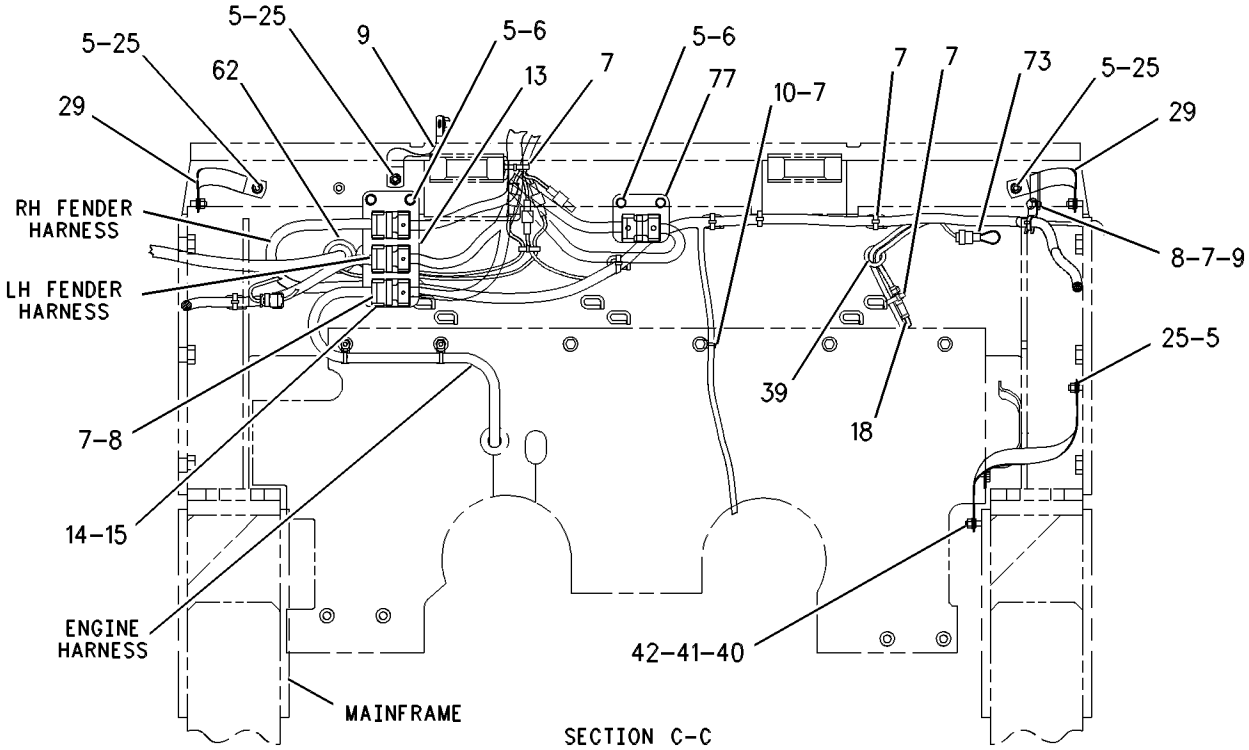

GRAPHIC #4 g00649190

109-5749 **BATTERY & WIRING GP** *(contd.)* **i01749391**

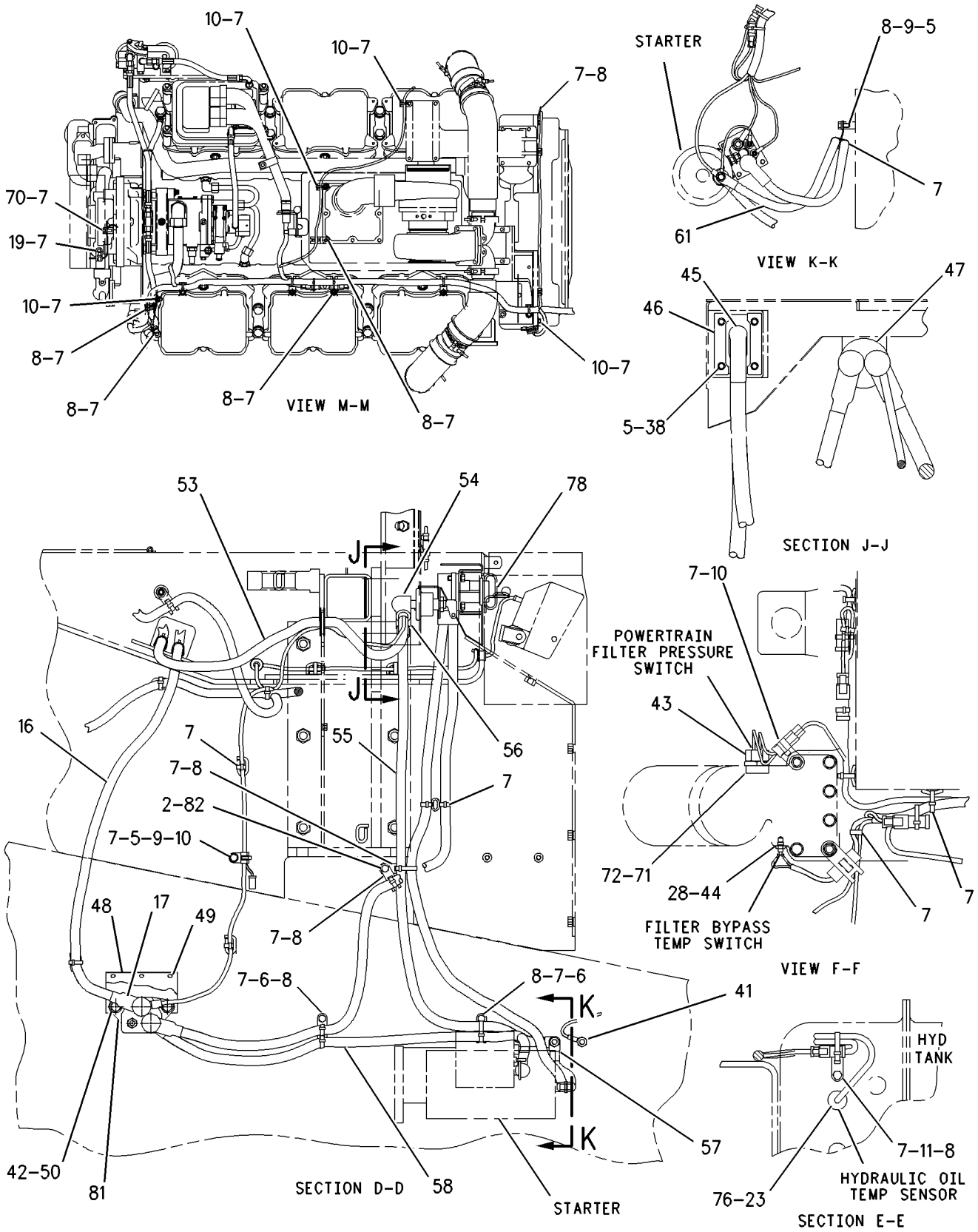

GRAPHIC #5 g00712712

ELECTRICAL AND STARTING SYSTEM

115-7413 CONTROL & MTG GP-ELECTRONIC

S/N: 3KR1-1177

SMCS-1901 **i01741408**

NOTE	REF NO	GRAPHIC REF	PART NUMBER	QTY	PART NAME 1 2 3 4 5 6 (PRODUCT LEVEL)	SEE PAGE
	1	1	**6I-1418**	4	SPACER (8.2X12.7X28.7MM THK)	
	2	1	**8T-9655**	8	MOUNT (ISOLATION)	
Y	3	1	**142-3363**	1	CONTROL GP-UNPROGRAMMED	392
	4	1	**8T-4224**	1	WASHER-HARD (8.8X16X2MM THK)	
	5	1	**9N-0869**	4	WASHER-HARD (8.8X25.5X2MM THK)	
M	6	1	**7X-0818**	4	BOLT (M8X1.25X45MM)	

M-METRIC PART
Y-SEPARATE ILLUSTRATION

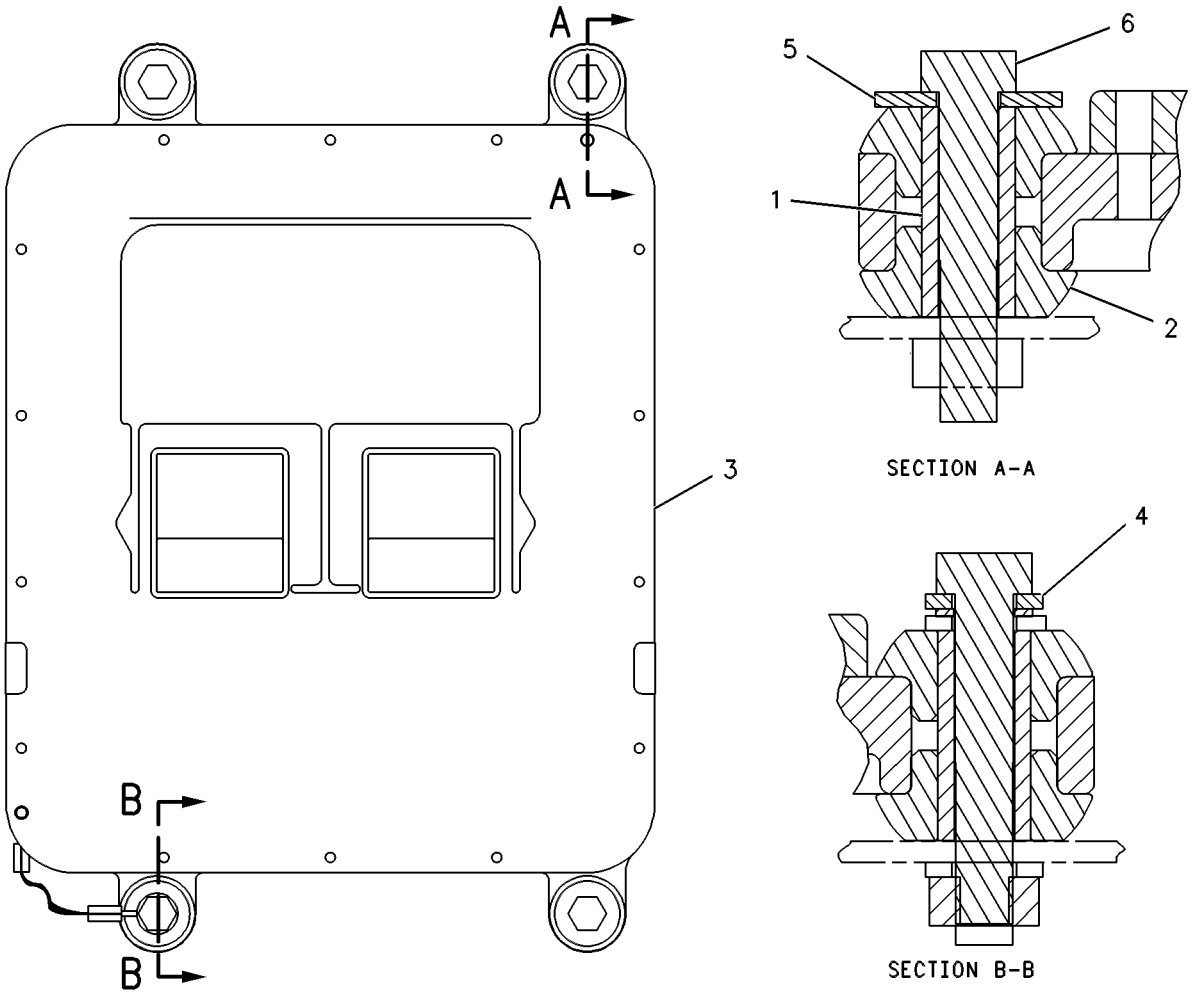

GRAPHIC #1 g00258550

ELECTRICAL AND STARTING SYSTEM

158-8077 CONTROL & MTG GP-ELECTRONIC

S/N: 3KR1178-UP

SMCS-1901 **i01741412**

NOTE	REF NO	GRAPHIC REF	PART NUMBER	QTY	PART NAME 1 2 3 4 5 6 (PRODUCT LEVEL)	SEE PAGE
	1	1	**6I-1418**	4	SPACER (8.2X12.7X28.7MM THK)	
	2	1	**8T-9655**	8	MOUNT (ISOLATION)	
Y	3	1	**160-1758**	1	CONTROL GP-UNPROGRAMMED	393
	4	1	**8T-4224**	1	WASHER-HARD (8.8X16X2MM THK)	
	5	1	**9N-0869**	4	WASHER-HARD (8.8X25.5X2MM THK)	
M	6	1	**7X-0818**	4	BOLT (M8X1.25X45MM)	

M-METRIC PART
Y-SEPARATE ILLUSTRATION

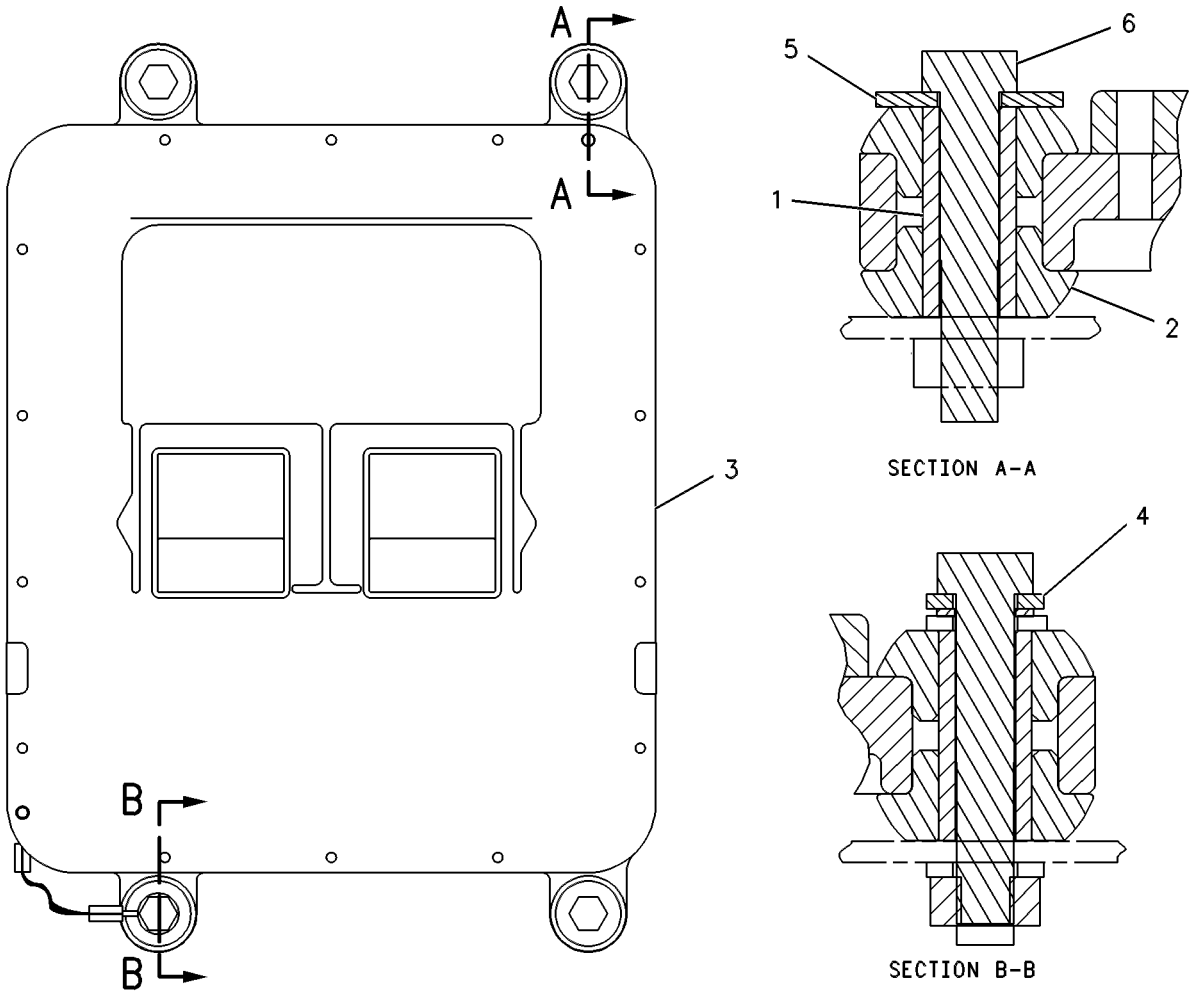

GRAPHIC #1 g00258550

ELECTRICAL AND STARTING SYSTEM

158-8077 CONTROL & MTG GP-ELECTRONIC

S/N: 3KR926-UP

SMCS-1901 **i01741413**

NOTE	REF NO	GRAPHIC REF	PART NUMBER	QTY	PART NAME 1 2 3 4 5 6 (PRODUCT LEVEL)	SEE PAGE
	1	1	**6I-1418**	4	SPACER (8.2X12.7X28.7MM THK)	
	2	1	**8T-9655**	8	MOUNT (ISOLATION)	
CY	3	1	**172-9389**	1	CONTROL GP-UNPROGRAMMED	394
	4	1	**8T-4224**	1	WASHER-HARD (8.8X16X2MM THK)	
	5	1	**9N-0869**	4	WASHER-HARD (8.8X25.5X2MM THK)	
M	6	1	**7X-0818**	4	BOLT (M8X1.25X45MM)	

C-CHANGE FROM PREVIOUS TYPE
M-METRIC PART
Y-SEPARATE ILLUSTRATION

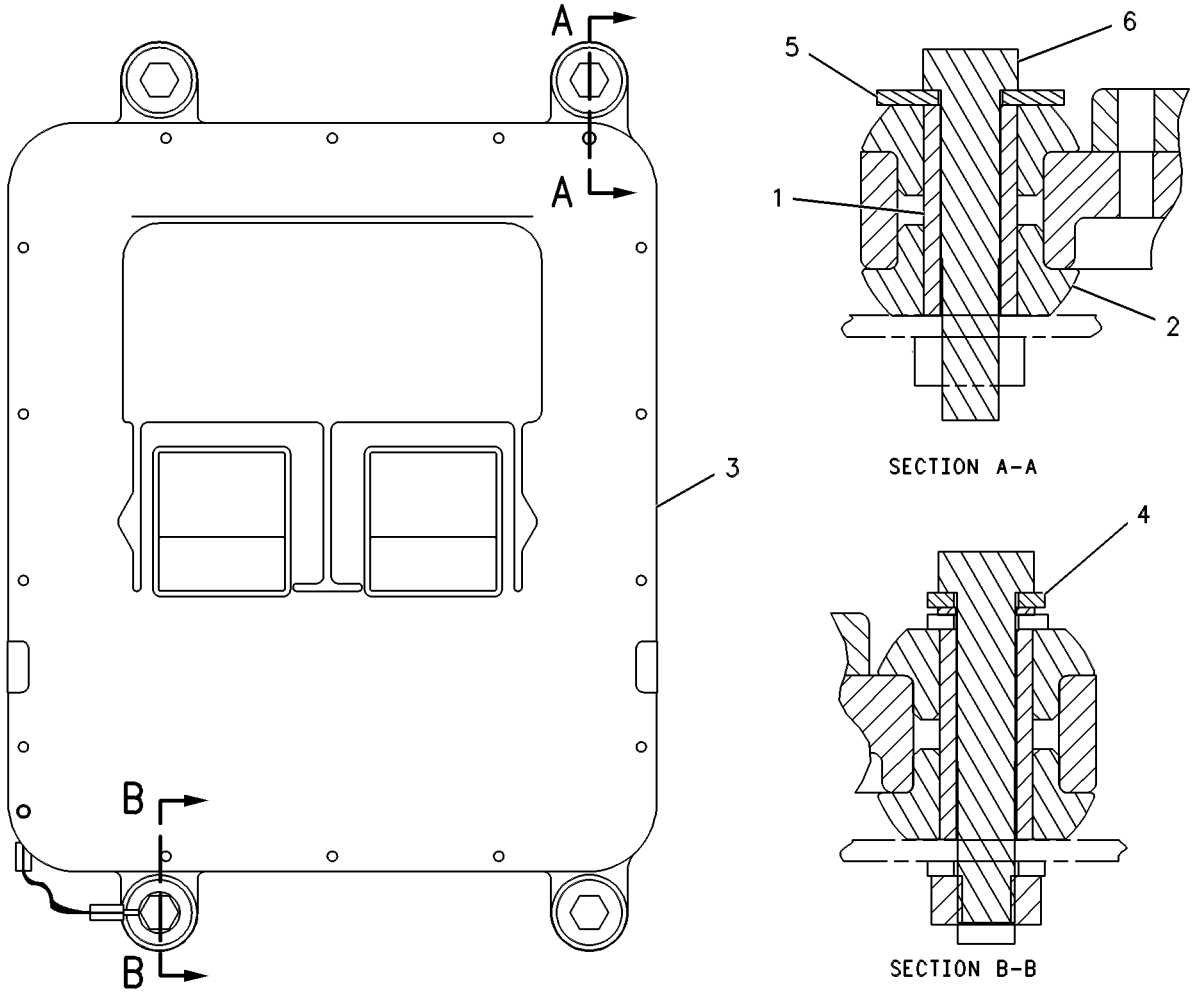

GRAPHIC #1 g00258550

109-0400 CONTROL & MTG GP-ENGINE ELEK

S/N: 80M1-2354
PART OF 115-7641, 135-7810, 155-0058 ENGINE AR
ALSO AN ATTACHMENT

SMCS-1901 **i01638087**

NOTE	REF NO	GRAPHIC REF	PART NUMBER	QTY	PART NAME 1 2 3 4 5 6 (PRODUCT LEVEL)	SEE PAGE
Y	1	1	*156-7172*	1	CONTROL GP-ENGINE ELECTRONIC	389
	2	1	**115-6469**	4	SPACER	
	3	1	**8H-8769**	4	BOLT (5/16-18X4.25 IN)	
	4	1	**9M-1974**	1	WASHER-HARD (8.8X16X2MM THK)	
	5	1	**9N-0869**	4	WASHER-HARD (8.8X25.5X2MM THK)	
	6	1	**8T-9655**	8	MOUNT (ISOLATION)	

Y-SEPARATE ILLUSTRATION

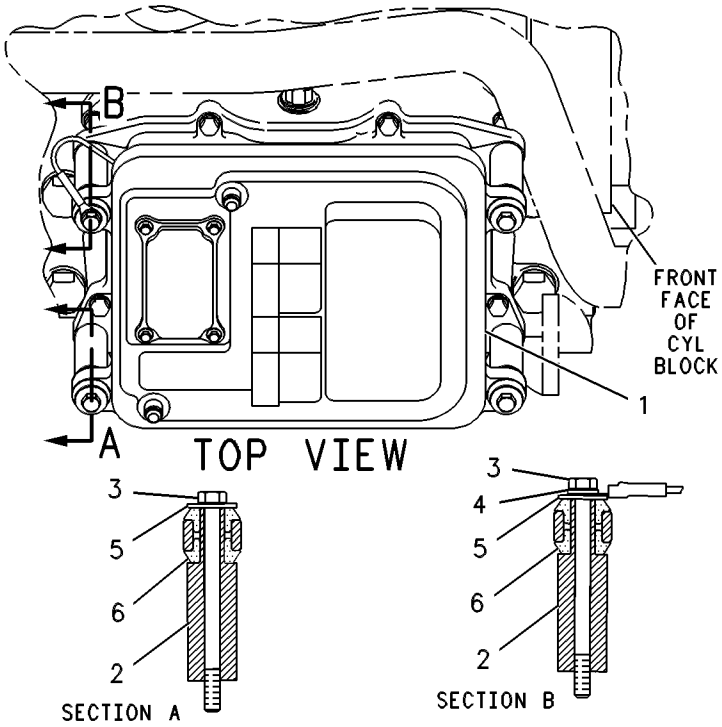

GRAPHIC #1 g00086484

ELECTRICAL AND STARTING SYSTEM

162-6823 CONTROL & MTG GP-ENGINE ELEK

S/N: 80M2355-UP
PART OF 115-7641, 135-7810, 155-0058 ENGINE AR
ALSO AN ATTACHMENT

SMCS-1901 **i01741414**

NOTE	REF NO	GRAPHIC REF	PART NUMBER	QTY	PART NAME 1 2 3 4 5 6 (PRODUCT LEVEL)	SEE PAGE
Y	1	1	*105-6122*	1	CONTROL GP-ENGINE ELECTRONIC	387
	2	1	**115-6469**	4	SPACER	
	3	1	**8H-8769**	3	BOLT (5/16-18X4.25 IN)	
	4	1	**3E-4352**	1	WASHER-HARD (8.8X20.5X2.5MM THK)	
	5	1	**9N-0869**	4	WASHER-HARD (8.8X25.5X2MM THK)	
	6	1	**8T-9655**	8	MOUNT (ISOLATION)	
	7	1	**8M-1865**	1	BOLT (5/16-18X5.75IN)	
	8	1	**4E-0724**	1	SPACER	
	9	1	**4D-7388**	1	CLIP	

Y-SEPARATE ILLUSTRATION

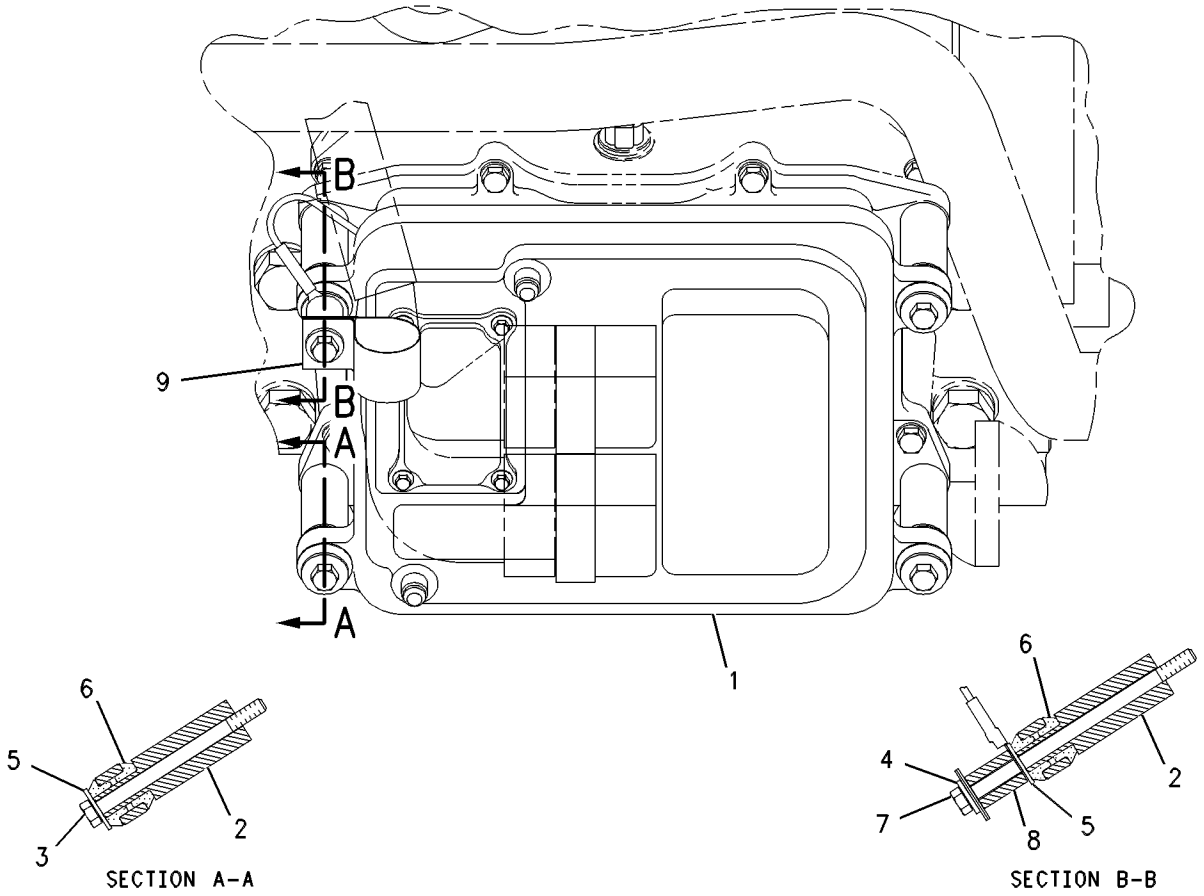

GRAPHIC #1 g00610609

ELECTRICAL AND STARTING SYSTEM

126-7525 CONTROL GP-ELECTRONIC

S/N: 80M1-114
PART OF 115-7641, 135-7810 ENGINE AR
FIELD REPLACEMENT ORDER 149-3893—PAGE 384
ALSO AN ATTACHMENT

SMCS-7490 **i00691643**

NOTE	REF NO	GRAPHIC REF	PART NUMBER	QTY	PART NAME 1 2 3 4 5 6 (PRODUCT LEVEL)	SEE PAGE
					(INDIVIDUAL PARTS ARE NOT SERVICED SEPARATELY)	

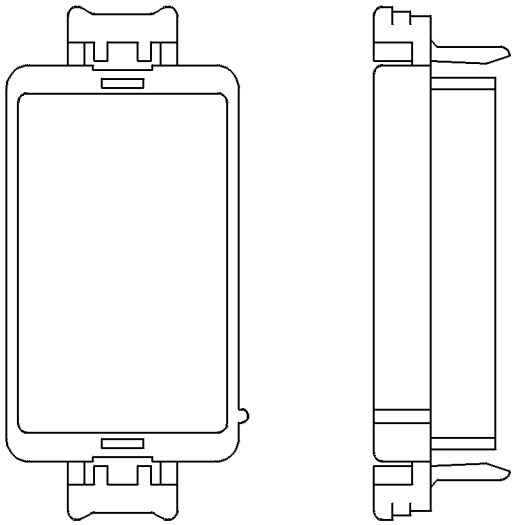

GRAPHIC #1 g00084524

126-7525 CONTROL GP-ELECTRONIC

S/N: 80M115-677
PART OF 115-7641, 135-7810 ENGINE AR
FIELD REPLACEMENT ORDER 149-3893—PAGE 384
ALSO AN ATTACHMENT

SMCS-7490 **i00604278**

NOTE	REF NO	GRAPHIC REF	PART NUMBER	QTY	PART NAME 1 2 3 4 5 6 (PRODUCT LEVEL)	SEE PAGE
					(INDIVIDUAL PARTS ARE NOT SERVICED SEPARATELY)	

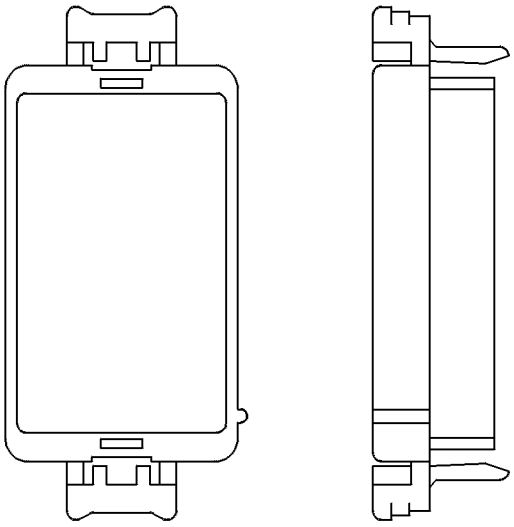

GRAPHIC #1 g00084524

ELECTRICAL AND STARTING SYSTEM

126-7525 CONTROL GP-ELECTRONIC

S/N: 80M678-UP
PART OF 115-7641, 135-7810 ENGINE AR
FIELD REPLACEMENT ORDER 149-3893—PAGE 384
ALSO AN ATTACHMENT

SMCS-7490 **i01212830**

NOTE	REF NO	GRAPHIC REF	PART NUMBER	QTY	PART NAME 1 2 3 4 5 6 (PRODUCT LEVEL)	SEE PAGE
					(NO SERVICED PARTS)	

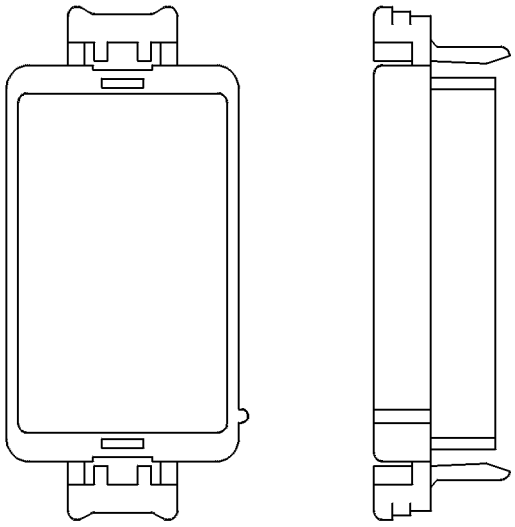

GRAPHIC #1 g00084524

ELECTRICAL AND STARTING SYSTEM

149-3893 CONTROL GP-ENG RATINGS ELEK

S/N: 80M1-UP

FIELD REPLACEMENT FOR 126-7525—PAGE 381

FIELD INSTALLATION

SMCS-1901 **i00694973**

NOTE	REF NO	GRAPHIC REF	PART NUMBER	QTY	PART NAME 1 2 3 4 5 6 (PRODUCT LEVEL)	SEE PAGE
	1	1	**3E-9199**	1	LABEL-MARKING	

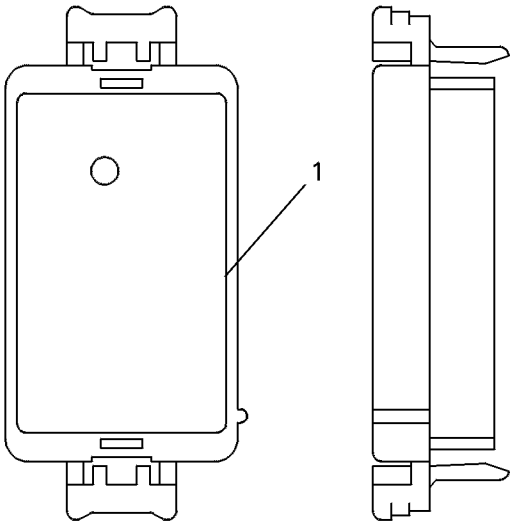

GRAPHIC #1 g00084788

ELECTRICAL AND STARTING SYSTEM

151-7075 CONTROL GP-ENG RATINGS ELEK

S/N: 3KR1-UP
FIELD INSTALLATION

SMCS-1901 **i01039950**

NOTE	PART NUMBER	QTY	PART NAME 1 2 3 4 5 6 (PRODUCT LEVEL)	SEE PAGE
			(NO SERVICED PARTS)	

<END>

154-9571 CONTROL GP-ENG RATINGS ELEK

S/N: 3KR1-UP
FIELD INSTALLATION

SMCS-1901 **i01039901**

NOTE	PART NUMBER	QTY	PART NAME 1 2 3 4 5 6 (PRODUCT LEVEL)	SEE PAGE
			(INDIVIDUAL PARTS ARE NOT SERVICED SEPARATELY)	

<END>

161-0570 CONTROL GP-ENG RATINGS ELEK

S/N: 3KR1-UP
FIELD INSTALLATION

SMCS-1901 **i01039908**

NOTE	PART NUMBER	QTY	PART NAME 1 2 3 4 5 6 (PRODUCT LEVEL)	SEE PAGE
			(NO SERVICED PARTS)	

<END>

161-4177 CONTROL GP-ENG RATINGS ELEK

S/N: 3KR1-UP

FIELD INSTALLATION

SMCS-1901 i01152557

NOTE	REF NO	GRAPHIC REF	PART NUMBER	QTY	PART NAME 1 2 3 4 5 6 (PRODUCT LEVEL)	SEE PAGE
					INDIVIDUAL PARTS NOT SERVICED SEPARATELY	

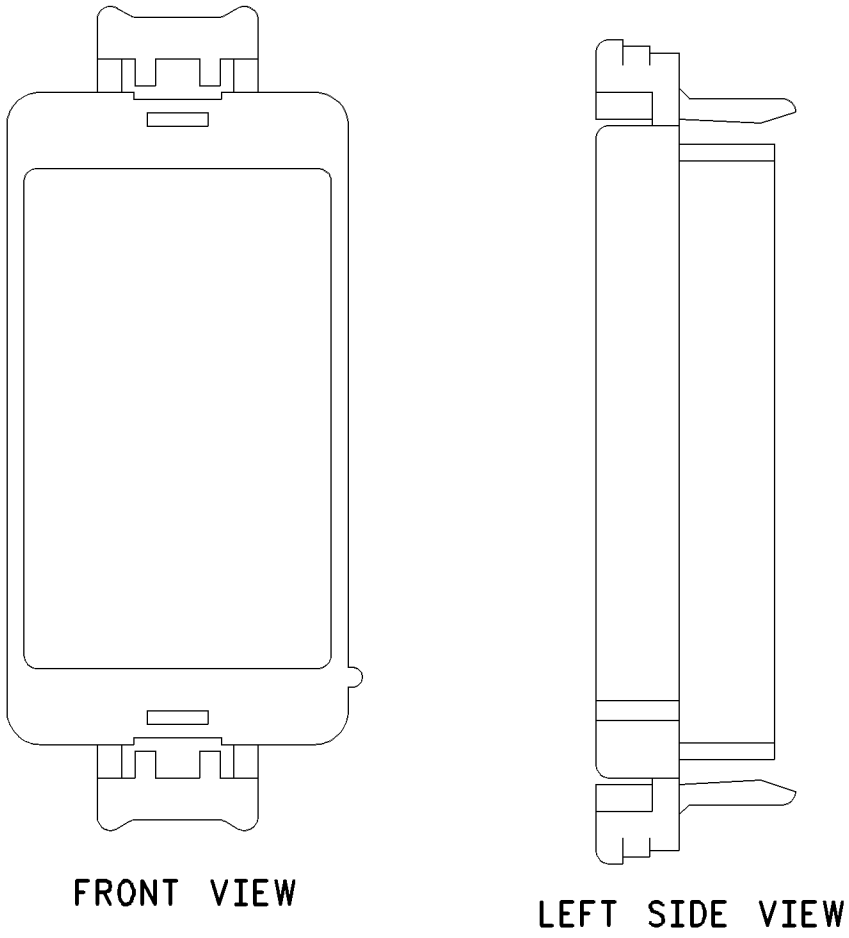

GRAPHIC #1 g00613084

105-6122 CONTROL GP-ENGINE ELECTRONIC

S/N: 80M2355-UP
ADEM-II
PART OF 162-6823 CONTROL & MTG GP-ENGINE ELEK
ALSO AN ATTACHMENT

SMCS-1901 **i01281563**

NOTE	REF NO	GRAPHIC REF	PART NUMBER	QTY	PART NAME 1 2 3 4 5 6 (PRODUCT LEVEL)	SEE PAGE
Y	1	1	**172-0802**	1	CONTROL GP-ENGINE ELECTRONIC (ADEM-II)	390

Y-SEPARATE ILLUSTRATION

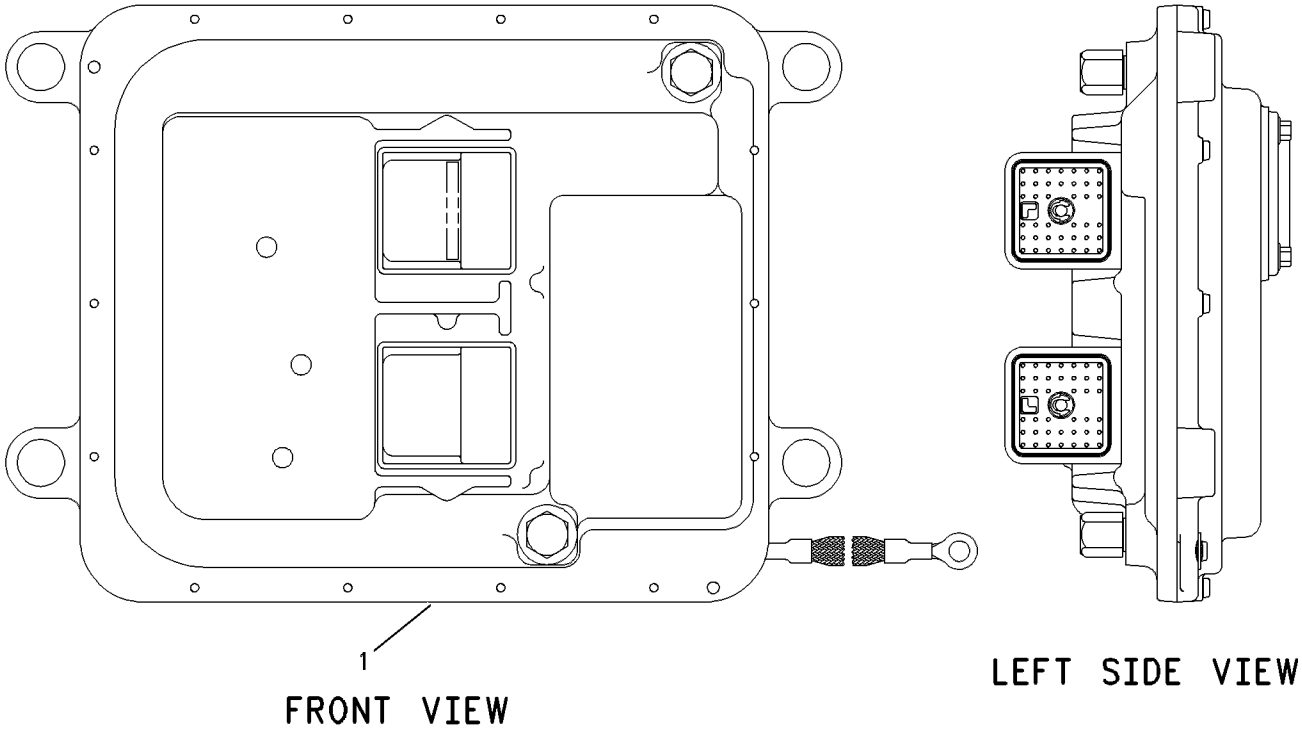

GRAPHIC #1 g00592489

133-1448 CONTROL GP-ENGINE ELECTRONIC

S/N: 80M115-UP; 3KR1-UP

FIELD INSTALLATION

SMCS-1901 **i00601447**

NOTE	REF NO	GRAPHIC REF	PART NUMBER	QTY	PART NAME 1 2 3 4 5 6 (PRODUCT LEVEL)	SEE PAGE
					(INDIVIDUAL PARTS ARE NOT SERVICED SEPARATELY)	

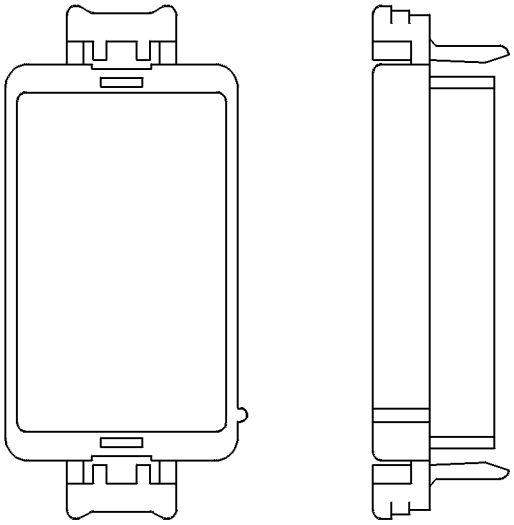

GRAPHIC #1 g00084524

156-7172 CONTROL GP-ENGINE ELECTRONIC

S/N: 80M1-2354

PART OF 109-0400 CONTROL & MTG GP-ENGINE ELEK

ALSO AN ATTACHMENT

SMCS-1901 **i01613111**

NOTE	REF NO	GRAPHIC REF	PART NUMBER	QTY	PART NAME 1 2 3 4 5 6 (PRODUCT LEVEL)	SEE PAGE
	2	1	**111-8411**	1	COVER	
	3	1	**6V-1179**	1	SEAL-O-RING	
M	4	1	**3E-6900**	4	BOLT	
	5	1	**7X-6315**	1	STRAP AS	
	6	1	**126-7574**	1	SCREW-PAN HEAD (8-32X9.52MM)	

M-METRIC PART

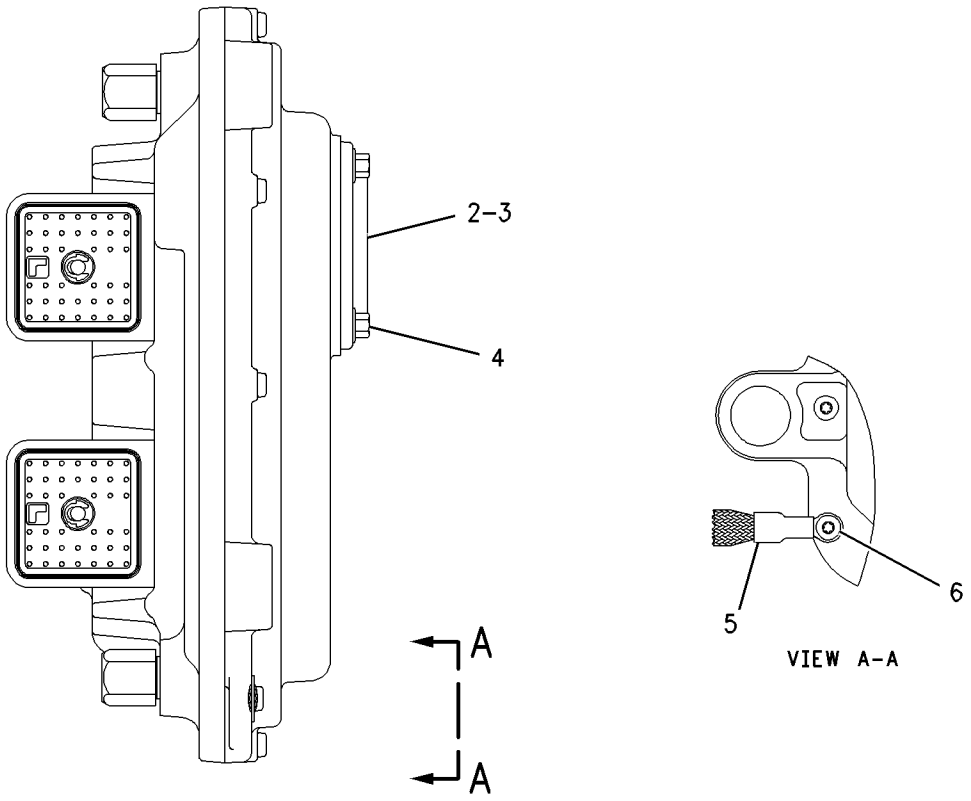

GRAPHIC #1 g00834966

172-0802 CONTROL GP-ENGINE ELECTRONIC

S/N: 80M1-UP
ADEM-II
PART OF 105-6122 CONTROL GP-ENGINE ELECTRONIC
ALSO AN ATTACHMENT

SMCS-1901 **i01446632**

NOTE	REF NO	GRAPHIC REF	PART NUMBER	QTY	PART NAME 1 2 3 4 5 6 (PRODUCT LEVEL)	SEE PAGE
	2	1	**111-8411**	1	COVER	
	3	1	**6V-1179**	1	SEAL-O-RING (76.62MM ID)	
M	4	1	**3E-6900**	4	BOLT	
	5	1	**7X-6315**	1	STRAP-GROUNDING	
	6	1	**126-7574**	1	SCREW-PAN HEAD	

M-METRIC PART

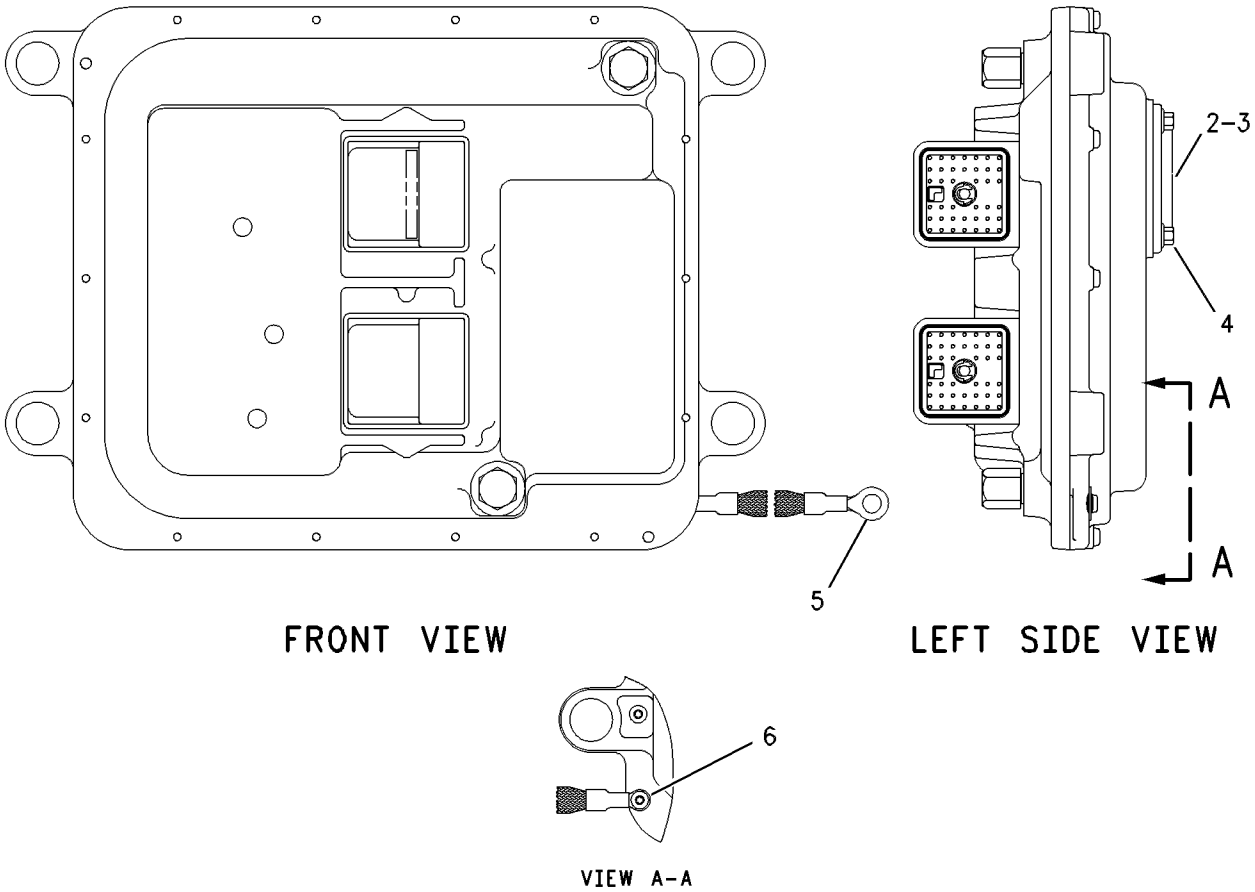

GRAPHIC #1 g00595635

152-3409 CONTROL GP-POWER TRAIN

S/N: 3KR1-1043

PART OF 134-0127 ELECTRONICS GP-POWER TRAIN

SMCS-3030 **i01070240**

NOTE	REF NO	GRAPHIC REF	PART NUMBER	QTY	PART NAME 1 2 3 4 5 6 (PRODUCT LEVEL)	SEE PAGE
Y	1	1	**142-3363**	1	CONTROL GP-UNPROGRAMMED	392
					(POWER TRAIN)(BLANK)	
		1	**152-3405**		SOFTWARE GP-POWER TRAIN	
					(SOFTWARE ONLY)	

Y-SEPARATE ILLUSTRATION

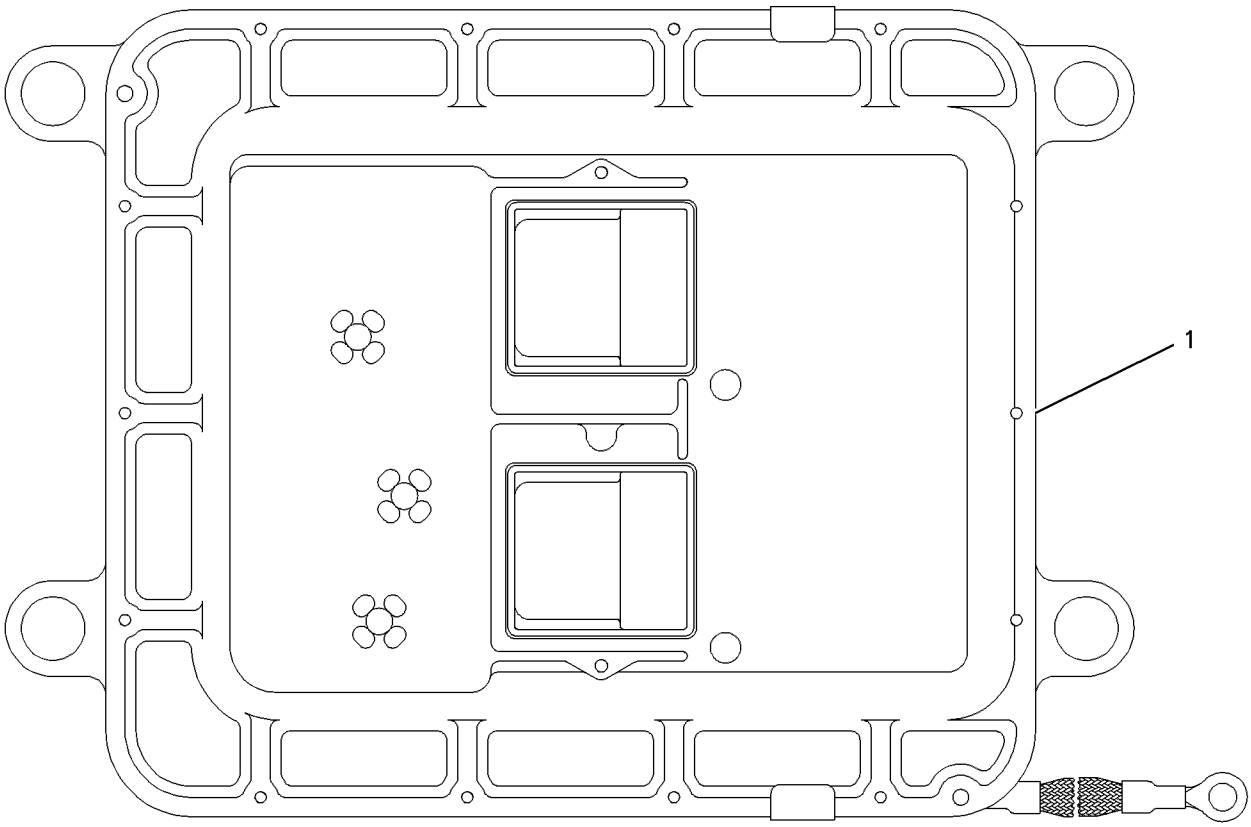

GRAPHIC #1 g00287939

ELECTRICAL AND STARTING SYSTEM

142-3363 CONTROL GP-UNPROGRAMMED

S/N: 3KR1-1177

PART OF 115-7413 CONTROL & MTG GP-ELECTRONIC, 152-3409 CONTROL GP-POWER TRAIN

SMCS-3030 **i01206409**

NOTE	REF NO	GRAPHIC REF	PART NUMBER	QTY	PART NAME 1 2 3 4 5 6 (PRODUCT LEVEL)	SEE PAGE
	1	1	**7X-6315**	1	STRAP-GROUNDING	
	2	1	**101-0852**	1	SCREW-PAN HEAD	
M	3	1	**6V-6703**	2	KIT-RETAINING BOLT	
					(EACH INCLUDES BOLT, RING, AND SEALS)	
					FOR SOFTWARE, SEE ELECTRONICS GP	

M-METRIC PART

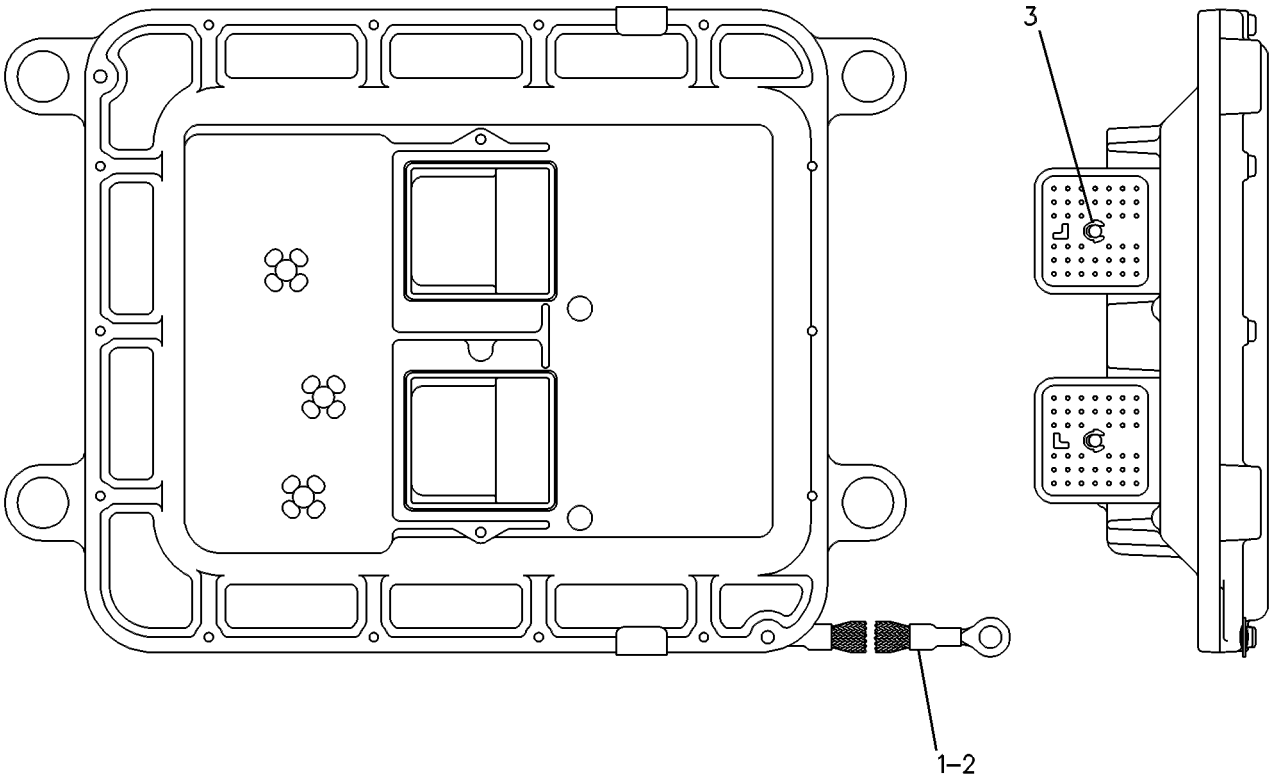

GRAPHIC #1 g00087166

160-1758 CONTROL GP-UNPROGRAMMED

S/N: 3KR1178-UP

POWER TRAIN

PART OF 158-8077 CONTROL & MTG GP-ELECTRONIC

SMCS-3030 **i01178642**

NOTE	REF NO	GRAPHIC REF	PART NUMBER	QTY	PART NAME 1 2 3 4 5 6 (PRODUCT LEVEL)	SEE PAGE
	1	1	**7X-6315**	1	STRAP-GROUNDING	
	2	1	**101-0852**	1	SCREW-PAN HEAD	
M	3	1	**6V-6703**	2	KIT-RETAINING BOLT	
					(EACH INCLUDES BOLT, RING, AND SEALS)	
					FOR SOFTWARE, SEE ELECTRONICS GP	

M-METRIC PART

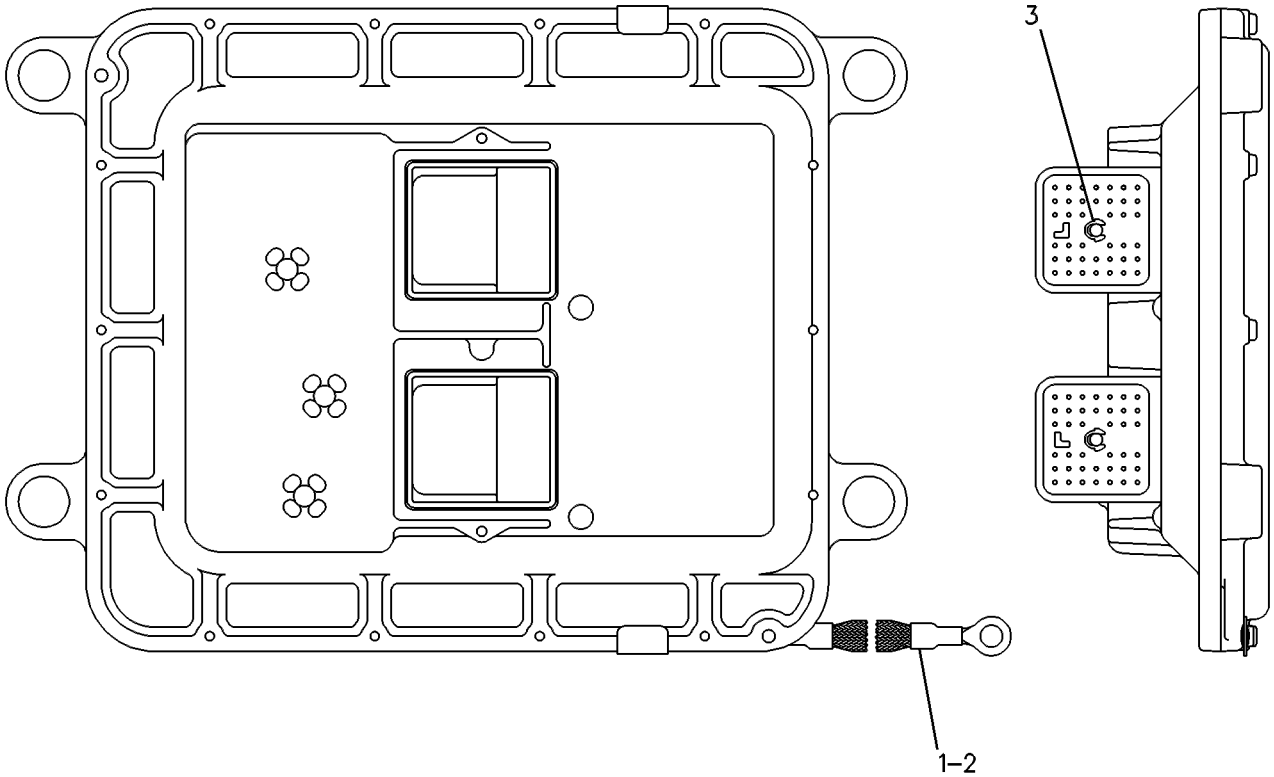

GRAPHIC #1 g00087166

ELECTRICAL AND STARTING SYSTEM

172-9389 CONTROL GP-UNPROGRAMMED—POWER TRAIN

S/N: 3KR1-UP

PART OF 158-8077 CONTROL & MTG GP-ELECTRONIC, 194-1586 SERVICE GP-POWER TRAIN

SMCS-3030 **i01747019**

NOTE	REF NO	GRAPHIC REF	PART NUMBER	QTY	PART NAME 1 2 3 4 5 6 (PRODUCT LEVEL)	SEE PAGE
	1	1	**7X-6315**	1	STRAP AS-GROUND	
	2	1	**101-0852**	1	SCREW-PAN HEAD (NO 8 X 3/8 IN)	
M	3	1	**6V-6703**	2	KIT-RETAINING BOLT	
					(EACH INCLUDES BOLT, RING, AND SEALS)	
					FOR SOFTWARE, SEE ELECTRONICS GP	

M-METRIC PART

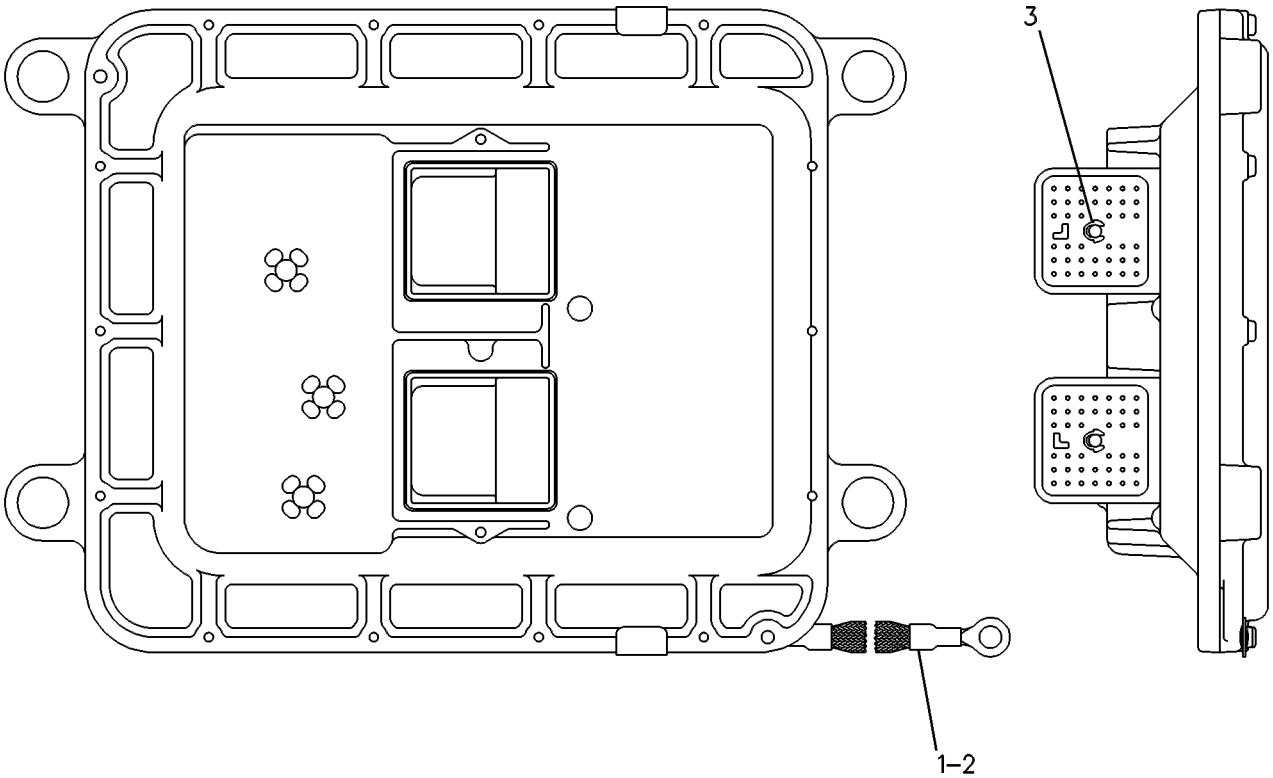

GRAPHIC #1 g00087166

ELECTRICAL AND STARTING SYSTEM

102-0685 CONVERTER GP-ELECTRICAL

S/N: 3KR1-UP
24 VOLTS TO 12 VOLTS
PART OF 112-2895 CAB AR
AN ATTACHMENT

SMCS-1421 **i01580035**

NOTE	REF NO	GRAPHIC REF	PART NUMBER	QTY	PART NAME 1 2 3 4 5 6 (PRODUCT LEVEL)	SEE PAGE
	1	1	**205-4285**	1	CONVERTER GP-ELECTRICAL	
	2	1	**9X-2498**	2	SCREW-HEX FLANGE (10-24X0.5 IN)	

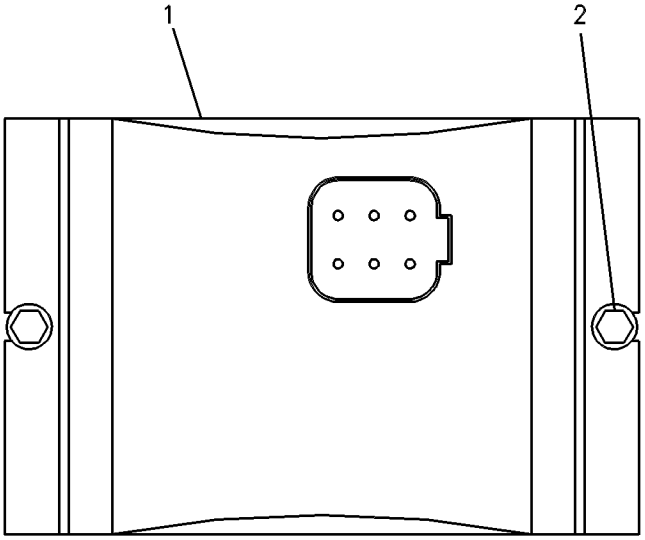

TOP VIEW

GRAPHIC #1 g00248612

134-0127 ELECTRONICS GP-POWER TRAIN

S/N: 3KR1-1043

PART OF 134-0126 ELECTRONICS AR-MACHINE

SMCS-1400, 4808, 4812, 4820 **i01204824**

NOTE	PART NUMBER	QTY	PART NAME 1 2 3 4 5 6 (PRODUCT LEVEL)	SEE PAGE
	152-3405	1	SOFTWARE GP-POWER TRAIN (SOFTWARE ONLY)	
			—OR—	
Y	**152-3409**	1	CONTROL GP-POWER TRAIN (INCLUDES SOFTWARE)	391
			(OPTIONAL SERVICE REPLACEMENT)	

Y-SEPARATE ILLUSTRATION

<END>

145-8934 ELECTRONICS GP-POWER TRAIN

S/N: 3KR1044-UP

PART OF 134-0126 ELECTRONICS AR-MACHINE

SMCS-1400, 4808, 4812, 4820 **i01443041**

NOTE	PART NUMBER	QTY	PART NAME 1 2 3 4 5 6 (PRODUCT LEVEL)	SEE PAGE
	183-7424	1	SOFTWARE GP-POWER TRAIN (SOFTWARE ONLY)	
			—OR—	
Y	**194-1586**	1	SERVICE GP-POWER TRAIN (INCLUDES SOFTWARE)	471
			(OPTIONAL SERVICE REPLACEMENT)	

Y-SEPARATE ILLUSTRATION

<END>

109-2377 FASTENER AR-DISCONNECT KEY

S/N: 3KR1-UP
PART OF 130-3867 MACHINE AR-COLD WEATHER
AN ATTACHMENT

SMCS-1411 **i00598287**

NOTE	REF NO	GRAPHIC REF	PART NUMBER	QTY	PART NAME 1 2 3 4 5 6 (PRODUCT LEVEL)	SEE PAGE
	1	1	**5P-7958**	1	SLEEVE-CABLE SPLICE	
	2	1	**5P-7957**	1	LANYARD	

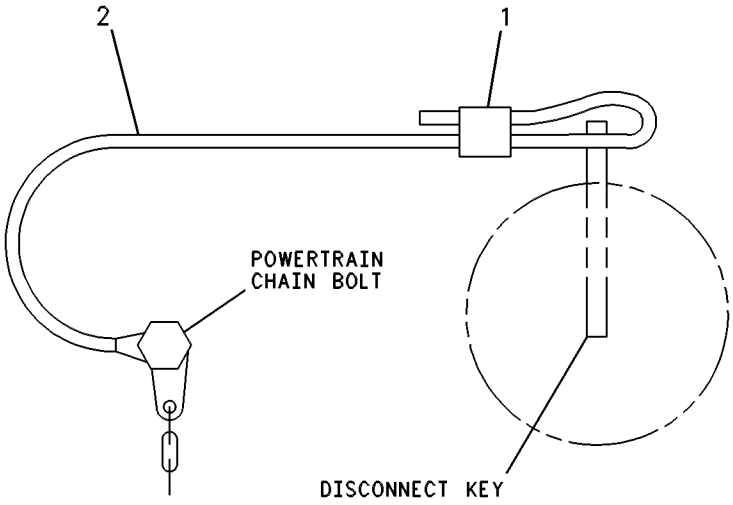

GRAPHIC #1 g00249563

ELECTRICAL AND STARTING SYSTEM

135-3210 HEATER GP-COOLANT

S/N: 3KR1-UP
PART OF 130-9720 HEATER AR
AN ATTACHMENT
TYPE 1

SMCS-1383 **i01401028**

NOTE	REF NO	GRAPHIC REF	PART NUMBER	QTY	PART NAME 1 2 3 4 5 6 (PRODUCT LEVEL)	SEE PAGE
	1	2	*122-6037*	1	HEATER GP	
		2	**123-0932**	1	FUSE	
		2	**123-0941**	1	SENSOR-TEMPERATURE	
		2	**123-0944**	1	PUMP-COOLANT	
	2	1	**5M-3062**	2	BOLT (3/8-16X.75 IN)	
	3	1	**5P-1075**	1	WASHER-HARD (10.2X22.5X3MM THK)	
	4	2	**7X-0325**	4	BOLT (1/2-13X0.75 IN)	
	5	2	**7G-8839**	8	SPACER (6MM THK)	
	6	2	**7T-8332**	4	MOUNTING	
	7	2	**117-1317**	1	BARRIER AS	
		2	**8T-7971**	10	WASHER-HARD (13.5X25.5X5MM THK)	
	8	2	**1Q-3265**	1	ELBOW-90 DEGREES	
	9	1,2	**4Q-5432**	3	CLAMP-EXHAUST PIPE	
	10	2	**1Q-1445**	1	SWITCH-HEATER CONTROL	
	11	2	**1Q-2754**	1	PLATE-HEATER (FUEL FIRED HEATERS)	
	12	2	**8T-9530**	12	TACK-FASTENER	
	13	2	**135-6944**	1	PLATE	
	14	2	**1Q-2969**	1	PLATE-NOTICE (HEATERS)	
	15	1	**135-8761**	1	HARNESS AS	
	16	2	**146-9793**	1	PLATE-WARNING (ENG COOLANT HEATER)	
E	17	2	**4Q-5430**		PIPE (198CM)	
E	18	2	**5P-0763**		HOSE (38.1MM ID) (10CM)	
	19	1	**3T-3047**	2	CLIP AS	
	20	1	**3T-3048**	1	CLIP AS	
	21	1	**1Q-1967**	1	FILM-NO STEP	
	22	1	**5S-5063**	1	HOSE-FLOW	
	23	1	**8T-4983**	4	CLAMP-HOSE	
D	24	1	**1Q-1345**	2	HOSE (.17M EACH)	
	25	1	**7X-7958**	4	CLAMP-HOSE	
	26	1,2	**2Q-0392**	2	CONNECTOR-HOSE	
	27	1	**034-4202**	2	ELBOW	
	28	1	**7M-8485**	2	SEAL-O-RING (29.74MM ID)	
	29	1,2	**8T-4896**	8	WASHER-HARD (10.2X18.5X2.5MM THK)	
	30	1	**1Q-3012**	1	BRACKET AS	
		1	**1F-0750**	1	NUT-WELD (3/8-16 THD)	
	31	1	**8T-8917**	1	BOLT (1/2-13X1.25 IN)	
	32	1	**8M-3121**	1	CLAMP	
B	33	1	**7K-1181**	18	STRAP-CABLE	
	34	1	**4D-7388**	4	CLIP	
	35	1	**1Q-2448**	1	FILM-HEATER	
	36	1	**5S-7382**	1	BOLT (3/8-16X1.375 IN)	
	37	2	**9B-7237**	4	BOLT (3/8-16X1.25 IN)	
	38	2	**127-4532**	1	PLATE AS	
	39	2	**9M-7959**	1	CLAMP (HOSE)	
	40	1	**135-6916**	1	MODULE AS	
		1	**143-5493**	1	MODULE AS-OPERATOR	
	41	1	**127-2415**	1	DASH AS-MODULE	
		1	**6C-3680**	2	RIVET-POP	
		1	**1F-0750**	1	NUT-WELD (3/8-16 THD)	
	42	1	**143-5031**	1	CONSOLE AS-RH	
		1	**1F-0750**	11	NUT-WELD (3/8-16 THD)	
M		1	**6V-9632**	2	NUT-WELD (M6X1 THD)	
	43	1	**143-5494**	1	CONSOLE AS-LH	
		1	**1F-0750**	6	NUT-WELD (3/8-16 THD)	

135-3210 HEATER GP-COOLANT *(contd.)*

i01401028

NOTE	REF NO	GRAPHIC REF	PART NUMBER	QTY	PART NAME 1 2 3 4 5 6 (PRODUCT LEVEL)	SEE PAGE
		1	**6K-2198**	8	BOSS	
	44	2	**7W-5823**	1	SUPPORT AS	
		2	**1F-0750**	1	NUT-WELD (3/8-16 THD)	
	45	2	**6V-8188**	4	NUT (1/2-13 THD)	
	46	2	**138-8711**	2	PLATE AS	
					(EACH INCLUDES)	
		2	**1F-0750**	2	NUT-WELD (3/8-16 THD)	
	47	1	**0S-1594**	1	BOLT (3/8-16X1 IN)	
	48	1	**0S-1619**	5	BOLT (3/8-16X3.0 IN)	
	49	1	**4N-0864**	2	GASKET	
	50	1	**8T-6761**	1	PLUG-PIPE	
	51	1	**130-7439**	1	ADAPTER AS	
	52	1	**137-1790**	1	BONNET AS-COOLER	
	53	1	**1Q-1581**	1	PLATE AS	
	54	2	**6D-4247**	1	CLIP	
	55	2	**5S-7379**	2	BOLT (3/8-16X.875 IN)	

B-USE AS REQUIRED
D-ORDER BY THE METER
E-ORDER BY THE CENTIMETER
M-METRIC PART

135-3210 **HEATER GP-COOLANT** *(contd.)* **i01401028**

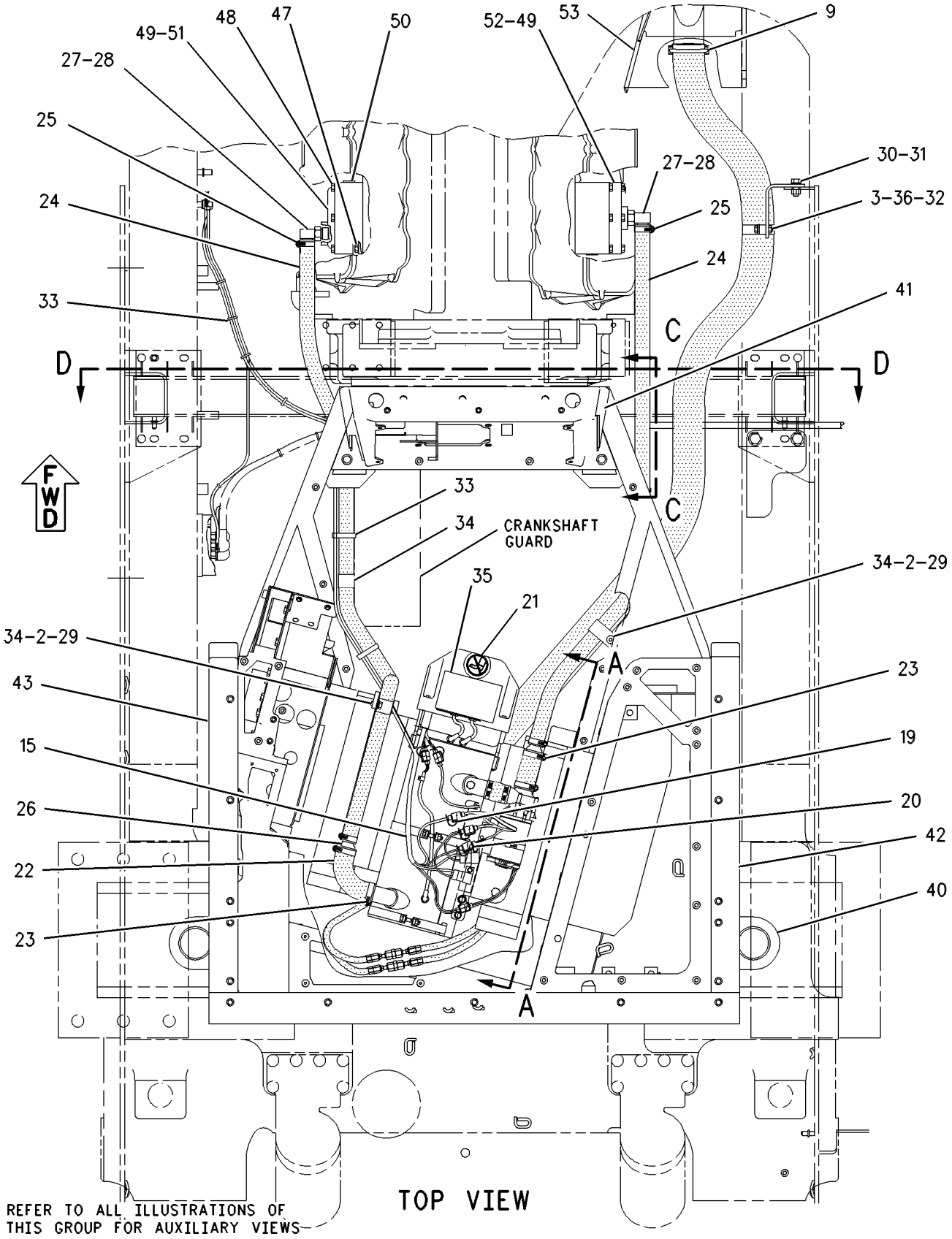

GRAPHIC #1 g00399283

135-3210 **HEATER GP-COOLANT** *(contd.)* **i01401028**

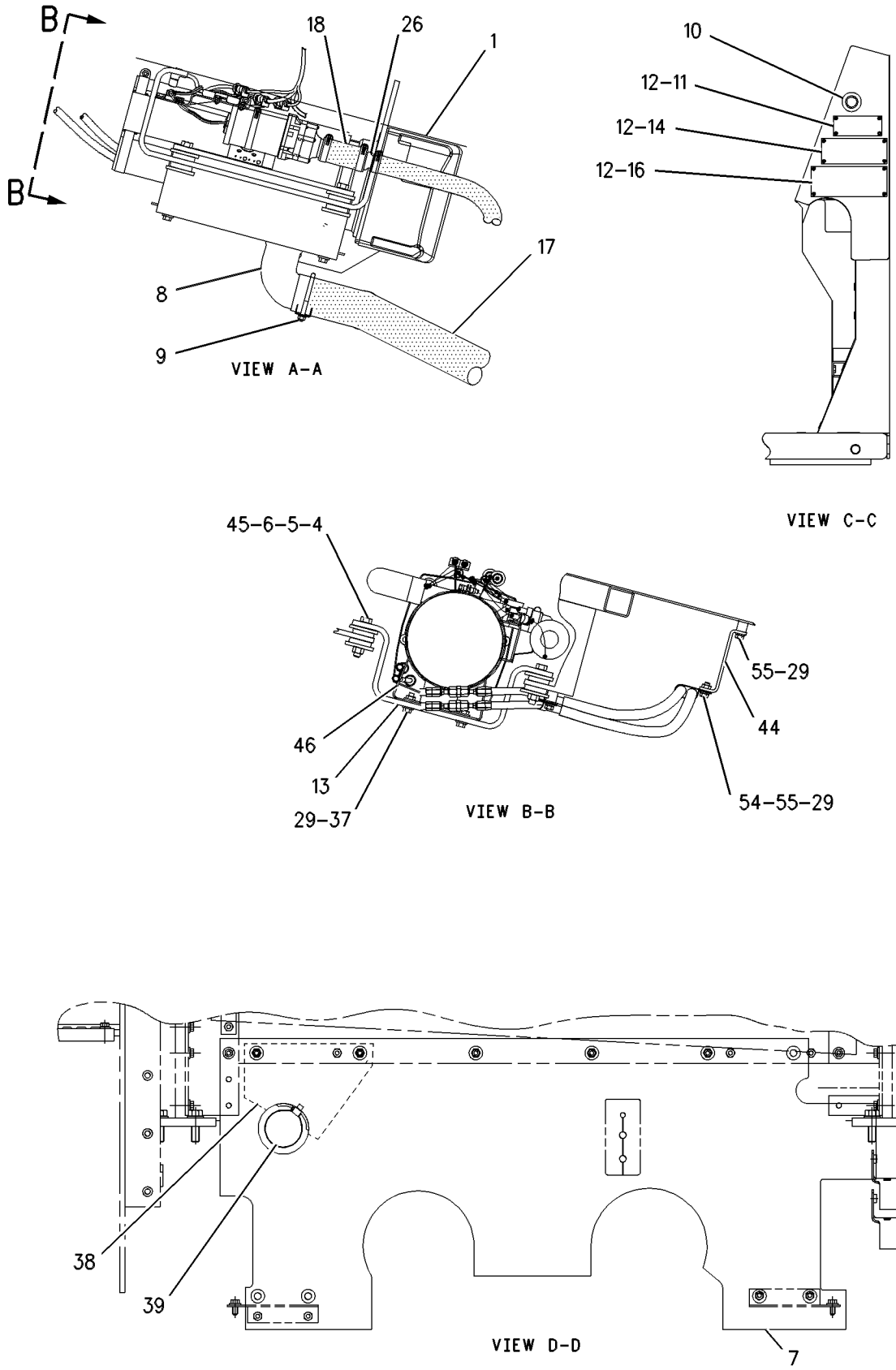

GRAPHIC #2 g00399288

ELECTRICAL AND STARTING SYSTEM

135-3210 HEATER GP-COOLANT

S/N: 3KR1-UP
PART OF 130-9720 HEATER AR
AN ATTACHMENT
TYPE 2

SMCS-1383 **i01749417**

NOTE	REF NO	GRAPHIC REF	PART NUMBER	QTY	PART NAME 1 2 3 4 5 6 (PRODUCT LEVEL)	SEE PAGE
C	1	2	*205-1679*	1	HEATER GP-JACKET WATER	
	2	1	**5M-3062**	2	BOLT (3/8-16X0.75 IN)	
	3	1	**5P-1075**	1	WASHER-HARD (10.2X22.5X3MM THK)	
	4	2	**7X-0325**	4	BOLT (1/2-13X2.5 IN)	
	5	2	**7G-8839**	8	SPACER (13.5X57X6MM THK)	
	6	2	**7T-8332**	4	MOUNTING	
	7	2	**117-1317**	1	BARRIER AS	
		2	**8T-7971**	10	WASHER-HARD (13.5X25.5X5MM THK)	
	8	2	**1Q-3265**	1	ELBOW-90 DEGREES	
	9	1,2	**4Q-5432**	3	CLAMP-EXHAUST PIPE	
	10	2	**1Q-1445**	1	SWITCH-HEATER CONTROL	
	11	2	**1Q-2754**	1	PLATE-HEATER (FUEL FIRED HEATERS)	
	12	2	**8T-9530**	12	TACK-FASTENER	
	13	2	**135-6944**	1	PLATE	
	14	2	**1Q-2969**	1	PLATE-NOTICE (HEATERS)	
	15	1	**135-8761**	1	HARNESS AS	
	16	2	**146-9793**	1	PLATE-WARNING (ENG COOLANT HEATER)	
E	17	2	**4Q-5430**		PIPE (198CM)	
E	18	2	**5P-0763**		HOSE (38.1MM ID) (10CM)	
	19	1	**3T-3047**	2	CLIP AS	
	20	1	**3T-3048**	1	CLIP AS	
	21	1	**1Q-1967**	1	FILM-NO STEP	
	22	1	**5S-5063**	1	HOSE-FLOW	
	23	1	**8T-4983**	4	CLAMP-HOSE	
D	24	1	**1Q-1345**	2	HOSE (.17M EACH)	
	25	1	**7X-7958**	4	CLAMP-HOSE	
	26	1,2	**2Q-0392**	2	CONNECTOR-HOSE	
	27	1	**034-4202**	2	ELBOW	
	28	1	**7M-8485**	2	SEAL-O-RING	
	29	1,2	**8T-4896**	8	WASHER-HARD (10.2X18.5X2.5MM THK)	
	30	1	**1Q-3012**	1	BRACKET AS	
		1	**1F-0750**	1	NUT-WELD (3/8-16 THD)	
	31	1	**8T-8917**	1	BOLT (1/2-13X1.25 IN)	
	32	1	**8M-3121**	1	CLAMP	
B	33	1	**7K-1181**	18	STRAP-CABLE	
	34	1	**4D-7388**	4	CLIP	
	35	1	**1Q-2448**	1	FILM-HEATER	
	36	1	**5S-7382**	1	BOLT (3/8-16X1.375 IN)	
	37	2	**9B-7237**	4	BOLT (3/8-16X1.25 IN)	
	38	2	**127-4532**	1	PLATE AS	
	39	2	**9M-7959**	1	CLAMP (HOSE)	
	40	1	**135-6916**	1	MODULE AS	
		1	**143-5493**	1	MODULE AS-OPERATOR	
	41	1	**127-2415**	1	DASH AS-MODULE	
		1	**6C-3680**	2	RIVET-POP	
		1	**1F-0750**	1	NUT-WELD (3/8-16 THD)	
	42	1	**143-5031**	1	CONSOLE AS-RH	
		1	**1F-0750**	11	NUT-WELD (3/8-16 THD)	
M		1	**6V-9632**	2	NUT-WELD (M6X1 THD)	
	43	1	**143-5494**	1	CONSOLE AS-LH	
		1	**1F-0750**	6	NUT-WELD (3/8-16 THD)	
		1	**6K-2198**	8	BOSS	
	44	2	**7W-5823**	1	SUPPORT AS	
		2	**1F-0750**	1	NUT-WELD (3/8-16 THD)	

135-3210 HEATER GP-COOLANT *(contd.)*

i01749417

NOTE	REF NO	GRAPHIC REF	PART NUMBER	QTY	PART NAME 1 2 3 4 5 6 (PRODUCT LEVEL)	SEE PAGE
	45	2	**6V-8188**	4	NUT (1/2-13 THD)	
	46	2	**138-8711**	2	PLATE AS	
					(EACH INCLUDES)	
		2	**1F-0750**	2	NUT-WELD (3/8-16 THD)	
	47	1	**0S-1594**	1	BOLT (3/8-16X1 IN)	
	48	1	**0S-1619**	5	BOLT (3/8-16X3 IN)	
	49	1	**4N-0864**	2	GASKET	
	50	1	**8T-6761**	1	PLUG-PIPE	
	51	1	**130-7439**	1	ADAPTER AS	
	52	1	**137-1790**	1	BONNET AS-COOLER	
	53	1	**1Q-1581**	1	PLATE AS	
	54	2	**6D-4247**	1	CLIP	
	55	2	**5S-7379**	2	BOLT (3/8-16X0.875 IN)	

B-USE AS REQUIRED
C-CHANGE FROM PREVIOUS TYPE
D-ORDER BY THE METER
E-ORDER BY THE CENTIMETER
M-METRIC PART

135-3210 **HEATER GP-COOLANT** *(contd.)* **i01749417**

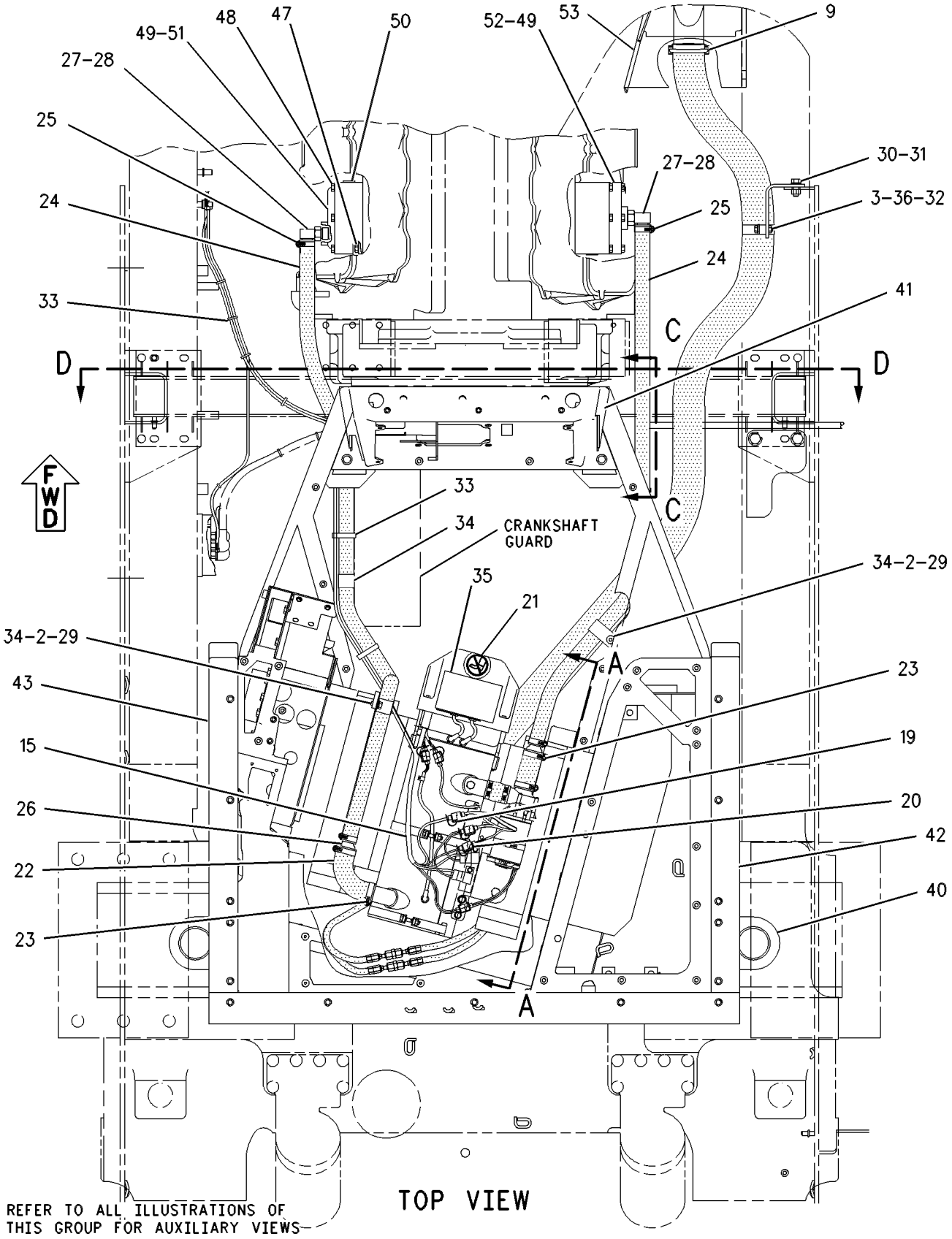

GRAPHIC #1 g00399283

135-3210 **HEATER GP-COOLANT** *(contd.)* **i01749417**

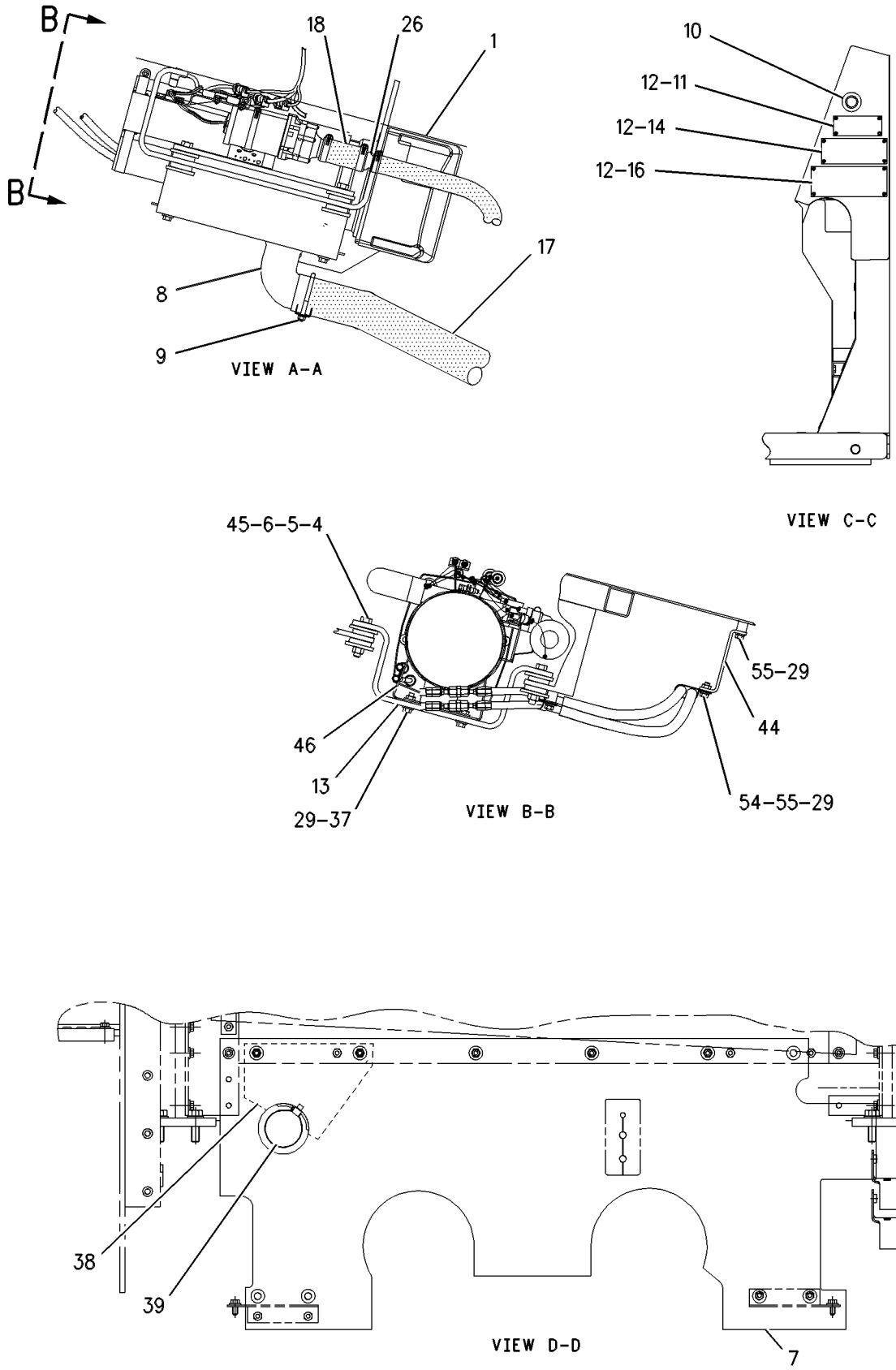

GRAPHIC #2 g00399288

ELECTRICAL AND STARTING SYSTEM

126-3935 HEATER GP-FUEL

S/N: 3KR1-UP
FOR USE WITH CAB HEATER
AN ATTACHMENT

SMCS-1296 **i01741422**

NOTE	REF NO	GRAPHIC REF	PART NUMBER	QTY	PART NAME 1 2 3 4 5 6 (PRODUCT LEVEL)	SEE PAGE
I	1	1	**127-5183**	1	HOSE AS	
I	2	1	**127-5182**	1	HOSE AS	
	3	1	**7C-0754**	2	TEE-HOSE	
	4	1	**101-8240**	1	BRACKET	
	5	1	**4L-6454**	6	BOLT (3/8-16X1 IN)	
	6	1	**8T-4896**	6	WASHER-HARD (10.2X18.5X2.5MM THK)	
	7	1	**9X-2488**	9	CLAMP-HOSE	
	8	1	**106-5823**	2	HOSE	
	9	1	**9W-8394**	1	ORIFICE	
	10	1	**6V-8722**	1	ELBOW	
	11	1	**8T-2530**	1	ELBOW	
	12	1	**3K-0360**	2	SEAL-O-RING	
	13	1	**7J-9108**	4	SEAL-O-RING	
	14	1	**111-9289**	1	HEATER AS	
		1	**2M-9780**	2	SEAL-O-RING	
		1	**111-9827**	2	ADAPTER	
	15	1	**6D-4244**	1	CLIP	
	16	1	**6V-1228**	1	CLIP	
	17	1	**5P-6994**	1	CLIP	
	18	1	**5C-6565**	1	BOLT (1/2-13X1.125 IN)	
	19	1	**8T-4223**	1	WASHER-HARD (13.5X25.5X3MM THK)	
	20	1	**6V-8188**	1	NUT (1/2-13 THD)	

I-SEE HOSE FABRICATION GUIDE

126-3935 **HEATER GP-FUEL** *(contd.)* **i01741422**

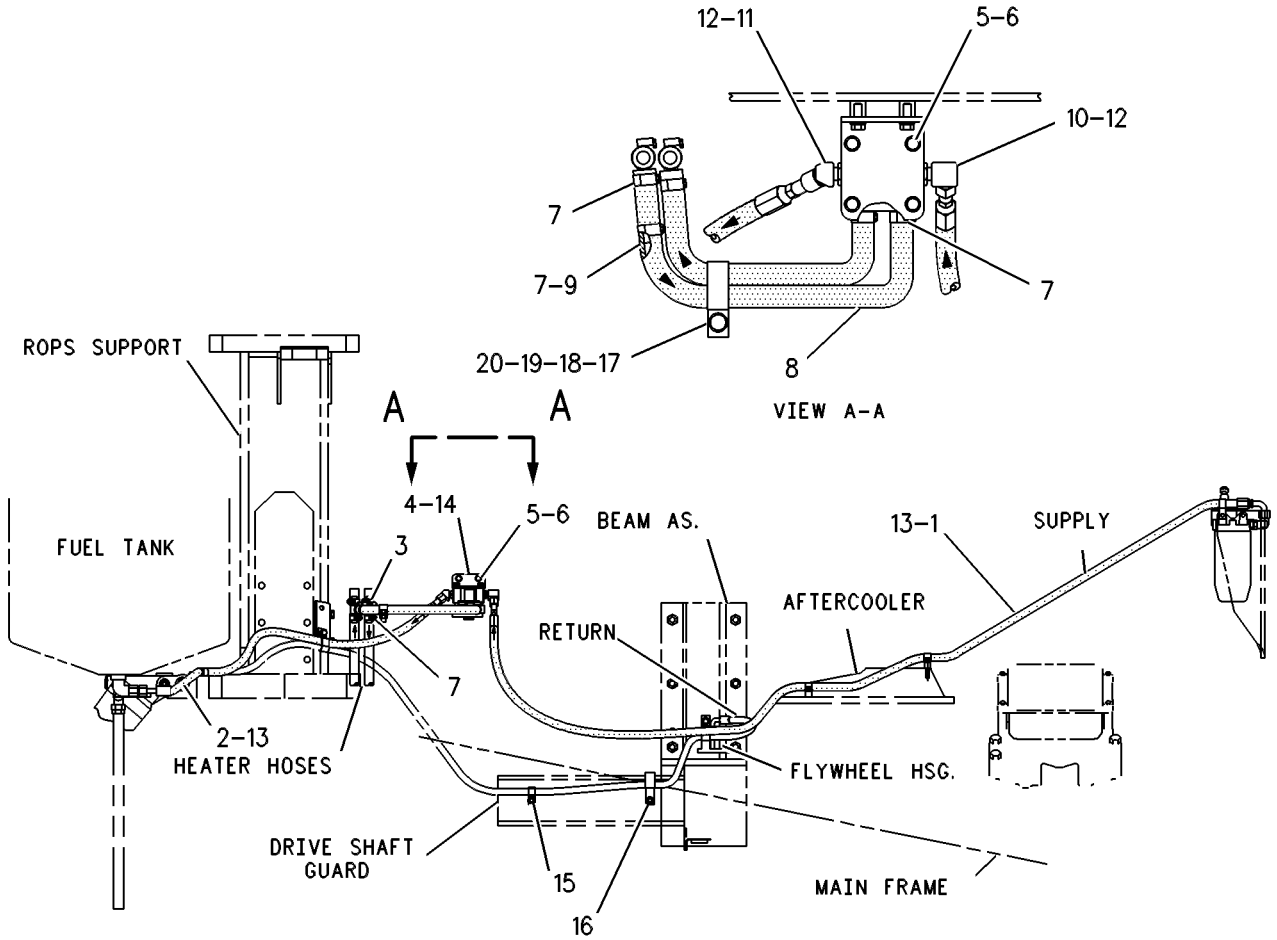

GRAPHIC #1 g00330579

150-0413 HEATER GP-FUEL

S/N: 3KR1-UP
FOR USE WITH CAB
AN ATTACHMENT

SMCS-1296 **i01741428**

NOTE	REF NO	GRAPHIC REF	PART NUMBER	QTY	PART NAME 1 2 3 4 5 6 (PRODUCT LEVEL)	SEE PAGE
	1	1	**6V-1228**	1	CLIP	
	2	1	**7C-0754**	2	TEE-HOSE	
I	3	1	**8W-4710**	1	HOSE AS	
I	4	1	**8W-5729**	1	HOSE AS	
	5	1	**9W-8394**	1	ORIFICE	
	6	1	**9X-2488**	9	CLAMP-HOSE	
	7	1	**101-8240**	1	BRACKET	
	8	1	**111-9289**	1	HEATER AS	
		1	**2M-9780**	2	SEAL-O-RING	
		1	**111-9827**	2	ADAPTER	
	9	1	*150-3037*	1	ELBOW AS	
		1	**3K-0360**	1	SEAL-O-RING	
		1	**7J-9108**	1	SEAL-O-RING	
		1	**8T-2530**	1	ELBOW	
	10	1	*150-4048*	1	ELBOW GP	
		1	**3K-0360**	1	SEAL-O-RING	
		1	**6V-8722**	1	ELBOW	
		1	**7J-9108**	1	SEAL-O-RING	
	11	1	**4L-6454**	6	BOLT (3/8-16X1 IN)	
	12	1	**5C-6565**	1	BOLT (1/2-13X1.125 IN)	
	13	1	**5P-6994**	1	CLIP	
	14	1	**6D-4244**	1	CLIP	
	15	1	**6V-8188**	1	NUT (1/2-13 THD)	
	16	1	**7J-9108**	2	SEAL-O-RING	
	17	1	**8T-4223**	1	WASHER-HARD (13.5X25.5X3MM THK)	
	18	1	**8T-4896**	6	WASHER-HARD (10.2X18.5X2.5MM THK)	
	19	1	**106-5823**	2	HOSE	

I-SEE HOSE FABRICATION GUIDE

150-0413 **HEATER GP-FUEL** *(contd.)* **i01741428**

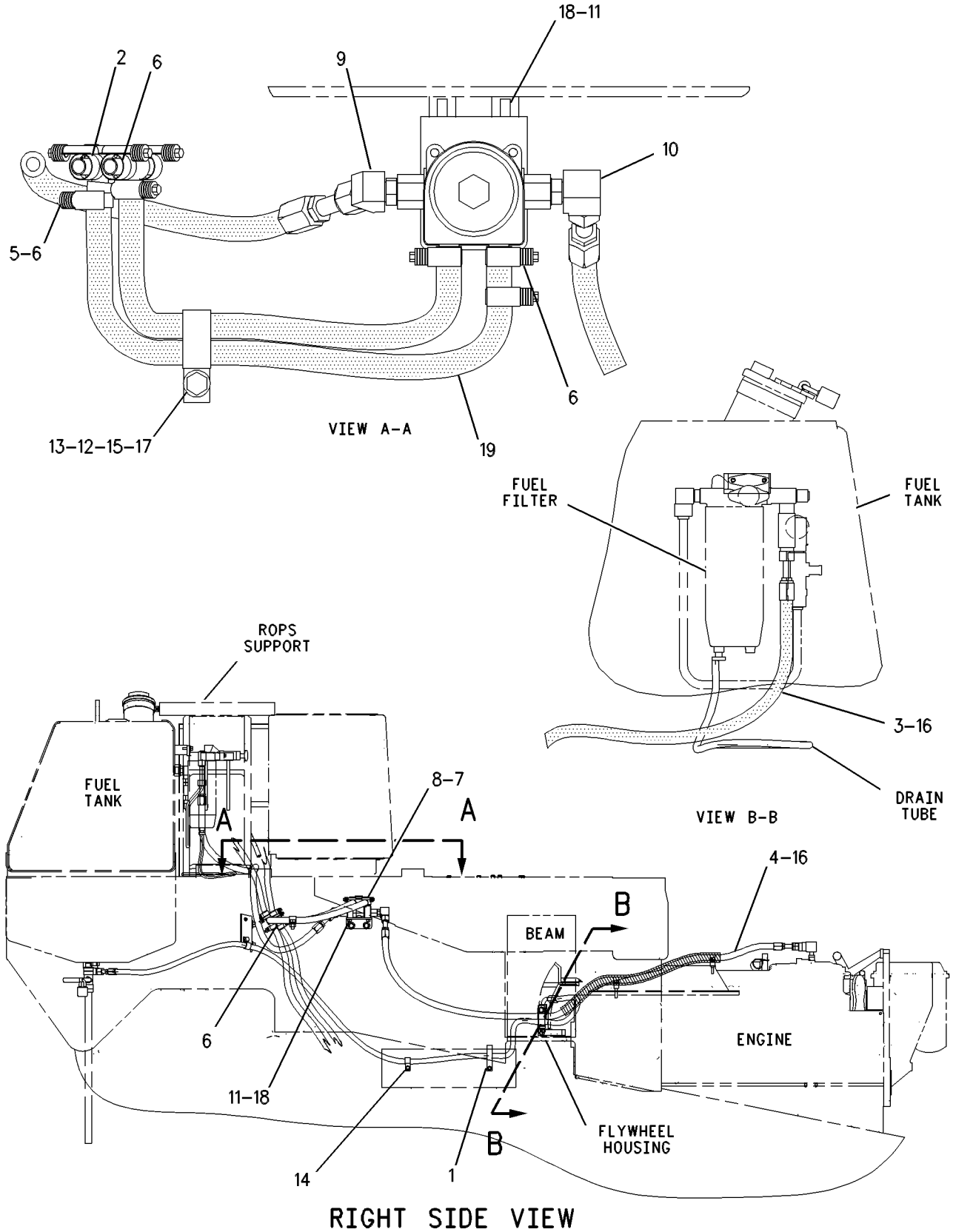

GRAPHIC #1 g00654989

ELECTRICAL AND STARTING SYSTEM

115-4555 HEATER GP-JACKET WATER

S/N: 3KR1-486
120 VOLT

SMCS-1383 **i01521313**

NOTE	REF NO	GRAPHIC REF	PART NUMBER	QTY	PART NAME 1 2 3 4 5 6 (PRODUCT LEVEL)	SEE PAGE
	1	1	**115-1911**	1	CORD AS-HEATER	
	2	1	**6N-1604**	2	CAP AS-DUST	
	3	1	**7N-0210**	1	ADAPTER-HEATER	
		1	**4N-0864**	1	GASKET	
	4	1	**8T-7008**	5	BOLT (3/8-16X3 IN)	
	5	1	**9G-6655**	2	ELEMENT AS-JACKET WATER HEATER (120 VOLTS/1500 WATTS)	
	6	1	**4L-6454**	1	BOLT (3/8-16X1 IN)	
	7	1	**4P-7581**	2	CLIP	
B	8	1	**9X-6772**	5	STRAP-CABLE	
	9	1	**4P-7428**	1	CLIP	

B-USE AS REQUIRED

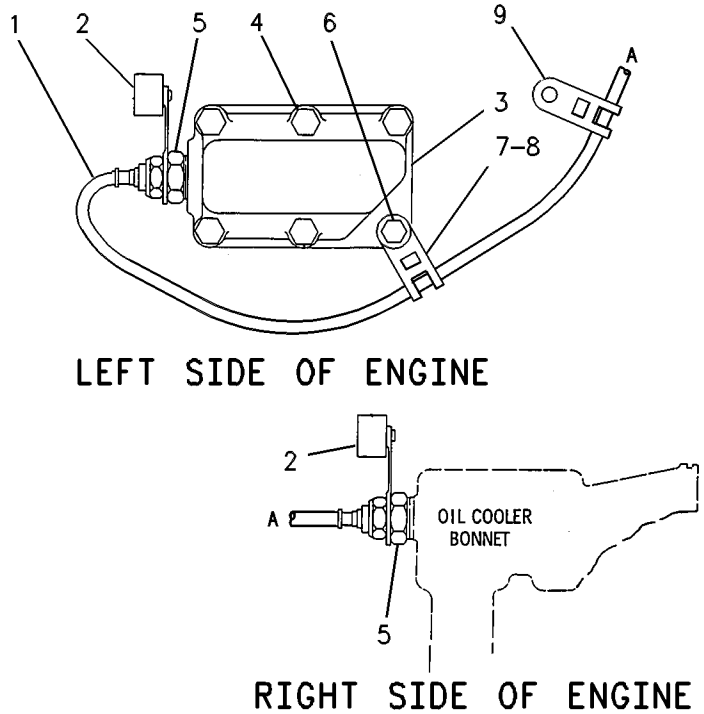

GRAPHIC #1 g00248862

ELECTRICAL AND STARTING SYSTEM

135-6243 HEATER GP-JACKET WATER

S/N: 3KR487-UP

120 VOLT, 30 AMPERE

SMCS-1383 **i00601608**

NOTE	REF NO	GRAPHIC REF	PART NUMBER	QTY	PART NAME 1 2 3 4 5 6 (PRODUCT LEVEL)	SEE PAGE
	1	1	**4N-0864**	1	GASKET	
	2	1	**7N-0210**	1	ADAPTER-HEATER	
	3	1	**9G-6655**	2	ELEMENT AS-JACKET WATER HEATER	
	4	1	**9X-6772**	7	STRAP-CABLE	
	5	1	**4L-6454**	1	BOLT (3/8-16X1.0IN)	
	6	1	**4P-7428**	2	CLIP (13.5MM ID) (SLOTTED)	
	7	1	**135-3678**	1	CORD AS-JACKET	
	8	1	**8T-7008**	5	BOLT (3/8-16X3IN)	

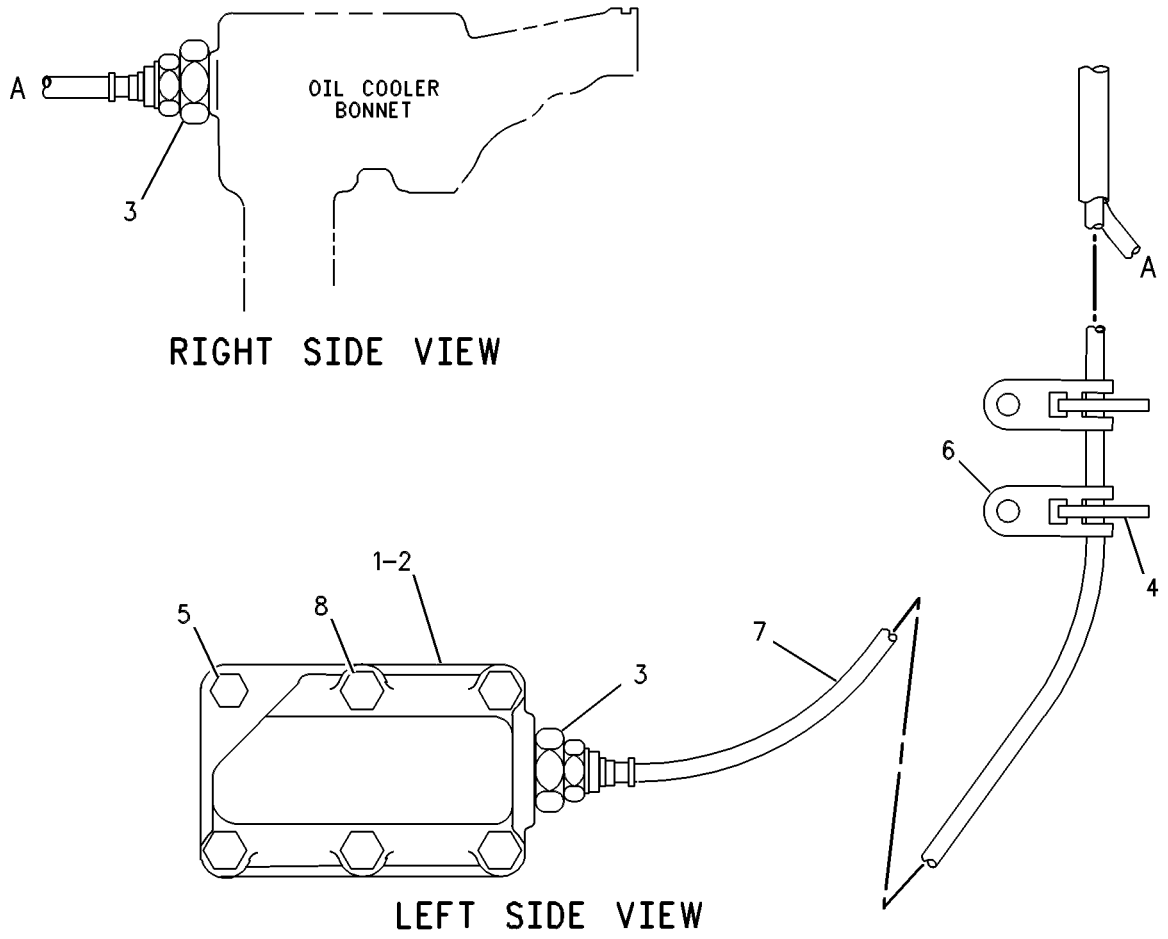

GRAPHIC #1 g00278290

ELECTRICAL AND STARTING SYSTEM

135-6245 HEATER GP-JACKET WATER

S/N: 3KR1-UP
240 VOLT, 30 AMPERE
AN ATTACHMENT

SMCS-1383 **i01232244**

NOTE	REF NO	GRAPHIC REF	PART NUMBER	QTY	PART NAME 1 2 3 4 5 6 (PRODUCT LEVEL)	SEE PAGE
	1	1	**4N-0864**	1	GASKET	
	2	1	**6T-3764**	2	ELEMENT AS-JACKET WATER HEATER	
	3	1	**7N-0210**	1	ADAPTER-HEATER	
B	4	1	**9X-6772**	7	STRAP-CABLE	
	5	1	**4L-6454**	1	BOLT (3/8-16X1 IN)	
	6	1	**4P-7428**	2	CLIP (13.5MM ID)	
	7	1	**8T-7008**	5	BOLT (3/8-16X3IN)	
	8	1	**135-3679**	1	CORD AS-JACKET WATER HEATER	

B-USE AS REQUIRED

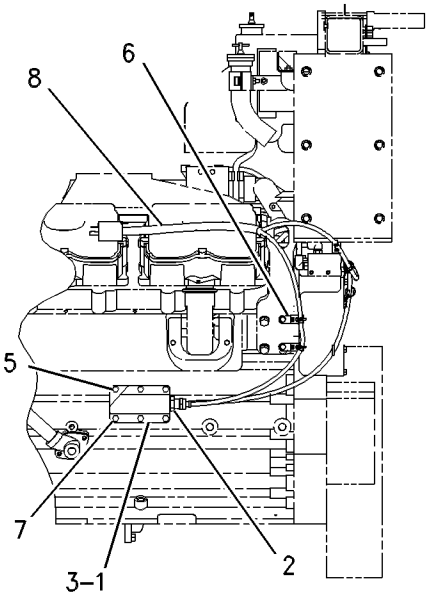

LEFT SIDE VIEW

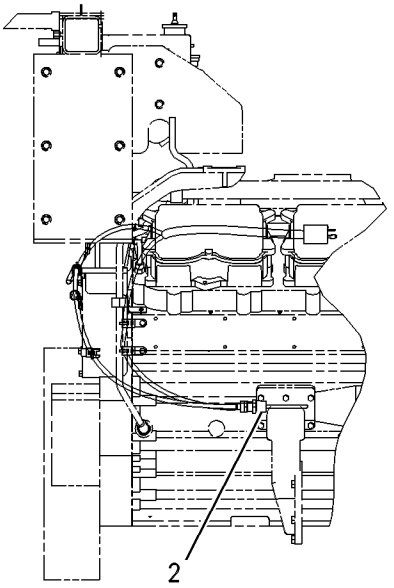

RIGHT SIDE VIEW

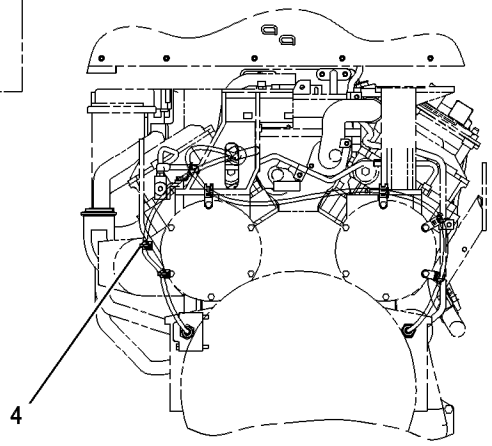

REAR VIEW

GRAPHIC #1 g00279605

9W-0742 JUNCTION BLOCK GP

S/N: 3KR1-UP

PART OF 106-8484, 109-5749 BATTERY & WIRING GP, 116-5829, 149-7027 STARTING AR-COLD WEATHER

ALSO AN ATTACHMENT

SMCS-1408 **i01727104**

NOTE	REF NO	GRAPHIC REF	PART NUMBER	QTY	PART NAME 1 2 3 4 5 6 (PRODUCT LEVEL)	SEE PAGE
	1	1	**8C-6358**	1	JUNCTION BLOCK AS	
	1A	1	**8T-3519**	3	BOLT-BRONZE (1/2-13X2.0 IN)	
BD	2	1	**6V-2722**		TUBE-HEAT SHRINK	
	3	1	**7F-0560**	6	WASHER (2.57MM THK)	
	4	1	**8T-3518**	6	NUT-FULL (1/2-13 THD)	

B-USE AS REQUIRED
D-ORDER BY THE METER

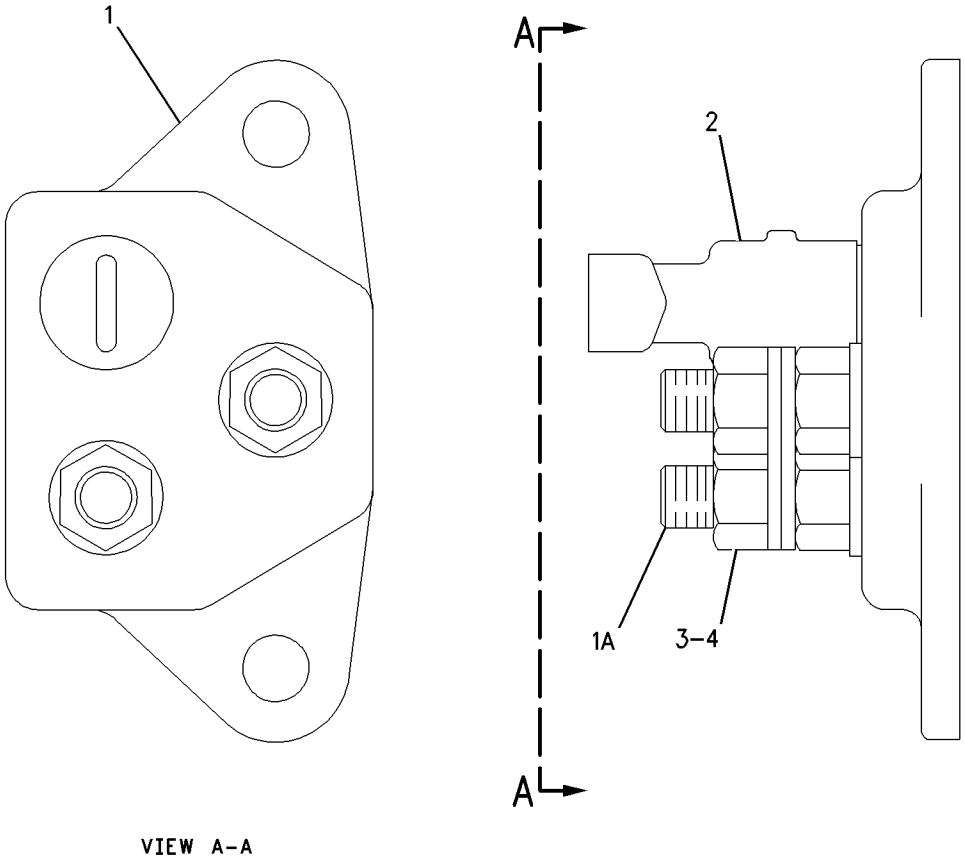

GRAPHIC #1 g00650721

3E-6389 LAMP GP-DOME

S/N: 3KR1-UP
24 VOLT. WITH SWITCH
PART OF 111-8547 CAB GP
AN ATTACHMENT

SMCS-1429 **i01742169**

NOTE	REF NO	GRAPHIC REF	PART NUMBER	QTY	PART NAME 1 2 3 4 5 6 (PRODUCT LEVEL)	SEE PAGE
	1	1	**7N-9943**	1	LAMP (24 VOLT) (DOME)	
	2	1	**102-8803**	1	KIT-RECEPTACLE (3 PIN)	
					(INCLUDES RECEPTACLE AS & WEDGE)	
	3	1	**3E-3371**	1	WEDGE-RECEPTACLE LOCK (3 PIN)	
	4	1	**8T-8729**	3	PIN-CONNECTOR	
	5	1	**7T-0020**	1	LENS (DOME LAMP)	

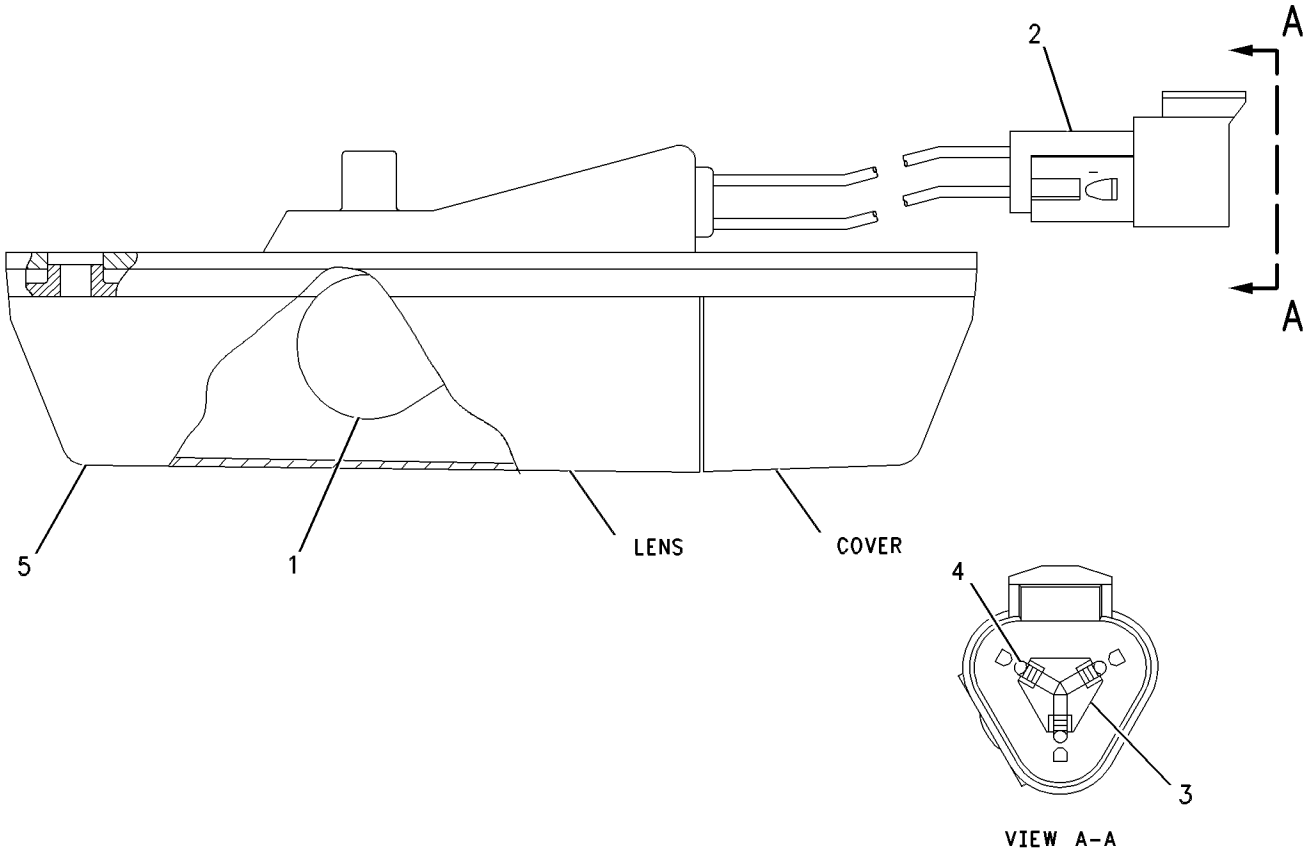

GRAPHIC #1 g00647928

106-8964 LAMP GP-FLOOD

S/N: 4KP1-UP; 4LP1-UP; 3KR1-UP
24 VOLT. SUSPENDED
PART OF 114-5992, 117-1328 LIGHTING GP-AUXILIARY
AN ATTACHMENT

SMCS-1434 **i01647325**

NOTE	REF NO	GRAPHIC REF	PART NUMBER	QTY	PART NAME 1 2 3 4 5 6 (PRODUCT LEVEL)	SEE PAGE
	1	1	**107-5851**	4	SCREW	
	2	1	**107-5853**	1	LENS AS (FLOODLIGHT)	
		1	**107-5852**	1	SEAL	
M	3	1	**8T-0337**	2	SCREW-MACHINE (M4X0.7X12MM)	
	4	1	**107-5854**	1	BODY AS-LAMP	
	5	1	**9X-3463**	1	LAMP (24 VOLT) (FLOOD)	

M-METRIC PART

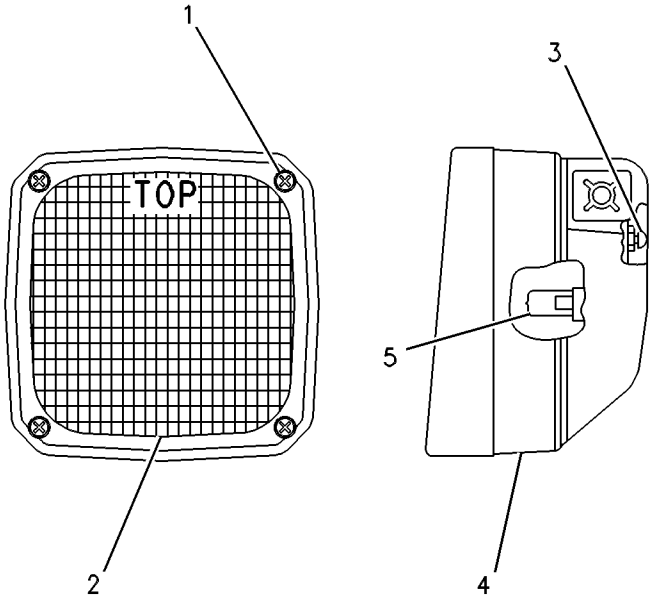

GRAPHIC #1 g00273968

133-6335 LAMP GP-FLOOD

S/N: 2YP1-99999; 4PP1-UP; 5LP1-99999; 3KR1-UP
24 VOLT. SUSPENDED
PART OF 125-2001 LIGHTING GP-FLOOD
AN ATTACHMENT

SMCS-1434 **i01647335**

NOTE	REF NO	GRAPHIC REF	PART NUMBER	QTY	PART NAME 1 2 3 4 5 6 (PRODUCT LEVEL)	SEE PAGE
	1	1	**107-5851**	4	SCREW	
	2	1	**107-5853**	1	LENS AS (FLOODLIGHT)	
	3	1	**107-5852**	1	SEAL	
	4	1	**139-8660**	1	BODY AS-LAMP	
	5	1	**9X-3463**	1	LAMP (24 VOLT) (65 WATT)	
	6	1	**8T-8729**	2	PIN-CONNECTOR	
	7	1	**3E-3365**	1	WEDGE-RECEPTACLE LOCK (2 PIN)	
	8	1	**102-8802**	1	KIT-RECEPTACLE (2 PIN)	
					(INCLUDES RECEPTACLE AS & WEDGE)	

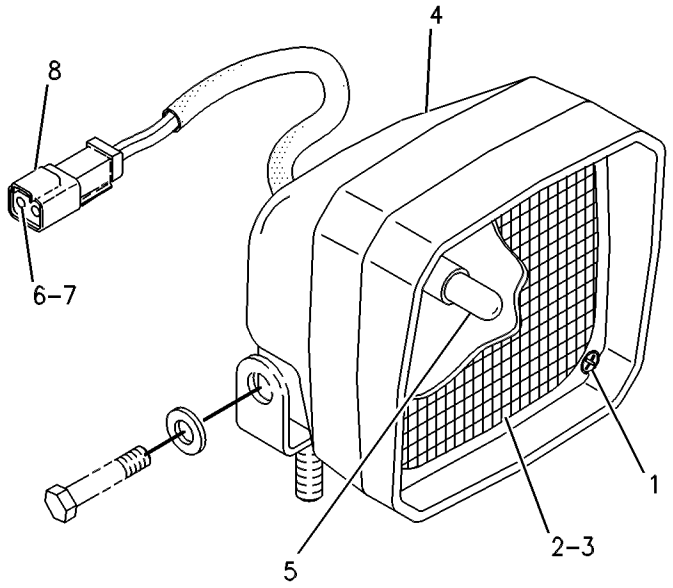

GRAPHIC #1 g00272797

133-6336 LAMP GP-FLOOD

S/N: 3KR1-1112
24 VOLT. VERTICAL
PART OF 134-0978 LIGHTING GP-FLOOD

SMCS-1434 **i01311685**

NOTE	REF NO	GRAPHIC REF	PART NUMBER	QTY	PART NAME 1 2 3 4 5 6 (PRODUCT LEVEL)	SEE PAGE
	1	1	**107-5851**	4	SCREW	
	2	1	**107-5853**	1	LENS AS-FLOOD	
	3	1	**107-5852**	1	SEAL	
	4	1	**139-8660**	1	BODY AS-LAMP	
	5	1	**9X-3463**	1	LAMP (24 VOLT)(65 WATT)	
	6	1	**102-8802**	1	KIT-RECEPTACLE (2 PIN)	
					(INCLUDES WEDGE & RECEPTACLE AS)	
	7	1	**8T-8729**	2	PIN-CONNECTOR	
	8	1	**3E-3365**	1	WEDGE-RECEPTACLE LOCK (2 PIN)	

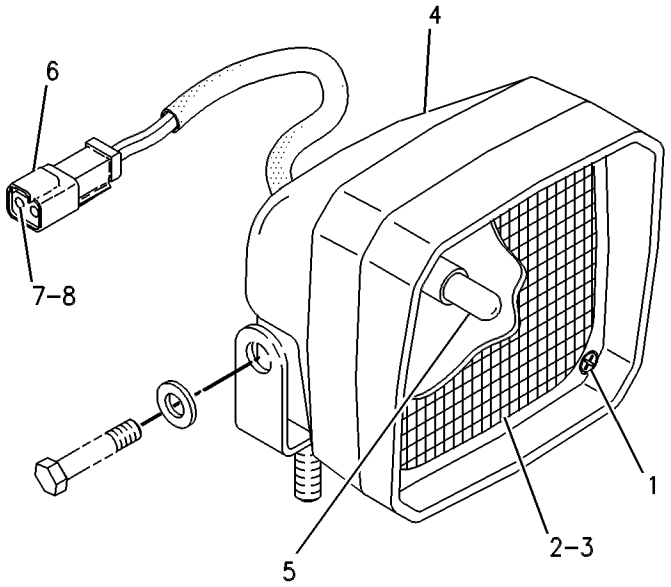

GRAPHIC #1 g00258483

147-0319 LAMP GP-FLOOD

S/N: 2YP1-99999; 4KP1-UP; 4LP1-UP; 4PP1-UP; 5LP1-99999; 7KP1-UP; 3KR1-UP; BRT1-UP; BEY1-UP
24 VOLT. SUSPENDED
PART OF 152-8427 LIGHTING GP, 125-2001 LIGHTING GP-FLOOD
AN ATTACHMENT

SMCS-1434 **i01727116**

NOTE	REF NO	GRAPHIC REF	PART NUMBER	QTY	PART NAME 1 2 3 4 5 6 (PRODUCT LEVEL)	SEE PAGE
	1	1	**9X-3463**	1	LAMP-HEAD (24 VOLT) (FLOODLIGHT)	
	2	1	**158-0250**	1	BODY AS-LAMP	
	3	1	**158-0248**	1	LENS AS (FLOODLIGHT)	
	4	1	**158-0252**	1	BEZEL	
	5	1	**188-8849**	2	CLAMP	

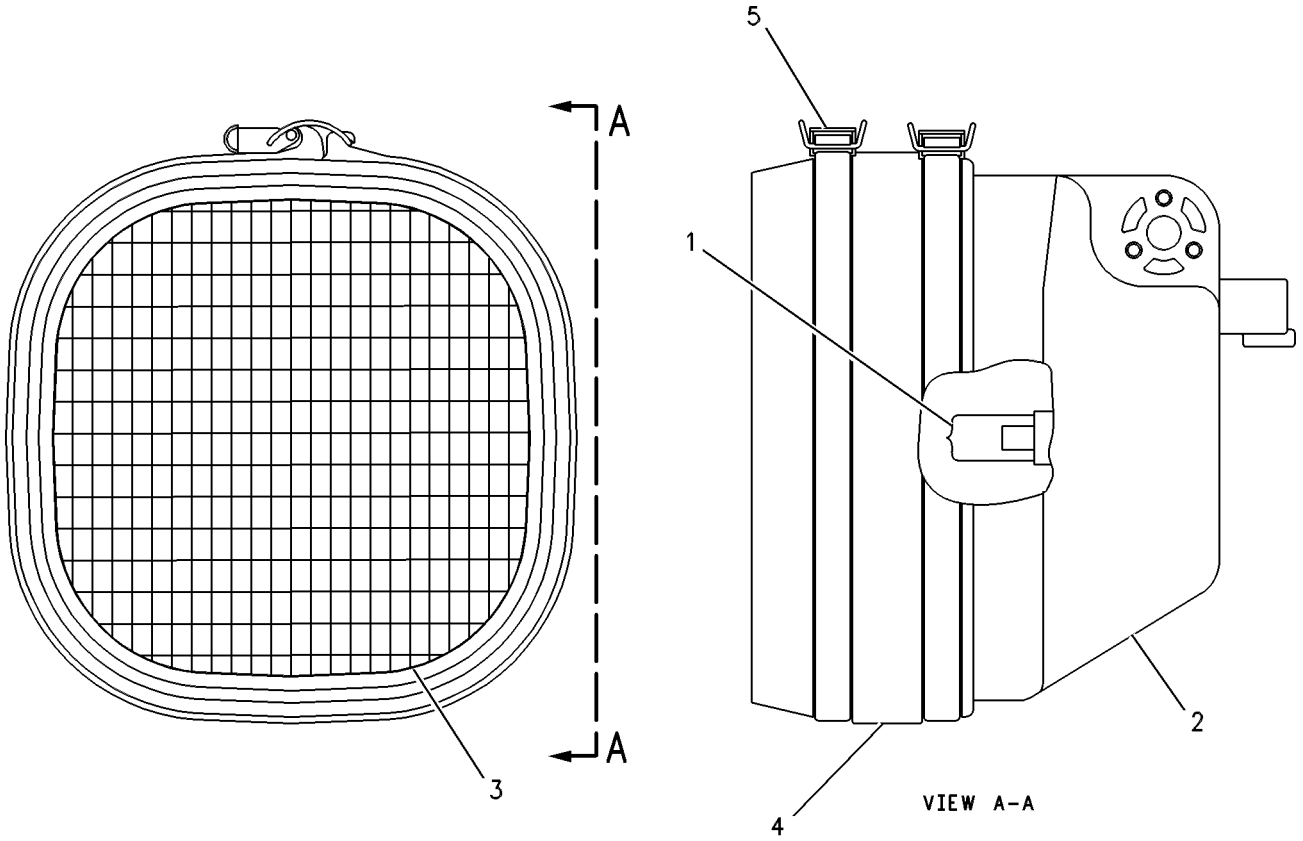

GRAPHIC #1 g00458549

153-2073 LAMP GP-FLOOD

S/N: 3KR1113-UP
24 VOLT. VERTICAL
PART OF 134-0978 LIGHTING GP-FLOOD

SMCS-1434 **i01727121**

NOTE	REF NO	GRAPHIC REF	PART NUMBER	QTY	PART NAME 1 2 3 4 5 6 (PRODUCT LEVEL)	SEE PAGE
	1	1	**9X-3463**	1	LAMP-HEAD (24 VOLT) (FLOODLIGHT)	
	2	1	**158-0250**	1	BODY AS-LAMP	
	3	1	**158-0248**	1	LENS AS (FLOODLIGHT)	
	4	1	**158-0252**	1	BEZEL	
	5	1	**188-8849**	2	CLAMP	

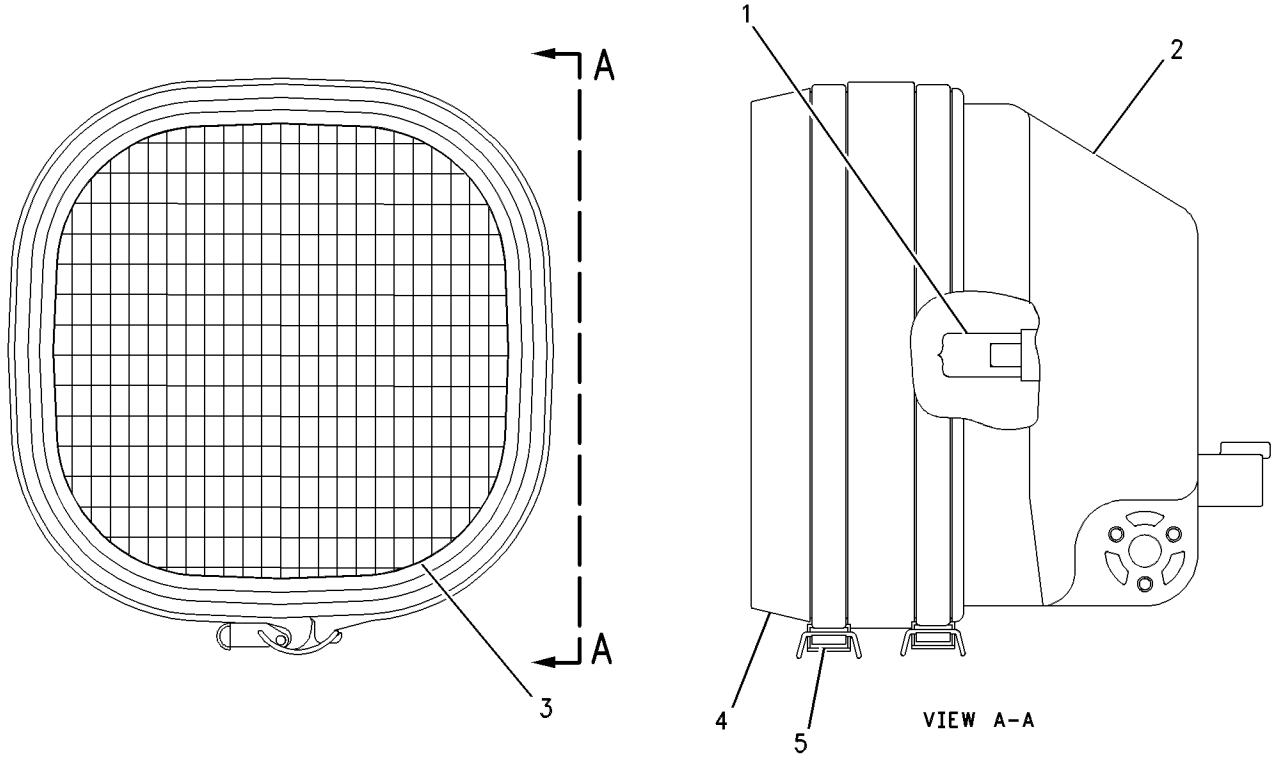

GRAPHIC #1 g00449633

ELECTRICAL AND STARTING SYSTEM

114-6009 LIGHTING AR

S/N: 3KR1-UP
FOR USE WITH BULLDOZER LIFT CYLINDERS AND WASTE DISPOSAL AR
AN ATTACHMENT
TYPE 1

SMCS-1429 **i01742177**

NOTE	REF NO	GRAPHIC REF	PART NUMBER	QTY	PART NAME 1 2 3 4 5 6 (PRODUCT LEVEL)	SEE PAGE
Y	1	1	*117-1328*	2	LIGHTING GP-AUXILIARY	428
	2	1	**6V-8801**	12	NUT (3/8-16 THD)	
	3	1	**9X-6772**	12	STRAP-CABLE	
	4	1	**5P-1075**	24	WASHER-HARD (10.2X22.5X3MM THK)	
	5	1	**115-1032**	2	BRACKET	
	6	1	**4L-6454**	12	BOLT (3/8-16X1 IN)	
	7	1	**4P-7429**	4	CLIP	
	8	1	**5P-2228**	4	BOLT (1/2-13X1 IN)	
	9	1	**5C-6565**	8	BOLT (1/2-13X1.125 IN)	
	10	1	**8T-4223**	12	WASHER-HARD (13.5X25.5X3MM THK)	
	11	1	**9U-9015**	2	HARNESS AS	
	12	1	**115-1250**	2	BRACKET AS	
					(EACH INCLUDES)	
		1	**7T-1099**	2	LINK	

Y-SEPARATE ILLUSTRATION

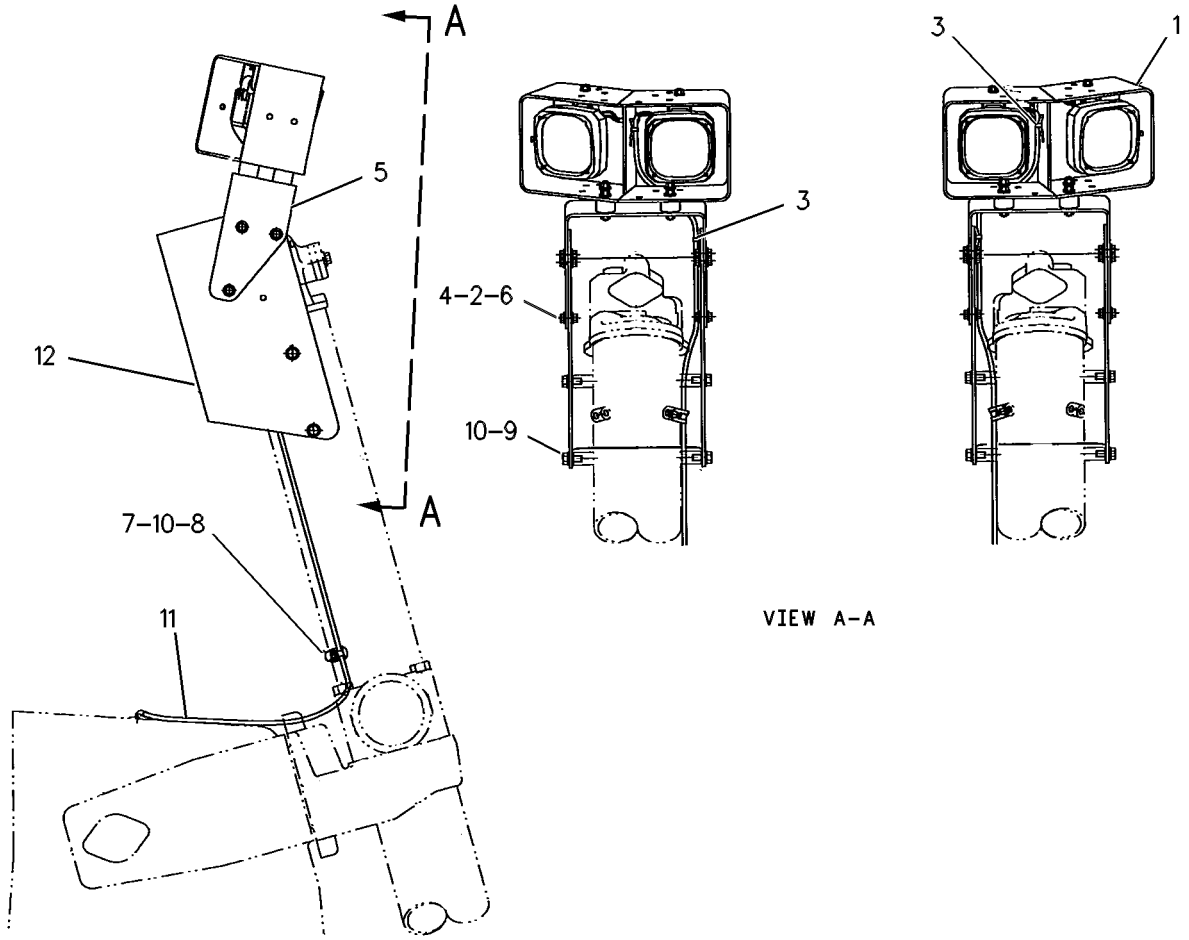

GRAPHIC #1 g00253831

MEMORANDA

114-6009 LIGHTING AR

S/N: 3KR1-UP

FOR USE WITH BULLDOZER LIFT CYLINDERS AND WASTE DISPOSAL AR

AN ATTACHMENT

TYPE 2

SMCS-1429 **i01742180**

NOTE	REF NO	GRAPHIC REF	PART NUMBER	QTY	PART NAME 1 2 3 4 5 6 (PRODUCT LEVEL)	SEE PAGE
CY	1	1	**152-8427**	2	LIGHTING GP	426
	2	1	**6V-8801**	14	NUT (3/8-16 THD)	
	3	1	**9X-6772**	14	STRAP-CABLE	
	4	1	**5P-1075**	24	WASHER-HARD (10.2X22.5X3MM THK)	
	5	1	**115-1032**	2	BRACKET	
	6	1	**4L-6454**	2	BOLT (3/8-16X1 IN)	
	7	1	**4P-7429**	4	CLIP	
	8	1	**5P-2226**	4	COVER-IDLE SCREW	
	9	1	**5C-6565**	8	BOLT (1/2-13X1.125 IN)	
	10	1	**8T-4223**	12	WASHER-HARD (13.5X25.5X3MM THK)	
C	11	1	**151-4854**	2	HARNESS AS	
	12	1	**115-1250**	2	BRACKET AS	
					(EACH INCLUDES)	
		1	**7T-1099**	2	LINK	
C	13	1	**4P-7581**	2	CLIP	
C	14	1	**8T-4896**	4	WASHER-HARD (10.2X18.5X2.5MM THK)	
C	15	1	**9B-7237**	12	BOLT (3/8-16X1.25 IN)	

C-CHANGE FROM PREVIOUS TYPE
Y-SEPARATE ILLUSTRATION

114-6009 **LIGHTING AR** *(contd.)* **i01742180**

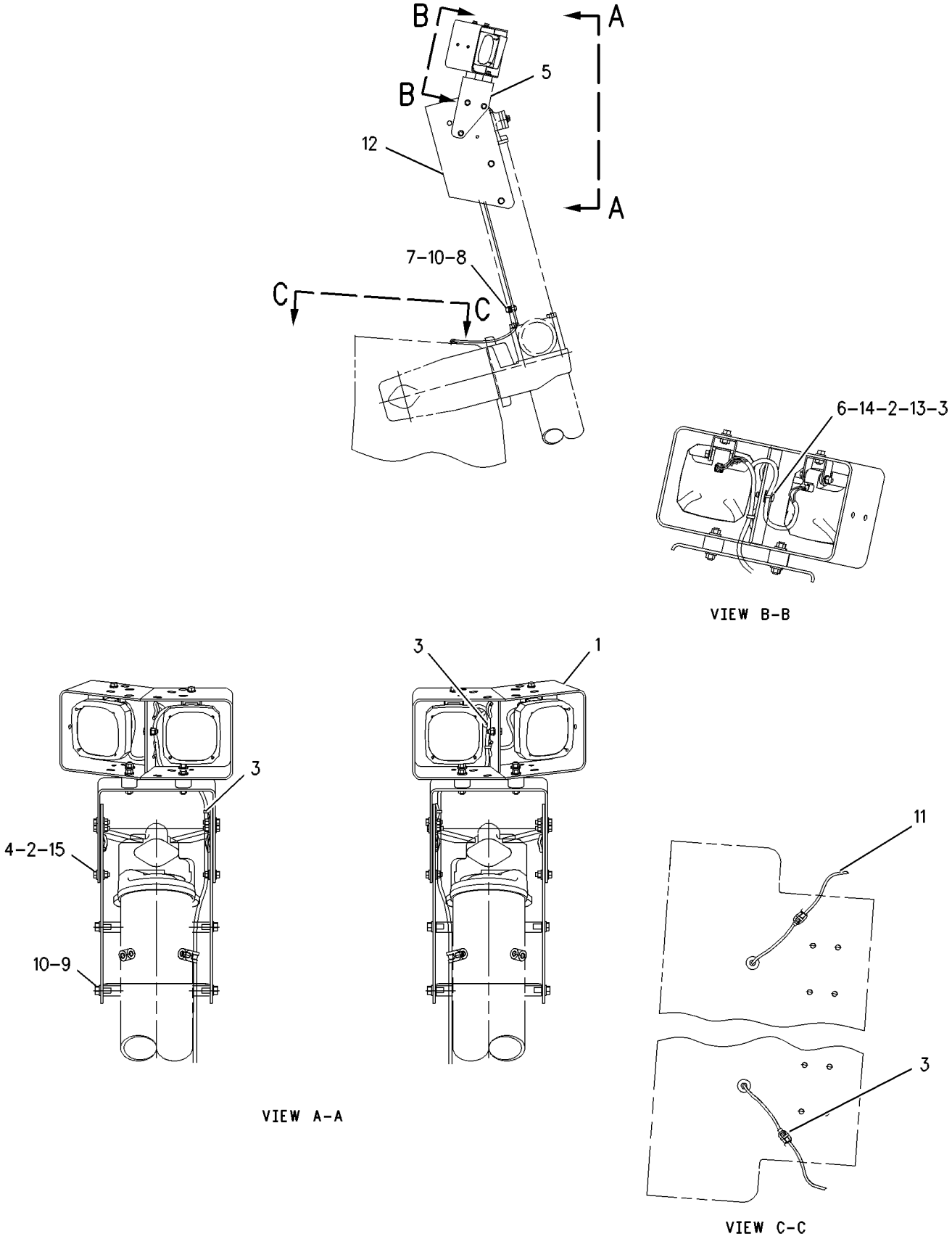

GRAPHIC #1 g00589786

102-4394 LIGHTING AR-REAR

S/N: 3KR1-UP
4 LAMP
PART OF 130-3859 WASTE HANDLING AR
AN ATTACHMENT
TYPE 1

SMCS-1429 **i01742206**

NOTE	REF NO	GRAPHIC REF	PART NUMBER	QTY	PART NAME 1 2 3 4 5 6 (PRODUCT LEVEL)	SEE PAGE
	1	1	**9X-6772**	17	STRAP-CABLE	
	2	1	**5D-7635**	2	GROMMET	
B	3	1	**1Q-1592**	1	PLATE AS	
		1	**7T-1099**	4	LINK	
	4	1	**114-9365**	2	PLATE	
	5	1	**8T-9397**	2	BOLT (3/4-10X1.25 IN)	
		1	**7X-0582**	2	WASHER-HARD (20X44.5X6MM THK)	
	6	1	**115-1888**	1	HARNESS AS (RIPPER)	
	7	1	**115-1889**	1	HARNESS AS (HEAD)	
Y	8	1	*117-1328*	2	LIGHTING GP-AUXILIARY	428
	9	1	**4L-6454**	8	BOLT (3/8-16X1 IN)	
		1	**5P-1075**	8	WASHER-HARD (10.2X22.5X3MM THK)	

B-USE AS REQUIRED
Y-SEPARATE ILLUSTRATION

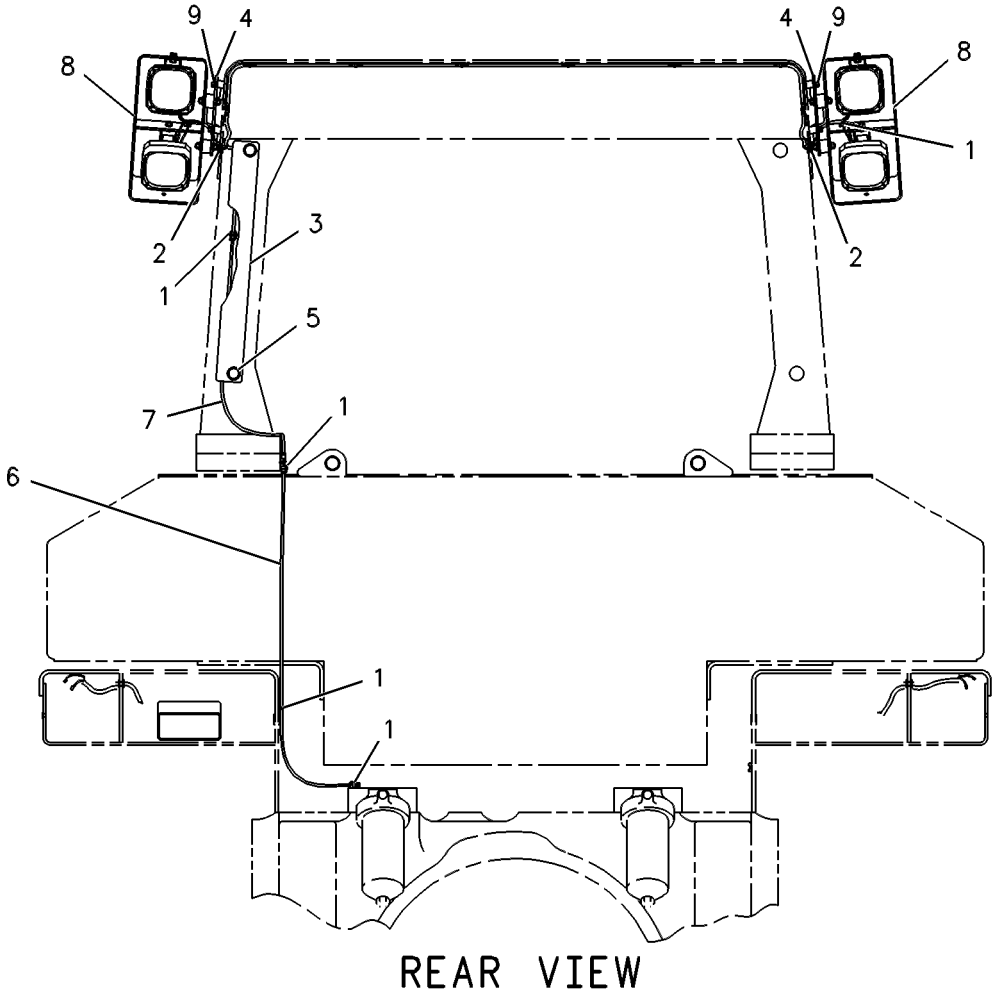

GRAPHIC #1 g00284246

102-4394 LIGHTING AR-REAR

S/N: 3KR1-UP
4 LAMP
PART OF 130-3859 WASTE HANDLING AR
AN ATTACHMENT
TYPE 2

SMCS-1429 **i01742207**

NOTE	REF NO	GRAPHIC REF	PART NUMBER	QTY	PART NAME 1 2 3 4 5 6 (PRODUCT LEVEL)	SEE PAGE
	1	1	**9X-6772**	17	STRAP-CABLE	
	2	1	**5D-7635**	2	GROMMET	
B	3	1	**1Q-1592**	1	PLATE AS	
		1	**7T-1099**	4	LINK	
	4	1	**114-9365**	2	PLATE	
	5	1	**8T-9397**	2	BOLT (3/4-10X1.25 IN)	
	6	1	**7X-0582**	2	WASHER-HARD (20X44.5X6MM THK)	
C	7	1	**153-0976**	1	HARNESS AS (HEAD)	
CY	8	1	*152-8427*	2	LIGHTING GP	426
	9	1	**4L-6454**	8	BOLT (3/8-16X1 IN)	
	10	1	**5P-1075**	8	WASHER-HARD (10.2X22.5X3MM THK)	
	11	1	**115-1889**	1	HARNESS AS (HEAD)	

B-USE AS REQUIRED
C-CHANGE FROM PREVIOUS TYPE
Y-SEPARATE ILLUSTRATION

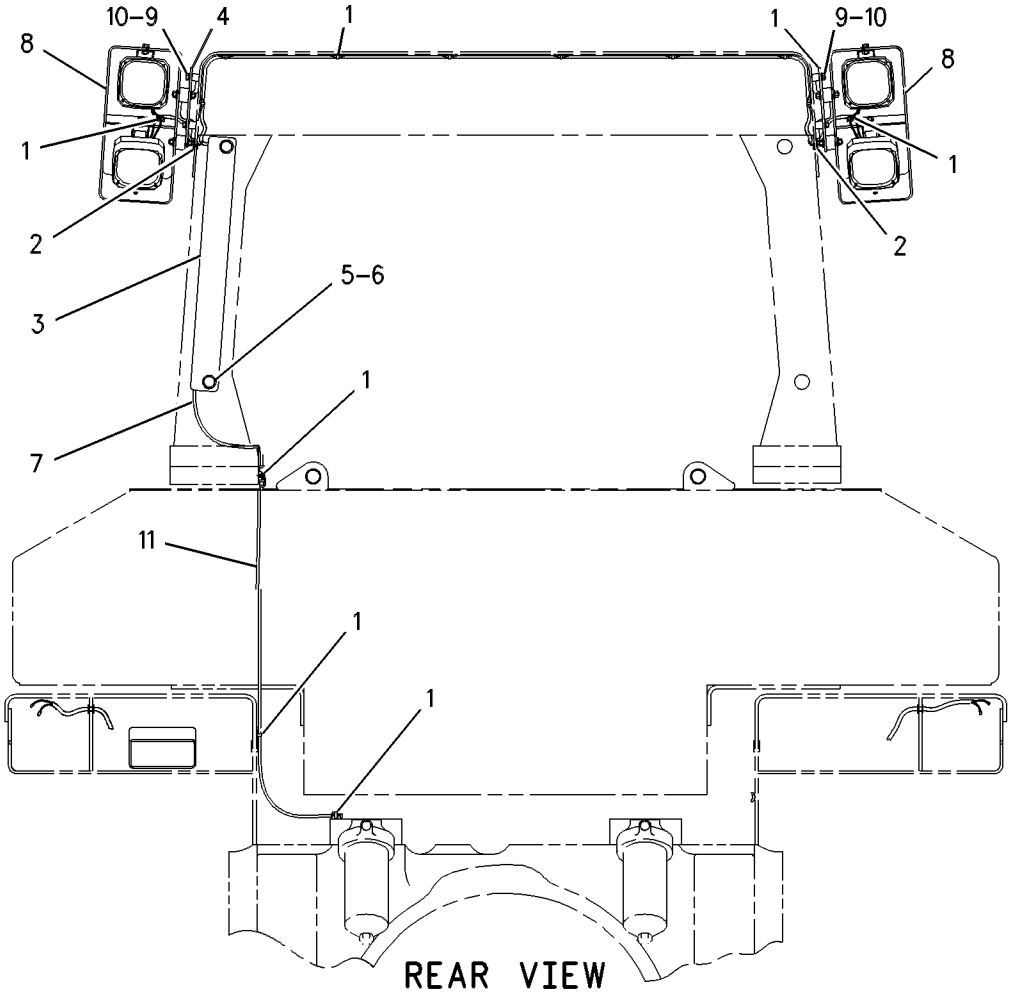

GRAPHIC #1 g00448755

ELECTRICAL AND STARTING SYSTEM

152-8427 LIGHTING GP

S/N: 3KR1-UP

PART OF 114-6009 LIGHTING AR, 102-4394 LIGHTING AR-REAR

AN ATTACHMENT

SMCS-1429 **i01401036**

NOTE	REF NO	GRAPHIC REF	PART NUMBER	QTY	PART NAME 1 2 3 4 5 6 (PRODUCT LEVEL)	SEE PAGE
	1	1	**9W-4361**	4	MOUNT	
	2	1	**8T-4896**	2	WASHER-HARD (10.2X18.5X2.5MM THK)	
	3	1	**8T-4224**	4	WASHER-HARD (8.8X16X2MM THK)	
Y	4	1	**147-0319**	2	LAMP GP-FLOOD (24 VOLT)(SUSPENDED)	418
	5	1	**5M-3062**	2	BOLT (3/8-16X.75 IN)	
	6	1	**5P-1075**	8	WASHER-HARD (10.2X22.5X3MM THK)	
	7	1	**5P-2955**	2	BOLT (5/16-18X2.50 IN)	
	8	1	**6V-8189**	2	NUT (5/16-18 THD)	
	9	1	**6V-8801**	8	NUT (3/8-16 THD)	
	10	1	**114-9363**	1	GUARD AS	
	11	1	**7T-1099**	2	LINK	
	12	1	**111-8314**	2	BRACKET AS	

Y-SEPARATE ILLUSTRATION

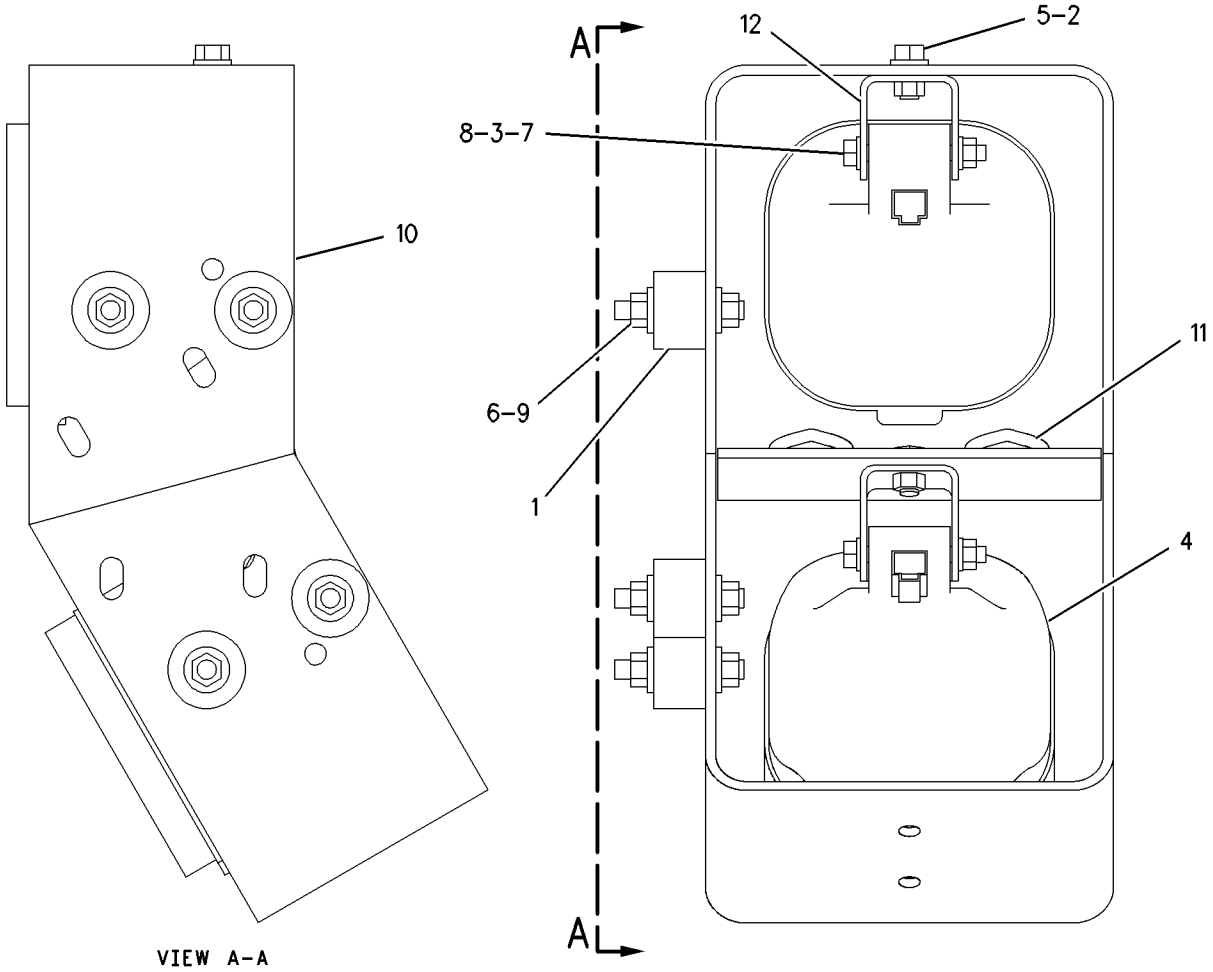

GRAPHIC #1 g00651682

ELECTRICAL AND STARTING SYSTEM

114-5992 LIGHTING GP-AUXILIARY

S/N: 4KP1-UP; 4LP1-UP; 3KR1-UP

PART OF 102-4395, 114-6006 LIGHTING GP-FRONT, 114-3107 LIGHTING GP-REAR

AN ATTACHMENT

SMCS-1429 **i01617011**

NOTE	REF NO	GRAPHIC REF	PART NUMBER	QTY	PART NAME 1 2 3 4 5 6 (PRODUCT LEVEL)	SEE PAGE
	1	1	**114-2368**	1	GUARD AS	
		1	**7T-1099**	1	LINK	
B	2	1	**6V-8801**	8	NUT (3/8-16 THD)	
	3	1	**5P-1075**	8	WASHER-HARD (10.2X22.5X3MM THK)	
	4	1	**9W-4361**	4	MOUNT	
Y	5	1	*106-8964*	1	LAMP GP-FLOOD (24 VOLT) (SUSPENDED)	415
	6	1	**5P-2955**	1	BOLT (5/16-18X2.50 IN)	
	7	1	**5M-3062**	1	BOLT (3/8-16X0.75 IN)	
	8	1	**8T-4896**	1	WASHER-HARD (10.2X18.5X2.5MM THK)	
	9	1	**111-8314**	1	BRACKET AS	
	10	1	**6V-8189**	1	NUT (5/16-18 THD)	
	11	1	**8T-4224**	2	WASHER-HARD (8.8X16X2MM THK)	

B-USE AS REQUIRED
Y-SEPARATE ILLUSTRATION

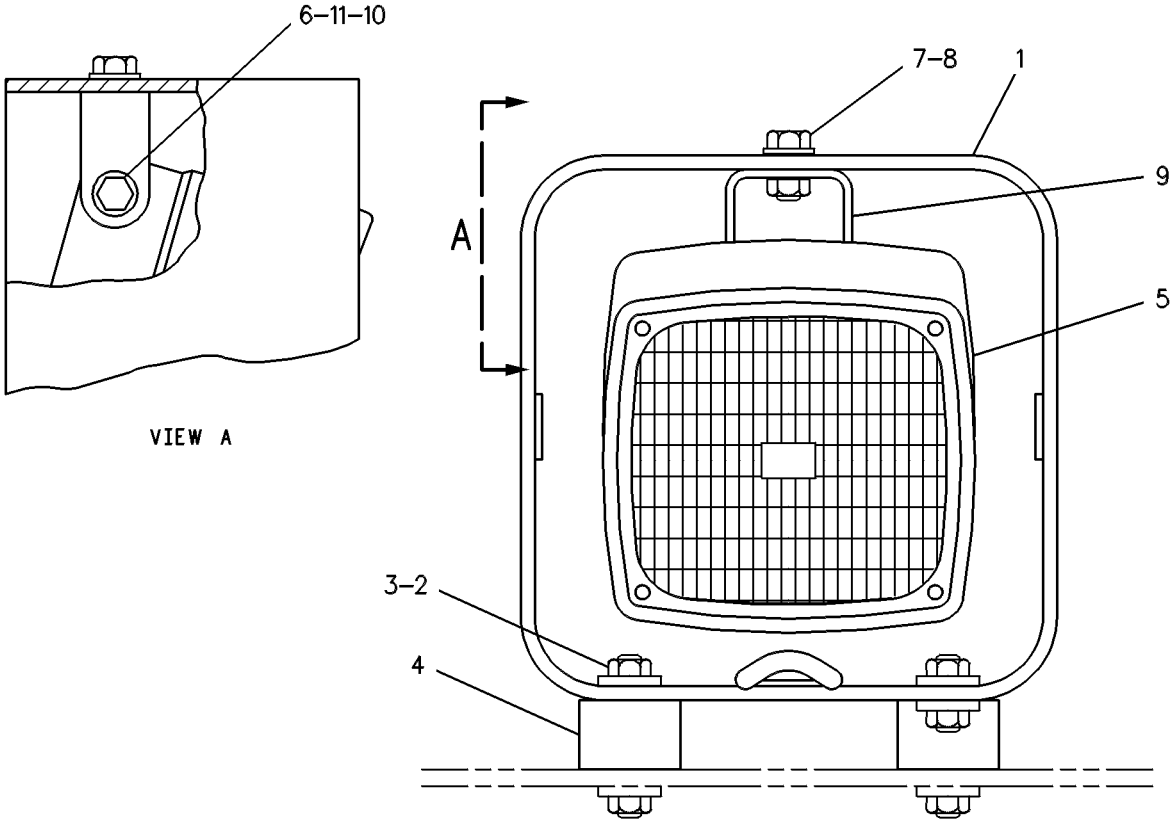

GRAPHIC #1 g00240196

ELECTRICAL AND STARTING SYSTEM

117-1328 LIGHTING GP-AUXILIARY

S/N: 3KR1-UP

PART OF 114-6009 LIGHTING AR, 102-4394 LIGHTING AR-REAR

AN ATTACHMENT

SMCS-1429 **i01357866**

NOTE	REF NO	GRAPHIC REF	PART NUMBER	QTY	PART NAME 1 2 3 4 5 6 (PRODUCT LEVEL)	SEE PAGE
	1	1	**114-9363**	1	GUARD AS	
		1	**7T-1099**	1	LINK	
	2	1	**6V-8801**	8	NUT (3/8-16 THD)	
		1	**5P-1075**	8	WASHER-HARD (3MM THK)	
	3	1	**8T-4224**	4	WASHER-HARD (8.8X16X2MM THK)	
	4	1	**9W-4361**	4	MOUNT	
Y	5	1	*106-8964*	2	LAMP GP-FLOOD (24 VOLT) (SUSPENDED)	415
	6	1	**5P-2955**	2	BOLT (5/16-18X2.50 IN)	
		1	**6V-8189**	2	NUT (5/16-18 THD)	
	7	1	**5M-3062**	2	BOLT (3/8-16X.75 IN)	
		1	**8T-4896**	2	WASHER-HARD (10.2X18.5X2.5MM THK)	
	8	1	**111-8314**	2	BRACKET AS	

Y-SEPARATE ILLUSTRATION

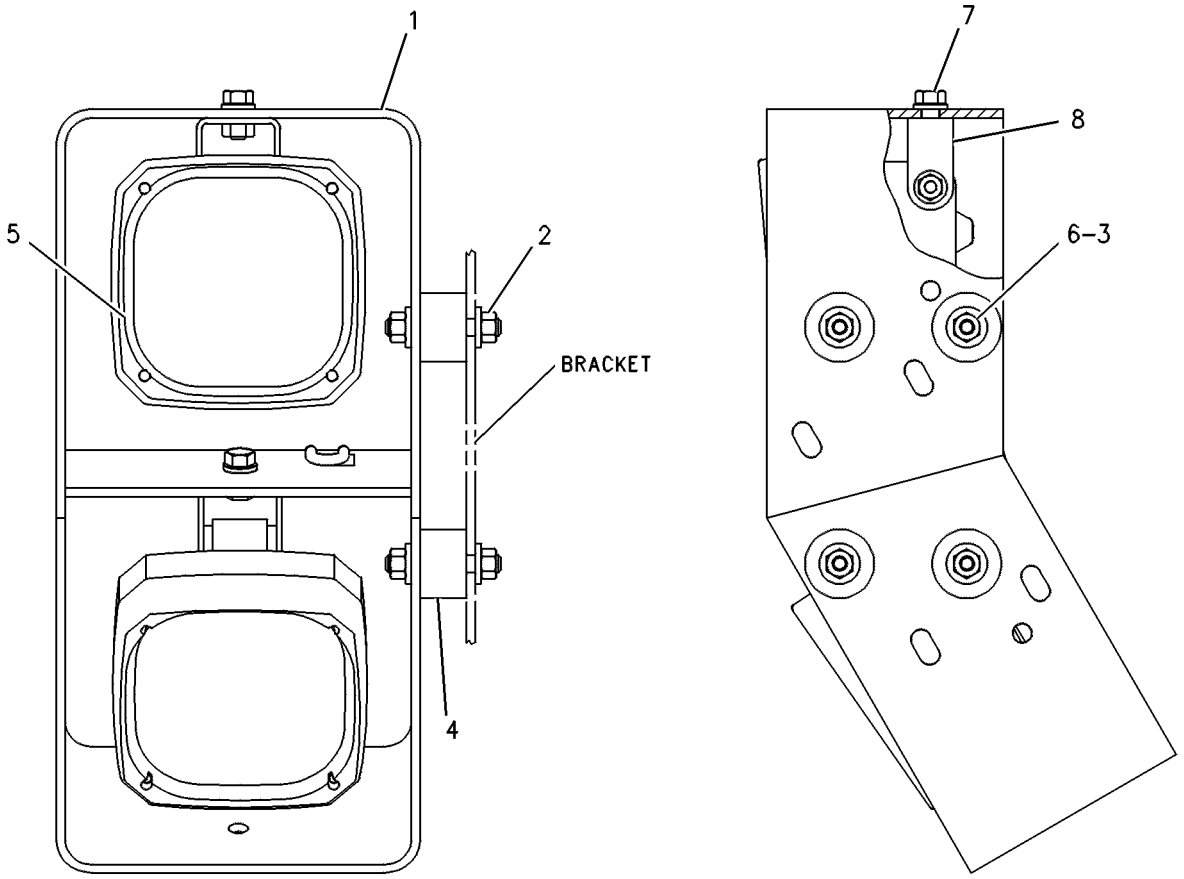

GRAPHIC #1 g00246473

125-2001 LIGHTING GP-FLOOD

S/N: 2YP1-99999; 4PP1-UP; 5LP1-99999; 3KR1-UP
PART OF 102-4395 LIGHTING GP-FRONT, 114-6005 LIGHTING GP-RIPPER
AN ATTACHMENT

SMCS-1429 **i01692366**

NOTE	REF NO	GRAPHIC REF	PART NUMBER	QTY	PART NAME 1 2 3 4 5 6 (PRODUCT LEVEL)	SEE PAGE
	1	1	**9W-4361**	4	MOUNT	
	2	1	**111-8314**	1	BRACKET AS	
		1	**1F-0750**	1	NUT-WELD (3/8-16 THD)	
	3	1	**114-2368**	1	GUARD AS	
		1	**7T-1099**	1	LINK	
Y	4	1	**133-6335**	1	LAMP GP-FLOOD (24 VOLT)(SUSPENDED)	416
	5	1	**5M-3062**	1	BOLT (3/8-16X0.75 IN)	
	6	1	**5P-1075**	9	WASHER-HARD (10.2X22.5X3MM THK)	
	7	1	**5P-2955**	1	BOLT (5/16-18X2.50 IN)	
	8	1	**6V-8189**	1	NUT (5/16-18 THD)	
	9	1	**6V-8801**	8	NUT (3/8-16 THD)	
	10	1	**8T-4224**	2	WASHER-HARD (8.8X16X2MM THK)	

Y-SEPARATE ILLUSTRATION

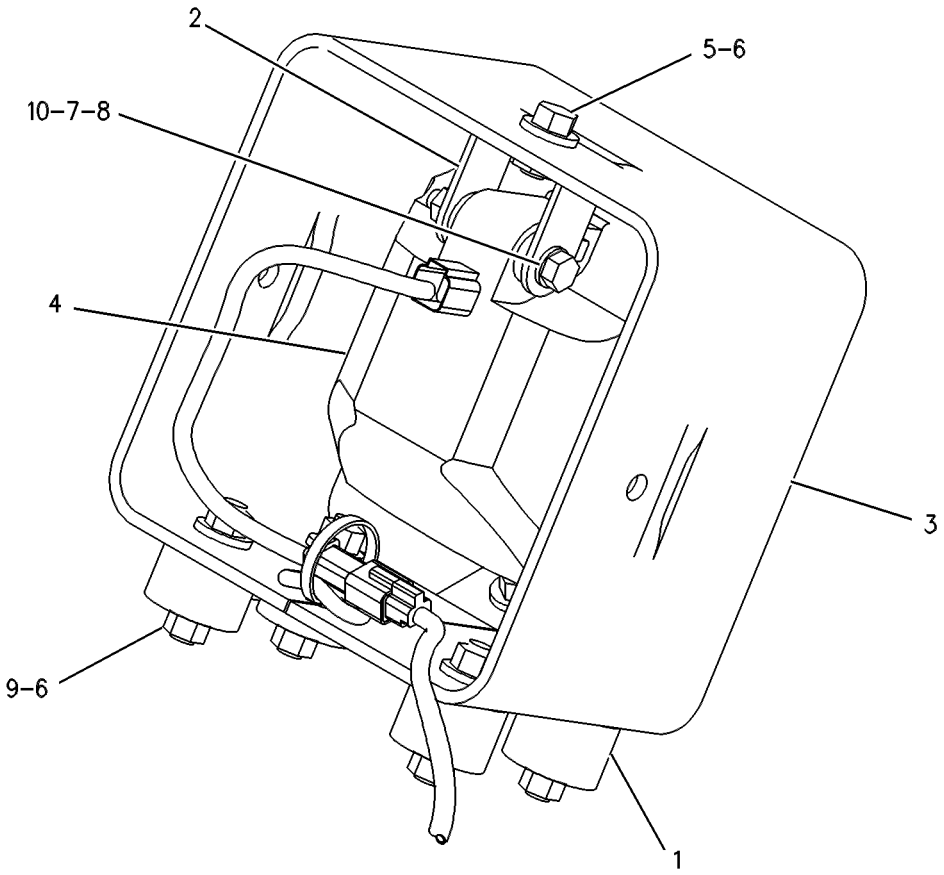

GRAPHIC #1 g00258241

125-2001 LIGHTING GP-FLOOD

S/N: 2YP1-99999; 4KP1-UP; 4LP1-UP; 4PP1-UP; 5LP1-99999; 7KP1-UP; 3KR1-UP; BRT1-UP; BEY1-UP

PART OF 102-4395, 114-6006 LIGHTING GP-FRONT, 114-3107 LIGHTING GP-REAR, 114-6005 LIGHTING GP-RIPPER

AN ATTACHMENT

SMCS-1429 **i01714235**

NOTE	REF NO	GRAPHIC REF	PART NUMBER	QTY	PART NAME 1 2 3 4 5 6 (PRODUCT LEVEL)	SEE PAGE
	1	1	**9W-4361**	4	MOUNT	
	2	1	**111-8314**	1	BRACKET AS	
		1	**1F-0750**	1	NUT-WELD (3/8-16 THD)	
Y	3	1	**147-0319**	1	LAMP GP-FLOOD (24V)(SUSPENDED)	418
	4	1	**167-1884**	1	GUARD	
	5	1	**5M-3062**	1	BOLT (3/8-16X0.75 IN)	
	6	1	**5P-1075**	9	WASHER-HARD (10.2X22.5X3MM THK)	
	7	1	**5P-2955**	1	BOLT (5/16-18X2.50 IN)	
	8	1	**6V-8189**	1	NUT (5/16-18 THD)	
	9	1	**6V-8801**	8	NUT (3/8-16 THD)	
	10	1	**8T-4224**	2	WASHER-HARD (8.8X16X2MM THK)	

Y-SEPARATE ILLUSTRATION

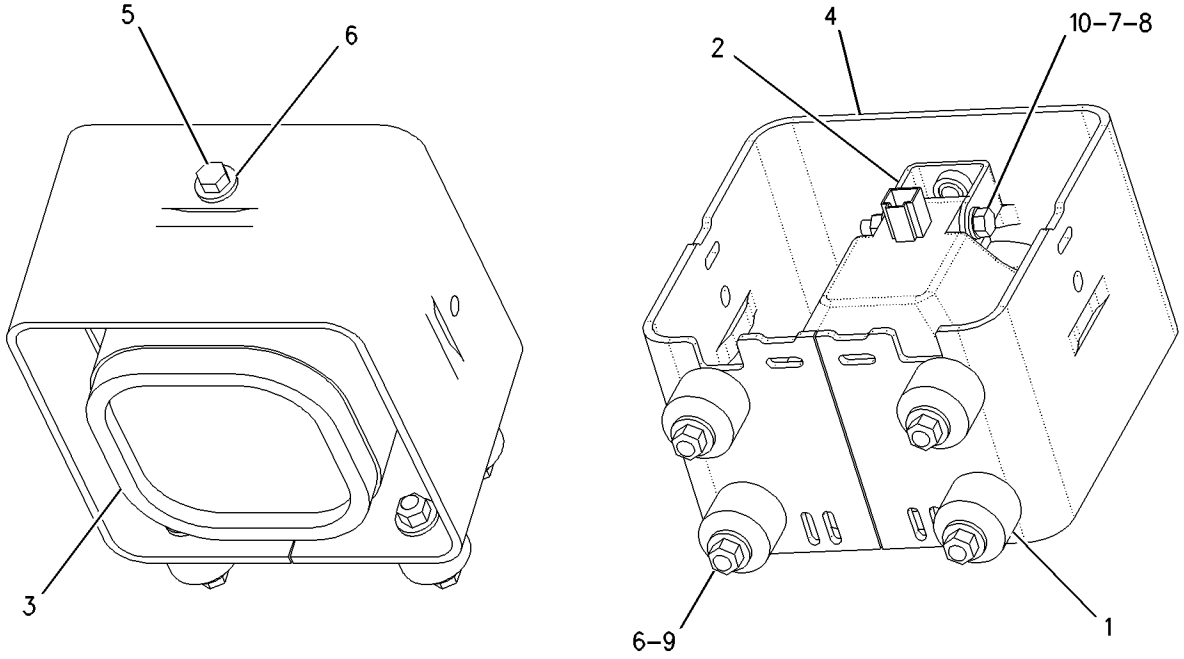

GRAPHIC #1 g00887298

ELECTRICAL AND STARTING SYSTEM

134-0978 LIGHTING GP-FLOOD

S/N: 3KR1-1112

4 LAMP

SMCS-1429 **i01335675**

NOTE	REF NO	GRAPHIC REF	PART NUMBER	QTY	PART NAME 1 2 3 4 5 6 (PRODUCT LEVEL)	SEE PAGE
Y	1	1	**133-6336**	4	LAMP GP-FLOOD (24 VOLT)(VERTICAL)	417
	2	1	**8T-4224**	8	WASHER-HARD (8.8X16X2MM THK)	
	3	1	**5P-2955**	4	BOLT (5/16-18X2.50 IN)	
	4	1	**6V-8189**	4	NUT (5/16-18 THD)	
	5	1	**8T-2502**	4	BOLT (3/8-16X1.125 IN)	
	6	1	**111-8314**	4	BRACKET AS	
					(EACH INCLUDES)	
		1	**1F-0750**	1	NUT-WELD (3/8-16 THD)	
	7	1	**5P-1075**	8	WASHER-HARD (3MM THK)	
	8	1	**5M-3062**	4	BOLT (3/8-16X.75 IN)	
	9	1	**8E-3241**	4	BRACKET AS	
					(EACH INCLUDES)	
		1	**1F-0750**	1	NUT-WELD (3/8-16 THD)	

Y-SEPARATE ILLUSTRATION

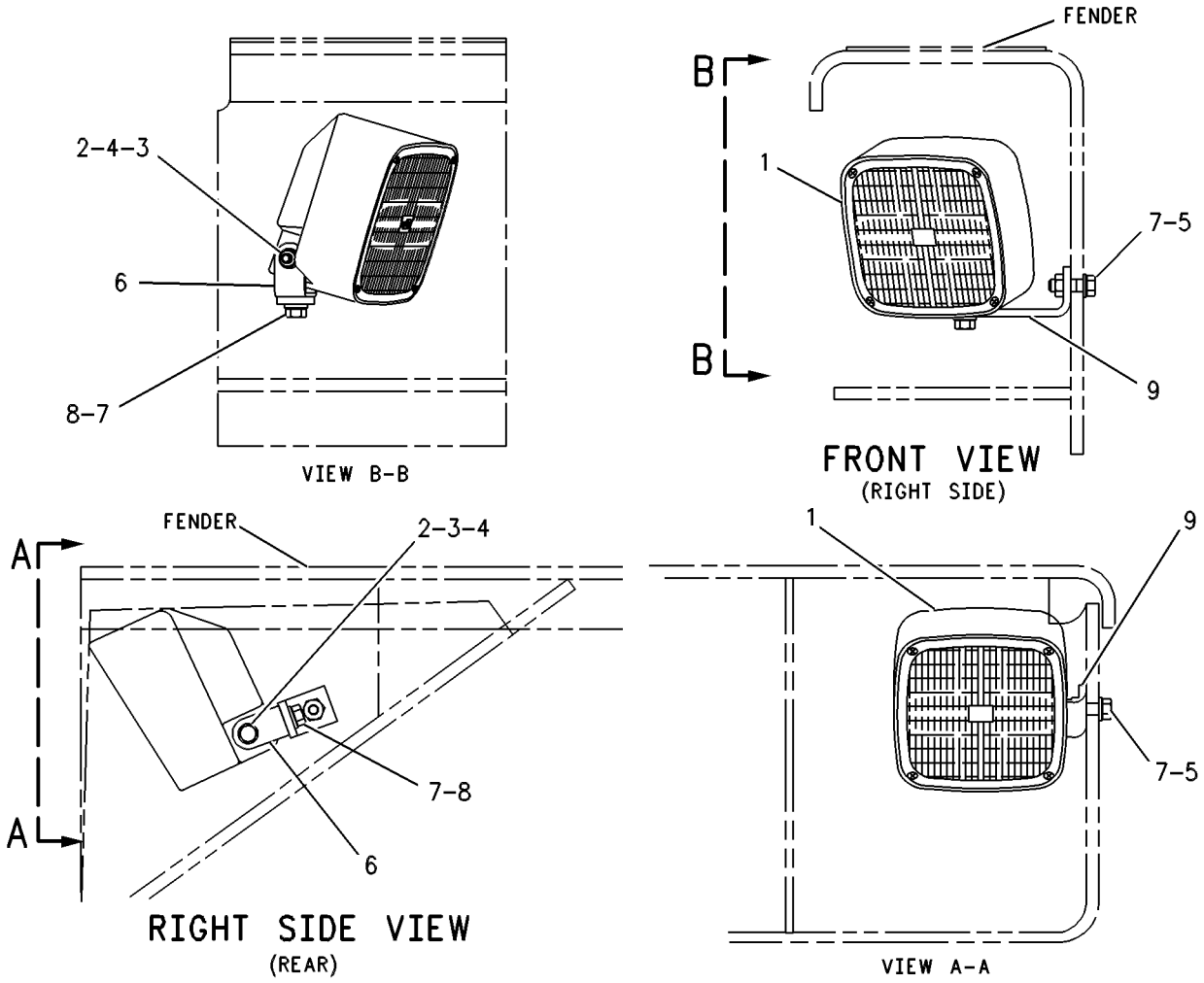

GRAPHIC #1 g00272344

ELECTRICAL AND STARTING SYSTEM

134-0978 LIGHTING GP-FLOOD

S/N: 3KR1561-1843, 11113-UP

4 LAMP

SMCS-1429 **i01446636**

NOTE	REF NO	GRAPHIC REF	PART NUMBER	QTY	PART NAME 1 2 3 4 5 6 (PRODUCT LEVEL)	SEE PAGE
CY	1	1	**153-2073**	4	LAMP GP-FLOOD (24 VOLT)(VERTICAL)	419
	2	1	**8T-4224**	8	WASHER-HARD (8.8X16X2MM THK)	
	3	1	**5P-2955**	4	BOLT (5/16-18X2.50 IN)	
	4	1	**6V-8189**	4	NUT (5/16-18 THD)	
	5	1	**5P-1075**	8	WASHER-HARD (10.2X22.5X3MM THK)	
	6	1	**5M-3062**	4	BOLT (3/8-16X0.75 IN)	
	7	1	**111-8314**	4	BRACKET AS	
	8	1	**8E-3241**	4	BRACKET AS	
					(EACH BRACKET AS INCLUDES)	
		1	**1F-0750**	1	NUT-WELD (3/8-16 THD)	
	9	1	**8T-2502**	4	BOLT (3/8-16X1.125 IN)	

C-CHANGE FROM PREVIOUS TYPE
Y-SEPARATE ILLUSTRATION

134-0978 **LIGHTING GP-FLOOD** *(contd.)* **i01446636**

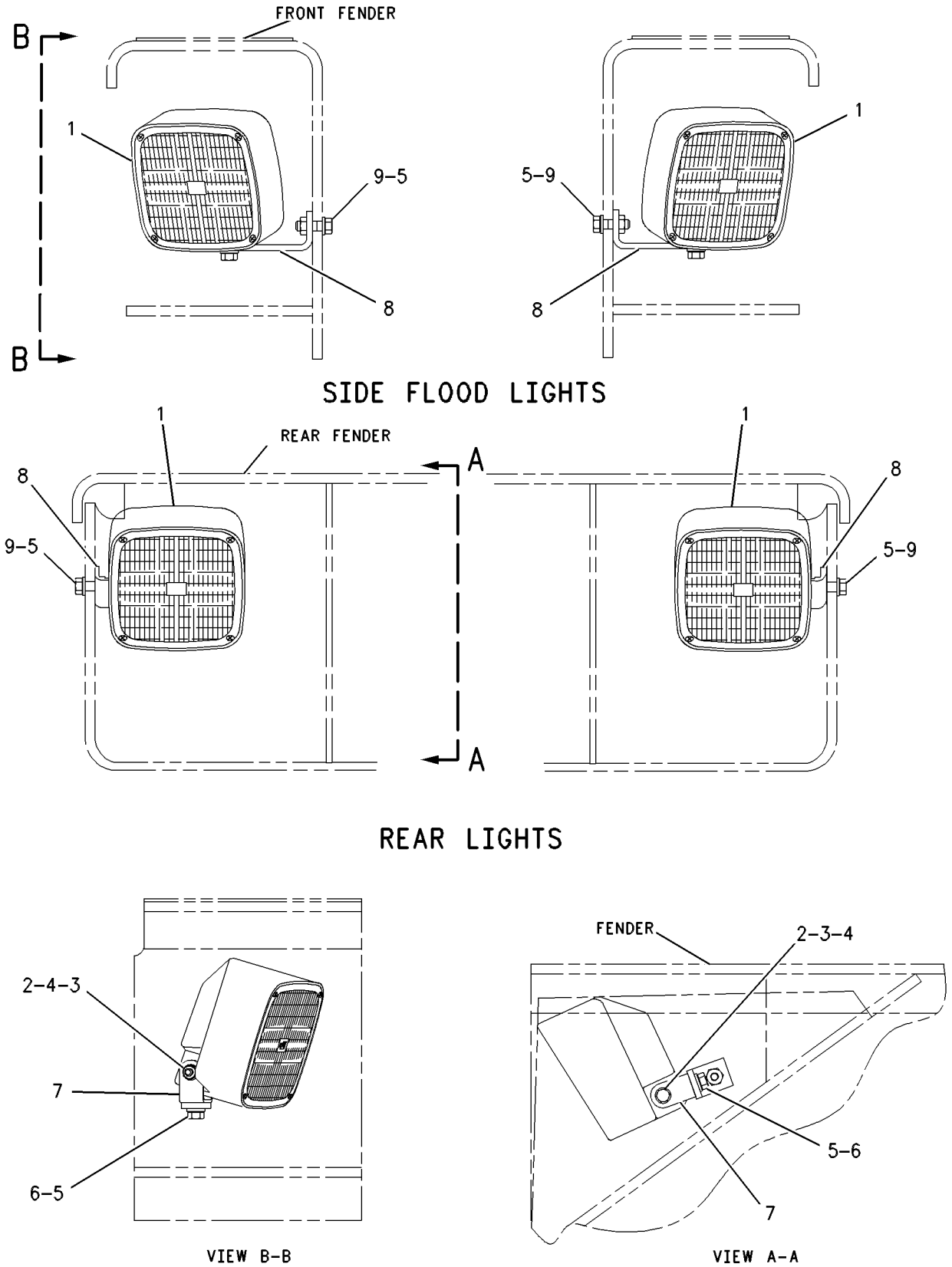

GRAPHIC #1 g00451083

102-4395 LIGHTING GP-FRONT

S/N: 3KR1-UP
2 LAMP
FOR USE WITH BULLDOZER LIFT CYLINDERS
AN ATTACHMENT
TYPE 1

SMCS-1429 **i00590014**

NOTE	REF NO	GRAPHIC REF	PART NUMBER	QTY	PART NAME 1 2 3 4 5 6 (PRODUCT LEVEL)	SEE PAGE
Y	1	1	*114-5992*	2	LIGHTING GP-AUXILIARY	427
B	2	1	**5P-8522**	2	GROMMET	
B	3	1	**9D-3768**	2	GROMMET (14.29MM ID)	
B	4	1	**5P-8522**	2	GROMMET (9.5MM ID)	

B-USE AS REQUIRED
Y-SEPARATE ILLUSTRATION

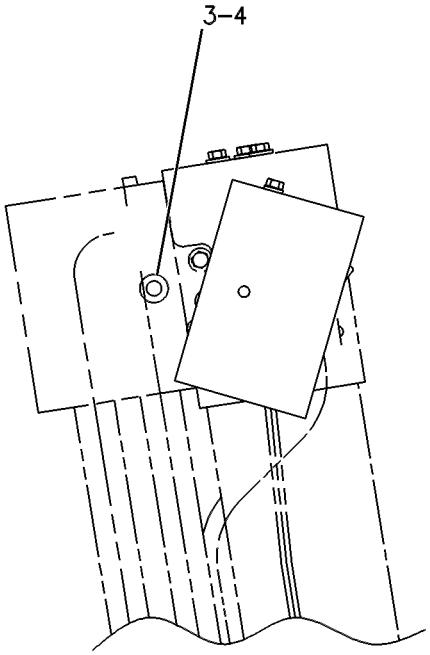

RIGHT SIDE VIEW

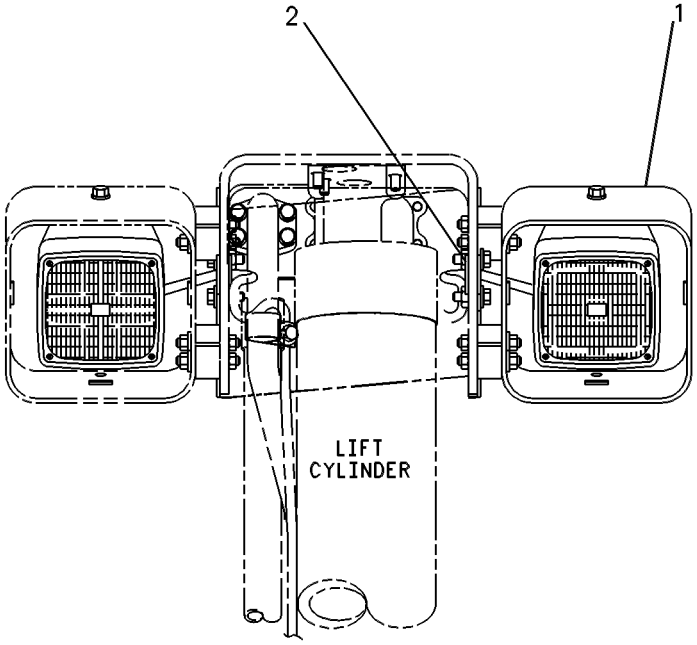

FRONT VIEW

GRAPHIC #1 g00253678

102-4395 LIGHTING GP-FRONT

S/N: 3KR1-UP
2 LAMP
FOR USE WITH BULLDOZER LIFT CYLINDERS
AN ATTACHMENT
TYPE 2

SMCS-1429 **i00899005**

NOTE	REF NO	GRAPHIC REF	PART NUMBER	QTY	PART NAME 1 2 3 4 5 6 (PRODUCT LEVEL)	SEE PAGE
YC	1	1	*114-5992*	2	LIGHTING GP-AUXILIARY	427
					(FOR USE ON D8R, D9R, & D10R)	
	2	1	**5P-8522**	2	GROMMET	
					(FOR USE ON D10R, D11R,& D11R CARRY DOZER)	
	3	1	**9D-3768**	2	GROMMET (14.29MM ID)	
					(FOR USE ON D9R)	
	4	1	**5P-8522**	2	GROMMET (9.5MM ID)	
					(FOR USE ON D8R)	
YC	5	1	*125-2001*	2	LIGHTING GP-FLOOD	429
					(FOR USE ON D11R & D11R CARRY DOZER)	
C	6	1	**9X-6772**	2	STRAP-CABLE	

C-CHANGE FROM PREVIOUS TYPE
Y-SEPARATE ILLUSTRATION

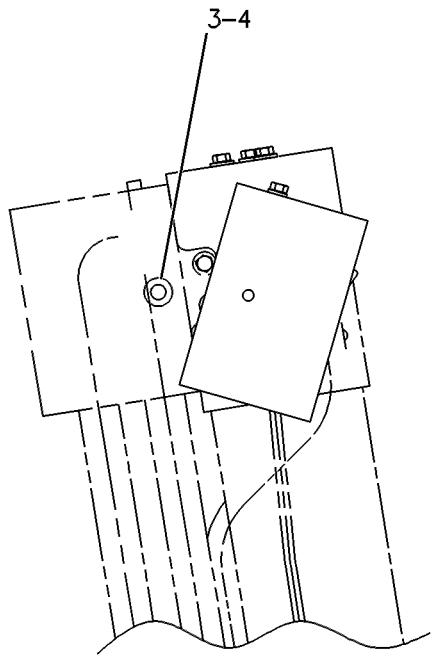

RIGHT SIDE VIEW

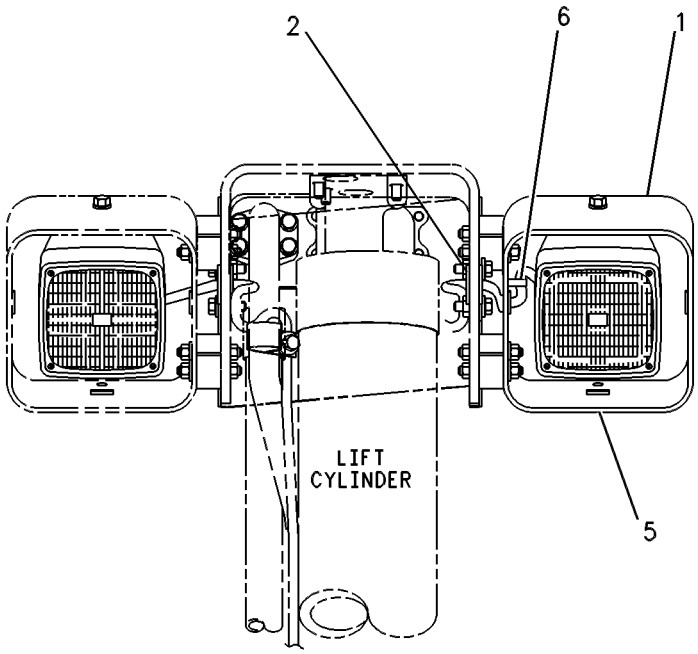

FRONT VIEW

GRAPHIC #1 g00453510

102-4395 LIGHTING GP-FRONT

S/N: 3KR1-UP
2 LAMP
FOR USE WITH BULLDOZER LIFT CYLINDERS
AN ATTACHMENT
TYPE 3

SMCS-1429 **i00899020**

NOTE	REF NO	GRAPHIC REF	PART NUMBER	QTY	PART NAME 1 2 3 4 5 6 (PRODUCT LEVEL)	SEE PAGE
	1	1	**5P-8522**	2	GROMMET	
					(FOR USE ON D10R, D11R, & D11R CARRY DOZER)	
	2	1	**9D-3768**	2	GROMMET (14.29MM ID)	
					(FOR USE ON D9R)	
	3	1	**5P-8522**	2	GROMMET (9.5MM ID)	
					(FOR USE ON D8R)	
YC	4	1	*125-2001*	2	LIGHTING GP-FLOOD	429
	5	1	**9X-6772**	2	STRAP-CABLE	

C-CHANGE FROM PREVIOUS TYPE
Y-SEPARATE ILLUSTRATION

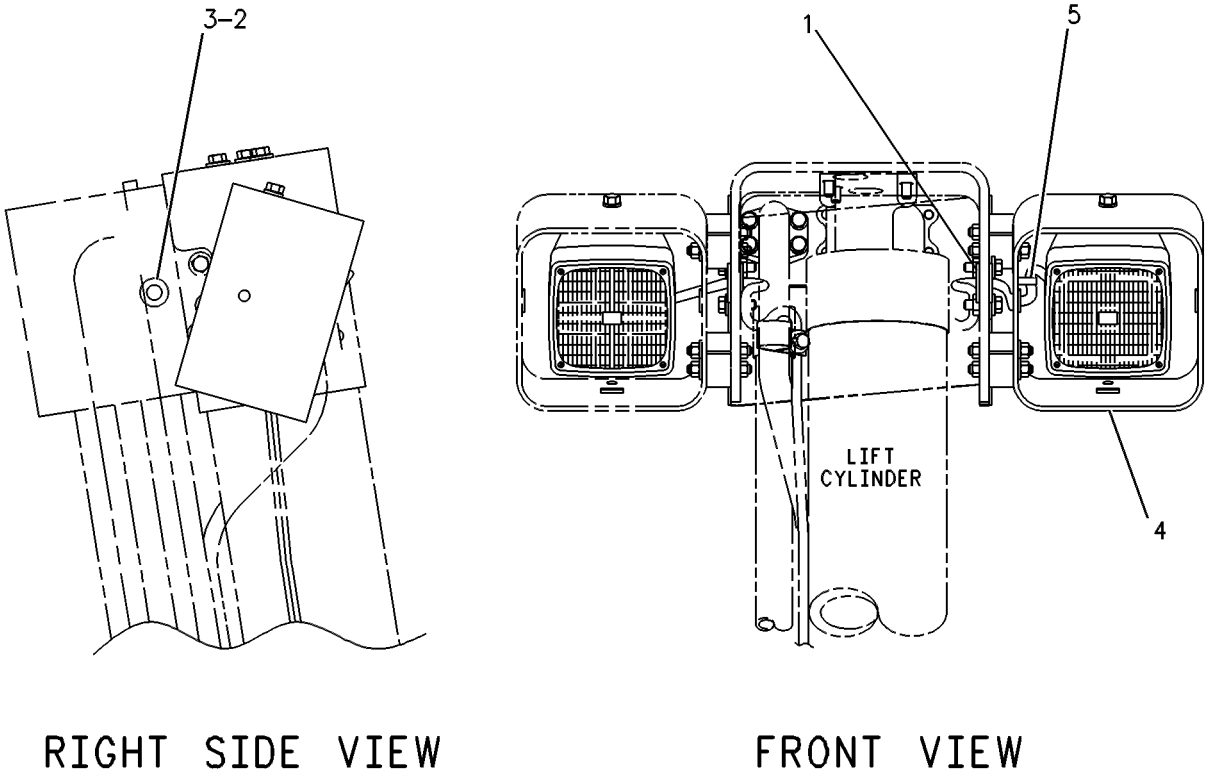

GRAPHIC #1 g00453511

114-6006 LIGHTING GP-FRONT

S/N: 4KP1-UP; 4LP1-UP; 3KR1-UP
PART OF 117-5697, 117-5698, 117-5722, 117-5723 BULLDOZER AR
FOR USE WITH BULLDOZER LIFT CYLINDERS
AN ATTACHMENT
TYPE 1

SMCS-1429 **i01742317**

NOTE	REF NO	GRAPHIC REF	PART NUMBER	QTY	PART NAME 1 2 3 4 5 6 (PRODUCT LEVEL)	SEE PAGE
Y	1	1	*114-5992*	2	LIGHTING GP-AUXILIARY	427
	2	1	**115-1250**	2	BRACKET AS	
					(EACH INCLUDES)	
		1	**7T-1099**	2	LINK	
	3	1	**9U-9015**	2	HARNESS AS	
B	4	1	**9X-6772**	10	STRAP-CABLE	
	5	1	**5P-8522**	2	GROMMET	
	6	1	**5C-6565**	8	BOLT (1/2-13X1.125 IN)	
	7	1	**8T-4223**	12	WASHER-HARD (13.5X25.5X3MM THK)	
	8	1	**4P-7428**	4	CLIP	
	9	1	**5P-2228**	4	BOLT (1/2-13X1 IN)	

B-USE AS REQUIRED
Y-SEPARATE ILLUSTRATION

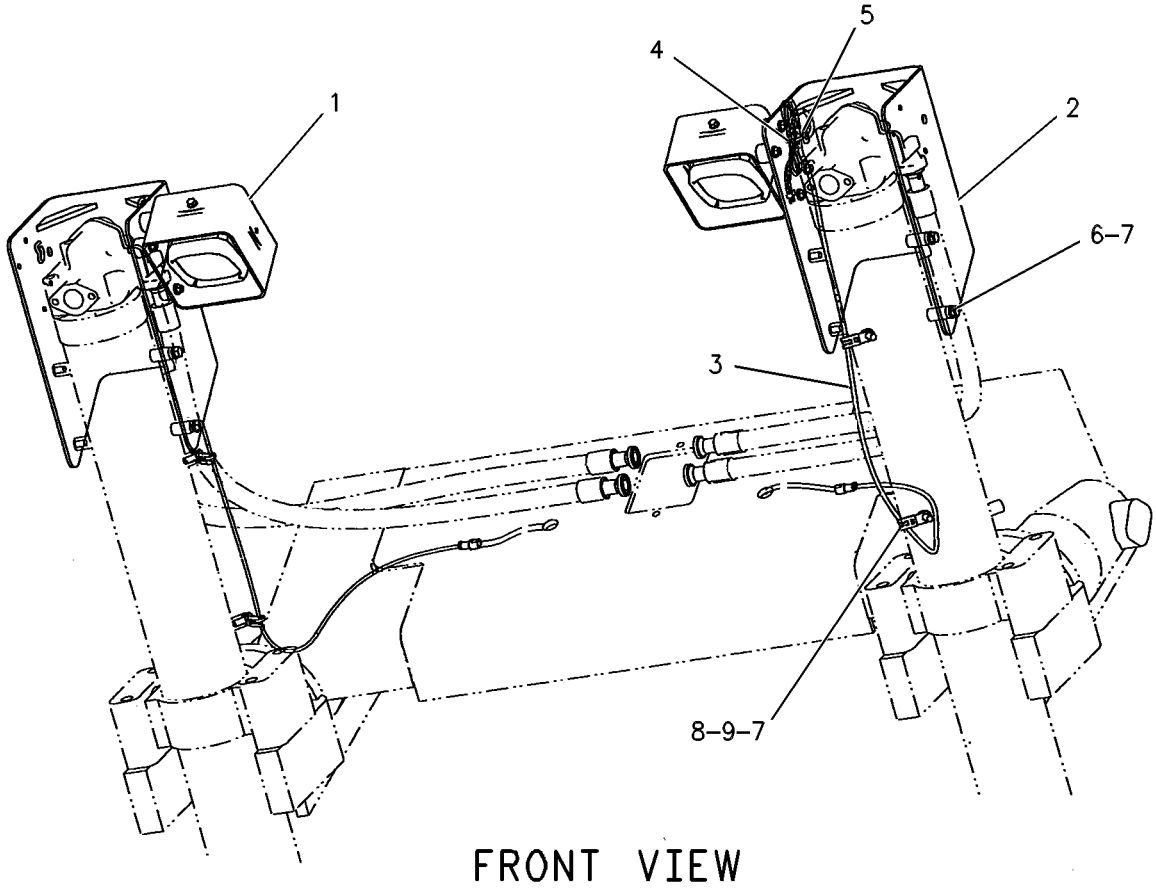

GRAPHIC #1 g00258673

ELECTRICAL AND STARTING SYSTEM

114-6006 LIGHTING GP-FRONT

S/N: 4KP1-UP; 4LP1-UP; 3KR1-UP
PART OF 117-5697, 117-5698, 117-5722, 117-5723 BULLDOZER AR
FOR USE WITH BULLDOZER LIFT CYLINDERS
AN ATTACHMENT
TYPE 2

SMCS-1429 **i01742321**

NOTE	REF NO	GRAPHIC REF	PART NUMBER	QTY	PART NAME 1 2 3 4 5 6 (PRODUCT LEVEL)	SEE PAGE
B	1	1	**9X-6772**	14	STRAP-CABLE	
	2	1	**115-1250**	2	BRACKET AS	
					(EACH INCLUDES)	
		1	**7T-1099**	2	LINK	
CY	3	1	*125-2001*	2	LIGHTING GP-FLOOD	429
C	4	1	**151-4854**	2	HARNESS AS (FRONT LAMP)	
	5	1	**4P-7428**	2	CLIP	
	6	1	**4P-7429**	2	CLIP	
	7	1	**5C-6565**	8	BOLT (1/2-13X1.125 IN)	
	8	1	**5P-2228**	4	BOLT (1/2-13X1 IN)	
	9	1	**5P-8522**	2	GROMMET	
	10	1	**8T-4223**	12	WASHER-HARD (13.5X25.5X3MM THK)	

B-USE AS REQUIRED
C-CHANGE FROM PREVIOUS TYPE
Y-SEPARATE ILLUSTRATION

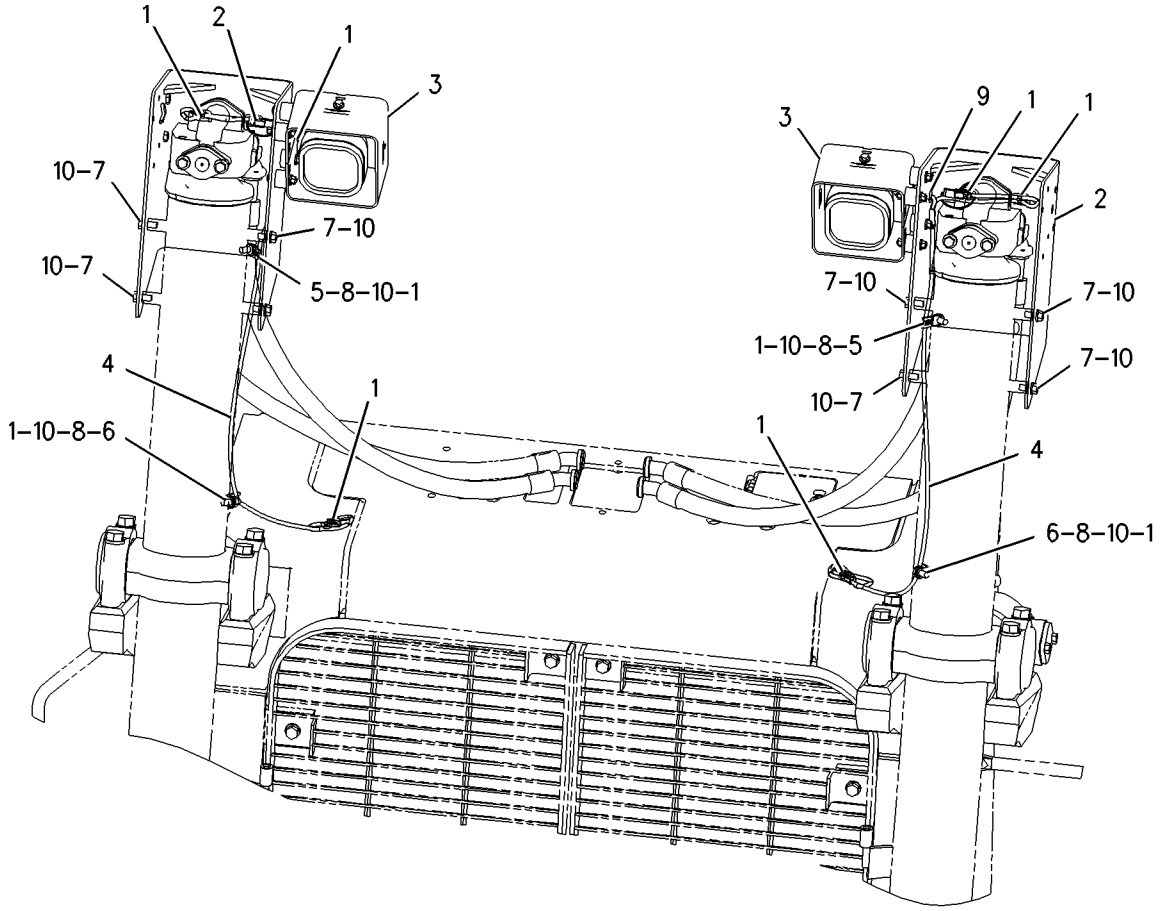

FRONT VIEW

GRAPHIC #1 g00864035

114-3107 LIGHTING GP-REAR

S/N: 3KR1-UP
2 LAMP
CANNOT BE USED WITH WASTE DISPOSAL AR
AN ATTACHMENT
TYPE 1

SMCS-1429 **i01742329**

NOTE	REF NO	GRAPHIC REF	PART NUMBER	QTY	PART NAME 1 2 3 4 5 6 (PRODUCT LEVEL)	SEE PAGE
	1	1	**9X-6772**	17	STRAP-CABLE	
	2	1	**5D-7635**	2	GROMMET	
	3	1	**1Q-1592**	1	PLATE AS	
		1	**7T-1099**	4	LINK	
	4	1	**114-9365**	2	PLATE	
	5	1	**8T-9397**	2	BOLT (3/4-10X1.25 IN)	
		1	**7X-0582**	2	WASHER-HARD (20X44.5X6MM THK)	
	6	1	**115-1888**	1	HARNESS AS (RIPPER)	
	7	1	**115-1889**	1	HARNESS AS (HEAD)	
Y	8	1	*114-5992*	2	LIGHTING GP-AUXILIARY	427
	9	1	**4L-6454**	8	BOLT (3/8-16X1 IN)	
		1	**5P-1075**	8	WASHER-HARD (10.2X22.5X3MM THK)	

Y-SEPARATE ILLUSTRATION

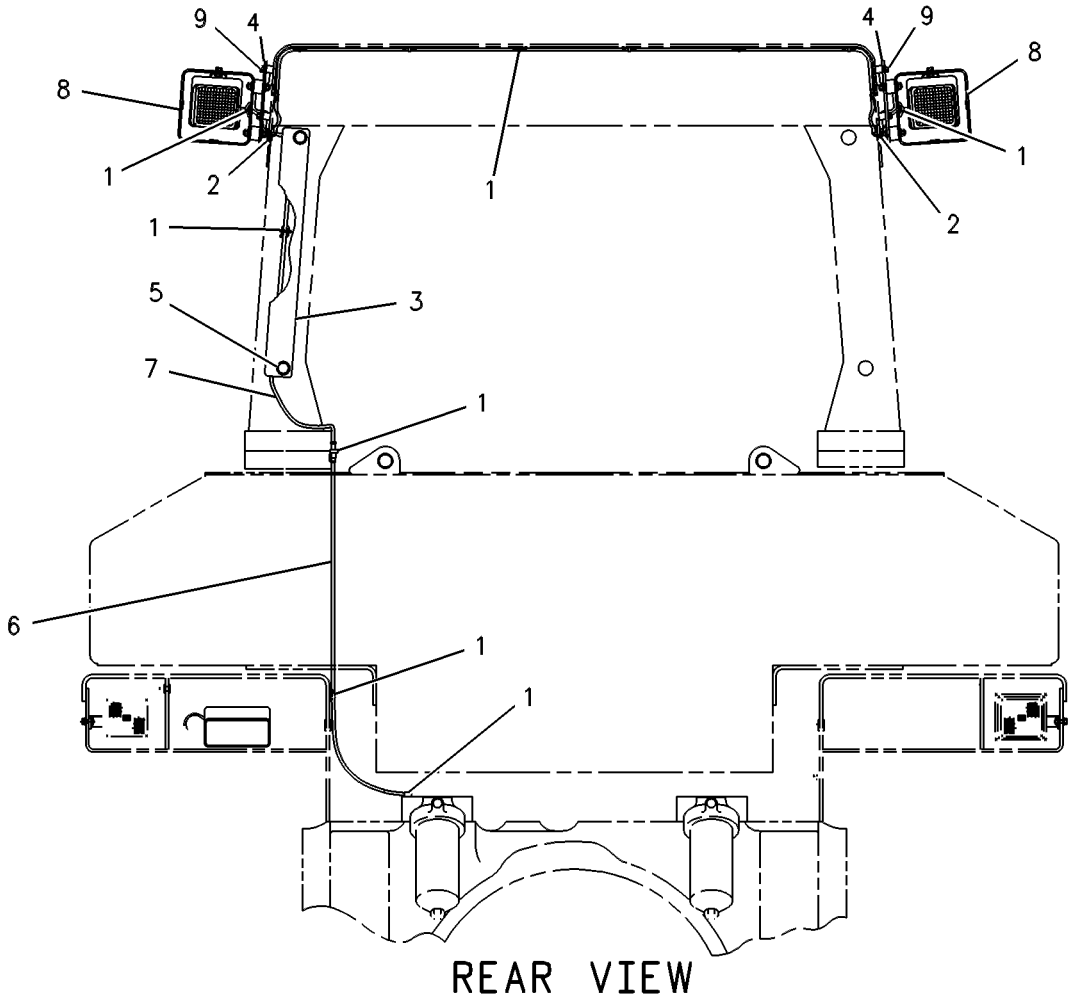

GRAPHIC #1 g00248884

114-3107 LIGHTING GP-REAR

S/N: 3KR1-UP
2 LAMP
CANNOT BE USED WITH WASTE DISPOSAL AR
AN ATTACHMENT
TYPE 2

SMCS-1429 **i01742330**

NOTE	REF NO	GRAPHIC REF	PART NUMBER	QTY	PART NAME 1 2 3 4 5 6 (PRODUCT LEVEL)	SEE PAGE
B	1	1	**7K-1181**	21	STRAP-CABLE	
	2	1	**5D-7635**	2	GROMMET	
	3	1	**1Q-1592**	1	PLATE AS	
		1	**7T-1099**	4	LINK	
	4	1	**114-9365**	2	PLATE	
	5	1	**8T-9397**	2	BOLT (3/4-10X1.25 IN)	
	6	1	**7X-0582**	2	WASHER-HARD (20X44.5X6MM THK)	
	7	1	**115-1888**	1	HARNESS AS (RIPPER)	
CY	8	1	*125-2001*	2	LIGHTING GP-FLOOD	429
	9	1	**4L-6454**	8	BOLT (3/8-16X1 IN)	
	10	1	**5P-1075**	8	WASHER-HARD (10.2X22.5X3MM THK)	
C	11	1	**153-0976**	1	HARNESS AS (FRONT)	
C	12	1	**4P-7581**	1	CLIP	
C	13	1	**5S-7379**	1	BOLT (3/8-16X0.875 IN)	
C	14	1	**8T-4896**	1	WASHER-HARD (10.2X18.5X2.5MM THK)	

B-USE AS REQUIRED
C-CHANGE FROM PREVIOUS TYPE
Y-SEPARATE ILLUSTRATION

114-3107 **LIGHTING GP-REAR** *(contd.)* **i01742330**

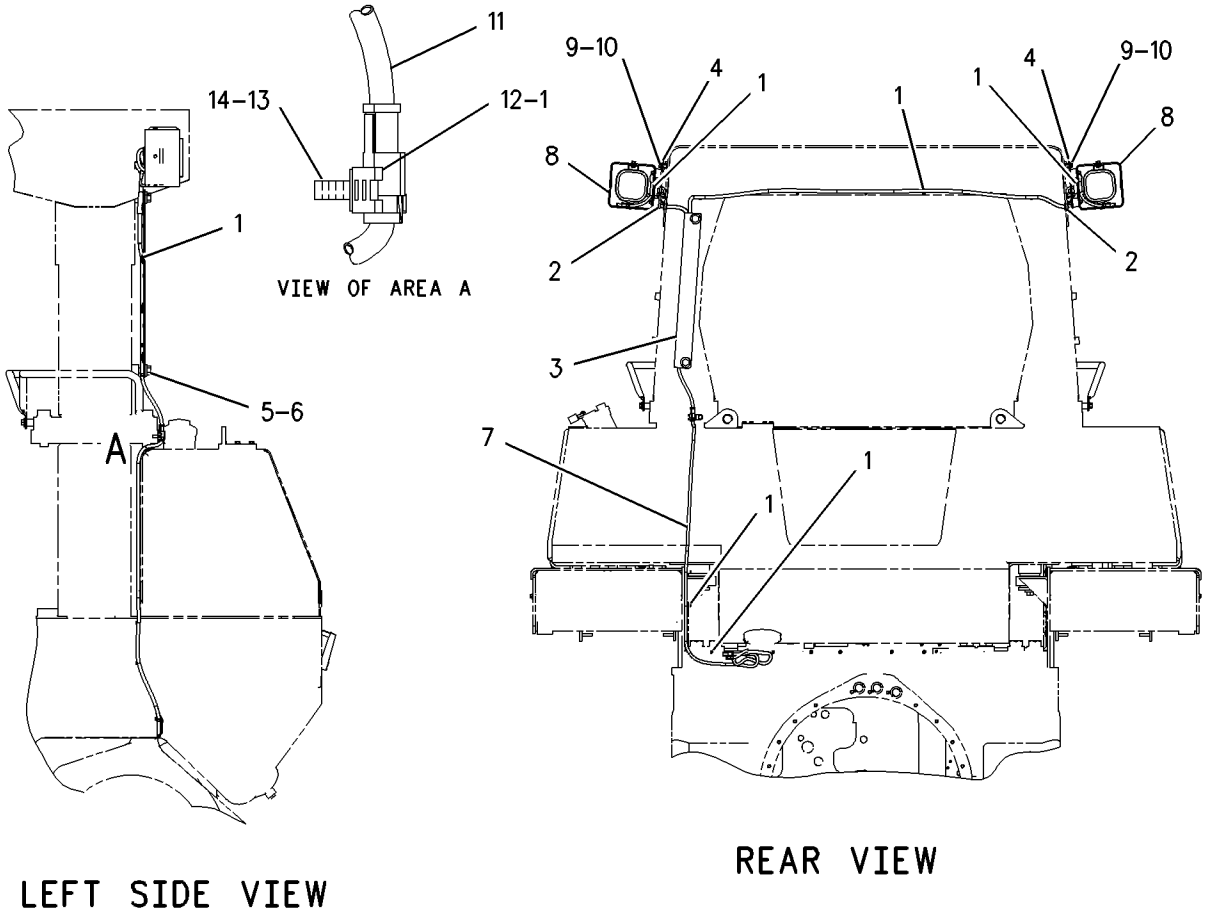

GRAPHIC #1 g00838106

114-6005 LIGHTING GP-RIPPER

S/N: 2YP1-99999; 4PP1-UP; 5LP1-99999; 7KP1-UP; 3KR1-UP; BRT1-UP; BEY1-UP
PART OF 116-2586, 119-8210, 133-0230, 152-8410, 180-2401, 180-2404 RIPPER AR
AN ATTACHMENT

SMCS-1429 **i01666355**

NOTE	REF NO	GRAPHIC REF	PART NUMBER	QTY	PART NAME 1 2 3 4 5 6 (PRODUCT LEVEL)	SEE PAGE
	1	1	**7K-1181**	7	STRAP-CABLE	
	2	1	**125-2000**	1	HARNESS AS (RIPPER)	
Y	3	1	*125-2001*	1	LIGHTING GP-FLOOD	429
	4	1	**127-9619**	1	BRACKET	
	5	1	**4L-6454**	2	BOLT (3/8-16X1 IN)	
	6	1	**4P-7581**	3	CLIP	
	7	1	**5M-3062**	1	BOLT (3/8-16X0.75 IN)	
	8	1	**8T-4896**	3	WASHER-HARD (10.2X18.5X2.5MM THK)	

Y-SEPARATE ILLUSTRATION

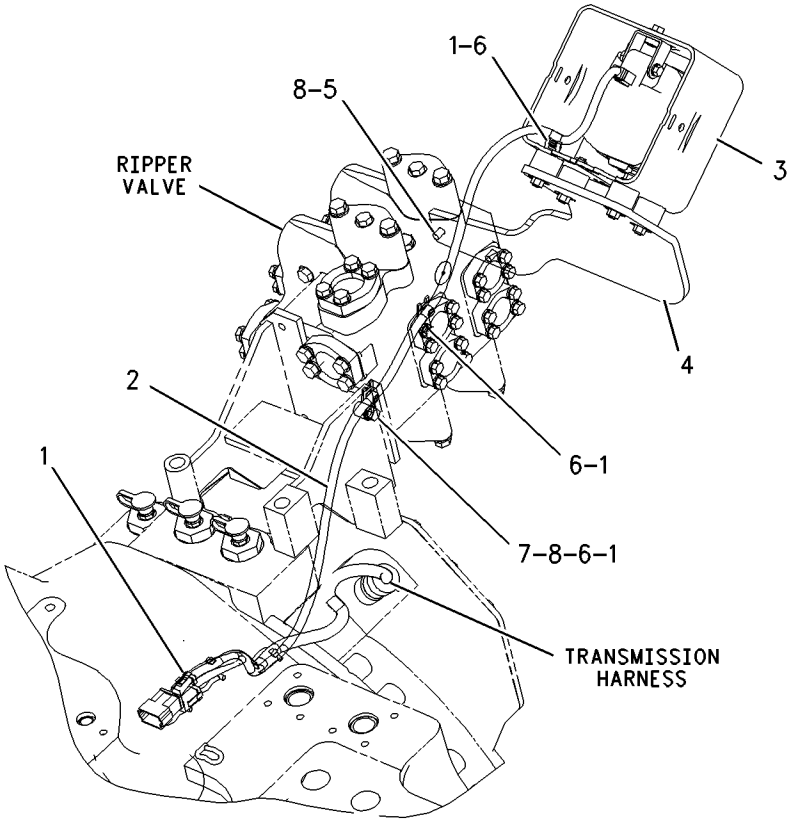

GRAPHIC #1 g00864087

128-5109 MAGNETIC PICKUP GP

S/N: 80M1-UP
PART OF 115-7641, 135-7810, 155-0058 ENGINE AR
ALSO AN ATTACHMENT

SMCS-1905 **i01232270**

NOTE	REF NO	GRAPHIC REF	PART NUMBER	QTY	PART NAME 1 2 3 4 5 6 (PRODUCT LEVEL)	SEE PAGE
	1	1	**6V-2455**	1	SENSOR GP-SPEED	
		1	**3E-3365**	1	WEDGE-RECEPTACLE LOCK	
		1	**102-8802**	1	KIT-RECEPTACLE (2 PIN)	
					(INCLUDES RECEPTACLE AS & WEDGE)	
		1	**8T-8729**	2	PIN-CONNECTOR	
BE		1	**9X-1386**		SLEEVE	
	2	1	**4N-3329**	1	WASHER (.79MM THK)	
	3	1	**1V-6341**	1	SEAL (30.15MM OD)	

B-USE AS REQUIRED
E-ORDER BY THE CENTIMETER

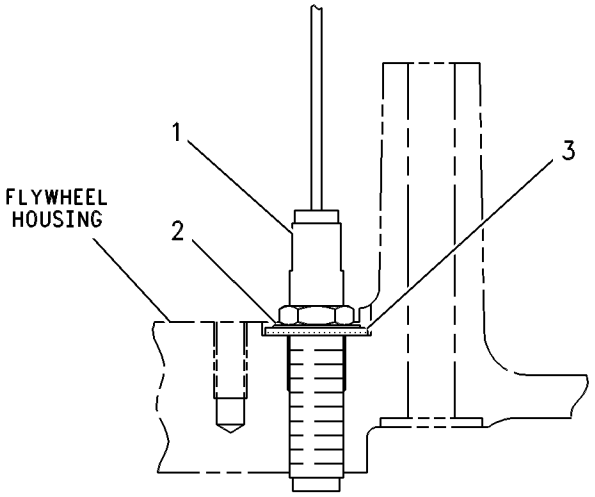

GRAPHIC #1 g00253381

130-0956 SENSOR GP-ARC SUPPRESSOR

S/N: 3KR1-UP
PART OF 116-6769 PRELUBRICATION AR-ENGINE
AN ATTACHMENT

SMCS-7000 **i01302215**

NOTE	REF NO	GRAPHIC REF	PART NUMBER	QTY	PART NAME 1 2 3 4 5 6 (PRODUCT LEVEL)	SEE PAGE
	1	1	**102-8807**	1	KIT-CONNECTING PLUG (2 PIN)	
					(INCLUDES PLUG AS & WEDGE)	
	2	1	**102-8802**	1	KIT-RECEPTACLE (2 PIN)	
					(INCLUDES RECEPTACLE AS & WEDGE)	
	3	1	**8T-8729**	2	PIN-CONNECTOR	
	4	1	**3E-3365**	1	WEDGE-RECEPTACLE LOCK (2 PIN)	
	5	1	**3E-3362**	1	WEDGE-PLUG LOCK	
	6	1	**8T-8730**	2	SOCKET-CONNECTOR	

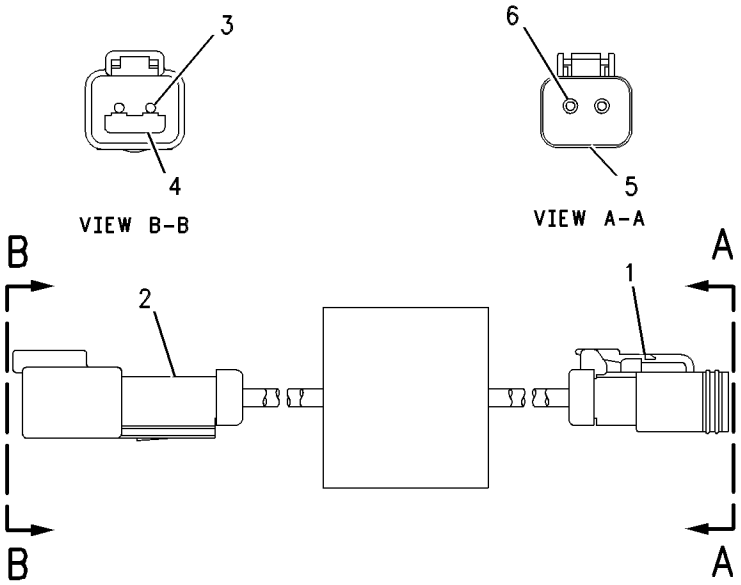

GRAPHIC #1 g00283043

124-9325 SENSOR GP-FUEL LEVEL—ULTRASONIC

S/N: 3KR1-UP

PART OF 106-8484, 109-5749 BATTERY & WIRING GP

SMCS-1273 **i01749356**

NOTE	REF NO	GRAPHIC REF	PART NUMBER	QTY	PART NAME 1 2 3 4 5 6 (PRODUCT LEVEL)	SEE PAGE
J	1	1	**102-8804**	1	KIT-RECEPTACLE (4 PIN)	
					(INCLUDES RECEPTACLE AS & PART MARKED J)	
J	2	1	**3E-3377**	1	WEDGE-RECEPTACLE LOCK	
	3	1	**8T-8729**	4	PIN-CONNECTOR	
E	4	1	**9X-1813**		SLEEVE (34CM)	

E-ORDER BY THE CENTIMETER
J-KIT MARKED J INCLUDES PART MARKED J

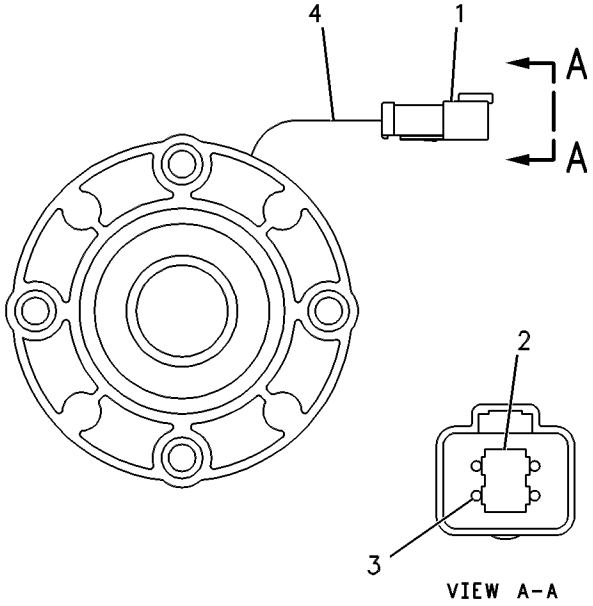

GRAPHIC #1 g00085712

3E-7700 SENSOR GP-POSITION

S/N: 3KR1-1389
PROVIDES PEDAL MOUNTED THROTTLE
PART OF 125-3420 CONTROL GP-DECELERATOR
FIELD REPLACEMENT ORDER 176-1602—PAGE 451

SMCS-1408 **i01686056**

NOTE	REF NO	GRAPHIC REF	PART NUMBER	QTY	PART NAME 1 2 3 4 5 6 (PRODUCT LEVEL)	SEE PAGE
Z	1	1			CONTROL AS-ELECTRONIC	
	2	1	**102-8803**	1	KIT-RECEPTACLE (3 PIN)	
					(INCLUDES RECEPTACLE AS & WEDGE)	
	3	1	**8T-8729**	3	PIN-CONNECTOR	

Z-NOT SERVICED SEPARATELY

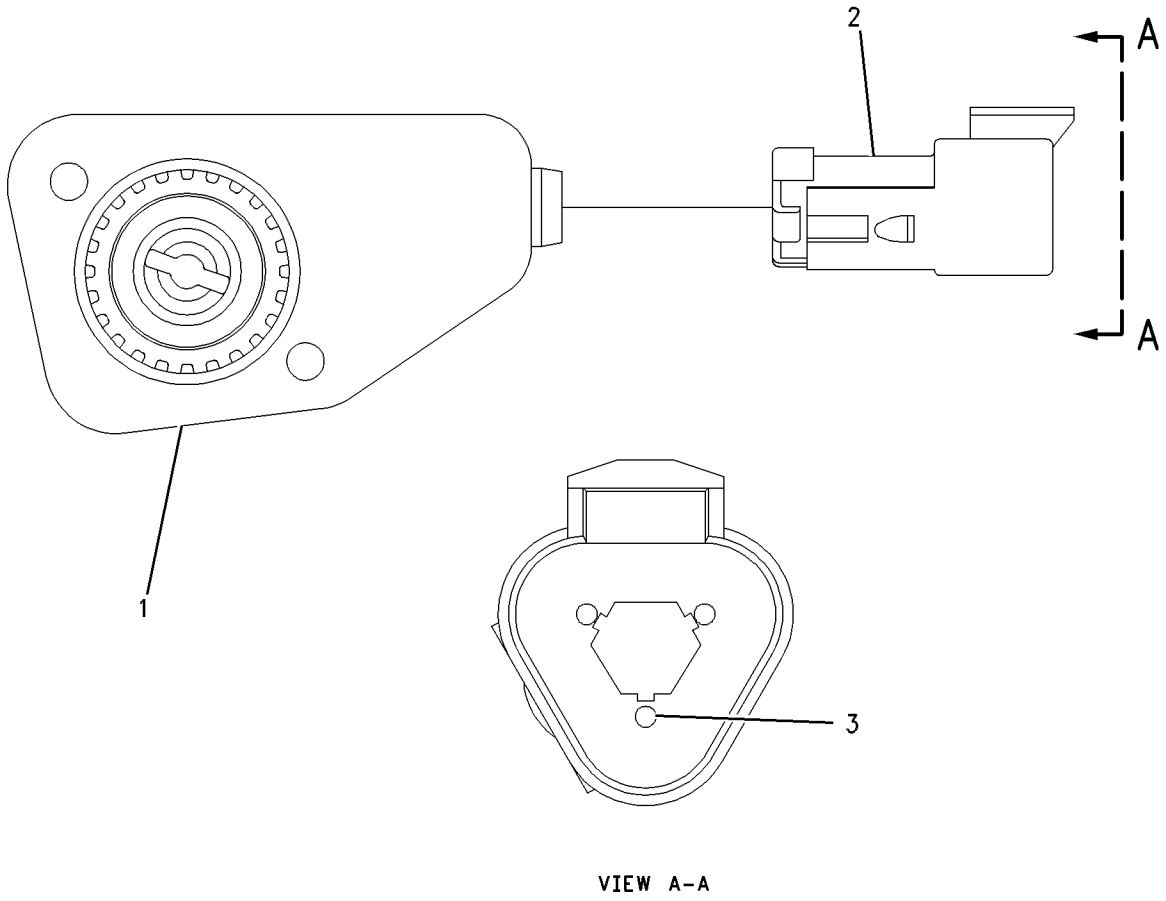

GRAPHIC #1 g00563737

9X-5592 SENSOR GP-POSITION

S/N: 3KR1-UP

PART OF 115-7411 CONTROL GP-BRAKE, 122-1512 CONTROL GP-STEERING & TMSN

SMCS-1408 **i01346169**

NOTE	REF NO	GRAPHIC REF	PART NUMBER	QTY	PART NAME 1 2 3 4 5 6 (PRODUCT LEVEL)	SEE PAGE
	1	1	**102-8803**	1	KIT-RECEPTACLE (3 PIN)	
					(INCLUDES RECEPTACLE AS & WEDGE)	
	2	1	**8T-8729**	3	PIN-CONNECTOR	

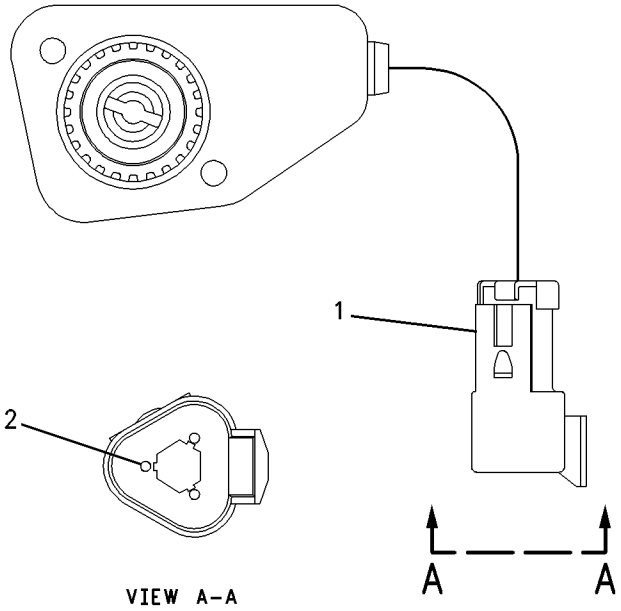

GRAPHIC #1 g00711014

106-4437 SENSOR GP-POSITION

S/N: 3KR1-UP
SPRINGLESS
PART OF 122-1512 CONTROL GP-STEERING & TMSN

SMCS-1408 **i01318690**

NOTE	REF NO	GRAPHIC REF	PART NUMBER	QTY	PART NAME 1 2 3 4 5 6 (PRODUCT LEVEL)	SEE PAGE
Z	1	1		1	SENSOR AS-POSITION (CONTROL LEVER)	
	2	1	**102-8803**	1	KIT-RECEPTACLE (3 PIN)	
					(INCLUDES RECEPTACLE AS AND WEDGE)	
	3	1	**8T-8729**	3	PIN-CONNECTOR	

Z-NOT SERVICED SEPARATELY

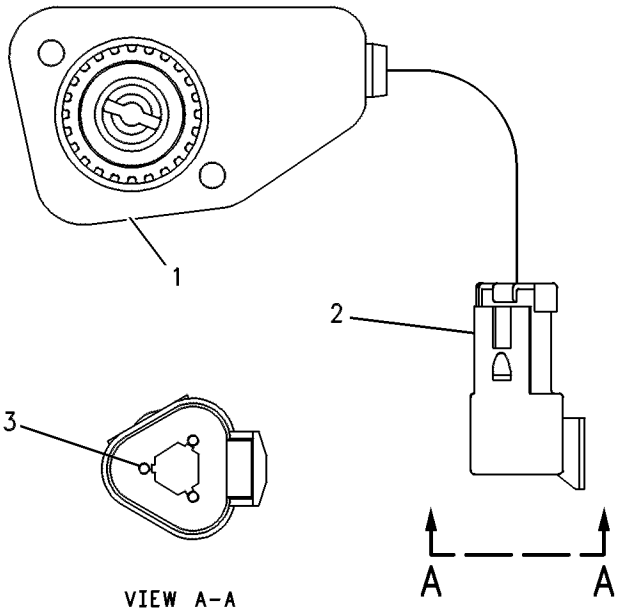

GRAPHIC #1 g00084342

147-1680 SENSOR GP-POSITION

S/N: 3KR1-UP

PART OF 115-7411 CONTROL GP-BRAKE, 122-1512 CONTROL GP-STEERING & TMSN

SMCS-1408 **i01742342**

NOTE	REF NO	GRAPHIC REF	PART NUMBER	QTY	PART NAME 1 2 3 4 5 6 (PRODUCT LEVEL)	SEE PAGE
	1	1	**102-8803**	1	KIT-RECEPTACLE (3 PIN)	
					(INCLUDES RECEPTALE AS AND WEDGE)	
	2	1	**8T-8729**	3	PIN-CONNECTOR	

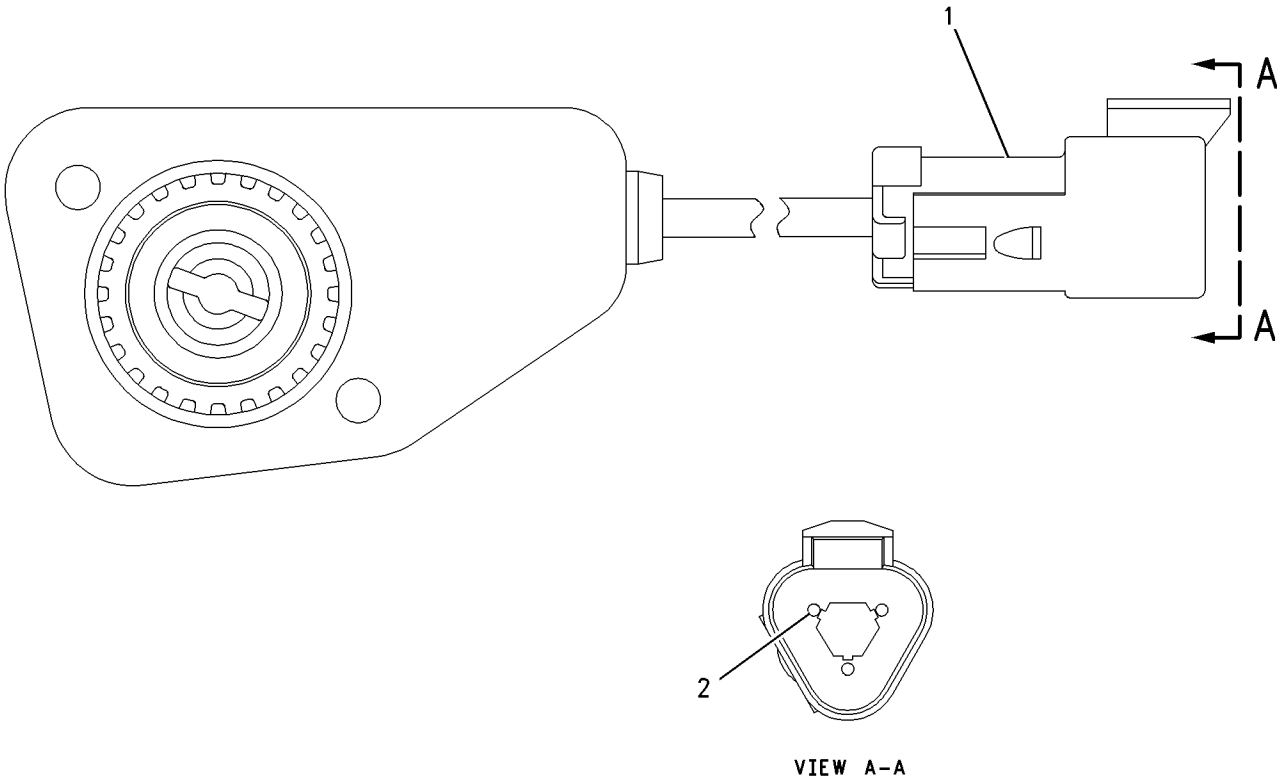

GRAPHIC #1 g00711081

161-8979 SENSOR GP-POSITION

S/N: 3KR1-UP
SPRINGLESS
PART OF 122-1512 CONTROL GP-STEERING & TMSN

SMCS-1408 **i01216799**

NOTE	REF NO	GRAPHIC REF	PART NUMBER	QTY	PART NAME 1 2 3 4 5 6 (PRODUCT LEVEL)	SEE PAGE
	1	1	**102-8803**	1	KIT-RECEPTACLE (3 PIN)	
					(INCLUDES RECEPTACLE AS & WEDGE)	
	2	1	**8T-8729**	3	PIN-CONNECTOR	
	3	1	**3E-3371**	1	WEDGE-RECEPTACLE LOCK	

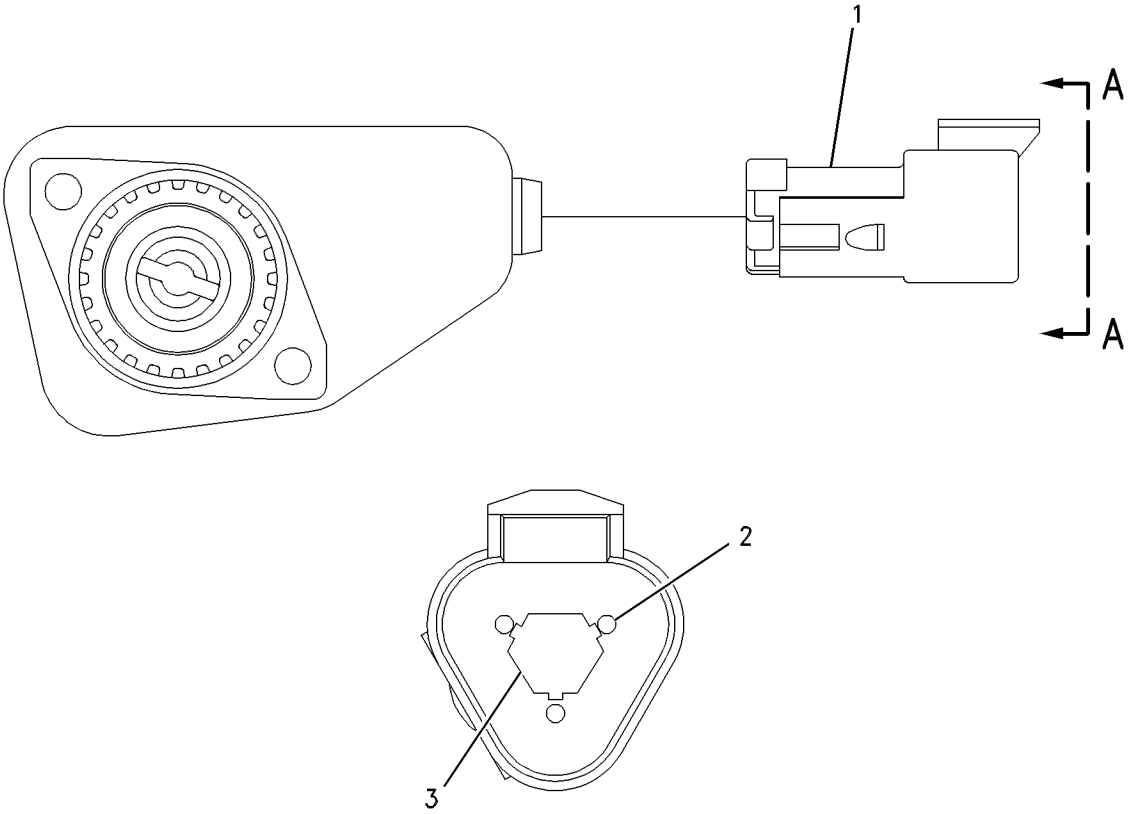

GRAPHIC #1 g00550816

176-1602 SENSOR GP-POSITION

S/N: 3KR1390-1748
ROTARY, PROVIDES PEDAL MOUNTED CONTROL
PART OF 125-3420 CONTROL GP-DECELERATOR
FIELD REPLACEMENT ORDER 204-7949—PAGE 452. FIELD REPLACEMENT FOR 3E-7700—PAGE 446

SMCS-1408 **i01749464**

NOTE	REF NO	GRAPHIC REF	PART NUMBER	QTY	PART NAME 1 2 3 4 5 6 (PRODUCT LEVEL)	SEE PAGE
	2	1	**102-8803**	1	KIT-RECEPTACLE (3 PIN)	
					(INCLUDES RECEPTACLE AS & WEDGE)	
	3	1	**186-3735**	3	PIN-CONNECTOR	
	4	1	**3E-3371**	1	WEDGE-RECEPTACLE LOCK (3 PIN)	

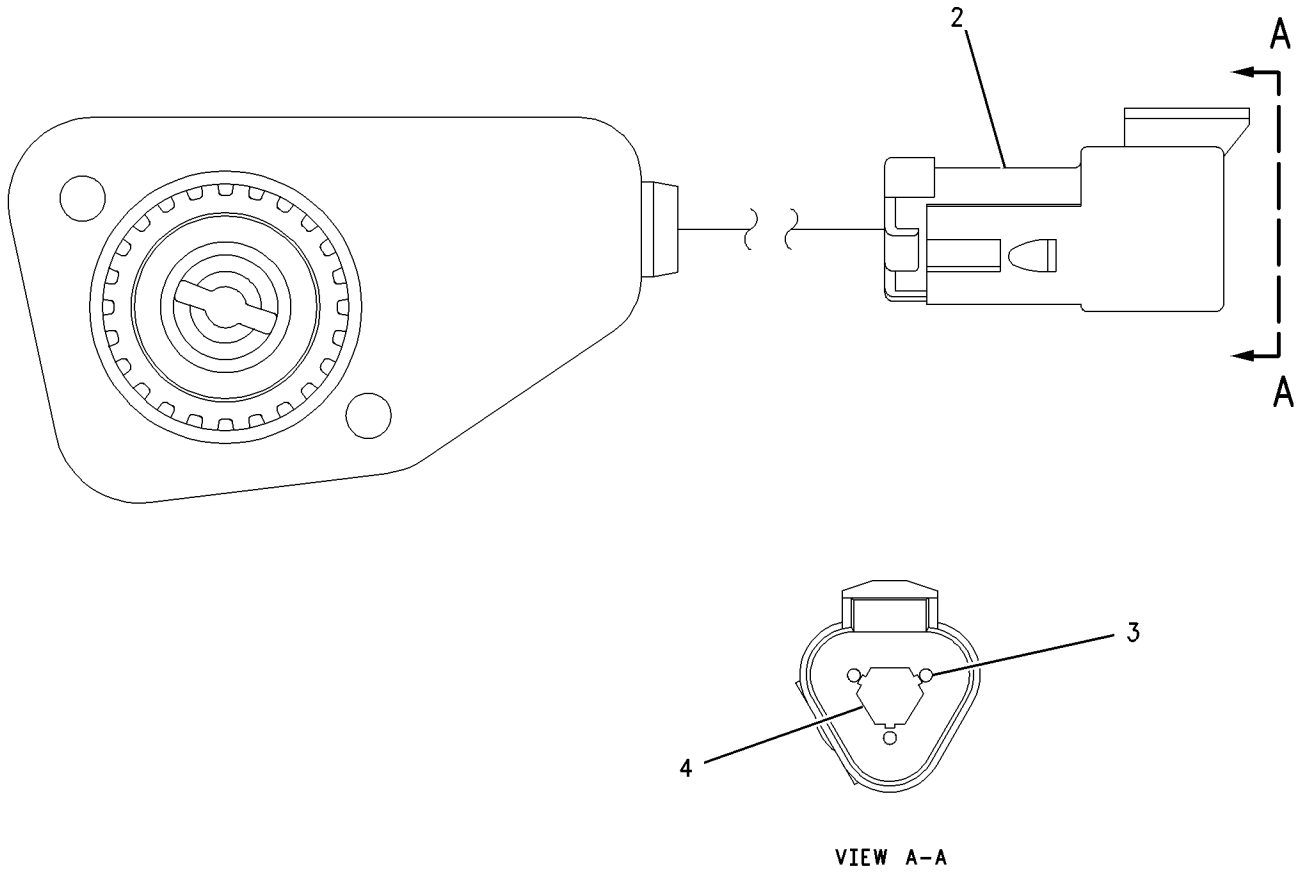

GRAPHIC #1 g00848360

204-7949 SENSOR GP-POSITION

S/N: 3KR1749-UP
PART OF 125-3420 CONTROL GP-DECELERATOR
FIELD REPLACEMENT FOR 176-1602—PAGE 451

SMCS-1408 **i01745345**

NOTE	REF NO	GRAPHIC REF	PART NUMBER	QTY	PART NAME 1 2 3 4 5 6 (PRODUCT LEVEL)	SEE PAGE
	1	1	**102-8803**	1	KIT-RECEPTACLE (3 PIN)	
					(INCLUDES RECEPTACLE AS & WEDGE)	
	2	1	**3E-3371**	1	WEDGE-RECEPTACLE LOCK (3 PIN)	
	3	1	**186-3735**	3	PIN-CONNECTOR	

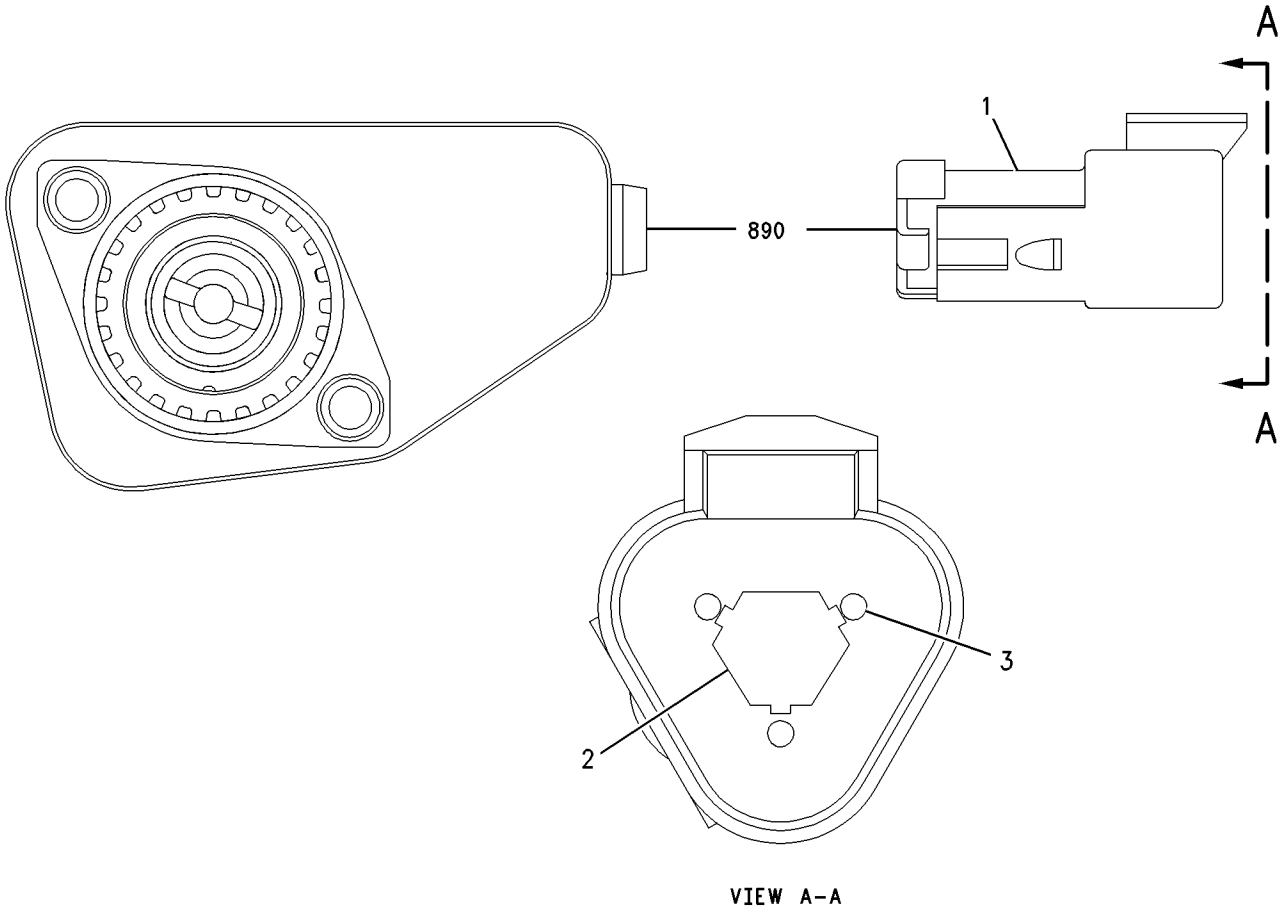

GRAPHIC #1 g00854948

6V-2485 SENSOR GP-PRESSURE

S/N: 80M1-485, 599-698
PART OF 127-3513 CYLINDER HEAD GP
ALSO AN ATTACHMENT

SMCS-1408 **i01354784**

NOTE	REF NO	GRAPHIC REF	PART NUMBER	QTY	PART NAME 1 2 3 4 5 6 (PRODUCT LEVEL)	SEE PAGE
E	1	1	**9X-1813**		SLEEVE (31CM)	
	2	1	**102-8808**	1	KIT-CONNECTING PLUG (3 PIN)	
					(INCLUDES PLUG AS & WEDGE)	
	3	1	**3E-3368**	1	WEDGE-PLUG LOCK	
	4	1	**8T-8730**	3	SOCKET-CONNECTOR	
	5	1	**102-8813**	1	SEAL-INTERFACE	

E-ORDER BY THE CENTIMETER

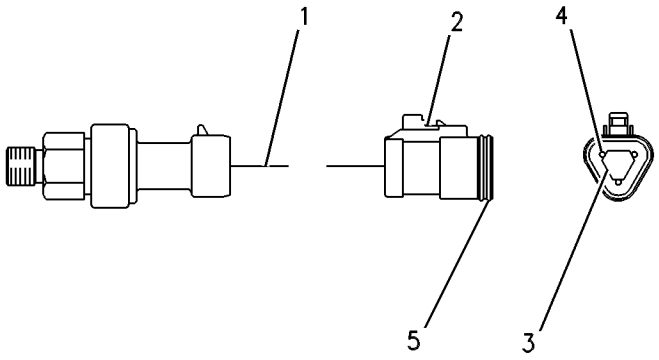

GRAPHIC #1 g00086496

103-6092 SENSOR GP-PRESSURE

S/N: 80M1-2772
PART OF 126-7292 PUMP & MTG GP-UNIT INJ HYD
ALSO AN ATTACHMENT

SMCS-1408 **i01335681**

NOTE	REF NO	GRAPHIC REF	PART NUMBER	QTY	PART NAME 1 2 3 4 5 6 (PRODUCT LEVEL)	SEE PAGE
E	1	1	**9X-1813**		SLEEVE (34CM)	
	2	1	**102-8808**	1	KIT-CONNECTING PLUG (3 PIN)	
					(INCLUDES PLUG AS AND WEDGE)	
		1	**102-8813**	1	SEAL-INTERFACE	
	3	1	**8T-8730**	3	SOCKET-CONNECTOR	
	4	1	**3E-3368**	1	WEDGE-PLUG LOCK	

E-ORDER BY THE CENTIMETER

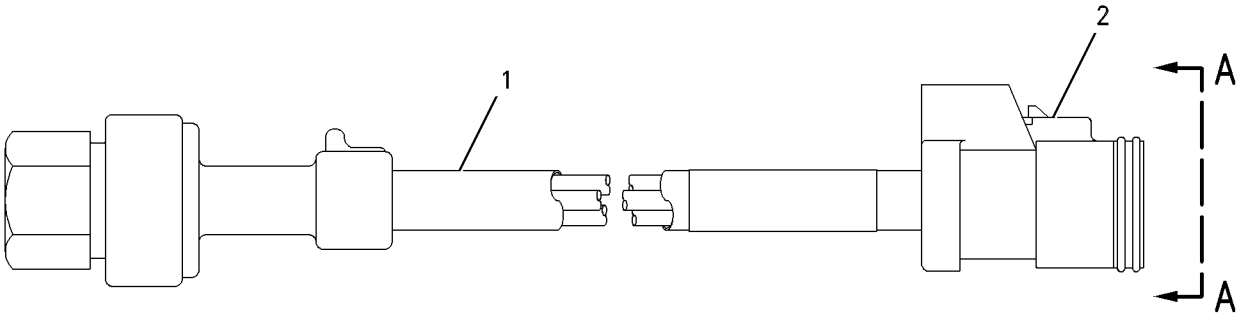

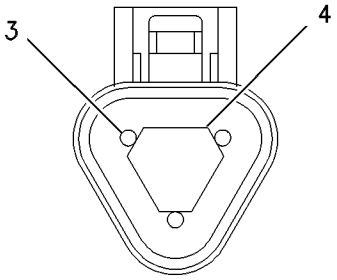

VIEW A-A

GRAPHIC #1 g00625717

103-6093 SENSOR GP-PRESSURE

S/N: 80M1-2705; 3KR1-1313
PART OF 125-3431 DRIVE GP-UNIT INJ HYD PUMP, 130-2596 LINES GP-AIR
FIELD REPLACEMENT ORDER 161-9926—PAGE 457
ALSO AN ATTACHMENT

SMCS-1408 **i01613245**

NOTE	REF NO	GRAPHIC REF	PART NUMBER	QTY	PART NAME 1 2 3 4 5 6 (PRODUCT LEVEL)	SEE PAGE
BE	1	1	**9X-1813**		SLEEVE	
	2	1	**155-2260**	1	KIT-CONNECTING PLUG (3 PIN)	
					(INCLUDES PLUG AS & WEDGE)	
	3	1	**8T-8730**	3	SOCKET-CONNECTOR	
BE	4	1	**150-7989**		TUBE	

B-USE AS REQUIRED
E-ORDER BY THE CENTIMETER

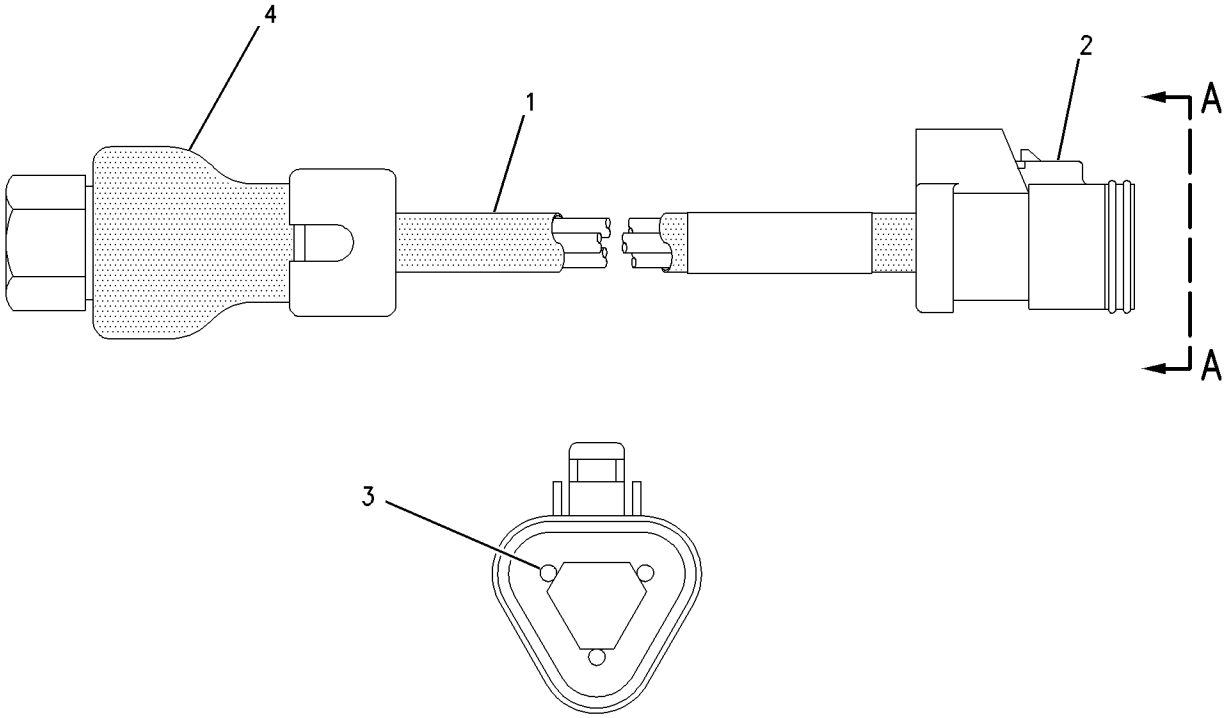

GRAPHIC #1 g00629905

161-9925 SENSOR GP-PRESSURE

S/N: 80M3038-UP
PART OF 125-3431 DRIVE GP-UNIT INJ HYD PUMP
FIELD REPLACEMENT ORDER 194-6722—PAGE 460
ALSO AN ATTACHMENT

SMCS-1408 **i01613251**

NOTE	REF NO	GRAPHIC REF	PART NUMBER	QTY	PART NAME 1 2 3 4 5 6 (PRODUCT LEVEL)	SEE PAGE
BE	1	1	**9X-1813**		SLEEVE	
	2	1	**155-2260**	1	KIT-CONNECTING PLUG (3 PIN)	
					(INCLUDES PLUG AS & WEDGE)	
	3	1	**102-8813**	1	SEAL	
	4	1	**3E-3368**	1	WEDGE-PLUG LOCK	
	5	1	**8T-8730**	3	SOCKET-CONNECTOR	

B-USE AS REQUIRED
E-ORDER BY THE CENTIMETER

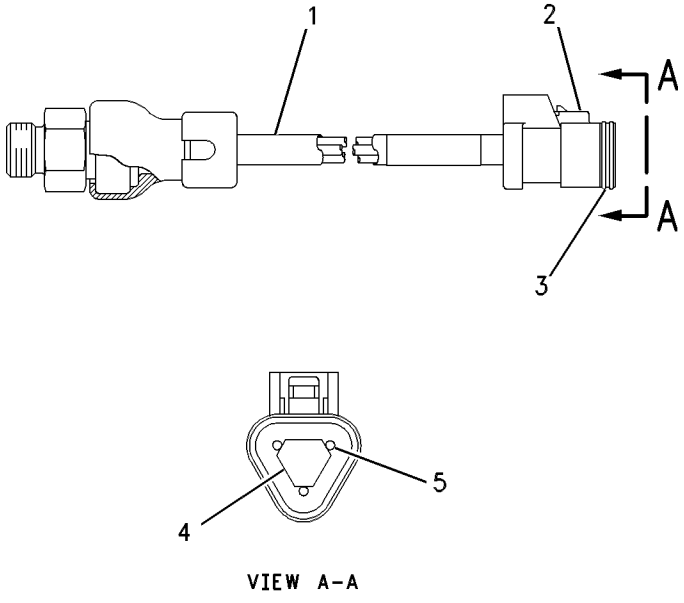

GRAPHIC #1 g00545805

161-9926 SENSOR GP-PRESSURE

S/N: 80M2706-3037; 3KR1314-UP
PART OF 125-3431 DRIVE GP-UNIT INJ HYD PUMP, 130-2596 LINES GP-AIR
FIELD REPLACEMENT FOR 103-6093—PAGE 455
ALSO AN ATTACHMENT

SMCS-1408 **i01689746**

NOTE	REF NO	GRAPHIC REF	PART NUMBER	QTY	PART NAME 1 2 3 4 5 6 (PRODUCT LEVEL)	SEE PAGE
BE	1	1	**9X-1813**		SLEEVE	
	2	1	**155-2260**	1	KIT-CONNECTING PLUG (3 PIN) (PRESSURE SENSOR)	
					(INCLUDES PLUG AS & WEDGE)	
	3	1	**194-5226**	1	HARNESS AS (SOCKET) (PRESSURE SENSOR)	
					(FOR 16-18 GA WIRE)	
					—OR—	
		1	**194-5227**	1	HARNESS AS (PRESSURE SENSOR)	
					(FOR 14 GA WIRE)	
	4	1	**3E-3368**	1	WEDGE-PLUG LOCK	

B-USE AS REQUIRED
E-ORDER BY THE CENTIMETER

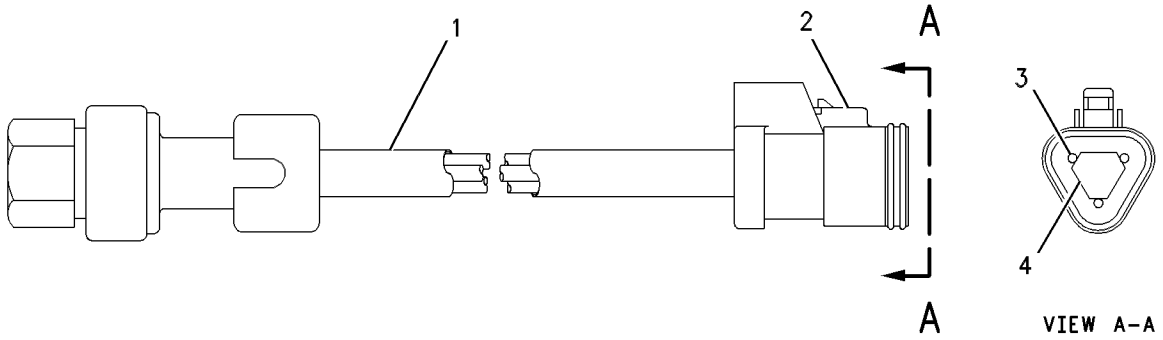

GRAPHIC #1 g00513129

161-9931 SENSOR GP-PRESSURE

S/N: 80M2773-4511
PART OF 126-7292 PUMP & MTG GP-UNIT INJ HYD
FIELD REPLACEMENT ORDER 194-6725—PAGE 462
ALSO AN ATTACHMENT

SMCS-1408 **i01689684**

NOTE	REF NO	GRAPHIC REF	PART NUMBER	QTY	PART NAME 1 2 3 4 5 6 (PRODUCT LEVEL)	SEE PAGE
BE	1	1	**9X-1813**		SLEEVE	
	2	1	**155-2260**	1	KIT-CONNECTING PLUG (3 PIN) (PRESSURE SENSOR)	
					(INCLUDES PLUG AS & WEDGE)	
	4	1	**186-3736**	3	SOCKET-CONNECTOR	
	5	1	**3E-3368**	1	WEDGE-PLUG LOCK	

B-USE AS REQUIRED
E-ORDER BY THE CENTIMETER

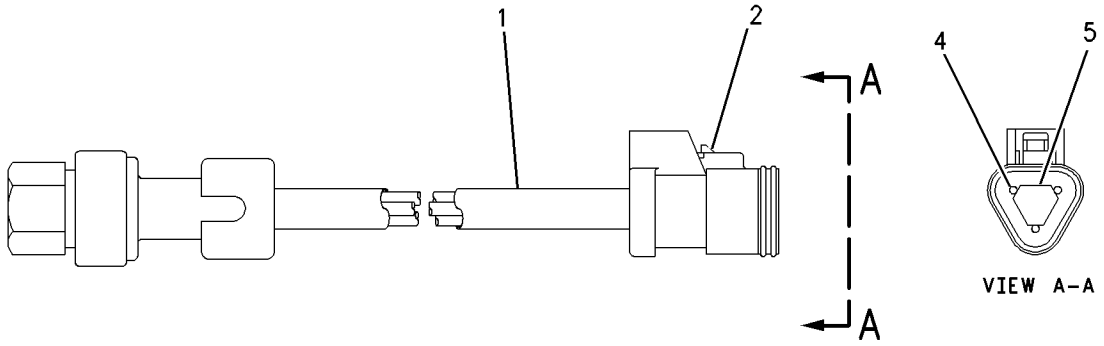

GRAPHIC #1 g00807023

167-1709 SENSOR GP-PRESSURE

S/N: 80M699-UP
PART OF 127-3513 CYLINDER HEAD GP
ALSO AN ATTACHMENT

SMCS-1408 **i01729441**

NOTE	REF NO	GRAPHIC REF	PART NUMBER	QTY	PART NAME 1 2 3 4 5 6 (PRODUCT LEVEL)	SEE PAGE
BE	1	1	**9X-1813**		SLEEVE	
	2	1	**155-2260**	1	KIT-CONNECTING PLUG (3 PIN)	
					(INCLUDES PLUG AS & WEDGE)	
	3	1	**9X-3402**	3	SOCKET-CONNECTOR	
	4	1	**3E-3368**	1	WEDGE-PLUG LOCK (3 PIN)	

B-USE AS REQUIRED
E-ORDER BY THE CENTIMETER

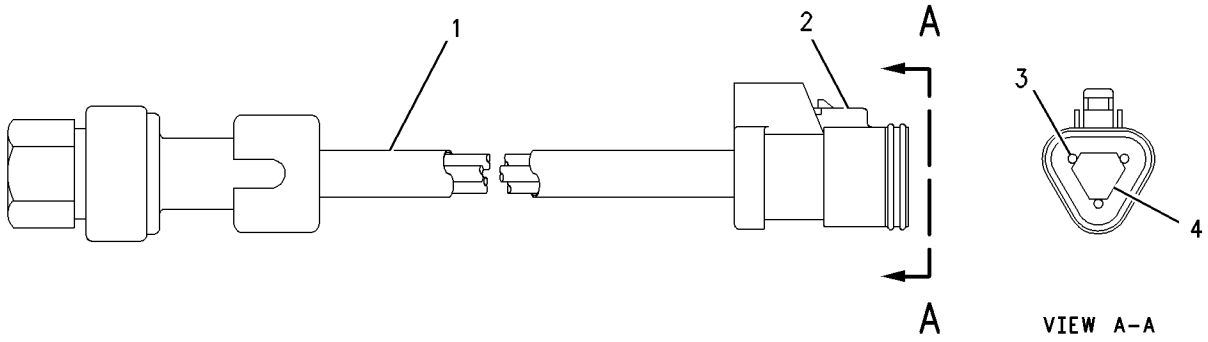

GRAPHIC #1 g00888131

194-6722 SENSOR GP-PRESSURE

S/N: 80M3038-UP
PART OF 125-3431 DRIVE GP-UNIT INJ HYD PUMP
FIELD REPLACEMENT FOR 161-9925—PAGE 456
ALSO AN ATTACHMENT

SMCS-1408 **i01749877**

NOTE	REF NO	GRAPHIC REF	PART NUMBER	QTY	PART NAME 1 2 3 4 5 6 (PRODUCT LEVEL)	SEE PAGE
BE	1	1	**9X-1813**		SLEEVE	
	2	1	**155-2260**	1	KIT-CONNECTING PLUG (3 PIN)	
					(INCLUDES PLUG AS & WEDGE)	
	2A	1	**102-8813**	1	SEAL (INTERFACE)	
	3	1	**180-9340**	3	SOCKET-CONNECTOR	
	4	1	**3E-3368**	1	WEDGE-PLUG LOCK	

B-USE AS REQUIRED
E-ORDER BY THE CENTIMETER

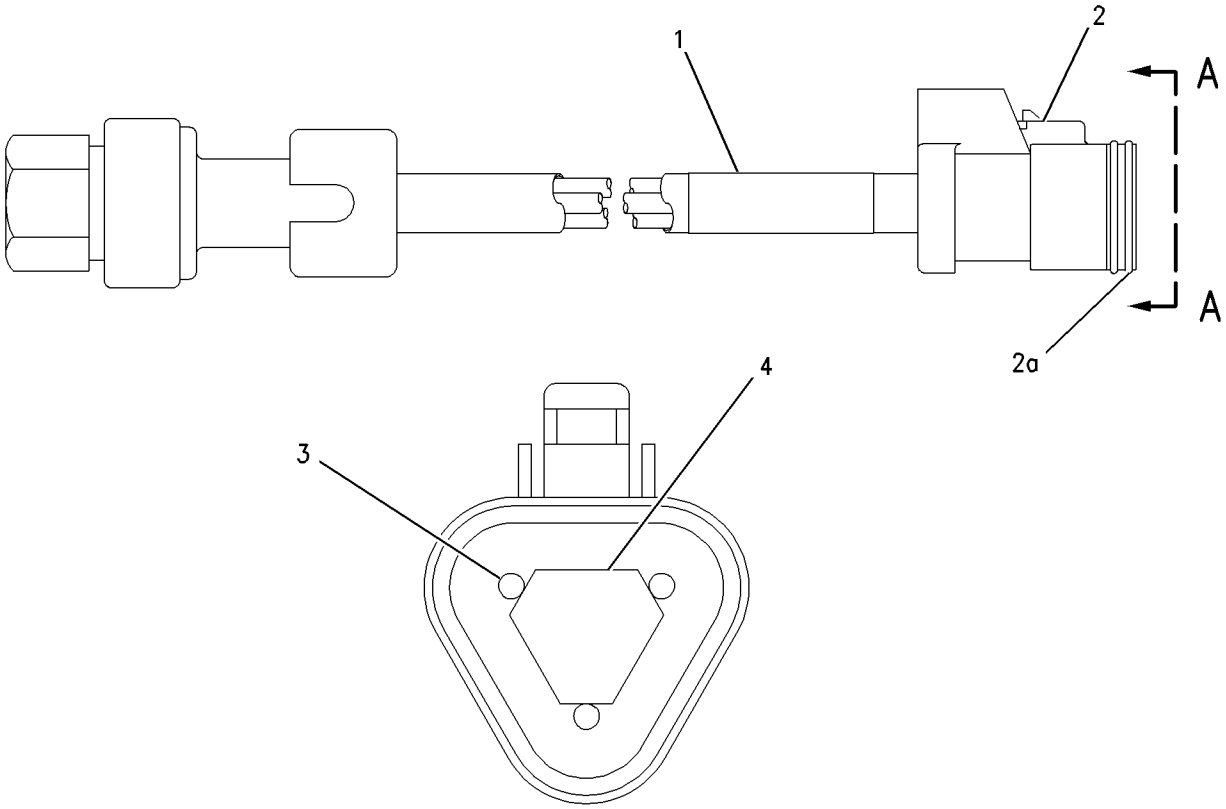

GRAPHIC #1 g00895784

194-6724 SENSOR GP-PRESSURE

S/N: 80M1-UP
PART OF 127-3513 CYLINDER HEAD GP
ALSO AN ATTACHMENT

SMCS-1408 **i01749354**

NOTE	REF NO	GRAPHIC REF	PART NUMBER	QTY	PART NAME 1 2 3 4 5 6 (PRODUCT LEVEL)	SEE PAGE
BE	1	1	**138-3094**		SLEEVE	
	2	1	**155-2260**	1	KIT-CONNECTING PLUG (3 PIN) (PRESSURE SENSOR)	
					(INCLUDES PLUG AS & WEDGE)	
	3	1	**180-9340**	3	SOCKET-CONNECTOR	
	4	1	**3E-3368**	1	WEDGE-PLUG LOCK	

B-USE AS REQUIRED
E-ORDER BY THE CENTIMETER

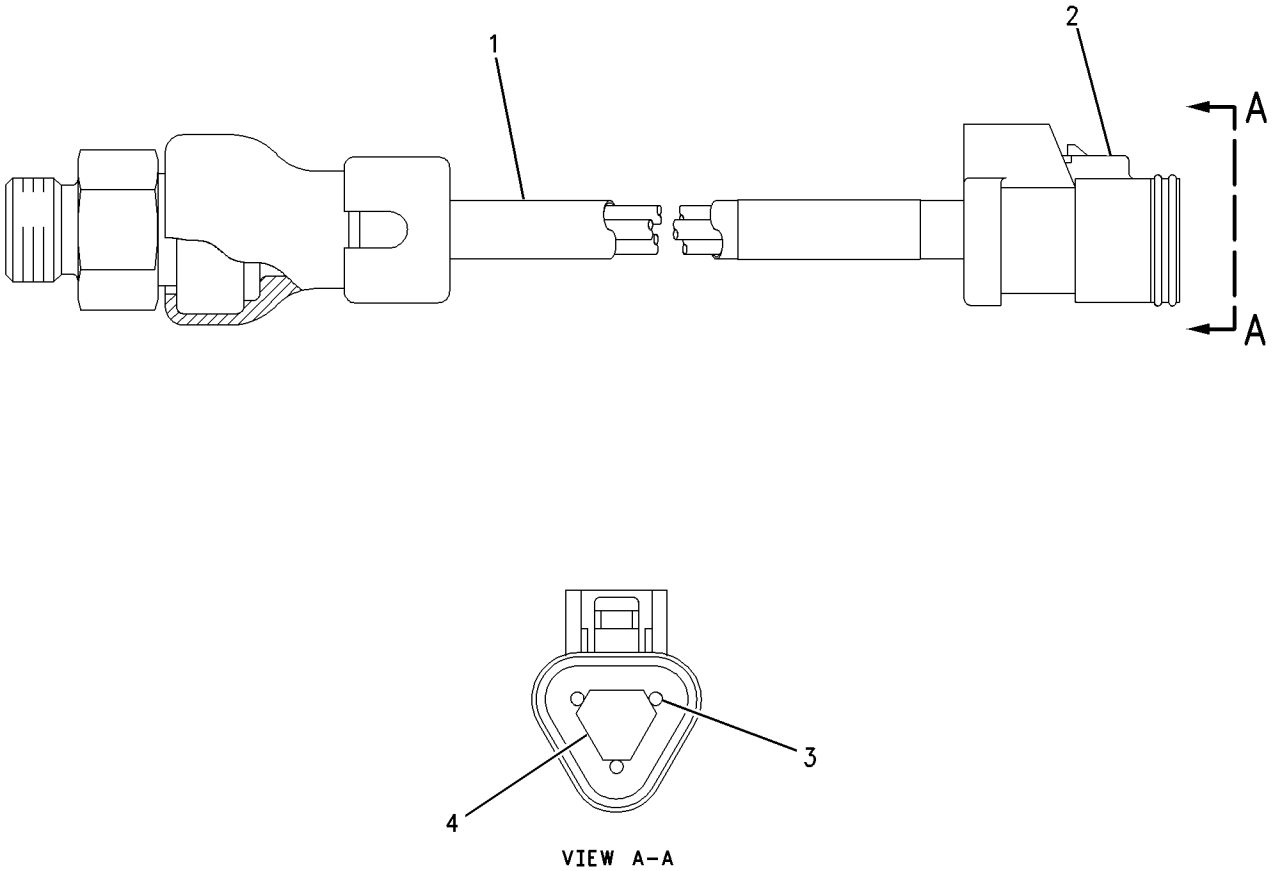

GRAPHIC #1 g00807030

194-6725 SENSOR GP-PRESSURE

S/N: 80M4512-UP
PART OF 126-7292 PUMP & MTG GP-UNIT INJ HYD
FIELD REPLACEMENT FOR 161-9931—PAGE 458
ALSO AN ATTACHMENT

SMCS-1408 **i01749469**

NOTE	REF NO	GRAPHIC REF	PART NUMBER	QTY	PART NAME 1 2 3 4 5 6 (PRODUCT LEVEL)	SEE PAGE
BE	1	1	**9X-1813**		SLEEVE	
	2	1	**155-2260**	1	KIT-CONNECTING PLUG (3 PIN) (PRESSURE SENSOR)	
					(INCLUDES RECEPTACLE AS AND WEDGE)	
	3	1	**180-9340**	3	SOCKET-CONNECTOR	
	4	1	**3E-3368**	1	WEDGE-PLUG LOCK	

B-USE AS REQUIRED
E-ORDER BY THE CENTIMETER

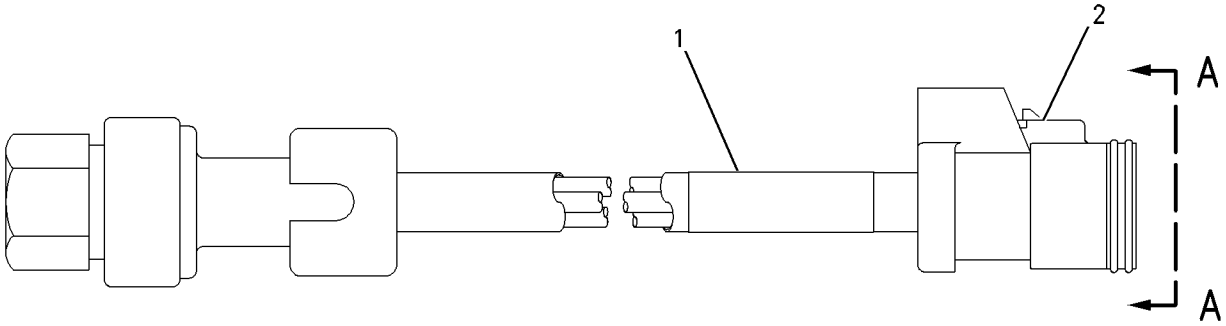

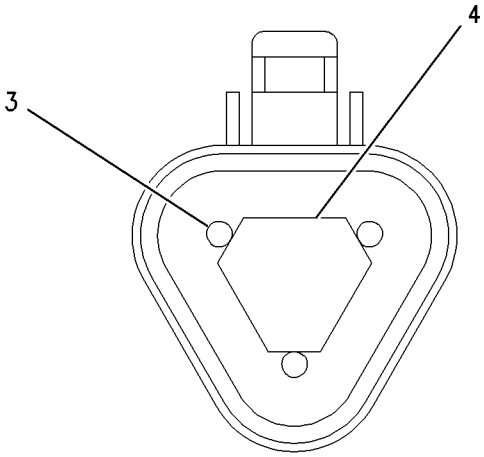

VIEW A-A

GRAPHIC #1 g00851220

119-4166 SENSOR GP-SPEED–FAN

S/N: 3KR1-956, 959-UP
PART OF 123-6968, 136-7609, 161-9862, 178-9300, 183-5116 DRIVE GP-FAN
ALSO AN ATTACHMENT

SMCS-1408 **i01742397**

NOTE	REF NO	GRAPHIC REF	PART NUMBER	QTY	PART NAME 1 2 3 4 5 6 (PRODUCT LEVEL)	SEE PAGE
	1	1	**3E-3371**	1	WEDGE-RECEPTACLE LOCK (3 PIN)	
	2	1	**033-6033**	1	SEAL-O-RING	
	3	1	**8H-3127**	1	BOLT (1/4-20X3/4 IN)	
	4	1	**6N-7523**	1	WASHER (6.48X11.9X1.57MM THK)	
	5	1	**7X-2031**	1	RETAINER	
BE	6	1	**9X-1813**		SLEEVE	
	7	1	**102-8803**	1	KIT-RECEPTACLE (3 PIN)	
					(INCLUDES RECEPTACLE AS & WEDGE)	
	8	1	**8T-8729**	3	PIN-CONNECTOR	

B-USE AS REQUIRED
E-ORDER BY THE CENTIMETER

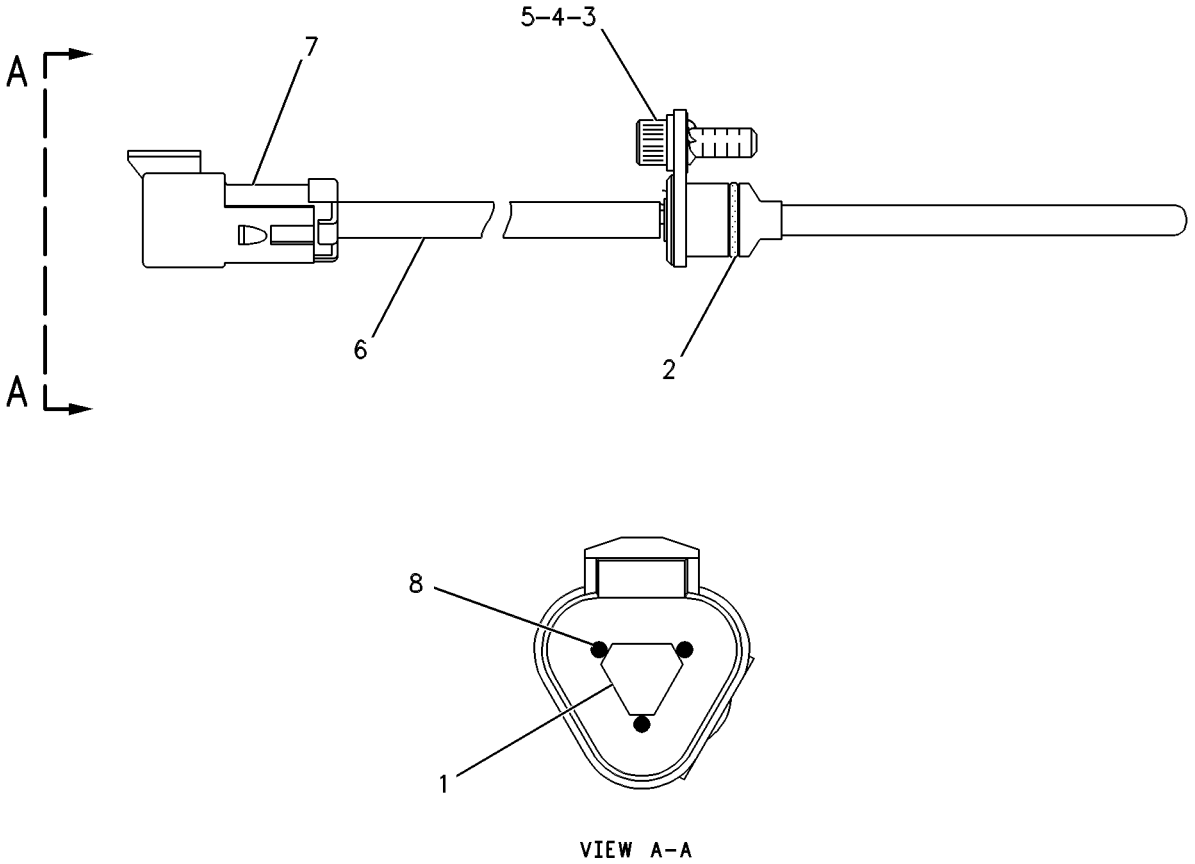

GRAPHIC #1 g00087024

127-1008 SENSOR GP-SPEED—ENGINE SPEED/TIMING

S/N: 80M1-674
PART OF 127-3514 HOUSING GP-FRONT
FIELD REPLACEMENT ORDER 129-6628—PAGE 465
ALSO AN ATTACHMENT

SMCS-1408 **i01562228**

NOTE	REF NO	GRAPHIC REF	PART NUMBER	QTY	PART NAME 1 2 3 4 5 6 (PRODUCT LEVEL)	SEE PAGE
E	1	1	**9X-1813**		SLEEVE (31CM)	
	2	1	**102-8808**	1	KIT-CONNECTING PLUG (3 PIN)	
					(INCLUDES PLUG AS & WEDGE)	
	3	1	**3E-3368**	1	WEDGE-PLUG LOCK	
	4	1	**8T-8730**	3	SOCKET-CONNECTOR	
	5	1	**8L-2786**	1	SEAL-O-RING	
	6	1	**102-8813**	1	SEAL	

E-ORDER BY THE CENTIMETER

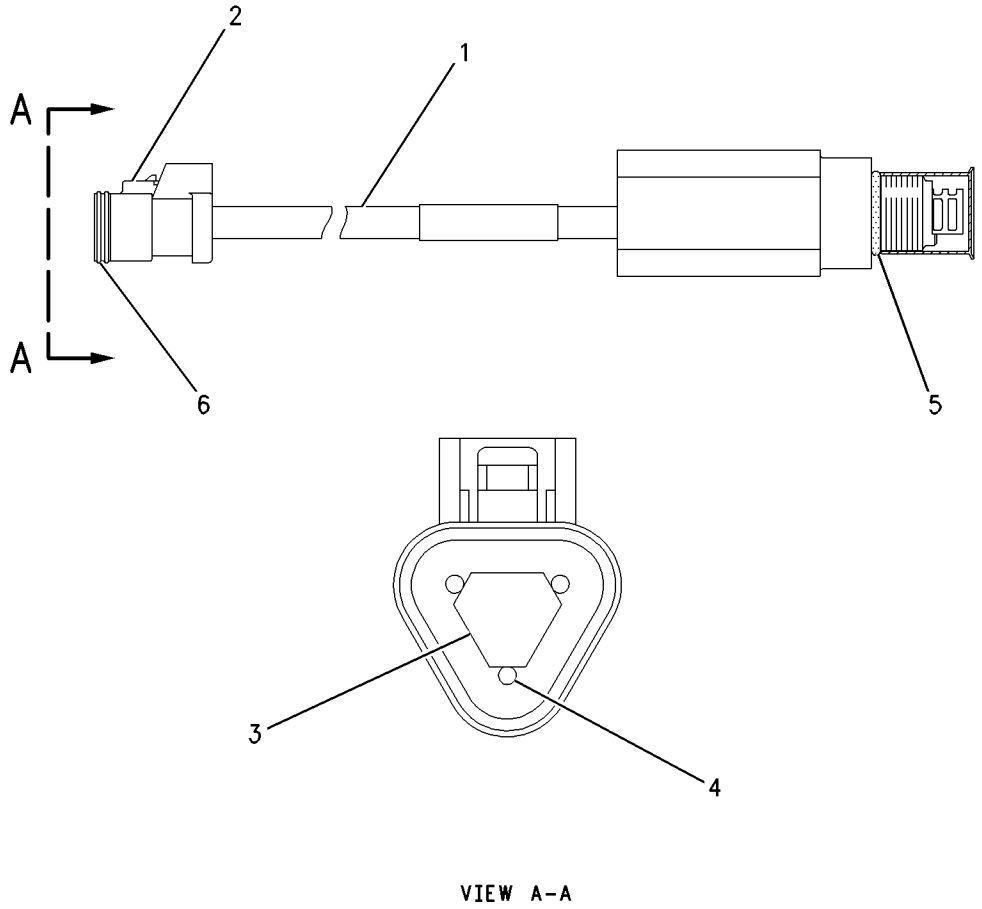

GRAPHIC #1 g00644813

129-6628 SENSOR GP-SPEED—ENGINE SPEED/TIMING

S/N: 80M675-UP
PART OF 127-3514 HOUSING GP-FRONT
FIELD REPLACEMENT FOR 127-1008—PAGE 464
ALSO AN ATTACHMENT

SMCS-1408 **i01613291**

NOTE	REF NO	GRAPHIC REF	PART NUMBER	QTY	PART NAME 1 2 3 4 5 6 (PRODUCT LEVEL)	SEE PAGE
BE	1	1	**9X-1813**		SLEEVE	
	2	1	**155-2260**	1	KIT-CONNECTING PLUG (3 PIN) (ENGINE SPEED TIMING SENSOR)	
					(INCLUDES PLUG AS & WEDGE)	
	3	1	**102-8813**	1	SEAL	
	4	1	**3E-3368**	1	WEDGE-PLUG LOCK	
	5	1	**8T-8730**	3	SOCKET-CONNECTOR	
	6	1	**8L-2786**	1	SEAL-O-RING	

B-USE AS REQUIRED
E-ORDER BY THE CENTIMETER

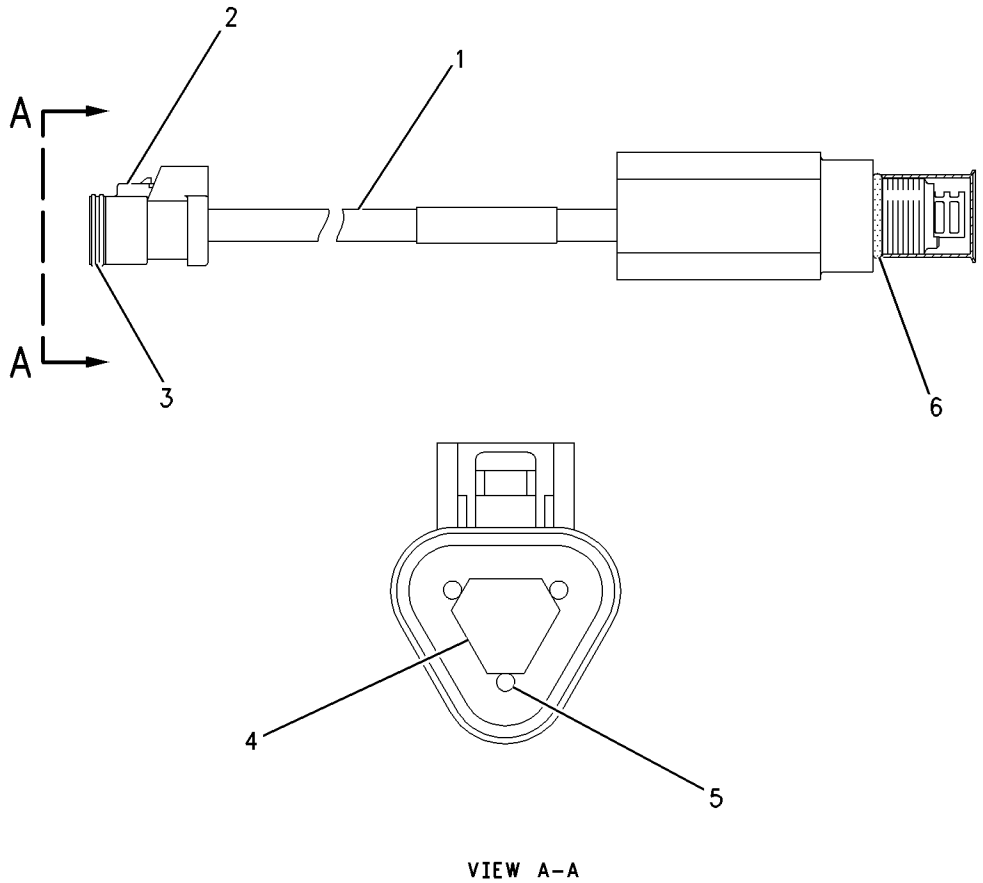

GRAPHIC #1 g00714038

183-5011 SENSOR GP-SPEED

S/N: 3KR1454-1494
MAGNETIC-HIGH OUTPUT
PART OF 109-5749 BATTERY & WIRING GP

SMCS-1408 **i01696092**

NOTE	REF NO	GRAPHIC REF	PART NUMBER	QTY	PART NAME 1 2 3 4 5 6 (PRODUCT LEVEL)	SEE PAGE
	1	1	**171-5349**	1	STRAP-MARKER	
	2	1	**102-8802**	1	KIT-RECEPTACLE (2 PIN)	
					(INCLUDES RECEPTACLE AS & WEDGE)	
	3	1	**8T-8729**	2	PIN-CONNECTOR	
	4	1	**3E-3365**	1	WEDGE-RECEPTACLE LOCK (2 PIN)	
E	5	1	**9X-1813**		SLEEVE	

E-ORDER BY THE CENTIMETER

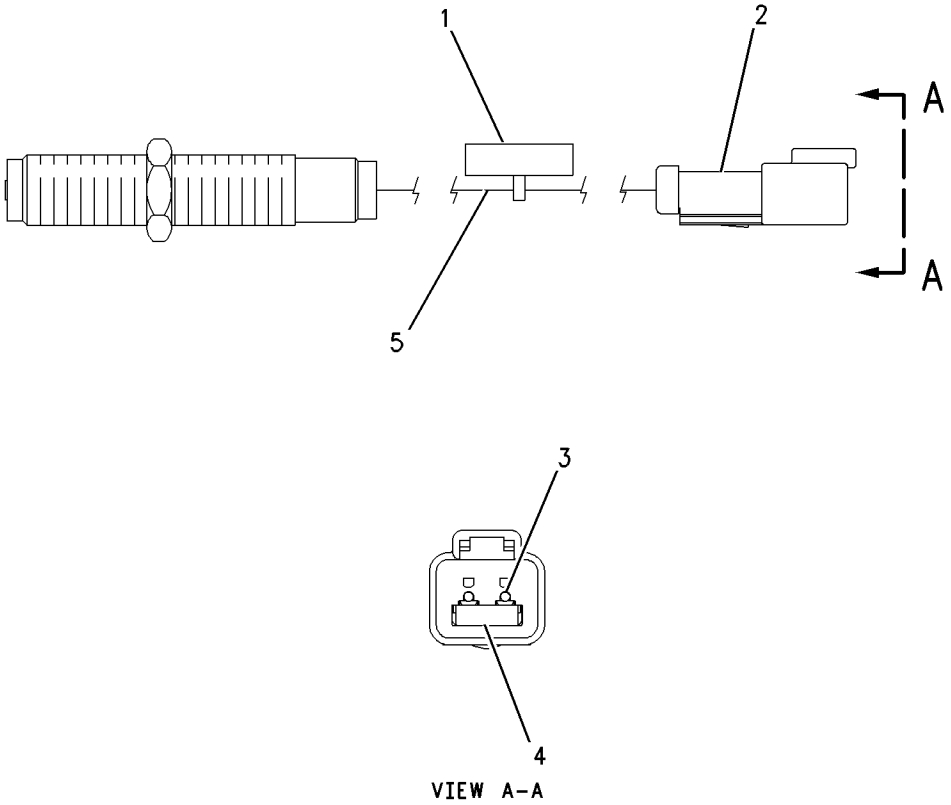

GRAPHIC #1 g00690327

193-2550 SENSOR GP-SPEED

S/N: 3KR1495-UP

PART OF 109-5749 BATTERY & WIRING GP

SMCS-1408 **i01742398**

NOTE	REF NO	GRAPHIC REF	PART NUMBER	QTY	PART NAME 1 2 3 4 5 6 (PRODUCT LEVEL)	SEE PAGE
	1	1	**171-5349**	1	STRAP-MARKER	
	2	1	**102-8802**	1	KIT-RECEPTACLE (2 PIN)	
					(INCLUDES RECEPTACLE AS & WEDGE)	
	3	1	**8T-8729**	2	PIN-CONNECTOR	
	4	1	**3E-3365**	1	WEDGE-RECEPTACLE LOCK (2 PIN)	
BE	5	1	**9X-1813**		SLEEVE	

B-USE AS REQUIRED
E-ORDER BY THE CENTIMETER

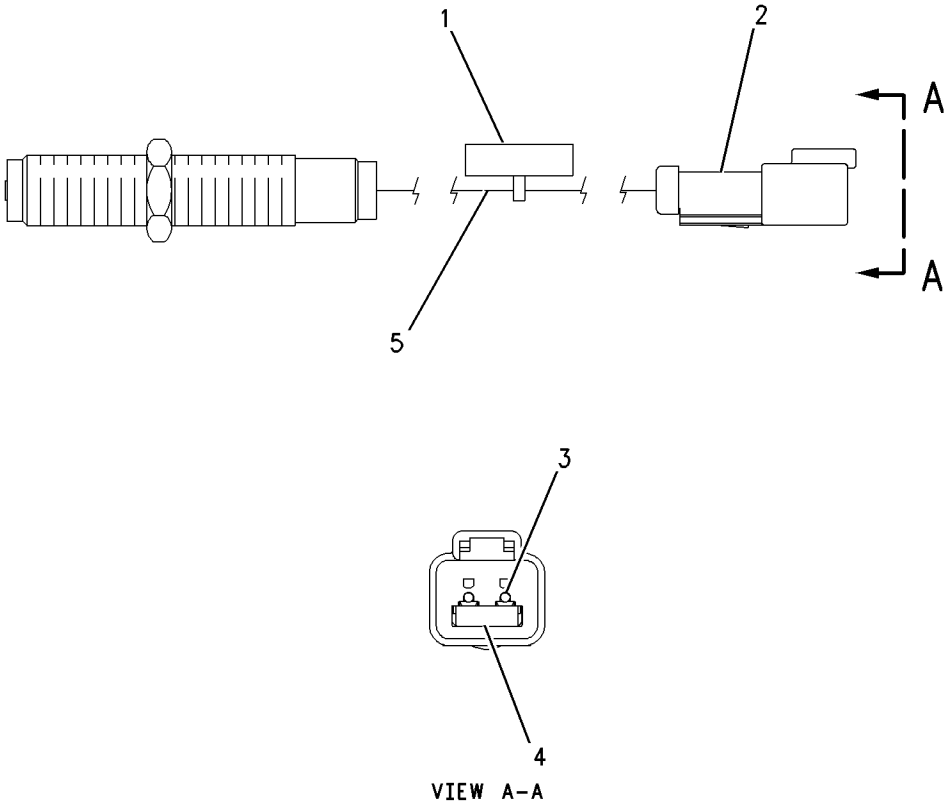

GRAPHIC #1 g00690327

106-0735 SENSOR GP-TEMPERATURE—ENGINE OIL

S/N: 80M1-UP
PART OF 126-7292 PUMP & MTG GP-UNIT INJ HYD
ALSO AN ATTACHMENT

SMCS-1408, 1906, 1921, 1922, 7400 **i01730917**

NOTE	REF NO	GRAPHIC REF	PART NUMBER	QTY	PART NAME 1 2 3 4 5 6 (PRODUCT LEVEL)	SEE PAGE
BE	1	1	**9X-1813**		SLEEVE	
	2	1	**102-8803**	1	KIT-RECEPTACLE (3 PIN)	
					(INCLUDES RECEPTACLE AS & WEDGE)	
	3	1	**186-3735**	3	PIN-CONNECTOR	
	4	1	**3E-3371**	1	WEDGE-RECEPTACLE LOCK (3 PIN)	

B-USE AS REQUIRED
E-ORDER BY THE CENTIMETER

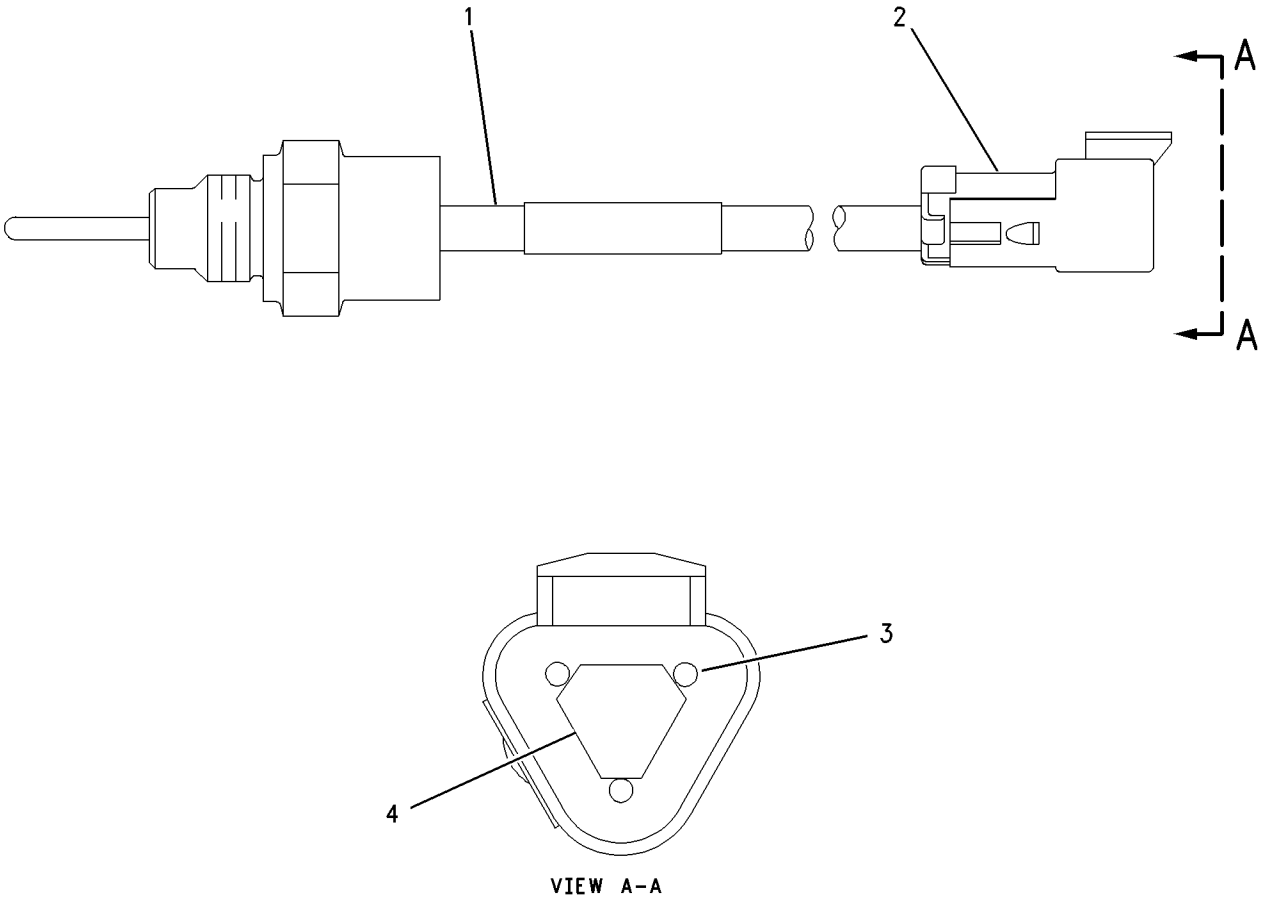

GRAPHIC #1 g00888144

ELECTRICAL AND STARTING SYSTEM

118-7226 SENSOR GP-TEMPERATURE

S/N: 3KR1-UP
8 VOLT. PULSE WIDTH MODULATION
PART OF 106-8484, 109-5749 BATTERY & WIRING GP

SMCS-1408, 1906, 1921, 1922, 7400 **i01668866**

NOTE	REF NO	GRAPHIC REF	PART NUMBER	QTY	PART NAME 1 2 3 4 5 6 (PRODUCT LEVEL)	SEE PAGE
BE	1	1	**9X-1813**		SLEEVE	
	2	1	**102-8803**	1	KIT-RECEPTACLE (3 PIN)	
					(INCLUDES RECEPTACLE AS & WEDGE)	
	3	1	**8T-8729**	3	PIN-CONNECTOR	
	4	1	**3E-3371**	1	WEDGE-RECEPTACLE LOCK (3 PIN)	

B-USE AS REQUIRED
E-ORDER BY THE CENTIMETER

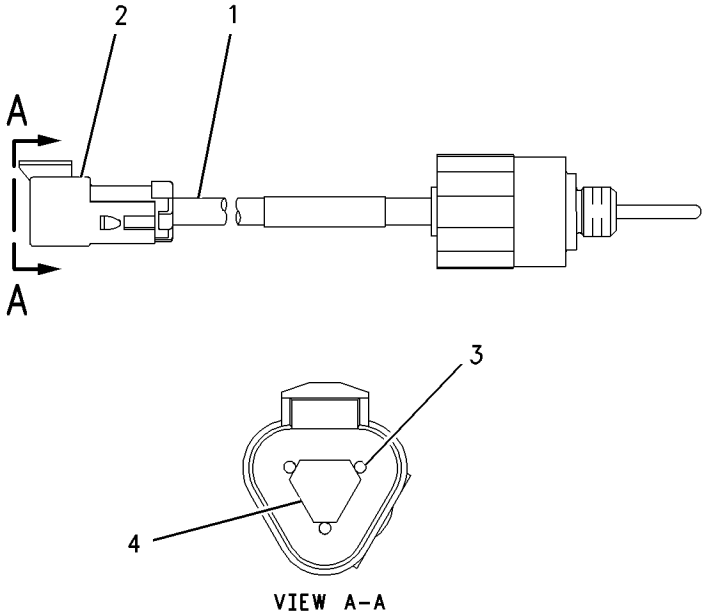

GRAPHIC #1 g00830476

ELECTRICAL AND STARTING SYSTEM

134-2252 SENSOR GP-TEMPERATURE

S/N: 3KR885-UP
8 VOLT. PULSE WIDTH MODULATION
PART OF 106-8484, 109-5749 BATTERY & WIRING GP

SMCS-1408, 1906, 1921, 1922, 7400 **i01233990**

NOTE	REF NO	GRAPHIC REF	PART NUMBER	QTY	PART NAME 1 2 3 4 5 6 (PRODUCT LEVEL)	SEE PAGE
	1	1	**3E-3371**	1	WEDGE-RECEPTACLE LOCK	
BE	2	1	**9X-1386**		SLEEVE	
	3	1	**102-8803**	1	KIT-RECEPTACLE (3 PIN)	
					(INCLUDES RECEPTACLE AS & WEDGE)	
	4	1	**8T-8729**	3	PIN-CONNECTOR	

B-USE AS REQUIRED
E-ORDER BY THE CENTIMETER

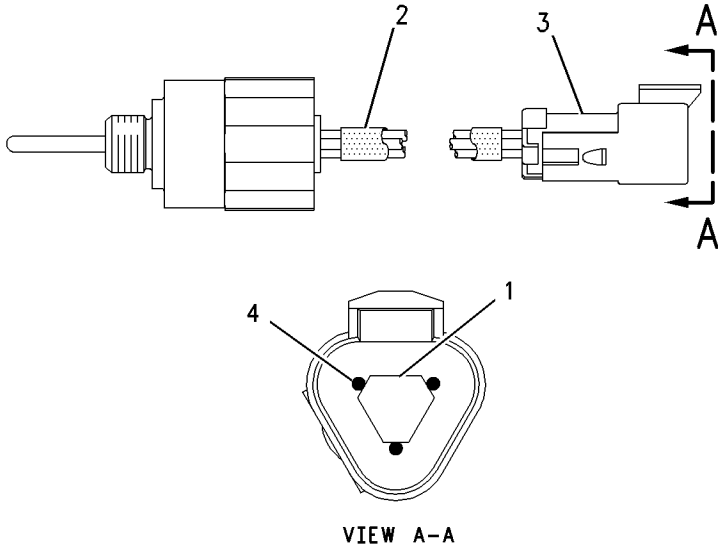

GRAPHIC #1 g00658816

ELECTRICAL AND STARTING SYSTEM

194-1586 SERVICE GP-POWER TRAIN

S/N: 3KR1-UP

PART OF 145-8934 ELECTRONICS GP-POWER TRAIN

SMCS-7610 **i01443013**

NOTE	REF NO	GRAPHIC REF	PART NUMBER	QTY	PART NAME 1 2 3 4 5 6 (PRODUCT LEVEL)	SEE PAGE
Y	1	1	**172-9389**	1	CONTROL GP-UNPROGRAMMED	394
F		1	**183-7424**	1	SOFTWARE GP-POWER TRAIN	

F-NOT SHOWN
Y-SEPARATE ILLUSTRATION

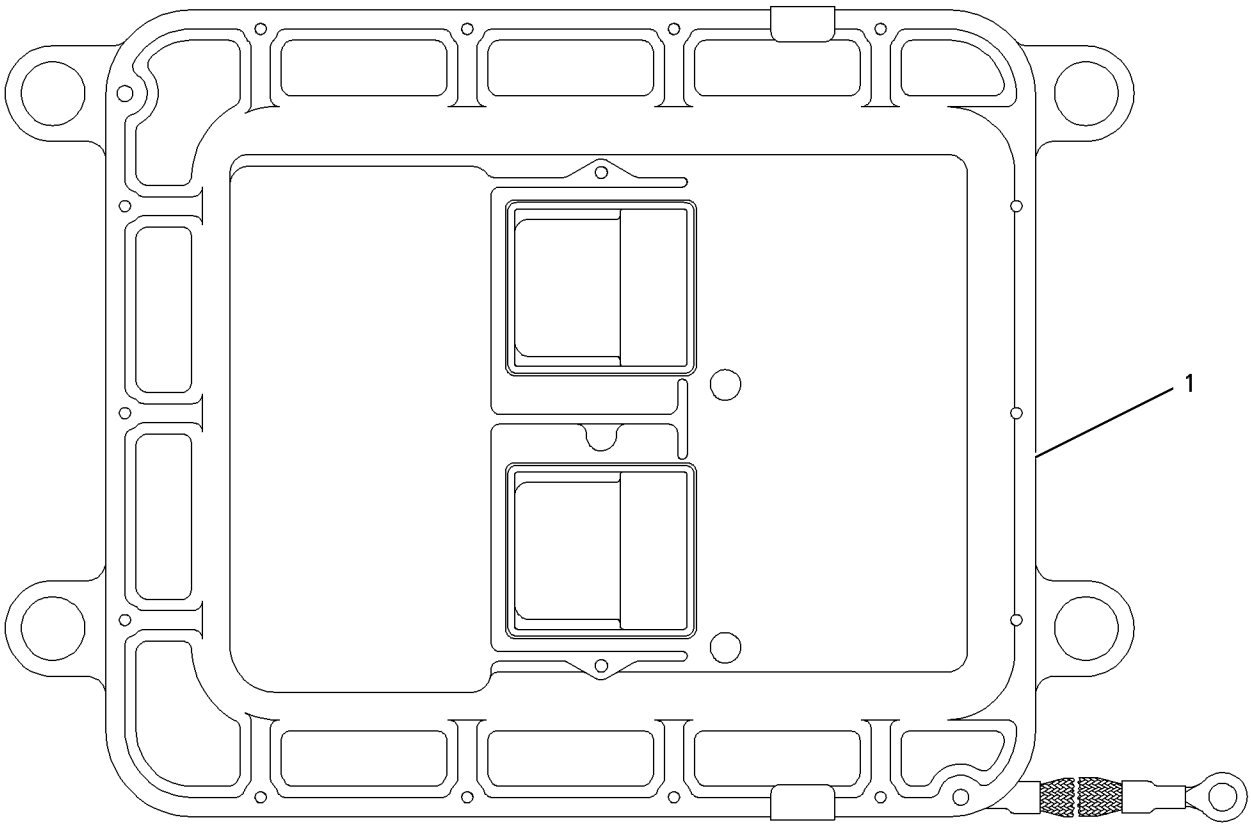

GRAPHIC #1 g00753501

ELECTRICAL AND STARTING SYSTEM

3T-4704 SOLENOID AS-STARTING MOTOR

S/N: 3KR1-UP
24 VOLT
PART OF 6V-0928 STARTING MOTOR GP-ELECTRIC
AN ATTACHMENT

SMCS-1467 **i01446638**

NOTE	REF NO	GRAPHIC REF	PART NUMBER	QTY	PART NAME 1 2 3 4 5 6 (PRODUCT LEVEL)	SEE PAGE
	1	1	**9G-6770**	1	CONTACT AS	
	2	1	**4M-1815**	1	SPRING-CONTACT	
	3	1	**6V-8373**	3	SCREW-MACHINE (6-32X0.187 IN)	
	4	1	**7T-9123**	1	GASKET-PLATE	
	5	1	**045-4065**	4	SCREW-MACHINE (10-32X0.75 IN)	
		1	**4B-4274**	8	WASHER (5.5X13X1.2MM THK)	
		1	**4B-2049**	4	NUT (10-32 THD)	
	6	1	**6T-1120**	1	BUSHING-TERMINAL	
	7	1	**6T-1119**	1	TERMINAL AS	
	8	1	**8T-0328**	3	WASHER-HARD (5.5X10X1MM THK)	
		1	**8F-1434**	2	LOCKWASHER	
		1	**6V-8188**	3	NUT (1/2-13 THD)	
	9	1	**4B-2049**	3	NUT (10-32 THD)	
		1	**7X-0562**	3	WASHER-HARD (13.5X19X0.8MM THK)	
	10	1	**6T-0362**	1	INSULATOR	

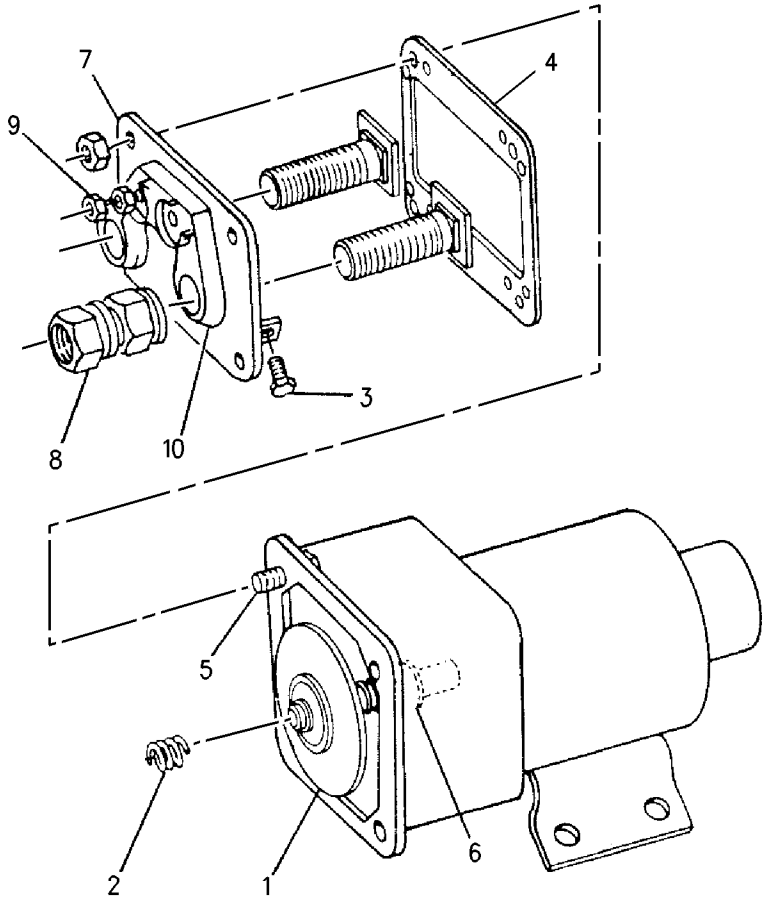

GRAPHIC #1 g00744087

MEMORANDA

ELECTRICAL AND STARTING SYSTEM

114-8998 STARTING AID GP-ETHER

S/N: 3KR1-UP

SMCS-1456 **i01401045**

NOTE	REF NO	GRAPHIC REF	PART NUMBER	QTY	PART NAME 1 2 3 4 5 6 (PRODUCT LEVEL)	SEE PAGE
	1	1	**5P-4116**	2	WASHER-HARD (8.8X20.5X2MM THK)	
	2	1	**7N-2059**	1	CLAMP AS-CYLINDER	
	3	1	**4D-8948**	1	CLIP	
	4	1	**6N-7672**	1	ATOMIZER AS	
	5	1	**8E-7118**	1	TUBE	
	6	1	**5K-0906**	3	BOLT (5/16-18X0.63 IN)	
	7	1	**8T-4224**	4	WASHER-HARD (8.8X16X2MM THK)	
	8	1	**5P-6313**	1	NUT-FLARELESS (5/16-24 THD)	
	9	1	**5P-6314**	1	SLEEVE-FLARELESS	
	10	1	**6V-2686**	1	CLIP (SLOT)	
	11	1	**5P-7907**	1	CONNECTOR	
	12	1	**1W-3077**	1	BRACKET	
	13	1	**4M-6425**	2	BOLT (5/16-18X1 IN)	
	14	1	**6V-8189**	1	NUT (5/16-18 THD)	
	15	1	**3E-6333**	1	VALVE AS (ETHER START)(24 VOLT)	
	16	1	**7N-9801**	1	GASKET	
	17	1	**102-8802**	1	KIT-RECEPTACLE (2 PIN)	
					(INCLUDES RECEPTACLE AS & WEDGE)	
	18	1	**8T-8729**	2	PIN-CONNECTOR (4 PIN)	
	19	1	**3E-3365**	1	WEDGE-RECEPTACLE LOCK (2 PIN)	
AF		1	**7N-0296**		CYLINDER AS (ETHER)	

A-NOT PART OF THIS GROUP
F-NOT SHOWN

114-8998 **STARTING AID GP-ETHER** *(contd.)* **i01401045**

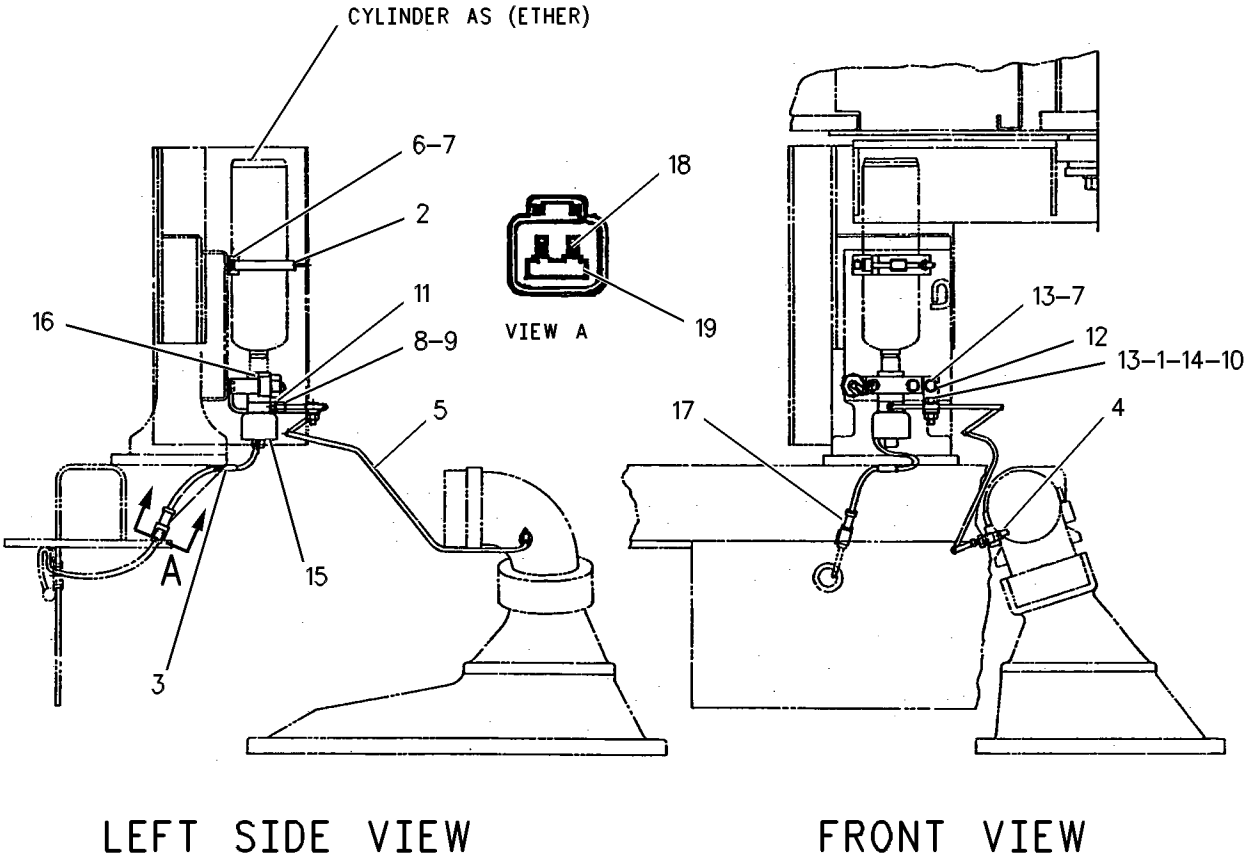

GRAPHIC #1 g00377589

ELECTRICAL AND STARTING SYSTEM

116-5829 STARTING AR-COLD WEATHER

S/N: 3KR1-UP
LOW TEMPERATURE
AN ATTACHMENT

SMCS-1450 **i01749546**

NOTE	REF NO	GRAPHIC REF	PART NUMBER	QTY	PART NAME 1 2 3 4 5 6 (PRODUCT LEVEL)	SEE PAGE
	1	1	**9X-9730**	2	BATTERY (12 VOLT)	
					(EACH INCLUDES)	
		1	**7N-0060**	6	VENT AS	
	2	1	**8V-0622**	1	CABLE AS	
		1	**8C-5917**	1	TERMINAL AS-BATTERY (POSITIVE)	
		1	**1M-6119**	2	BOLT-BATTERY TERMINAL (5/16-18X1.375 IN)	
		1	**1M-6120**	2	NUT-BATTERY TERMINAL (5/16-18 THD)	
BE		1	**5P-0761**		CABLE (00GA)(RED) (14CM)	
		1	**8T-9757**	1	TERMINAL AS-BATTERY (NEGATIVE)	
		1	**9G-0003**	1	COVER-TERMINAL (BLACK)	
		1	**9G-0004**	1	COVER-TERMINAL (RED)	
	3	1	**8E-4260**	1	HOLD-DOWN AS	
B	4	1	**9X-6772**	12	STRAP-CABLE	
Y	5	1	*8N-8753*	1	STARTING MOTOR GP-ELECTRIC	492
	6	1	**061-7278**	1	CABLE AS	
BE		1	**5P-0747**		CABLE (00GA)(BLACK) (53CM)	
		1	**1S-7251**	2	TERMINAL-RING (FOR 1/2 IN BOLT)	
	7	1	**133-3801**	1	CABLE AS	
		1	**1S-4915**	2	LINER-CONDUIT	
		1	**1S-7251**	2	TERMINAL-RING (FOR 1/2 IN BOLT)	
E		1	**5P-0695**		CONDUIT (201CM)	
E		1	**5P-0761**		CABLE (00GA)(RED) (225CM)	
		1	**8N-0869**	2	COVER-TERMINAL (RED)	
E		1	**8T-2225**		TUBE-HEAT SHRINK (16CM)	
	8	1	**138-1103**	1	CABLE AS	
		1	**1S-7252**	1	TERMINAL-RING (FOR 3/8 IN BOLT)	
E		1	**5P-0747**		CABLE (00GA)(BLACK) (225CM)	
		1	**7N-5274**	1	COVER-TERMINAL (BLACK)	
E		1	**8T-2225**		TUBE-HEAT SHRINK (15CM)	
		1	**3S-6050**	1	TERMINAL AS-BATTERY (NEGATIVE)	
		1	**1M-6119**	1	BOLT-BATTERY TERMINAL (5/16-18X1.375 IN)	
		1	**1M-6120**	1	NUT-BATTERY TERMINAL (5/16-18 THD)	
		1	**1S-4915**	2	LINER-CONDUIT	
		1	**3S-2093**	1	STRAP-CABLE	
E		1	**5P-0695**		CONDUIT (217CM)	
	9	1	**7T-9982**	1	CABLE AS	
		1	**3S-2093**	1	STRAP-CABLE	
E		1	**5P-0761**		CABLE (00GA)(RED) (160CM)	
E		1	**5P-0695**		CONDUIT (142CM)	
		1	**8N-1725**	1	COVER-TERMINAL (RED)	
		1	**3S-6049**	1	TERMINAL AS-BATTERY (POSITIVE)	
		1	**1M-6119**	1	BOLT-BATTERY TERMINAL (5/16-18X1.375 IN)	
		1	**1M-6120**	1	NUT-BATTERY TERMINAL (5/16-18 THD)	
		1	**1S-4915**	2	LINER-CONDUIT	
E		1	**8T-2225**		TUBE-HEAT SHRINK (23CM)	
		1	**8N-0869**	1	COVER-TERMINAL (RED) (RING)	
		1	**1S-7251**	1	TERMINAL-RING (FOR 1/2 IN BOLT)	
Y	10	1	*9W-0742*	1	JUNCTION BLOCK GP	413
	11	1	**9W-2938**	1	COVER AS	
		1	**4D-6716**	3	RIVET-POP	
	12	1	**5C-6565**	2	BOLT (1/2-13X1.125 IN)	
	13	1	**8T-4223**	2	WASHER-HARD (13.5X25.5X3MM THK)	
	14	1	**4P-7581**	4	CLIP	
	15	1	**5S-7379**	1	BOLT (3/8-16X0.875 IN)	
B	16	1	**7K-1181**	12	STRAP-CABLE	

116-5829 STARTING AR-COLD WEATHER *(contd.)*

i01749546

NOTE	REF NO	GRAPHIC REF	PART NUMBER	QTY	PART NAME 1 2 3 4 5 6 (PRODUCT LEVEL)	SEE PAGE
	17	1	**3D-6209**	1	GROMMET	
	18	1	**128-8405**	1	STRAP	
	19	1	**6V-8188**	1	NUT (1/2-13 THD)	
	20	1	**119-6931**	1	HARNESS AS	
	21	1	**4P-7428**	1	CLIP	
	22	1	**3K-6060**	2	LOCKNUT (3/8-16 THD)	
	23	1	**125-1302**	1	SWITCH GP-MAGNETIC	
	24	1	**5P-1075**	2	WASHER-HARD (10.2X22.5X3MM THK)	
	25	1	**3E-9865**	2	LOCKNUT (1/4-20 THD)	
	26	1	**8T-4205**	2	WASHER-HARD (7.2X14.5X2MM THK)	
	27	1	**7T-7777**	1	CABLE AS	
E		1	**5P-0761**		CABLE (00GA)(RED) (109CM)	
E		1	**5P-0695**		CONDUIT (86CM)	
		1	**8N-0869**	2	COVER-TERMINAL (RED)	
		1	**1S-7251**	2	TERMINAL-RING (FOR 1/2 IN BOLT)	
		1	**1S-4915**	2	LINER-CONDUIT	
E		1	**8T-2225**		TUBE-HEAT SHRINK (16CM)	
	28	1	**6V-4611**	1	FILM-WARNING (JUMPER CABLE)	
	29	1	**5P-8502**	1	PADLOCK GP	
		1	**5P-8500**	1	KEY	
		1	**8Y-6364**	1	SLEEVE	

B-USE AS REQUIRED
E-ORDER BY THE CENTIMETER
Y-SEPARATE ILLUSTRATION

116-5829 **STARTING AR-COLD WEATHER** *(contd.)* **i01749546**

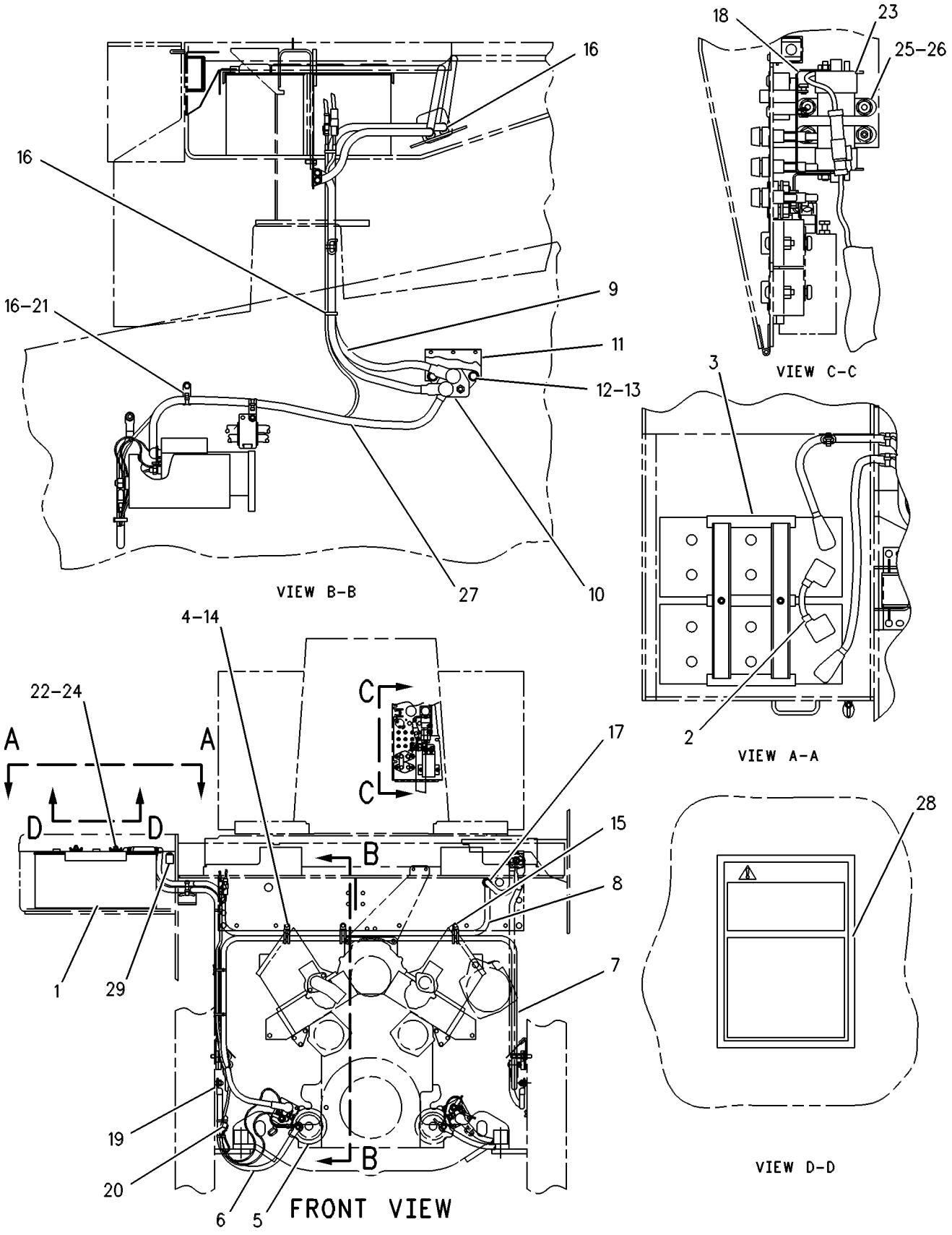

GRAPHIC #1 g00281404

MEMORANDA

ELECTRICAL AND STARTING SYSTEM

149-7027 STARTING AR-COLD WEATHER

S/N: 3KR1-UP
LOW TEMPERATURE
AN ATTACHMENT

SMCS-1450 **i01742400**

NOTE	REF NO	GRAPHIC REF	PART NUMBER	QTY	PART NAME 1 2 3 4 5 6 (PRODUCT LEVEL)	SEE PAGE
	1	1	**9X-9730**	2	BATTERY (12 VOLT)	
					(EACH INCLUDES)	
		1	**7N-0060**	6	VENT AS	
	2	1	**8V-0622**	1	CABLE AS	
		1	**8C-5917**	1	TERMINAL AS-BATTERY (POSITIVE)	
		1	**1M-6119**	2	BOLT-BATTERY TERMINAL (5/16-18X1.375 IN)	
		1	**1M-6120**	2	NUT-BATTERY TERMINAL (5/16-18 THD)	
E		1	**5P-0761**		CABLE (00GA)(RED) (14CM)	
		1	**8T-9757**	1	TERMINAL AS-BATTERY (NEGATIVE)	
		1	**9G-0003**	1	COVER-TERMINAL (BLACK)	
		1	**8L-8413**	1	STRAP-CABLE	
		1	**9G-0004**	1	COVER-TERMINAL (RED)	
		1	**8L-8413**	1	STRAP-CABLE	
	3	1	**153-6281**	1	HOLD DOWN AS	
	4	1	**133-3801**	1	CABLE AS	
		1	**1S-4915**	2	LINER-CONDUIT	
		1	**1S-7251**	2	TERMINAL-RING (FOR 1/2 IN BOLT)	
E		1	**5P-0695**		CONDUIT (276CM)	
E		1	**5P-0761**		CABLE (00GA)(RED) (300CM)	
		1	**8N-0869**	2	COVER-TERMINAL (RED)	
BE		1	**8T-2225**		TUBE-HEAT SHRINK	
Y	5	1	*8N-8753*	1	STARTING MOTOR GP-ELECTRIC	492
	6	1	**061-7278**	1	CABLE AS	
E		1	**5P-0747**		CABLE (00GA)(BLACK) (53CM)	
		1	**1S-7251**	1	TERMINAL-RING (FOR 1/2 IN BOLT)	
	7	1	**138-1103**	1	CABLE AS	
		1	**1S-4915**	2	LINER-CONDUIT	
		1	**1S-7252**	1	TERMINAL-RING (FOR 3/8 IN BOLT)	
		1	**3S-2093**	1	STRAP-CABLE	
E		1	**5P-0695**		CONDUIT (217CM)	
E		1	**5P-0747**		CABLE (00GA)(BLACK) (264CM)	
		1	**7N-5274**	1	COVER-TERMINAL (BLACK)	
		1	**8L-8413**	1	STRAP-CABLE	
BE		1	**8T-2225**		TUBE-HEAT SHRINK	
		1	**3S-6050**	1	TERMINAL AS-BATTERY (NEGATIVE)	
		1	**1M-6119**	1	BOLT-BATTERY TERMINAL (5/16-18X1.375 IN)	
		1	**1M-6120**	1	NUT-BATTERY TERMINAL (5/16-18 THD)	
	8	2	**125-1302**	1	SWITCH GP-MAGNETIC (DISCONNECT SWITCH)	
		2	**102-8802**	1	KIT-RECEPTACLE (2 PIN)	
					(INCLUDES RECEPTACLE AS & WEDGE)	
		2	**3E-3365**	1	WEDGE-RECEPTACLE LOCK (2 PIN)	
M		2	**5C-2890**	2	NUT (M6X1 THD)	
		2	**8T-8729**	2	PIN-CONNECTOR	
BE		2	**9X-1386**		SLEEVE	
	9	2	**149-7028**	1	CABLE AS	
		2	**1S-4915**	2	LINER-CONDUIT	
		2	**1S-7251**	1	TERMINAL-RING (FOR 1/2 IN BOLT)	
		2	**3S-2093**	1	STRAP-CABLE	
E		2	**5P-0695**		CONDUIT (117CM)	
E		2	**5P-0761**		CABLE (00GA)(RED) (135CM)	
		2	**8N-0869**	1	COVER-TERMINAL (RED)	
		2	**8N-1725**	1	COVER-TERMINAL (RED)	
		2	**8L-8413**	1	STRAP-CABLE	
BE		2	**8T-2225**		TUBE-HEAT SHRINK	
		2	**3S-6049**	1	TERMINAL AS-BATTERY (POSITIVE)	

149-7027 STARTING AR-COLD WEATHER *(contd.)* i01742400

NOTE	REF NO	GRAPHIC REF	PART NUMBER	QTY	PART NAME 1 2 3 4 5 6 (PRODUCT LEVEL)	SEE PAGE
		2	**1M-6119**	1	BOLT-BATTERY TERMINAL (5/16-18X1.375 IN)	
		2	**1M-6120**	1	NUT-BATTERY TERMINAL (5/16-18 THD)	
Y	10	2	*9W-0742*	1	JUNCTION BLOCK GP	413
	11	2	**9W-2938**	1	COVER AS	
		2	**4D-6716**	3	RIVET-POP	
	12	2	**5C-6565**	2	BOLT (1/2-13X1.125 IN)	
	13	2	**8T-4223**	2	WASHER-HARD (13.5X25.5X3MM THK)	
	14	2	**4P-7581**	1	CLIP	
	15	2	**8T-9407**	3	BOLT-CARRIAGE (3/8-16X1.25 IN)	
B	16	2	**7K-1181**	12	STRAP-CABLE	
	17	2	**6V-8801**	3	NUT (3/8-16 THD)	
	18	2	**128-8405**	1	STRAP	
	19	1	**6V-8188**	1	NUT (1/2-13 THD)	
	20	1	**119-6931**	1	HARNESS AS	
	21	2	**4P-7428**	1	CLIP	
	22	1	**3K-6060**	2	LOCKNUT (3/8-16 THD)	
	23	1,2	**5P-1075**	7	WASHER-HARD (10.2X22.5X3MM THK)	
	24	2	**3E-9865**	2	LOCKNUT (1/4-20 THD)	
	25	2	**8T-4205**	2	WASHER-HARD (7.2X14.5X2MM THK)	
	26	2	**7T-7777**	1	CABLE AS	
		2	**1S-4915**	2	LINER-CONDUIT	
		2	**1S-7251**	2	TERMINAL-RING (FOR 1/2 IN BOLT)	
E		2	**5P-0695**		CONDUIT (86CM)	
E		2	**5P-0761**		CABLE (00GA)(RED) (109CM)	
		2	**8N-0869**	2	COVER-TERMINAL (RED)	
BE		2	**8T-2225**		TUBE-HEAT SHRINK	
	27	1	**6V-4611**	1	FILM-WARNING (JUMPER CABLE)	
B	28	1,2	**9X-6772**	11	STRAP-CABLE	
	29	1	**5P-8502**	1	PADLOCK GP	
A		1	**5P-8500**	1	KEY	
A		1	**8Y-6364**	1	SLEEVE	
	30	1	**9X-6772**	1	STRAP-CABLE	
	31	2	**133-9522**	1	PLATE	
	32	1	**5M-3062**	1	BOLT (3/8-16X0.75 IN)	
	33	2	**5P-4295**	1	CLIP	
	34	2	**9V-2500**	1	BRACKET AS	

A-NOT PART OF THIS GROUP
B-USE AS REQUIRED
E-ORDER BY THE CENTIMETER
M-METRIC PART
Y-SEPARATE ILLUSTRATION

149-7027 **STARTING AR-COLD WEATHER** *(contd.)* **i01742400**

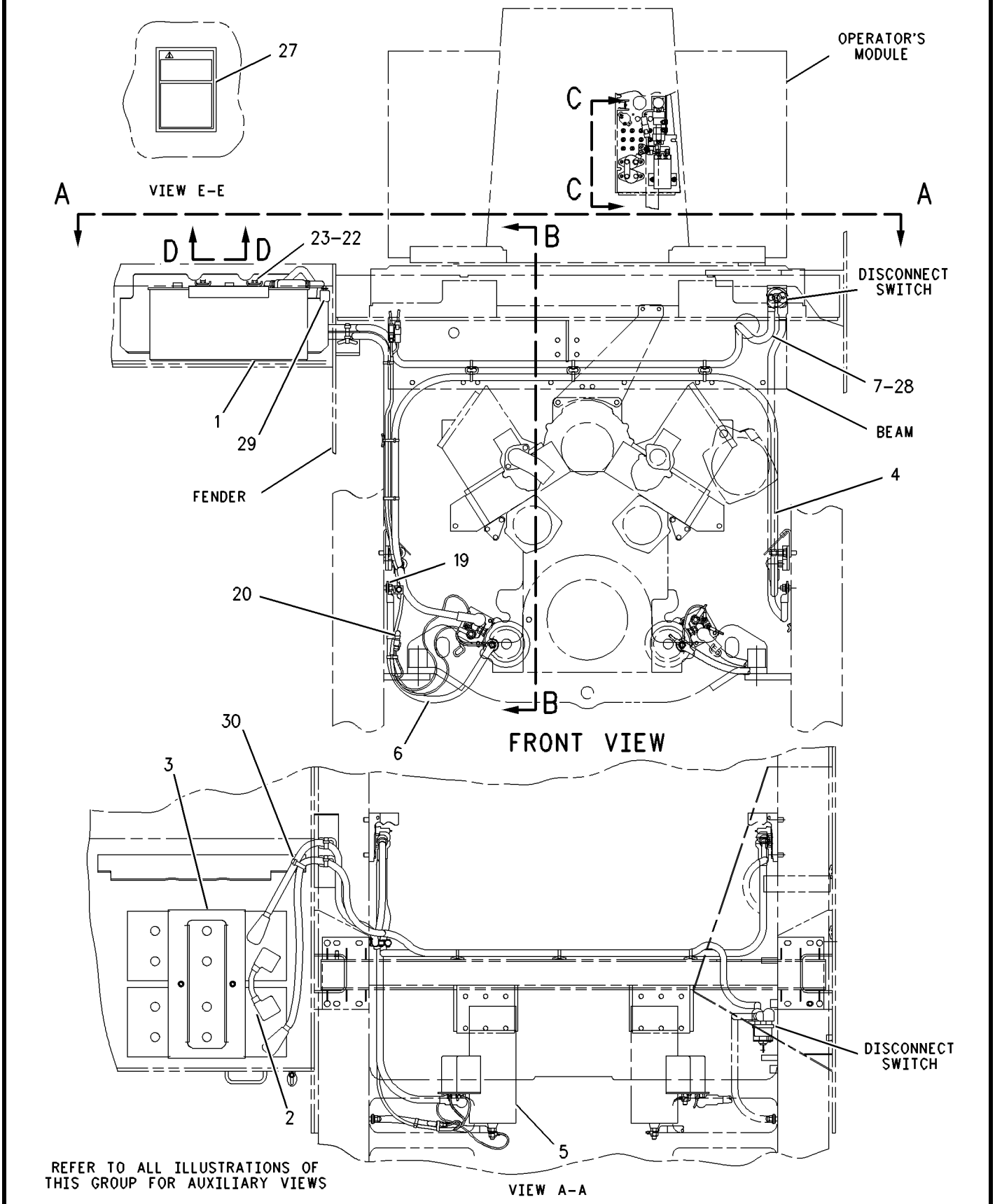

GRAPHIC #1 g00843256

149-7027 **STARTING AR-COLD WEATHER** *(contd.)* **i01742400**

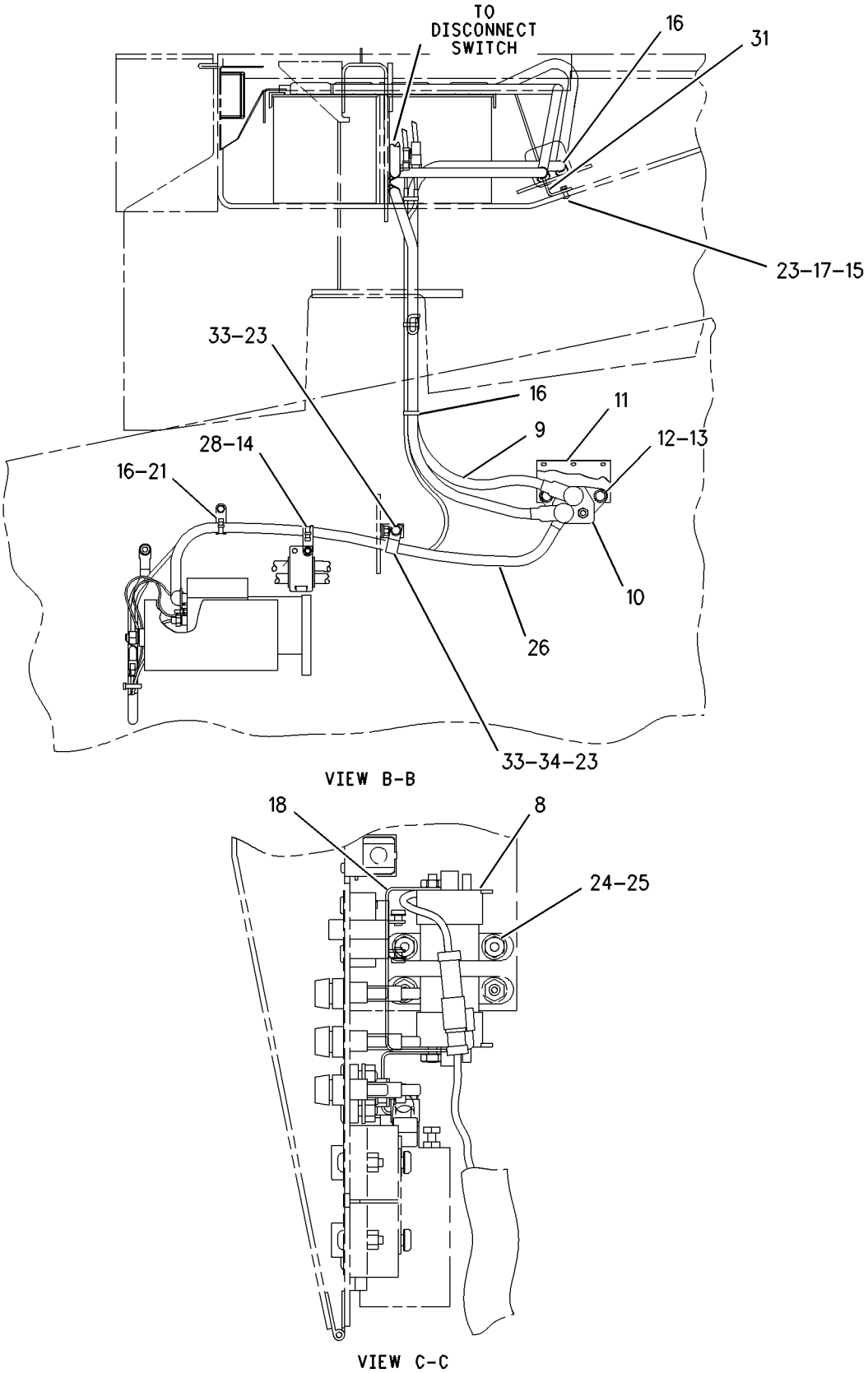

GRAPHIC #2 g00843255

6V-0513 STARTING MOTOR GP-ELECTRIC*R

S/N: 3KR1-UP
PART OF 7N-7049 STARTING MOTOR GP-ELECTRIC
FIELD REPLACEMENT FOR 6V-0928—PAGE 488
ALSO FIELD INSTALLATION

SMCS-1453, 1454, 1465 **i01670338**

NOTE	REF NO	GRAPHIC REF	PART NUMBER	QTY	PART NAME 1 2 3 4 5 6 (PRODUCT LEVEL)	SEE PAGE
	1	1	**036-9823**	13	BOLT	
	2	1	**3L-3380**	1	BUSHING-TERMINAL	
	3	1	**3T-3418**	1	FRAME AS-END	
	4	1	**3T-3423**	1	CUP	
	5	1	**9G-4101**	1	BUSHING-END	
	6	1	**3T-3424**	1	PLUG-FELT	
	7	1	**7M-0327**	1	WASHER-THRUST (17.40X25.4X1.6MM THK)	
	8	1	**7M-8651**	1	ARMATURE AS	
	9	1	**7M-0324**	1	COIL AS-FIELD	
	10	1	**9H-3757**	2	WASHER (0.516X1X0.094 IN THK)	
	11	1	**7X-0562**	6	WASHER-HARD (13.5X19X0.8MM THK)	
	12	1	**6V-8188**	6	NUT (1/2-13 THD)	
	13	1	**7M-0326**	1	CONNECTOR	
	14	1	**8T-4205**	4	WASHER-HARD (7.2X14.5X2MM THK)	
	15	1	**125-6533**	1	SOLENOID AS (STARTING MOTOR)	
		1	**3R-8801**	1	CLAMP	
	16	1	**6V-1322**	4	BOLT (1/4-20X0.375 IN)	
	17	1	**4M-1831**	4	PLUG-LEVER HOUSING	
	18	1	**7L-2894**	4	GASKET	
	19	1	**3F-0379**	12	SCREW-POLE SHOE (3/8-24 THD)	
	20	1	**7M-0325**	1	INSULATOR-COIL	
	21	1	**7F-3488**	6	SHOE-POLE	
	22	1	**1S-7446**	3	SCREW-MACHINE (8-32X0.437 THD)	
	23	1	**3T-9524**	6	BRUSH AS (STARTING MOTOR)	
	24	1	**9S-2544**	6	SCREW-HEX HEAD (8-32X11.13MM)	
	25	1	**3T-9525**	1	PLATE AS-BRUSH	
	26	1	**6T-0371**	1	INSULATOR	
	27	1	**5P-6298**	12	SCREW-MACHINE (10-32X0.5 IN)	
		1	**9F-5599**	12	LOCKWASHER	
	28	1	**7F-3525**	6	WASHER-BUSHING (.209X.39X.09MM THK)	
	29	1	**6T-0372**	1	PLATE	
	30	1	**3T-4709**	3	PLATE	
	31	1	**2L-6679**	3	PLATE-INSULATOR	
	32	1	**3T-4710**	3	PLATE	
	33	1	**6T-0363**	6	HOLDER AS-BRUSH (STARTING MOTOR BRUSH)	
					(EACH INCLUDES)	
	34	1	**3T-9494**	1	SPRING (STARTING MOTOR BRUSH)	
	35	1	**2D-6392**	1	SEAL-O-RING	
	36	1	**2J-8163**	2	SEAL-O-RING	
	37	1	**7F-3491**	2	WASHER (0.516X1X0.094 IN THK)	
	38	1	**3R-8801**	1	CLAMP	
	39	1	**6N-3826**	1	DRIVE AS-MOTOR	
	40	1	**1H-2629**	3	STRIP-INSULATION	
	41	1	**3T-3422**	1	WIRE AS	
	42	1	**9M-7606**	1	PLUNGER AS	
	43	1	**036-9821**	1	WASHER	
	44	1	**4M-1829**	1	BOOT-RUBBER	
	45	1	**4M-1828**	1	RETAINER-SPRING	
	46	1	**9M-7609**	1	SPRING	
	47	1	**1H-1023**	1	SEAL-O-RING	
	48	1	**3E-7771**	1	HOUSING AS	
	49	1	**3T-3424**	2	PLUG-FELT	
	50	1	**3T-3423**	2	CUP	
	51	1	**1M-9968**	1	BUSHING	

6V-0513 STARTING MOTOR GP-ELECTRIC *(contd.)* i01670338

NOTE	REF NO	GRAPHIC REF	PART NUMBER	QTY	PART NAME 1 2 3 4 5 6 (PRODUCT LEVEL)	SEE PAGE
	52	1	**2F-6678**	1	SEAL-LIP	
	53	1	**4L-2729**	1	WASHER (0.844X1.9X0.188 IN THK)	
	54	1	**4M-1854**	1	SHAFT-LEVER	
	55	1	**2H-3429**	2	RING-RETAINING	
	56	1	**4M-1853**	1	LEVER AS-SHIFT	
	57	1	**5M-3034**	1	LOCKNUT (5/16-24 THD)	
	58	1	**1M-9971**	1	SPACER (.840X1.72X1.88 IN THK)	
	59	1	**4M-1827**	1	RETAINER-SPRING	
	60	1	**8C-3089**	1	SEAL-O-RING	
	61	1	**3E-7768**	1	HOUSING AS	
	62	1	**4M-1896**	1	BUSHING-TERMINAL	
	63	1	**8C-9660**	3	WASHER (4.6X7.9X0.8MM THK)	
	64	1	**3T-9494**	6	SPRING (STARTING MOTOR BRUSH)	
	65	1	**5J-5314**	5	BOLT (5/16-18X1.5 IN)	
J	66	1	**3N-3763**	1	KIT-TERMINAL (STARTING MOTOR)	
JZ		1		1	INSULATOR	
JZ	67	1		1	BUSHING	
JZ	68	1		1	BUSHING	
JZ	69	1		1	WASHER	
	70	1	**7X-3373**	1	BOLT (5/16-18X0.88 IN)	
	71	1	**6N-3279**	1	INSULATOR	
	72	1	**4B-2049**	6	NUT (10-32 THD)	
	73	1	**8T-0328**	10	WASHER-HARD (5.5X10X1MM THK)	
	74	1	**8F-1434**	2	LOCKWASHER	
B	75	1	**3T-3434**	6	PLUG	
	76	1	**6T-0362**	1	INSULATOR	
	77	1	**045-4065**	4	SCREW-MACHINE (10-32X0.75 IN)	
	78	1	**125-6535**	1	COVER-STARTING MOTOR	
	79	1	**125-6536**	1	TERMINAL AS	
	80	1	**7T-9123**	1	GASKET-PLATE	

B-USE AS REQUIRED
J-KIT MARKED J INCLUDES PART(S) MARKED J
Z-NOT SERVICED SEPARATELY

6V-0513 STARTING MOTOR GP-ELECTRIC *(contd.)* i01670338

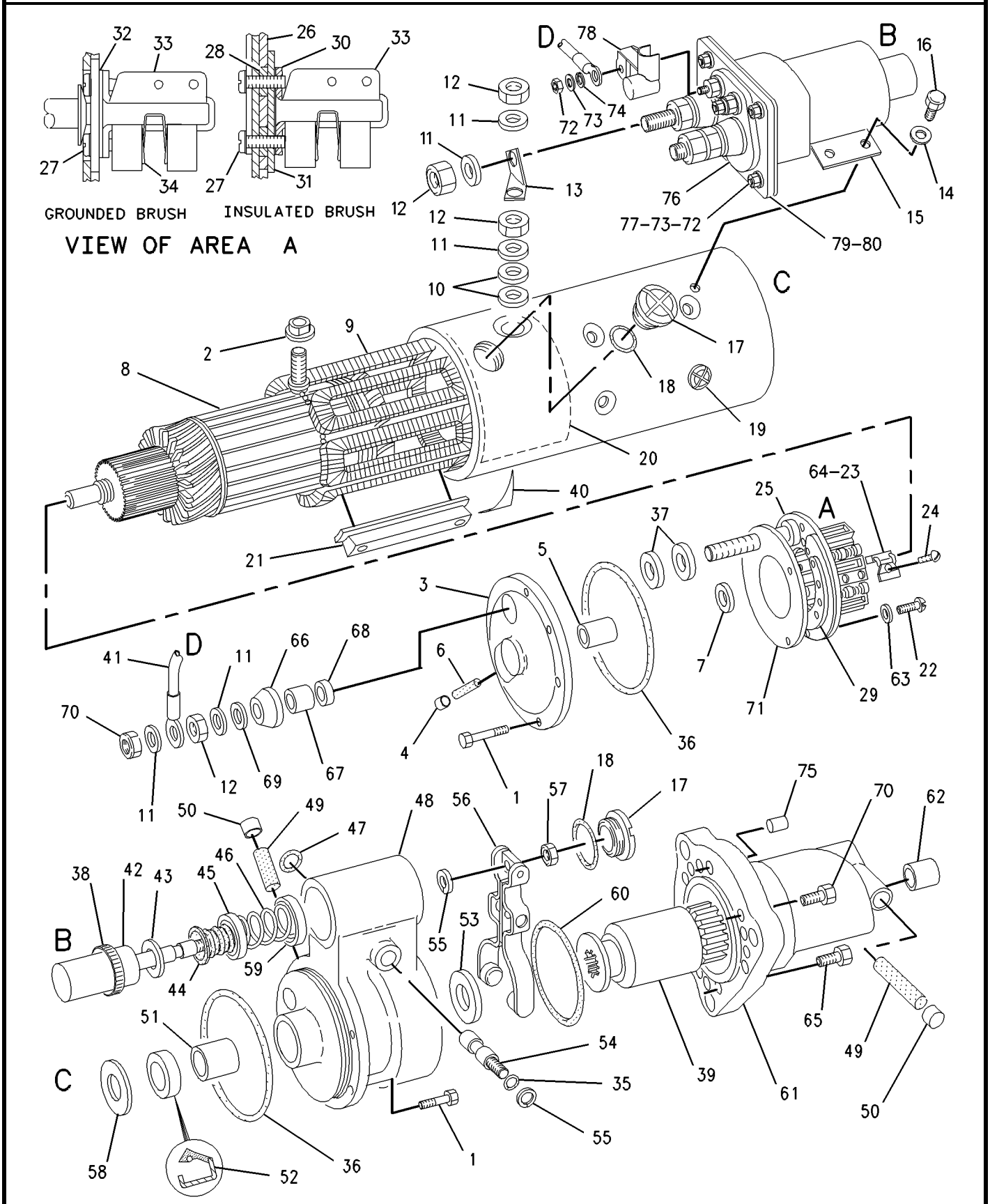

GRAPHIC #1 g00673263

MEMORANDA

ELECTRICAL AND STARTING SYSTEM

6V-0928 STARTING MOTOR GP-ELECTRIC

S/N: 3KR1-UP
PART OF 8N-8753 STARTING MOTOR GP-ELECTRIC
FIELD REPLACEMENT ORDER 6V-0513—PAGE 484
AN ATTACHMENT

SMCS-1453, 1454, 1465 **i01540925**

NOTE	REF NO	GRAPHIC REF	PART NUMBER	QTY	PART NAME 1 2 3 4 5 6 (PRODUCT LEVEL)	SEE PAGE
	1	1	**036-9823**	13	BOLT	
	2	1	**3L-3380**	1	BUSHING-TERMINAL	
	3	1	**3T-3418**	1	FRAME AS-END	
	4	1	**3T-3423**	1	CUP	
	5	1	**9G-4101**	1	BUSHING-END	
	6	1	**3T-3424**	1	PLUG-FELT	
	7	1	**7M-0327**	1	WASHER-THRUST (17.40X25.4X1.6MM THK)	
	8	1	**7M-8651**	1	ARMATURE AS	
	9	1	**7M-0324**	1	COIL AS-FIELD	
	10	1	**9H-3757**	2	WASHER (0.516X1X0.094 IN THK)	
	11	1	**7X-0562**	6	WASHER-HARD (13.5X19X0.8MM THK)	
	12	1	**6V-8188**	6	NUT (1/2-13 THD)	
	13	1	**7M-0326**	1	CONNECTOR	
	14	1	**8T-4205**	4	WASHER-HARD (7.2X14.5X2MM THK)	
Y	15	1	**3T-4704**	1	SOLENOID AS-STARTING MOTOR	472
	16	1	**6V-1322**	4	BOLT (1/4-20X0.375 IN)	
	17	1	**4M-1831**	4	PLUG-LEVER HOUSING	
	18	1	**7L-2894**	4	GASKET	
	19	1	**3F-0379**	12	SCREW-POLE SHOE	
	20	1	**7M-0325**	1	INSULATOR-COIL	
	21	1	**7F-3488**	6	SHOE-POLE	
	22	1	**1S-7446**	3	SCREW-MACHINE (8-32X0.437 THD)	
	23	1	**3T-9524**	6	BRUSH AS	
	24	1	**9S-2544**	9	SCREW-HEX HEAD (8-32X11.13MM)	
	25	1	**3T-9525**	1	PLATE AS-BRUSH	
	26	1	**6T-0371**	1	INSULATOR	
	27	1	**3T-4711**	12	SCREW AS	
		1	**9F-5599**	12	LOCKWASHER	
	28	1	**7F-3525**	6	WASHER-BUSHING	
	29	1	**6T-0372**	1	PLATE	
	30	1	**3T-4709**	3	PLATE	
	31	1	**2L-6679**	3	PLATE-INSULATOR	
	32	1	**3T-4710**	3	PLATE	
	33	1	**6T-0363**	6	HOLDER AS-BRUSH	
					(EACH INCLUDES)	
	34	1	**3T-9494**	1	SPRING-BRUSH	
	35	1	**2D-6392**	1	SEAL-O-RING	
	36	1	**2J-8163**	2	SEAL-O-RING	
	37	1	**7F-3491**	2	WASHER (0.516X1X0.094 IN THK)	
	38	1	**3R-8801**	1	CLAMP-BOOT	
	39	1	**6N-3826**	1	DRIVE AS-MOTOR	
	40	1	**1H-2629**	3	STRIP-INSULATION	
	41	1	**3T-3422**	1	WIRE AS	
	42	1	**9M-7606**	1	PLUNGER AS	
	43	1	**036-9821**	1	WASHER	
	44	1	**4M-1829**	1	BOOT-RUBBER	
	45	1	**4M-1828**	1	RETAINER-SPRING	
	46	1	**9M-7609**	1	SPRING	
	47	1	**1H-1023**	1	SEAL-O-RING	
	48	1	**3E-7771**	1	HOUSING AS	
	49	1	**3T-3424**	3	PLUG-FELT	
	50	1	**3T-3423**	3	CUP	
	51	1	**1M-9968**	1	BUSHING	
	52	1	**2F-6678**	1	SEAL-LIP	

6V-0928 STARTING MOTOR GP-ELECTRIC *(contd.)*

i01540925

NOTE	REF NO	GRAPHIC REF	PART NUMBER	QTY	PART NAME 1 2 3 4 5 6 (PRODUCT LEVEL)	SEE PAGE
	53	1	**4L-2729**	1	WASHER (0.844X1.9X0.188 IN THK)	
	54	1	**4M-1854**	1	SHAFT-LEVER	
	55	1	**2H-3429**	2	RING-RETAINING	
	56	1	**4M-1853**	1	LEVER AS-SHIFT	
	57	1	**5M-3034**	1	LOCKNUT	
	58	1	**1M-9971**	1	SPACER	
	59	1	**4M-1827**	1	RETAINER-SPRING	
	60	1	**8C-3089**	1	SEAL-O-RING	
	61	1	**3E-7768**	1	HOUSING AS	
	62	1	**4M-1896**	1	BUSHING-TERMINAL	
	63	1	**8C-9660**	3	WASHER (4.6X7.9X0.8MM THK)	
	64	1	**3T-9494**	6	SPRING-BRUSH	
	65	1	**5J-5314**	5	BOLT (5/16-18X1.5 IN)	
J	66	1	**3N-3763**	1	KIT-TERMINAL	
JZ		1		1	INSULATOR	
JZ	67	1		1	BUSHING	
JZ	68	1		1	BUSHING	
JZ	69	1		1	WASHER (0.38X0.88X0.02 IN THK)	
	70	1	**7X-3373**	1	BOLT (5/16-18X0.88 IN)	
	71	1	**6N-3279**	1	INSULATOR	
	72	1	**4B-2049**	6	NUT (10-32 THD)	
	73	1	**8T-0328**	10	WASHER-HARD (5.5X10X1MM THK)	
	74	1	**8F-1434**	2	LOCKWASHER	
B	75	1	**3T-3434**	6	PLUG	
	76	1	**125-6537**	1	INSULATOR	
	77	1	**045-4065**	4	SCREW-MACHINE (10-32X0.75 IN)	
	78	1	**125-6536**	1	TERMINAL AS	
		1	**7T-9123**	1	GASKET-PLATE	
	79	1	**125-6535**	1	COVER-STARTING MOTOR	

B-USE AS REQUIRED
J-KIT MARKED J INCLUDES PARTS MARKED J
Y-SEPARATE ILLUSTRATION
Z-NOT SERVICED SEPARATELY

6V-0928 STARTING MOTOR GP-ELECTRIC *(contd.)*

i01540925

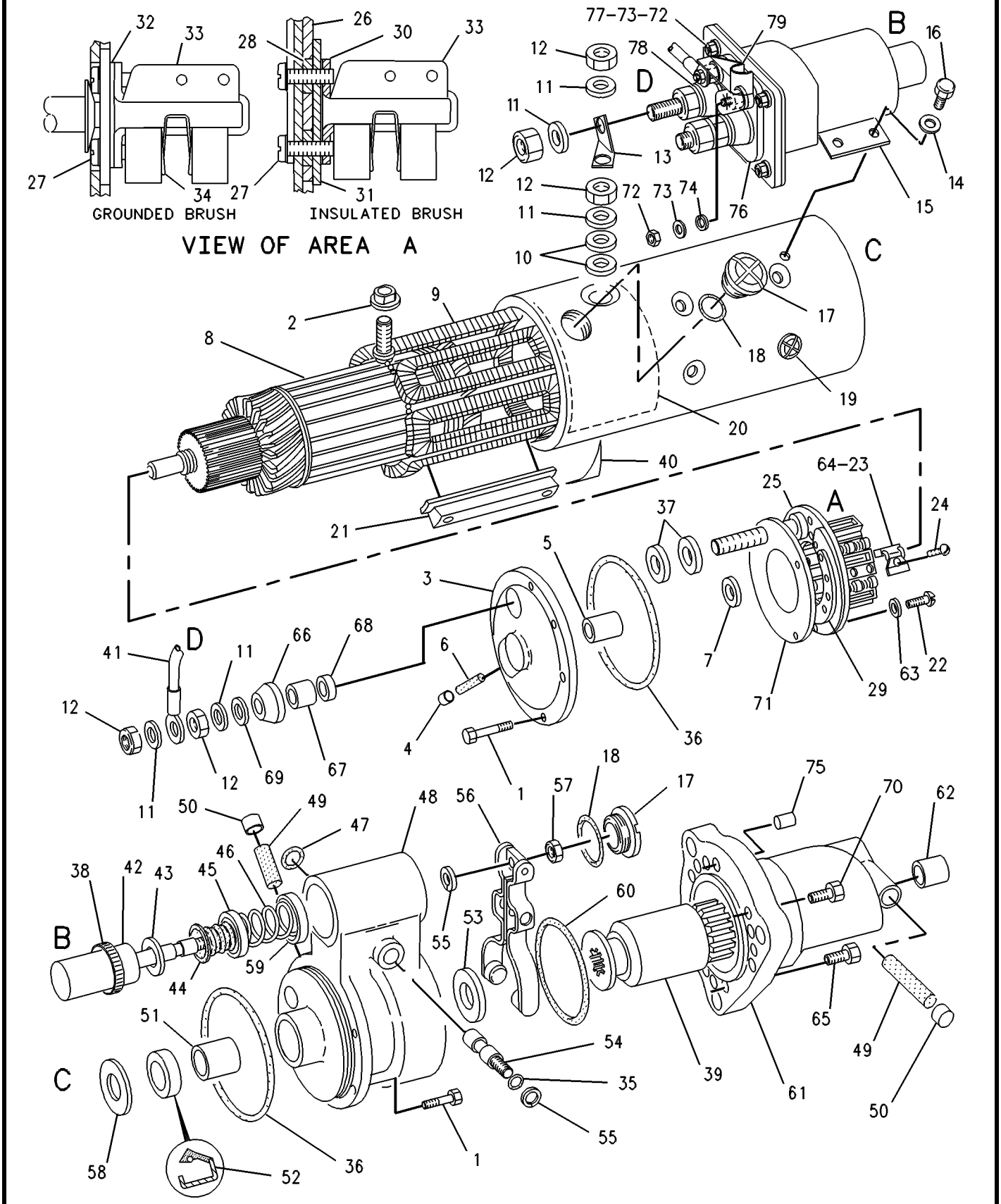

GRAPHIC #1

g00256599

ELECTRICAL AND STARTING SYSTEM

7N-7049 STARTING MOTOR GP-ELECTRIC

S/N: 3KR1-UP

SMCS-1453, 1454, 1465 **i00581500**

NOTE	REF NO	GRAPHIC REF	PART NUMBER	QTY	PART NAME 1 2 3 4 5 6 (PRODUCT LEVEL)	SEE PAGE
CYR	1	1	**6V-0513**	1	STARTING MOTOR GP-ELECTRIC	484
	2	1	**8S-2332**	3	BOLT-12 POINT HEAD (5/8-11X1.75IN)	
	3	1	**7N-6494**	1	GASKET	
	4	1	**5R-7755**	1	WIRE AS	

C-CHANGE FROM PREVIOUS TYPE
R-REMFG PART MAY BE AVAILABLE
Y-SEPARATE ILLUSTRATION

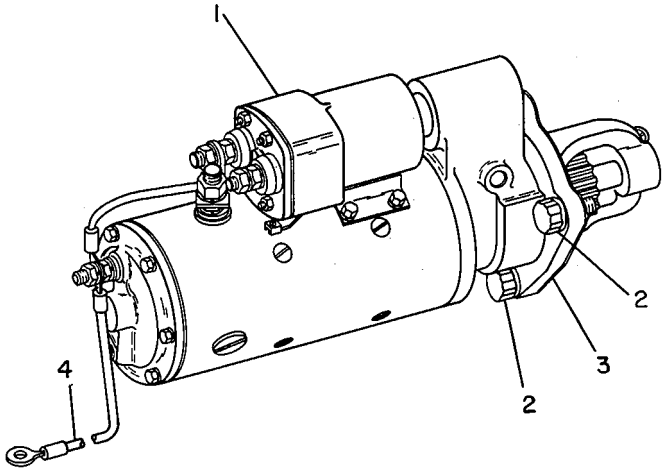

GRAPHIC #1 g00169724

ELECTRICAL AND STARTING SYSTEM

8N-8753 STARTING MOTOR GP-ELECTRIC

S/N: 3KR1-UP
24 VOLT
PART OF 116-5829, 149-7027 STARTING AR-COLD WEATHER
AN ATTACHMENT

SMCS-1453, 1454, 1465 **i00596795**

NOTE	REF NO	GRAPHIC REF	PART NUMBER	QTY	PART NAME 1 2 3 4 5 6 (PRODUCT LEVEL)	SEE PAGE
CY	1	1	*6V-0928*	1	STARTING MOTOR GP-ELECTRIC	488
	2	1	**8S-2332**	3	BOLT-12 POINT HEAD (5/8-11X1.75IN)	
	3	1	**7N-6494**	1	GASKET	
	4	1	**5R-7755**	1	WIRE AS	

C-CHANGE FROM PREVIOUS TYPE
Y-SEPARATE ILLUSTRATION

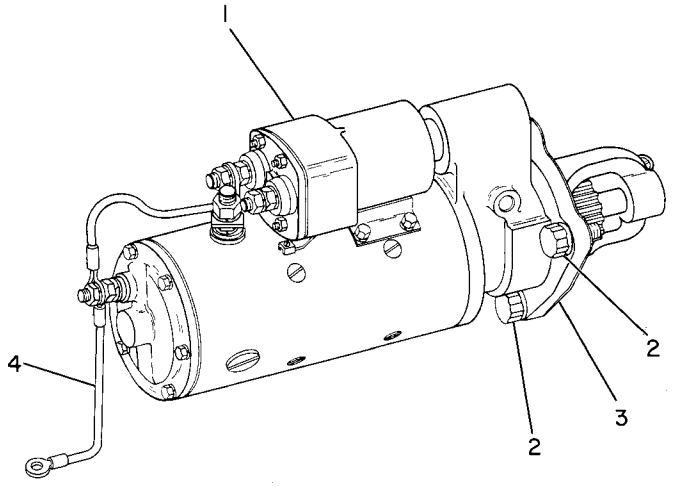

GRAPHIC #1 g00282511

MEMORANDA

ELECTRICAL AND STARTING SYSTEM

123-8686 STARTING MOTOR GP-ELECTRIC*R

S/N: 3KR1-UP
24 VOLT
PART OF 116-6769 PRELUBRICATION AR-ENGINE
AN ATTACHMENT

SMCS-1453, 1454, 1465 **i01742462**

NOTE	REF NO	GRAPHIC REF	PART NUMBER	QTY	PART NAME 1 2 3 4 5 6 (PRODUCT LEVEL)	SEE PAGE
	1	1	**7M-0326**	1	CONNECTOR	
	2	1	**9H-3757**	2	WASHER (0.516X1X0.094 IN THK)	
	3	1	**1S-7446**	3	SCREW-MACHINE (8-32X0.437 THD)	
	4	1	**8C-9660**	3	WASHER (4.6X7.9X0.8MM THK)	
	5	1	**9S-2544**	9	SCREW-HEX HEAD (8-32X11.13MM)	
	6	1	**4L-7124**	4	BOLT (1/4-20X1.25 IN)	
	7	1	**117-0610**	1	KIT-BEARING (STARTER)	
					(INCLUDES WASHERS & BEARING)	
	8	1	**125-6536**	1	TERMINAL AS	
	9	1	**7F-3491**	2	WASHER (0.516X1X0.094 IN THK)	
	10	1	**3T-3422**	1	WIRE AS	
	11	1	**2J-8163**	2	SEAL-O-RING	
	12	1	**7X-3373**	1	BOLT (5/16-18X0.88 IN)	
	13	1	**3T-3434**	6	PLUG	
	14	1	**5J-5314**	5	BOLT (5/16-18X1.5 IN)	
	15	1	**3L-3380**	1	BUSHING-TERMINAL	
	16	1	**036-9821**	1	WASHER	
	17	1	**4M-1828**	1	RETAINER-SPRING	
	18	1	**4M-1829**	1	BOOT-RUBBER	
	19	1	**9M-7606**	1	PLUNGER AS	
	20	1	**9M-7609**	1	SPRING	
	21	1	**4M-1827**	1	RETAINER-SPRING	
	22	1	**8C-3089**	1	SEAL-O-RING	
	23	1	**4M-1853**	1	LEVER AS-SHIFT	
	24	1	**5M-3034**	1	LOCKNUT (5/16-24 THD)	
	25	1	**7L-2894**	4	GASKET	
	26	1	**4M-1831**	4	PLUG-LEVER HOUSING	
	27	1	**4M-1854**	1	SHAFT-LEVER	
	28	1	**1H-1023**	1	SEAL-O-RING	
	29	1	**2D-6392**	1	SEAL-O-RING	
	30	1	**3E-7768**	1	HOUSING AS	
	31	1	**6N-3826**	1	DRIVE AS-MOTOR	
	32	1	**2H-3429**	2	RING-RETAINING	
	33	1	**6V-1322**	4	BOLT (1/4-20X0.375 IN)	
	34	1	**8T-4205**	4	WASHER-HARD (7.2X14.5X2MM THK)	
	35	1	**6N-3279**	1	INSULATOR	
	36	1	**036-9823**	13	BOLT	
	37	1	**111-9862**	1	COVER-STARTING MOTOR	
	38	1	**1H-2629**	3	STRIP-INSULATION	
	39	1	**7M-0324**	1	COIL AS-FIELD	
	40	1	**3F-0379**	12	SCREW-POLE SHOE (3/8-24 THD)	
	41	1	**7F-3488**	6	SHOE-POLE	
	42	1	**111-9864**	1	GASKET	
	43	1	**7M-0325**	1	INSULATOR-COIL	
	44	1	**3T-9524**	6	BRUSH AS	
	45	1	**125-6533**	1	SOLENOID AS	
		1	**3R-8801**	1	CLAMP	
	46	1	**125-6537**	1	INSULATOR	
	47	1	**3R-8801**	1	CLAMP	
	48	1	**8F-1434**	2	LOCKWASHER	
	49	1	**6V-8188**	6	NUT (1/2-13 THD)	
	50	1	**7X-0562**	6	WASHER-HARD (13.5X19X0.8MM THK)	
	51	1	**4B-2049**	6	NUT (10-32 THD)	
	52	1	**8T-0328**	10	WASHER-HARD (5.5X10X1MM THK)	

123-8686 STARTING MOTOR GP-ELECTRIC *(contd.)* i01742462

NOTE	REF NO	GRAPHIC REF	PART NUMBER	QTY	PART NAME 1 2 3 4 5 6 (PRODUCT LEVEL)	SEE PAGE
	53	1	**3T-9494**	6	SPRING	
	54	1	**123-9776**	1	ARMATURE AS-STARTING MOTOR	
	55	1	**123-9773**	1	HOUSING AS-STARTING MOTOR	
	56	1	**3T-3424**	2	PLUG-FELT	
	57	1	**3T-3423**	2	CUP	
	58	1	**1M-9968**	1	BUSHING	
	59	1	**2F-6678**	1	SEAL-LIP	
	60	1	**4M-1896**	1	BUSHING-TERMINAL	
	61	1	**045-4065**	4	SCREW-MACHINE (10-32X0.75 IN)	
	62	1	**6V-8373**	3	SCREW-MACHINE (6-32X0.187 IN)	
	63	1	**9G-6770**	1	CONTACT AS	
	64	1	**6T-1120**	1	BUSHING-TERMINAL	
	65	1	**4M-1815**	1	SPRING-CONTACT	
	66	1	**125-6535**	1	COVER-STARTING MOTOR	
	67	1	**7T-9123**	1	GASKET-PLATE	
	68	1	**3T-9525**	1	PLATE AS-BRUSH	
	69	1	**6T-0371**	1	INSULATOR	
	70	1	**5P-6298**	12	SCREW-MACHINE (10-32X0.5 IN)	
		1	**9F-5599**	12	LOCKWASHER	
	71	1	**7F-3525**	6	WASHER-BUSHING (.209X.39X.09MM THK)	
	72	1	**6T-0372**	1	PLATE (OUTSIDE)	
	73	1	**3T-4709**	3	PLATE (.51MM THK)	
	74	1	**2L-6679**	3	PLATE-INSULATOR	
	75	1	**3T-4710**	3	PLATE (1.6MM THK)	
	76	1	**6T-0363**	6	HOLDER AS-BRUSH	
J	77	1	**3N-3763**	1	KIT-TERMINAL	
JZ	78	1		1	BUSHING	
JZ	79	1		1	WASHER (0.38X0.88X0.02 IN THK)	
JZ	80	1		1	INSULATOR	
JZ	81	1		1	BUSHING	
	82	1	**111-9866**	1	KIT-STARTING MOTOR GEAR	
	83	1	**147-0633**	1	HOUSING AS	

J-KIT MARKED J INCLUDES PART(S) MARKED J
Z-NOT SERVICED SEPARATELY

123-8686 STARTING MOTOR GP-ELECTRIC *(contd.)* i01742462

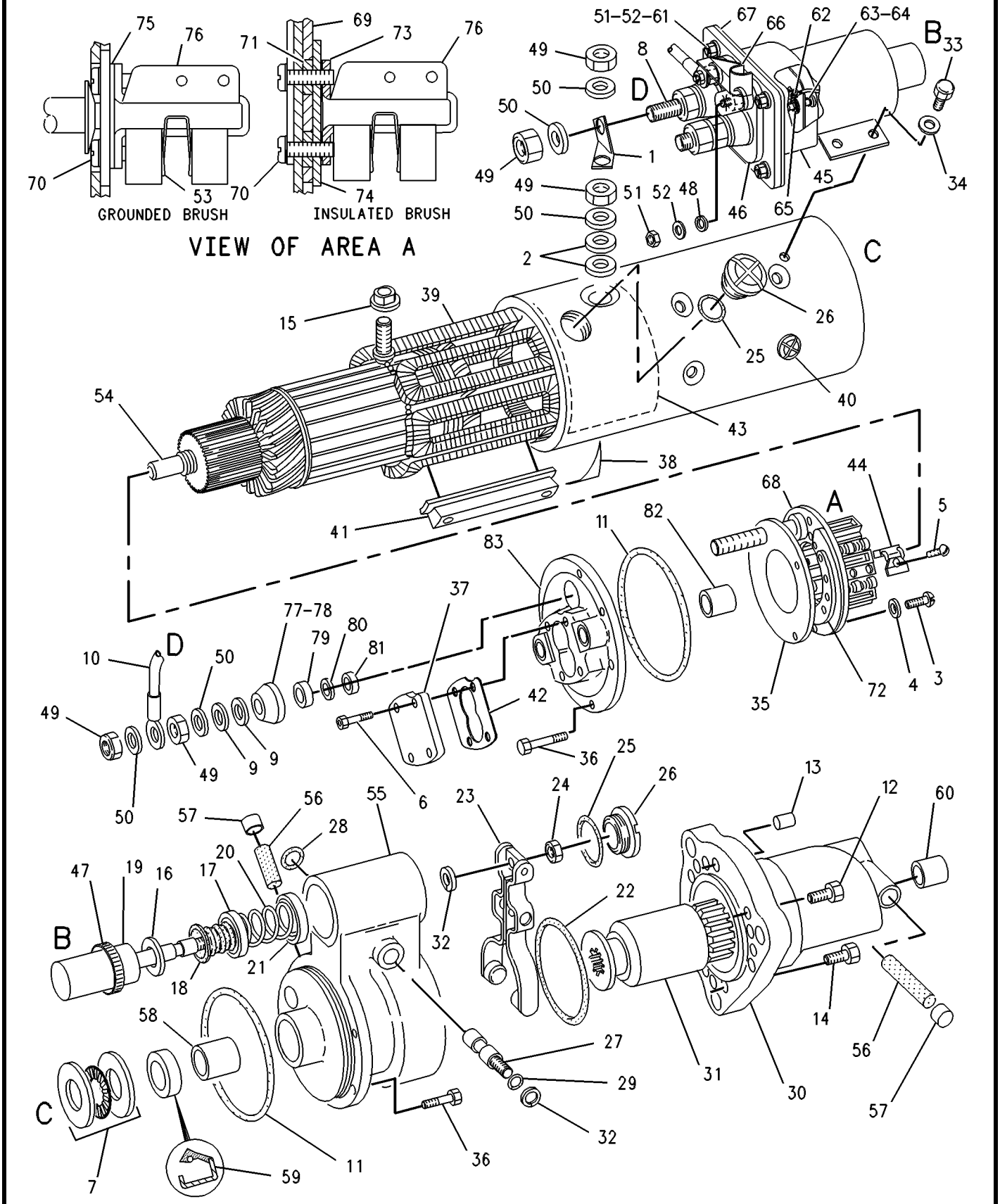

GRAPHIC #1 g00282910

9X-7781 SWITCH GP-BYPASS

S/N: 3KR1-1453
PART OF 106-8484, 109-5749 BATTERY & WIRING GP
FIELD REPLACEMENT ORDER 164-7577—PAGE 498, 2-8T-8730 SOCKET-CONNECTOR,
1-155-2270 KIT-CONNECTING PLUG

SMCS-1408 **i01449522**

NOTE	REF NO	GRAPHIC REF	PART NUMBER	QTY	PART NAME 1 2 3 4 5 6 (PRODUCT LEVEL)	SEE PAGE
	1	1	**4B-4863**	2	WASHER (4.7X11X1.2MM THK)	
	2	1	**9W-1461**	2	WASHER (4.42X10.29X1.19MM THK)	
	3	1	**3D-2824**	1	SEAL-O-RING	
	4	1	**8J-2283**	2	RING-SNAP	
	5	1	**9X-8071**	1	SPRING	
	6	1	**5P-9262**	4	SEAL-O-RING	
	7	1	**4B-2043**	2	NUT (8-32 THD)	
	8	1	**9X-6551**	1	WASHER (14.9X18.5X0.8MM THK)	

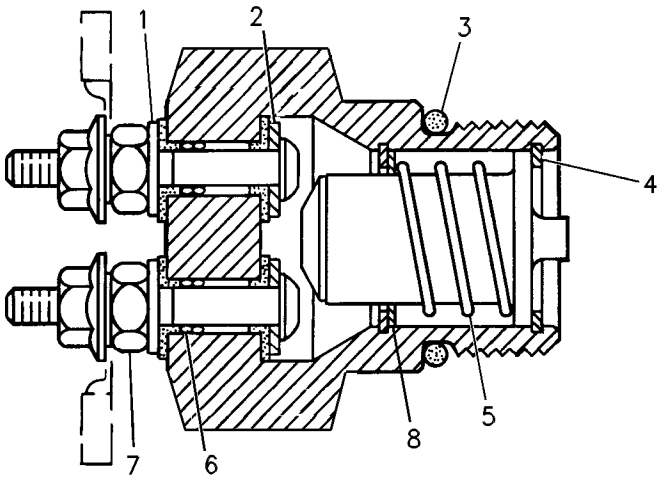

GRAPHIC #1 g00086264

164-7577 SWITCH GP-BYPASS

S/N: 3KR1454-UP
PART OF 109-5749 BATTERY & WIRING GP
FIELD REPLACEMENT FOR 9X-7781—PAGE 497

SMCS-1408 **i01742495**

NOTE	REF NO	GRAPHIC REF	PART NUMBER	QTY	PART NAME 1 2 3 4 5 6 (PRODUCT LEVEL)	SEE PAGE
BE	1	1	**9X-1813**		SLEEVE	
J	2	1	**102-8802**	1	KIT-RECEPTACLE (2 PIN)	
					(INCLUDES RECEPTACLE AS & WEDGE)	
	3	1	**186-3735**	2	PIN-CONNECTOR	
J	4	1	**3E-3365**	1	WEDGE-RECEPTACLE LOCK (2 PIN)	
	5	1	**3D-2824**	1	SEAL-O-RING	
Z	6	1		1	SWITCH AS	

B-USE AS REQUIRED
E-ORDER BY THE CENTIMETER
J-KIT MARKED J INCLUDES PART(S) MARKED J
Z-NOT SERVICED SEPARATELY

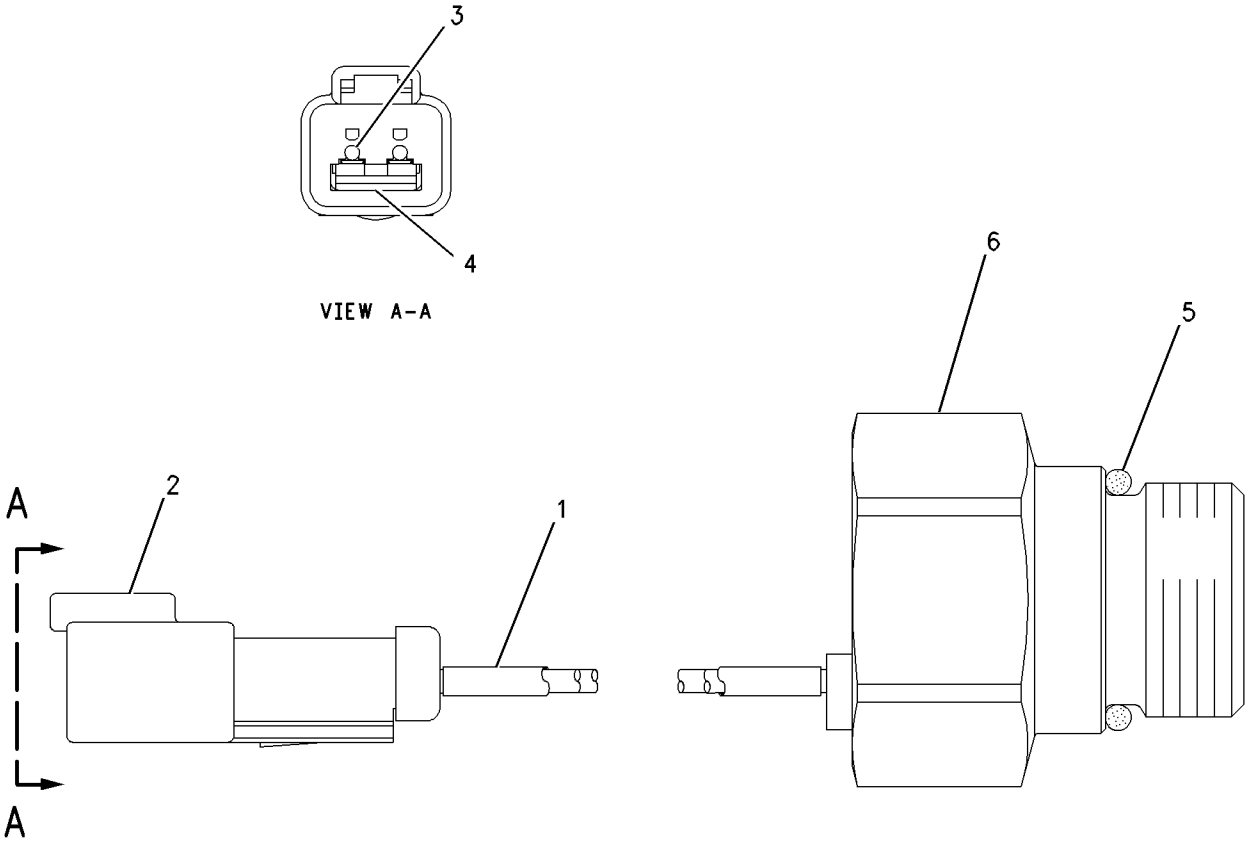

GRAPHIC #1 g00750019

7N-0719 SWITCH GP-DISCONNECT

S/N: 3KR1-UP

PART OF 106-8484, 109-5749 BATTERY & WIRING GP

SMCS-1411 **i01289277**

NOTE	REF NO	GRAPHIC REF	PART NUMBER	QTY	PART NAME 1 2 3 4 5 6 (PRODUCT LEVEL)	SEE PAGE
	1	1	**8H-5306**	1	KEY (BATTERY DISCONNECT)	
	2	1	**8H-5303**	1	NUT (3/4-16-2A THD)	
	3	1	**2H-3922**	2	LOCKWASHER (19.9X31.3X1.3MM THK)	
	4	1	**9F-5644**	2	LOCKWASHER (9.93X17.3X.9MM THK)	
	5	1	**6F-7045**	2	NUT-FULL (3/8X24 THD)	

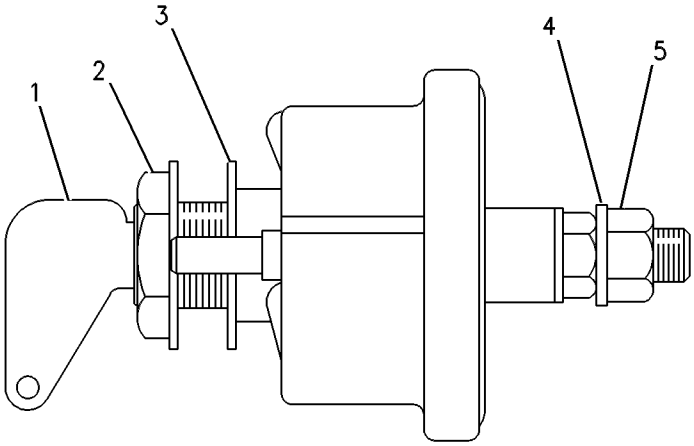

GRAPHIC #1 g00117885

100-4417 SWITCH GP-FLOW–COOLANT

S/N: 80M1-UP
PART OF 115-7641, 135-7810, 155-0058 ENGINE AR
ALSO AN ATTACHMENT

SMCS-1435 **i01547458**

NOTE	REF NO	GRAPHIC REF	PART NUMBER	QTY	PART NAME 1 2 3 4 5 6 (PRODUCT LEVEL)	SEE PAGE
Y	1	1	**171-8708**	1	SWITCH GP-FLOW (COOLANT)	501
	2	1	**2B-2695**	2	BOLT (5/16-18X0.875 IN)	
	3	1	**9M-1974**	2	WASHER-HARD (8.8X16X2MM THK)	
	4	1	**4N-3841**	1	GASKET	

Y-SEPARATE ILLUSTRATION

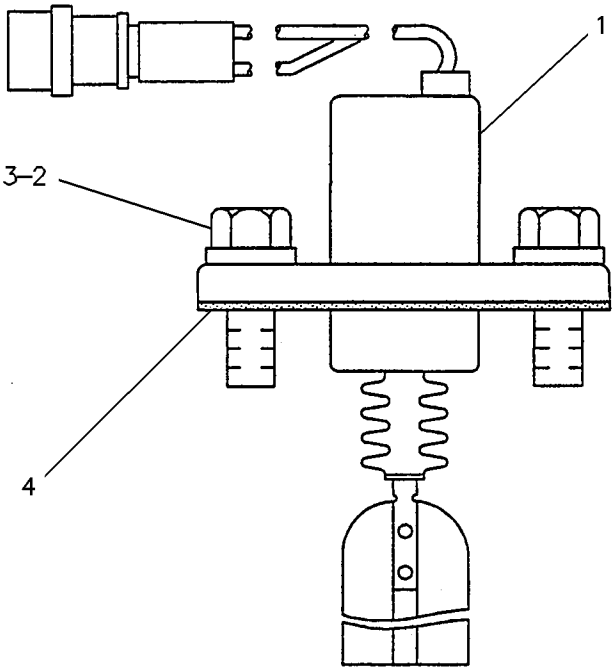

GRAPHIC #1 g00083292

ELECTRICAL AND STARTING SYSTEM

171-8708 SWITCH GP-FLOW—COOLANT

S/N: 80M1-UP
PART OF 100-4417 SWITCH GP-FLOW
ALSO AN ATTACHMENT

SMCS-1435 **i01582521**

NOTE	REF NO	GRAPHIC REF	PART NUMBER	QTY	PART NAME 1 2 3 4 5 6 (PRODUCT LEVEL)	SEE PAGE
					(NO SERVICED PARTS)	

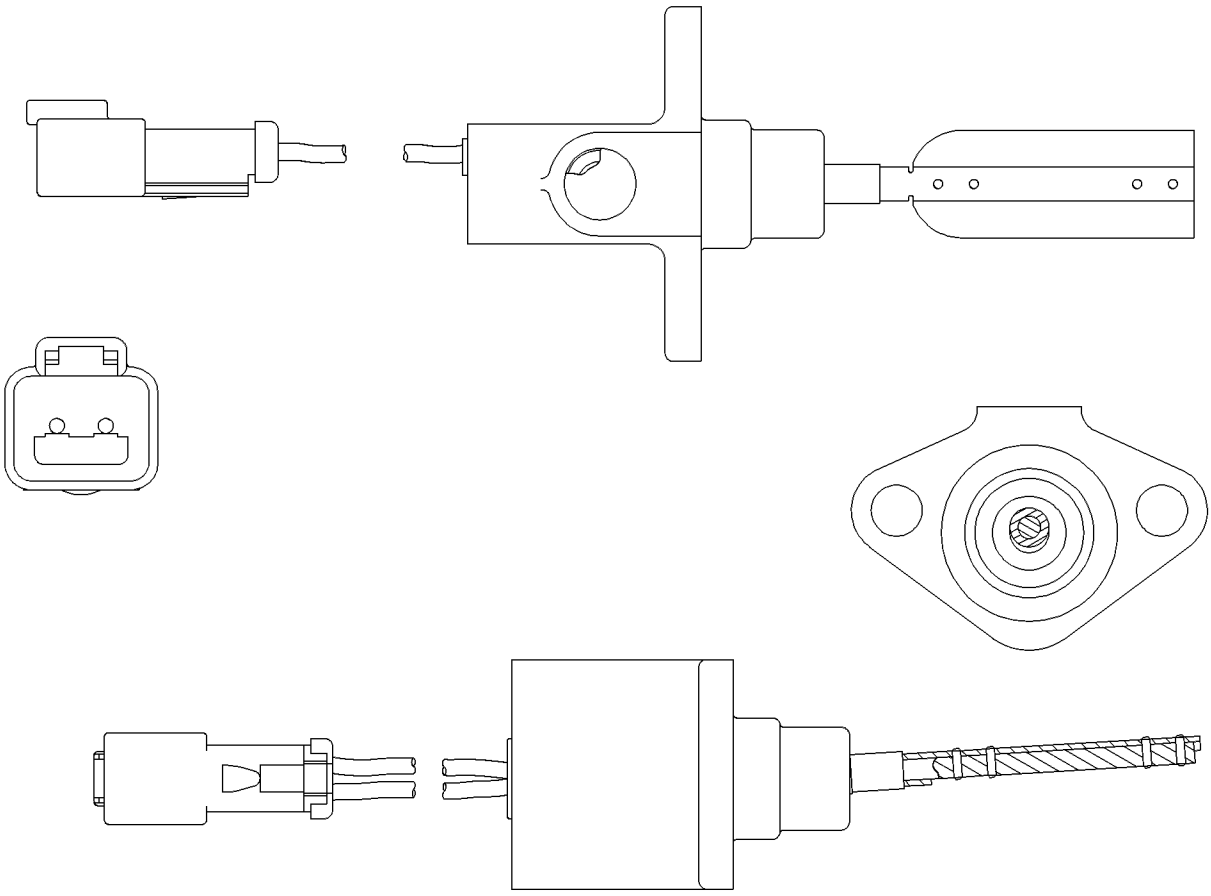

GRAPHIC #1 g00613049

3E-8680 SWITCH GP-HANDLE

S/N: 3KR1-UP
PART OF 8E-9869 LINKAGE GP-IMPLEMENT
AN ATTACHMENT

SMCS-1435 **i01601795**

NOTE	REF NO	GRAPHIC REF	PART NUMBER	QTY	PART NAME 1 2 3 4 5 6 (PRODUCT LEVEL)	SEE PAGE
	1	1	**2S-6218**	2	SCREW-MACHINE (6-32X.625 IN)	
		1	**3L-8187**	2	LOCKWASHER (NO 6 INTERNAL TOOTH)	
	2	1	**6V-1965**	1	SWITCH AS (SINGLE/DUAL TILT CONTROL)	
	3	1	**6V-1966**	1	SWITCH AS (TIP CONTROL)	
BD	4	1	**8T-6342**		TUBE (3.18MM ID)	
	5	1	**7T-3810**	1	LEVER	
	6	1	**7N-7782**	1	HOUSING-PLUG (1 PIN, 2 SOCKET)	
	7	1	**7N-7780**	1	PIN-CONNECTOR (BLADE)	
	8	1	**7N-7779**	2	SOCKET-CONNECTOR	

B-USE AS REQUIRED
D-ORDER BY THE METER

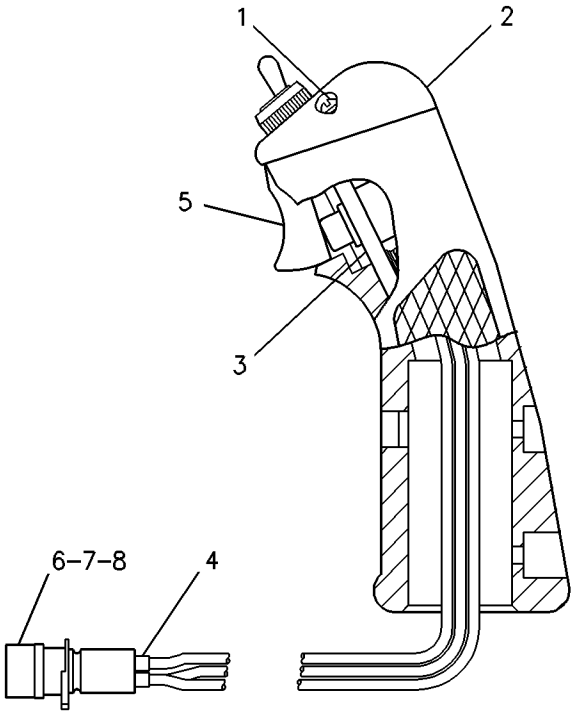

GRAPHIC #1 g00230829

ELECTRICAL AND STARTING SYSTEM

9G-7641 SWITCH GP-START–KEY

S/N: 3KR1-UP

PART OF 109-5750, 114-6664 WIRING GP-PLATFORM

SMCS-1416 **i01749552**

NOTE	REF NO	GRAPHIC REF	PART NUMBER	QTY	PART NAME 1 2 3 4 5 6 (PRODUCT LEVEL)	SEE PAGE
J	1	1	**6V-3324**	1	LOCK AS-CYLINDER	
	2	1	**6V-8362**	4	SCREW-MACHINE (8-32X0.31 IN)	
	3	1	**9B-7233**	4	LOCKWASHER	
	4	1	**7T-6799**	1	NUT-MOUNTING (1-32 THD)	

J-REQUIRES 5P8500 KEY

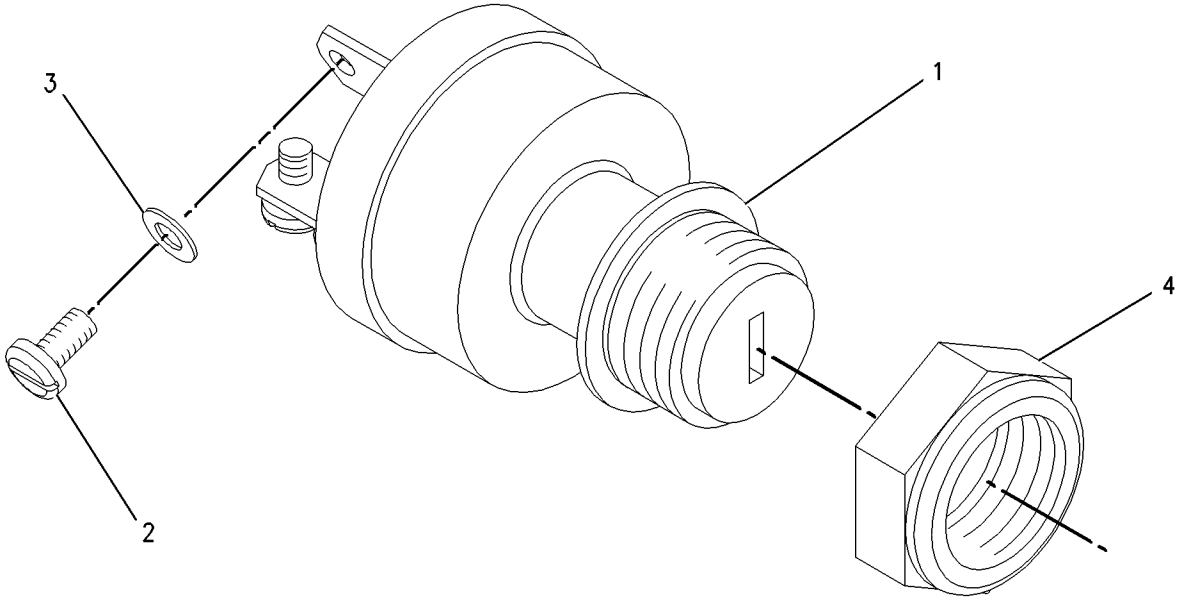

GRAPHIC #1 g00886885

ELECTRICAL AND STARTING SYSTEM

139-1585 SWITCH GP-TIMER

S/N: 3KR1-UP
PART OF 116-6769 PRELUBRICATION AR-ENGINE
AN ATTACHMENT

SMCS-1435 **i01232319**

NOTE	REF NO	GRAPHIC REF	PART NUMBER	QTY	PART NAME 1 2 3 4 5 6 (PRODUCT LEVEL)	SEE PAGE
	1	1	**6V-8186**	2	NUT-FULL (5/16-24 THD)	
	2	1	**8T-4224**	2	WASHER-HARD (8.8X16X2MM THK)	
	3	1	**3F-9556**	2	LOCKWASHER (8.4MM ID)	
	4	1	**6V-8378**	2	NUT (10-32 THD)	
	5	1	**8T-0328**	2	WASHER-HARD (1MM THK)	
	6	1	**8F-1434**	2	LOCKWASHER (5.07MM ID)	
	7	1	**102-8805**	1	KIT-RECEPTACLE (6 PIN)	
					(INCLUDES RECEPTACLE AS & WEDGE)	
	8	1	**3E-3383**	1	WEDGE-RECEPTACLE LOCK	
	9	1	**8T-8729**	5	PIN-CONNECTOR	
	10	1	**8T-8737**	1	PLUG-SEAL	
	11	1	**140-3107**	1	SWITCH AS	
	12	1	**140-3108**	1	TIMER	

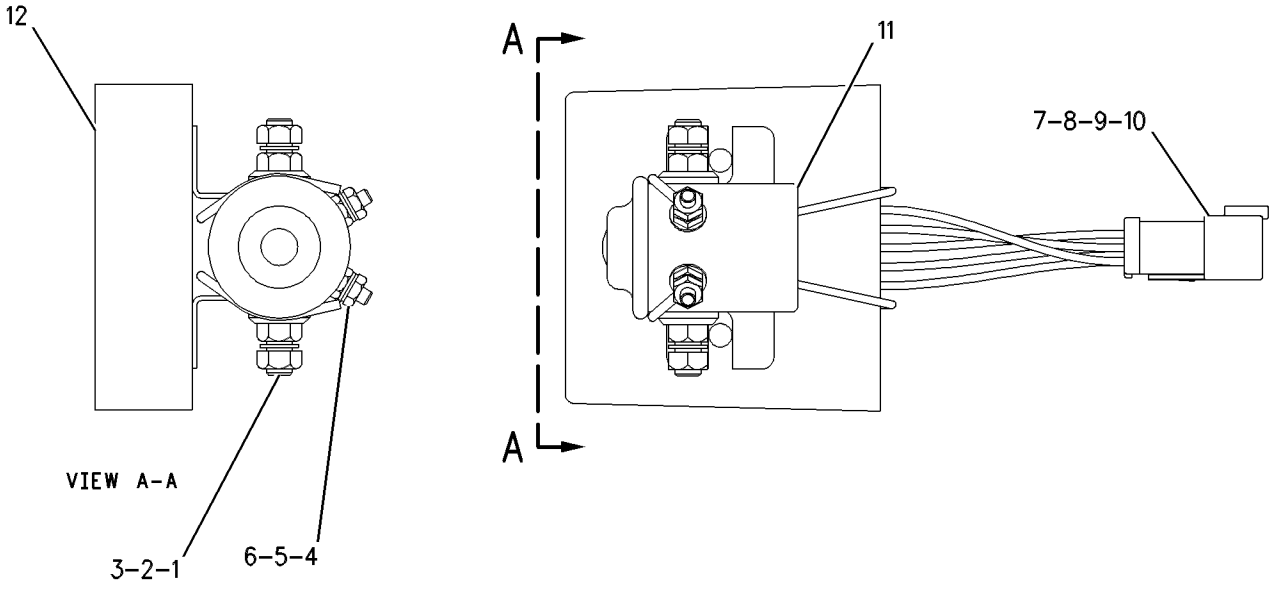

GRAPHIC #1 g00520844

MEMORANDA

ELECTRICAL AND STARTING SYSTEM

127-2423 WIRING GP-CONSOLE

S/N: 3KR1-504

PART OF 114-6664 WIRING GP-PLATFORM

SMCS-1408 **i01401196**

NOTE	REF NO	GRAPHIC REF	PART NUMBER	QTY	PART NAME 1 2 3 4 5 6 (PRODUCT LEVEL)	SEE PAGE
	1	1	**3T-0376**	1	SWITCH AS-MAGNETIC (MAIN RELAY)	
		1	**4F-2294**	2	NUT-JAM (5/16-24 THD)	
		1	**6V-8186**	2	NUT-FULL (5/16-24 THD)	
		1	**6V-8378**	2	NUT (10-32 THD)	
	2	1	**3E-7294**	2	CIRCUIT BREAKER AS (105 AMP)	
					(EACH INCLUDES)	
		1	**1H-3244**	2	LOCKWASHER	
		1	**6V-8365**	2	SCREW-MACHINE (1/4-28X.5IN)	
	3	1	**3S-9557**	4	SCREW-PAN HEAD (NO 4 X .5 IN)	
	4	1	**3T-2662**	1	CIRCUIT BREAKER AS (15 AMP)	
		1	**6V-8376**	2	SCREW-MACHINE (8-32X.25 IN)	
		1	**9B-7233**	2	LOCKWASHER	
	5	1	**4K-5122**	10	HOLDER AS-FUSE	
					(EACH INCLUDES)	
		1	**7N-2867**	1	CAP-FUSE HOLDER	
	6	1	**6N-8589**	3	CIRCUIT BREAKER AS (15 AMP)	
					(EACH INCLUDES)	
		1	**6V-8376**	2	SCREW-MACHINE (8-32X.25 IN)	
		1	**9B-7233**	2	LOCKWASHER	
	7	1	**6V-5645**	4	SCREW-MACHINE (10-32X0.87 IN)	
	8	1	**6V-7631**	1	LATCH-PAWL	
	9	1	**9G-8451**	1	BLOCK AS	
		1	**1H-3244**	1	LOCKWASHER	
		1	**4B-4276**	2	WASHER (7X16X1.6MM THK)	
		1	**4L-7124**	1	BOLT (1/4-20X1.25IN)	
		1	**6V-8185**	2	NUT (1/4-20 THD)	
	10	1	**9G-9487**	3	CIRCUIT BREAKER AS (10 AMP)	
					(EACH INCLUDES)	
		1	**6V-8376**	2	SCREW-MACHINE (8-32X.25 IN)	
		1	**9B-7233**	2	LOCKWASHER	
	11	1	**068-4209**	14	SCREW (8-32X0.75IN)	
	12	1	**125-1302**	1	SWITCH GP-MAGNETIC	
	13	1	**127-1610**	1	HARNESS AS	
	14	1	**127-2422**	1	PLATE AS	
		1	**8C-3334**	1	RIVET-TUBULAR	
	15	1	**128-1023**	1	HARNESS AS-POWER	
	16	1	**128-6157**	1	PLATE	
	17	1	**128-6316**	1	FILM-IDENTIFICATION (FUSE)	
	18	1	**128-6317**	1	FILM-IDENTIFICATION (FUSE)	
	19	1	**128-8401**	1	STRAP	
	20	1	**128-8402**	1	STRAP	
	21	1	**128-8403**	1	STRAP	
	22	1	**128-8404**	1	WIRE AS	
	23	1	**8T-4205**	6	WASHER-HARD (7.2X14.5X2MM THK)	
	24	1	**6V-8185**	6	NUT (1/4-20 THD)	
	25	1	**3K-8782**	7	FUSE (10 AMP)	
	26	1	**8M-8948**	1	FUSE (15 AMP)	
	27	1	**8M-0456**	2	FUSE (20 AMP)	
	28	1	**9G-4360**	1	CAP-CONNECTOR	
	29	1	**8T-8737**	4	PLUG-SEAL (3.07MM ID)	
	30	1	**8N-1537**	1	LOCKWASHER	
	31	1	**8C-6354**	1	CAP-RECEPTACLE	
	32	1	**155-2271**	1	KIT-CONNECTING PLUG (4 PIN)	
					(INCLUDES PLUG AS & WEDGE)	

127-2423 **WIRING GP-CONSOLE** *(contd.)* **i01401196**

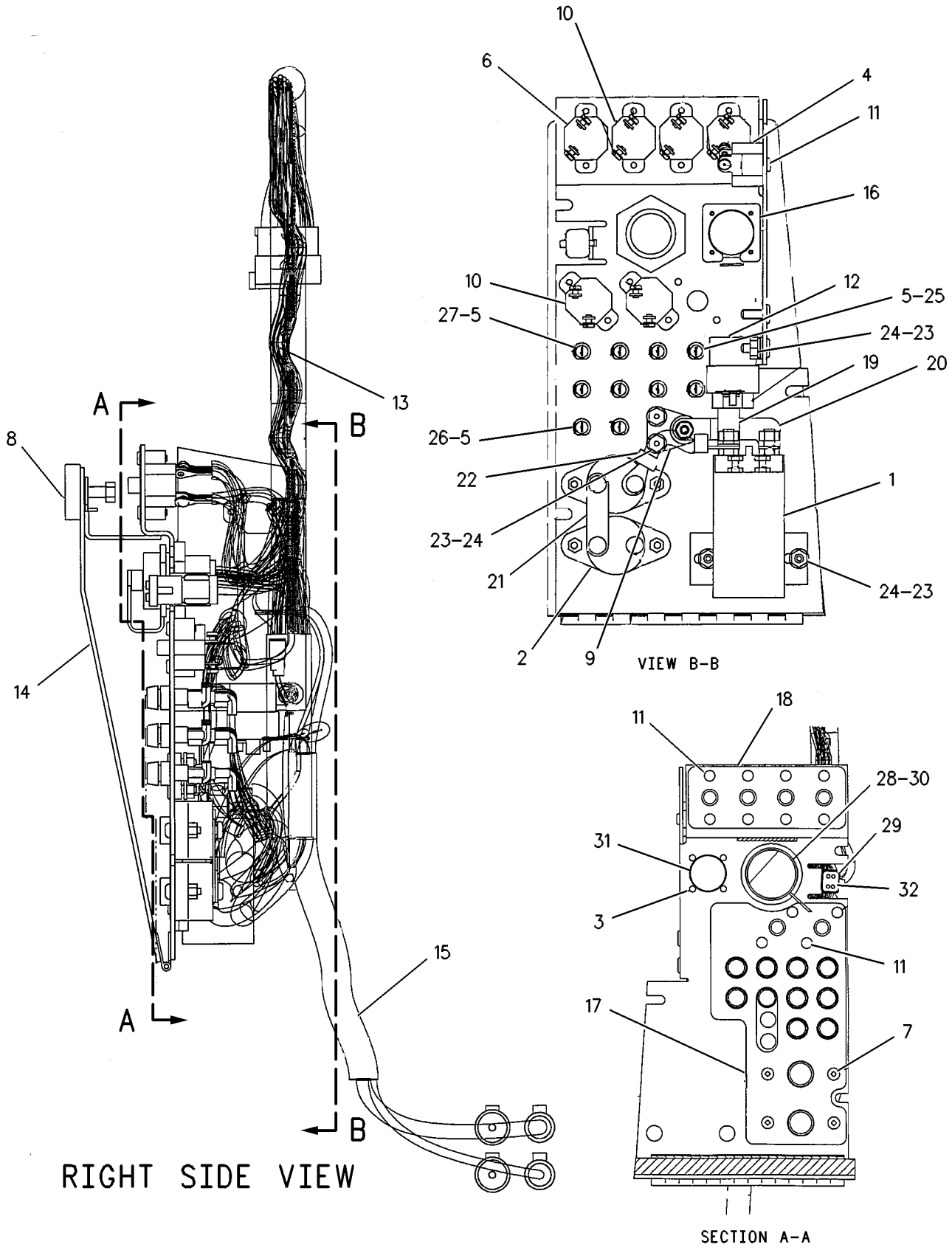

GRAPHIC #1 g00258619

ELECTRICAL AND STARTING SYSTEM

127-2423 WIRING GP-CONSOLE

S/N: 3KR505-938

PART OF 114-6664 WIRING GP-PLATFORM

SMCS-1408 **i01401201**

NOTE	REF NO	GRAPHIC REF	PART NUMBER	QTY	PART NAME 1 2 3 4 5 6 (PRODUCT LEVEL)	SEE PAGE
	1	1	**3E-7294**	1	CIRCUIT BREAKER AS (105 AMP) (ALTERNATOR)	
		1	**1H-3244**	2	LOCKWASHER	
		1	**6V-8365**	2	SCREW-MACHINE (1/4-28X.5IN)	
	2	1	**3S-9557**	4	SCREW-PAN HEAD (NO 4 X .5 IN)	
	3	1	**3T-0376**	1	SWITCH AS-MAGNETIC (MAIN RELAY)	
		1	**4F-2294**	2	NUT-JAM (5/16-24 THD)	
		1	**6V-8186**	2	NUT-FULL (5/16-24 THD)	
		1	**6V-8378**	2	NUT (10-32 THD)	
	4	1	**3T-2662**	1	CIRCUIT BREAKER AS (15 AMP) (HEAD LAMP)	
		1	**6V-8376**	2	SCREW-MACHINE (8-32X.25 IN)	
		1	**9B-7233**	2	LOCKWASHER	
	5	1	**4K-5122**	10	HOLDER AS-FUSE	
					(EACH INCLUDES)	
		1	**139-0178**	1	CAP-FUSE HOLDER	
	6	1	**6N-8589**	1	CIRCUIT BREAKER AS (15 AMP) (ENGINE)	
		1	**6V-8376**	2	SCREW-MACHINE (8-32X.25 IN)	
		1	**9B-7233**	2	LOCKWASHER	
	7	1	**6V-5645**	4	SCREW-MACHINE (10-32X0.87 IN)	
	8	1	**6V-7631**	1	LATCH-PAWL	
	9	1	**9G-8451**	1	BLOCK AS	
		1	**1H-3244**	1	LOCKWASHER	
		1	**4B-4276**	2	WASHER (7X16X1.6MM THK)	
		1	**4L-7124**	1	BOLT (1/4-20X1.25IN)	
		1	**6V-8185**	2	NUT (1/4-20 THD)	
	10	1	**9G-9487**	1	CIRCUIT BREAKER AS (10 AMP) (KEY)	
					(ELECTRONIC CLUTCH/BRAKE CONTROL LEVER)	
		1	**6V-8376**	2	SCREW-MACHINE (8-32X.25 IN)	
		1	**9B-7233**	2	LOCKWASHER	
	11	1	**068-4209**	14	SCREW (8-32X0.75IN)	
	12	1	**125-1302**	1	SWITCH GP-MAGNETIC (START RELAY)	
C	13	1	**136-7477**	1	HARNESS AS	
C	14	1	**136-7476**	1	PLATE AS	
	15	1	**128-1023**	1	HARNESS AS-POWER	
	16	1	**128-6157**	1	PLATE	
C	17	1	**134-7264**	1	FILM-IDENTIFICATION (FUSE)	
	18	1	**128-6317**	1	FILM-IDENTIFICATION (FUSE)	
	19	1	**128-8401**	1	STRAP	
	20	1	**128-8402**	1	STRAP	
	21	1	**128-8403**	1	STRAP	
	22	1	**151-8071**	1	STRAP	
C	23	1	**9X-6258**	2	SCREW-MACHINE (6-32X.50IN)	
	24	1	**8T-4205**	6	WASHER-HARD (7.2X14.5X2MM THK)	
	25	1	**6V-8185**	6	NUT (1/4-20 THD)	
	26	1	**3K-8782**	7	FUSE (10 AMP)	
	27	1	**8M-8948**	1	FUSE (15 AMP)	
	28	1	**8M-0456**	2	FUSE (20 AMP)	
	29	1	**8C-6354**	1	CAP-RECEPTACLE	
	30	1	**8N-1537**	1	LOCKWASHER	
	31	1	**9G-4360**	1	CAP-CONNECTOR	
	32	1	**102-8809**	1	KIT-CONNECTING PLUG (4 PIN)	
					(INCLUDES PLUG AS & WEDGE)	
C	33	1	**3E-3374**	1	WEDGE-PLUG LOCK	
	34	1	**8T-8737**	4	PLUG-SEAL (3.07MM ID)	
C	35	1	**7D-6922**	2	LOCKNUT (6-32 THD)	
	36	1	**3E-7294**	1	CIRCUIT BREAKER AS (105 AMP) (MAIN)	
		1	**1H-3244**	2	LOCKWASHER	

127-2423 WIRING GP-CONSOLE *(contd.)*

i01401201

NOTE	REF NO	GRAPHIC REF	PART NUMBER	QTY	PART NAME 1 2 3 4 5 6 (PRODUCT LEVEL)	SEE PAGE
		1	**6V-8365**	2	SCREW-MACHINE (1/4-28X.5IN)	
	37	1	**6N-8589**	1	CIRCUIT BREAKER AS (15 AMP) (BLOWER)	
	38	1	**6N-8589**	1	CIRCUIT BREAKER AS (15 AMP) (POWER OUTLET)	
	39	1	**9G-9487**	1	CIRCUIT BREAKER AS (10 AMP) (ENGINE START)	
	40	1	**9G-9487**	1	CIRCUIT BREAKER AS (10 AMP) (AUX)	
					(EACH CIRCUIT BREAKER AS INCLUDES)	
		1	**6V-8376**	2	SCREW-MACHINE (8-32X.25 IN)	
		1	**9B-7233**	2	LOCKWASHER	
CBF		1	**3S-2093**		STRAP-CABLE	

B-USE AS REQUIRED
C-CHANGE FROM PREVIOUS TYPE
F-NOT SHOWN

127-2423 **WIRING GP-CONSOLE** *(contd.)* **i01401201**

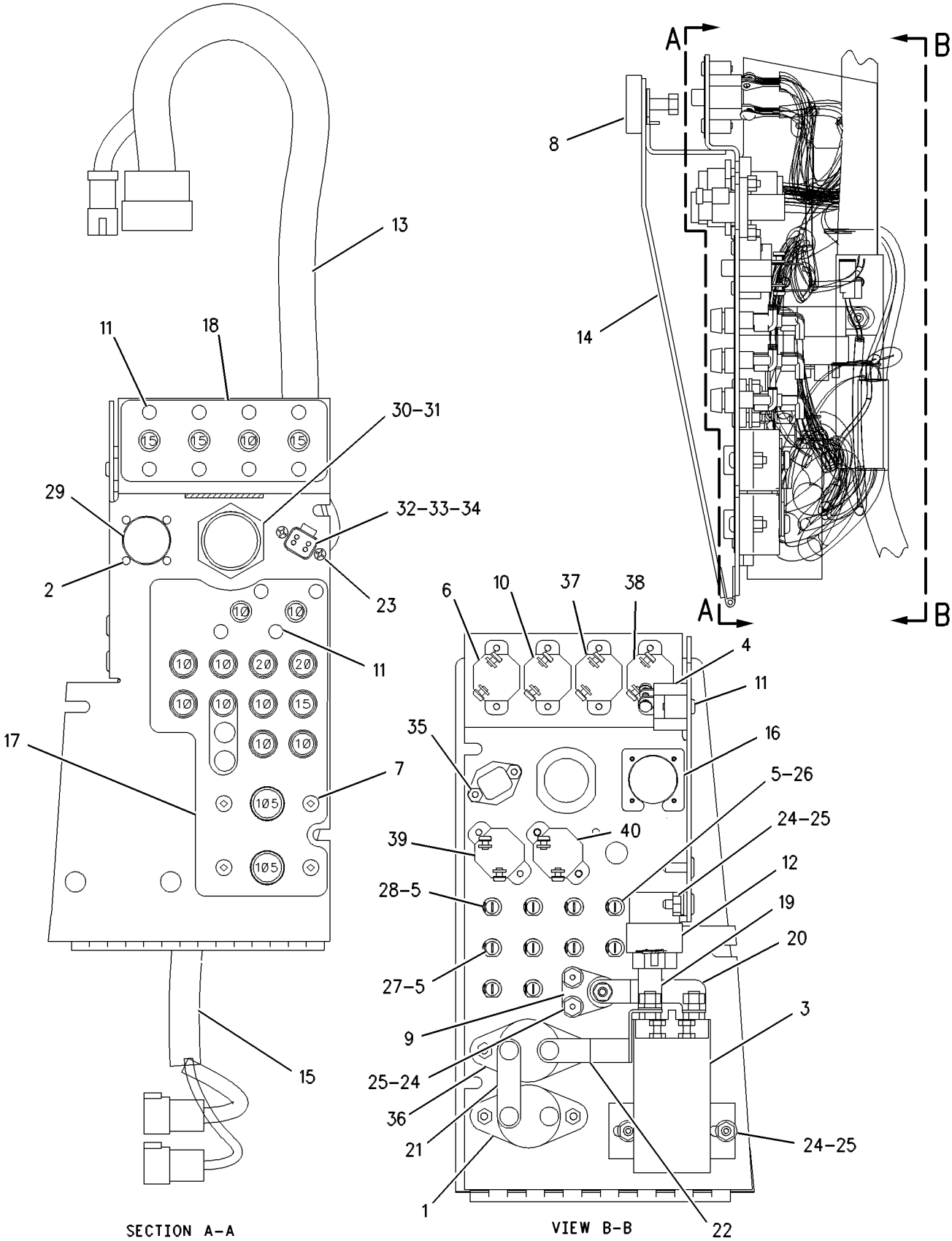

GRAPHIC #1 g00493020

MEMORANDA

ELECTRICAL AND STARTING SYSTEM

145-5150 WIRING GP-CONSOLE

S/N: 3KR939-1183

PART OF 109-5750 WIRING GP-PLATFORM

SMCS-1408 **i01335695**

NOTE	REF NO	GRAPHIC REF	PART NUMBER	QTY	PART NAME 1 2 3 4 5 6 (PRODUCT LEVEL)	SEE PAGE
	1	1	**102-8809**	1	KIT-CONNECTING PLUG (4 PIN)	
					(INCLUDES PLUG AS & WEDGE)	
	2	1	**3E-3374**	1	WEDGE-PLUG LOCK	
	3	1	**3E-7294**	1	CIRCUIT BREAKER AS (105 AMP) (MAIN)	
	4	1	**3E-7294**	1	CIRCUIT BREAKER AS (105 AMP) (ALTERNATOR)	
					(EACH CIRCUIT BREAKER AS INCLUDES)	
		1	**1H-3244**	2	LOCKWASHER (NO.14)	
		1	**6V-8365**	2	SCREW-MACHINE (1/4-28X.5IN)	
	5	1	**3T-0376**	1	SWITCH AS-MAGNETIC (MAIN RELAY)	
		1	**4F-2294**	2	NUT-JAM (5/16-24 THD)	
		1	**6V-8186**	2	NUT-FULL (5/16-24 THD)	
		1	**6V-8378**	2	NUT (10-32 THD)	
	6	1	**3T-2662**	1	CIRCUIT BREAKER AS (15 AMP) (HEADLIGHT)	
		1	**6V-8376**	2	SCREW-MACHINE (8-32X.25 IN)	
		1	**9B-7233**	2	LOCKWASHER (NO.8)	
	7	1	**4K-5122**	14	HOLDER AS-FUSE	
					(EACH INCLUDES)	
		1	**6T-8115**	1	NUT (1/2-24 THD)	
		1	**139-0178**	1	CAP-FUSE HOLDER	
	8	1	**6N-8589**	1	CIRCUIT BREAKER AS (15 AMP)	
					(DOZER BLADE & RIPPER)	
	9	1	**6N-8589**	1	CIRCUIT BREAKER AS (15 AMP) (ENGINE)	
	10	1	**6N-8589**	1	CIRCUIT BREAKER AS (15 AMP) (POWER OUTLET)	
	11	1	**6N-8589**	1	CIRCUIT BREAKER AS (15 AMP) (FAN MOTOR)	
					(EACH CIRCUIT BREAKER AS INCLUDES)	
		1	**6V-8376**	2	SCREW-MACHINE (8-32X.25 IN)	
		1	**9B-7233**	2	LOCKWASHER (NO.8)	
	12	1	**8C-6354**	1	CAP-RECEPTACLE	
	13	1	**8T-8737**	4	PLUG-SEAL	
	14	1	**9G-8451**	1	BLOCK AS	
		1	**1H-3244**	1	LOCKWASHER (NO.14)	
		1	**4B-4276**	2	WASHER (1.6MM THK)	
		1	**4L-7124**	1	BOLT (1/4-20X1.25IN)	
		1	**6V-8185**	2	NUT (1/4-20 THD)	
	15	1	**9G-9487**	1	CIRCUIT BREAKER AS (10 AMP) (ENGINE START)	
	16	1	**9G-9487**	1	CIRCUIT BREAKER AS (10 AMP)	
					(ELECTRONIC CLUTCH/BRAKE CONTROL LEVER)	
					(EACH CIRCUIT BREAKER AS INCLUDES)	
		1	**6V-8376**	2	SCREW-MACHINE (8-32X.25 IN)	
		1	**9B-7233**	2	LOCKWASHER (NO.8)	
	17	1	**068-4209**	14	SCREW (8-32X0.75IN)	
	18	1	**125-1302**	1	SWITCH GP-MAGNETIC	
					(START RELAY)	
	19	1	**128-1023**	1	HARNESS AS-POWER	
	20	1	**128-6157**	1	PLATE	
	21	1	**128-8401**	1	STRAP	
	22	1	**128-8402**	1	STRAP	
	23	1	**128-8403**	1	STRAP	
	24	1	**151-8071**	1	STRAP	
	25	1	**8M-0456**	2	FUSE (20 AMP)	
	26	1	**141-8770**	1	PLATE AS	
		1	**2V-2045**	8	STUD-WELD	
		1	**127-2419**	1	HINGE	
		1	**127-2420**	1	DOOR	
	27	1	**141-9484**	1	HARNESS AS	
	28	1	**141-9873**	1	WIRE AS	

145-5150 WIRING GP-CONSOLE *(contd.)*

i01335695

NOTE	REF NO	GRAPHIC REF	PART NUMBER	QTY	PART NAME 1 2 3 4 5 6 (PRODUCT LEVEL)	SEE PAGE
	29	1	**141-9874**	1	WIRE AS	
	30	1	**141-9875**	1	WIRE AS	
	31	1	**142-2766**	1	FILM-FUSE	
	32	1	**142-2768**	1	FILM-FUSE	
	33	1	**6V-8185**	6	NUT (1/4-20 THD)	
	34	1	**8T-4205**	6	WASHER-HARD (2MM THK)	
	35	1	**3K-8782**	10	FUSE (10 AMP)	
	36	1	**8M-8948**	2	FUSE (15 AMP)	
	37	1	**9X-6258**	2	SCREW-MACHINE (6-32X.50IN)	
	38	1	**6V-5645**	4	SCREW-MACHINE (10-32X.8 7 IN)	
	39	1	**6V-7631**	1	LATCH-PAWL	
	40	1	**7D-6922**	2	LOCKNUT (6-32 THD)	
	41	1	**3S-9557**	4	SCREW-PAN HEAD	

145-5150 **WIRING GP-CONSOLE** *(contd.)* **i01335695**

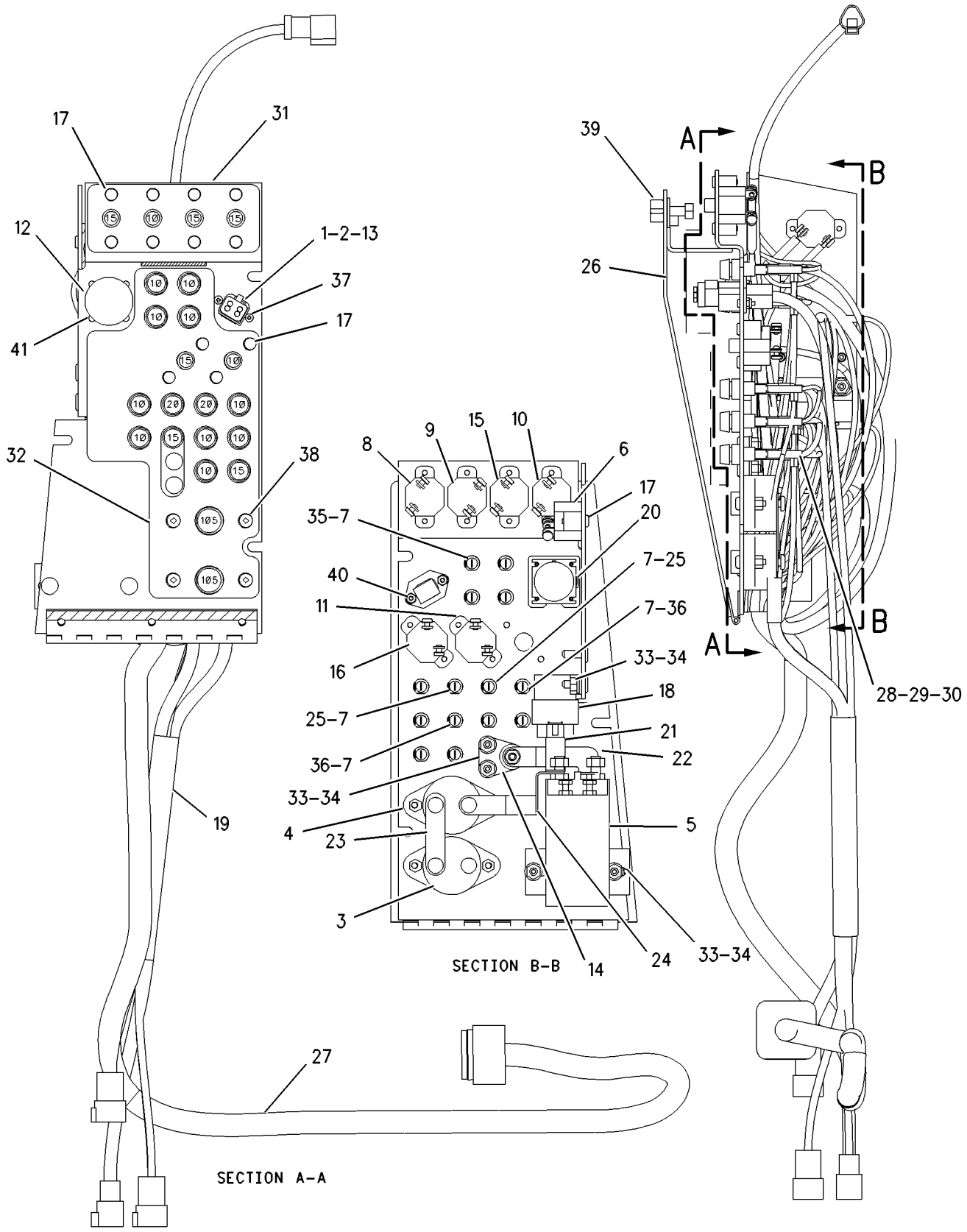

GRAPHIC #1 g00586894

MEMORANDA

ELECTRICAL AND STARTING SYSTEM

145-5150 WIRING GP-CONSOLE

S/N: 3KR1184-UP

PART OF 109-5750 WIRING GP-PLATFORM

SMCS-1408 **i01335697**

NOTE	REF NO	GRAPHIC REF	PART NUMBER	QTY	PART NAME 1 2 3 4 5 6 (PRODUCT LEVEL)	SEE PAGE
	1	1	**102-8809**	1	KIT-CONNECTING PLUG (4 PIN)	
					(INCLUDES PLUG AS & WEDGE)	
	2	1	**3E-3374**	1	WEDGE-PLUG LOCK	
	3	1	**3E-7294**	1	CIRCUIT BREAKER AS (105 AMP) (MAIN)	
	4	1	**3E-7294**	1	CIRCUIT BREAKER AS (105 AMP) (ALTERNATOR)	
					(EACH CIRCUIT BREAKER AS INCLUDES)	
		1	**1H-3244**	2	LOCKWASHER (NO.14)	
		1	**6V-8365**	2	SCREW-MACHINE (1/4-28X.5IN)	
C	5	1	**165-4026**	1	SWITCH AS-MAGNETIC (MAIN RELAY)	
		1	**4F-2294**	2	NUT-JAM (5/16-24 THD)	
		1	**6V-8186**	2	NUT-FULL (5/16-24 THD)	
		1	**6V-8378**	2	NUT (10-32 THD)	
	6	1	**3T-2662**	1	CIRCUIT BREAKER AS (15 AMP) (HEADLIGHT)	
		1	**6V-8376**	2	SCREW-MACHINE (8-32X.25 IN)	
		1	**9B-7233**	2	LOCKWASHER (NO.8)	
	7	1	**4K-5122**	14	HOLDER AS-FUSE	
					(EACH INCLUDES)	
		1	**6T-8115**	1	NUT (1/2-24 THD)	
		1	**139-0178**	1	CAP-FUSE HOLDER	
	8	1	**6N-8589**	1	CIRCUIT BREAKER AS (15 AMP)	
					(DOZER BLADE & RIPPER)	
	9	1	**6N-8589**	1	CIRCUIT BREAKER AS (15 AMP) (ENGINE)	
	10	1	**6N-8589**	1	CIRCUIT BREAKER AS (15 AMP) (POWER OUTLET)	
	11	1	**6N-8589**	1	CIRCUIT BREAKER AS (15 AMP) (FAN MOTOR)	
					(EACH CIRCUIT BREAKER AS INCLUDES)	
		1	**6V-8376**	2	SCREW-MACHINE (8-32X.25 IN)	
		1	**9B-7233**	2	LOCKWASHER (NO.8)	
	12	1	**8C-6354**	1	CAP-RECEPTACLE	
	13	1	**8T-8737**	4	PLUG-SEAL	
	14	1	**9G-8451**	1	BLOCK AS	
		1	**1H-3244**	1	LOCKWASHER (NO.14)	
		1	**4B-4276**	2	WASHER (1.6MM THK)	
		1	**4L-7124**	1	BOLT (1/4-20X1.25IN)	
		1	**6V-8185**	2	NUT (1/4-20 THD)	
	15	1	**9G-9487**	1	CIRCUIT BREAKER AS (10 AMP) (ENGINE START)	
	16	1	**9G-9487**	1	CIRCUIT BREAKER AS (10 AMP)	
					(ELECTRONIC CLUTCH/BRAKE CONTROL LEVER)	
					(EACH CIRCUIT BREAKER AS INCLUDES)	
		1	**6V-8376**	2	SCREW-MACHINE (8-32X.25 IN)	
		1	**9B-7233**	2	LOCKWASHER (NO.8)	
	17	1	**068-4209**	14	SCREW (8-32X0.75IN)	
	18	1	**125-1302**	1	SWITCH GP-MAGNETIC	
					(START RELAY)	
	19	1	**128-1023**	1	HARNESS AS-POWER	
	20	1	**128-6157**	1	PLATE	
	21	1	**128-8401**	1	STRAP	
	22	1	**128-8402**	1	STRAP	
	23	1	**128-8403**	1	STRAP	
	24	1	**151-8071**	1	STRAP	
	25	1	**8M-0456**	2	FUSE (20 AMP)	
	26	1	**141-8770**	1	PLATE AS	
		1	**2V-2045**	8	STUD-WELD	
		1	**127-2419**	1	HINGE	
		1	**127-2420**	1	DOOR	
	27	1	**141-9484**	1	HARNESS AS	
	28	1	**141-9873**	1	WIRE AS	

145-5150 WIRING GP-CONSOLE *(contd.)*

i01335697

NOTE	REF NO	GRAPHIC REF	PART NUMBER	QTY	PART NAME 1 2 3 4 5 6 (PRODUCT LEVEL)	SEE PAGE
	29	1	**141-9874**	1	WIRE AS	
	30	1	**141-9875**	1	WIRE AS	
	31	1	**142-2766**	1	FILM-FUSE	
	32	1	**142-2768**	1	FILM-FUSE	
	33	1	**6V-8185**	6	NUT (1/4-20 THD)	
	34	1	**8T-4205**	6	WASHER-HARD (2MM THK)	
	35	1	**3K-8782**	10	FUSE (10 AMP)	
	36	1	**8M-8948**	2	FUSE (15 AMP)	
	37	1	**9X-6258**	2	SCREW-MACHINE (6-32X.50IN)	
C	38	1	**6V-5645**	2	SCREW-MACHINE (10-32X.8 7 IN)	
	39	1	**6V-7631**	1	LATCH-PAWL	
	40	1	**7D-6922**	2	LOCKNUT (6-32 THD)	
	41	1	**3S-9557**	4	SCREW-PAN HEAD	
C	42	1	**4L-1250**	2	NUT (10 X 32 THD)	
C	43	1	**130-7769**	2	SCREW	
C	44	1	**163-4719**	1	BRACKET	

C-CHANGE FROM PREVIOUS TYPE

145-5150 **WIRING GP-CONSOLE** *(contd.)* **i01335697**

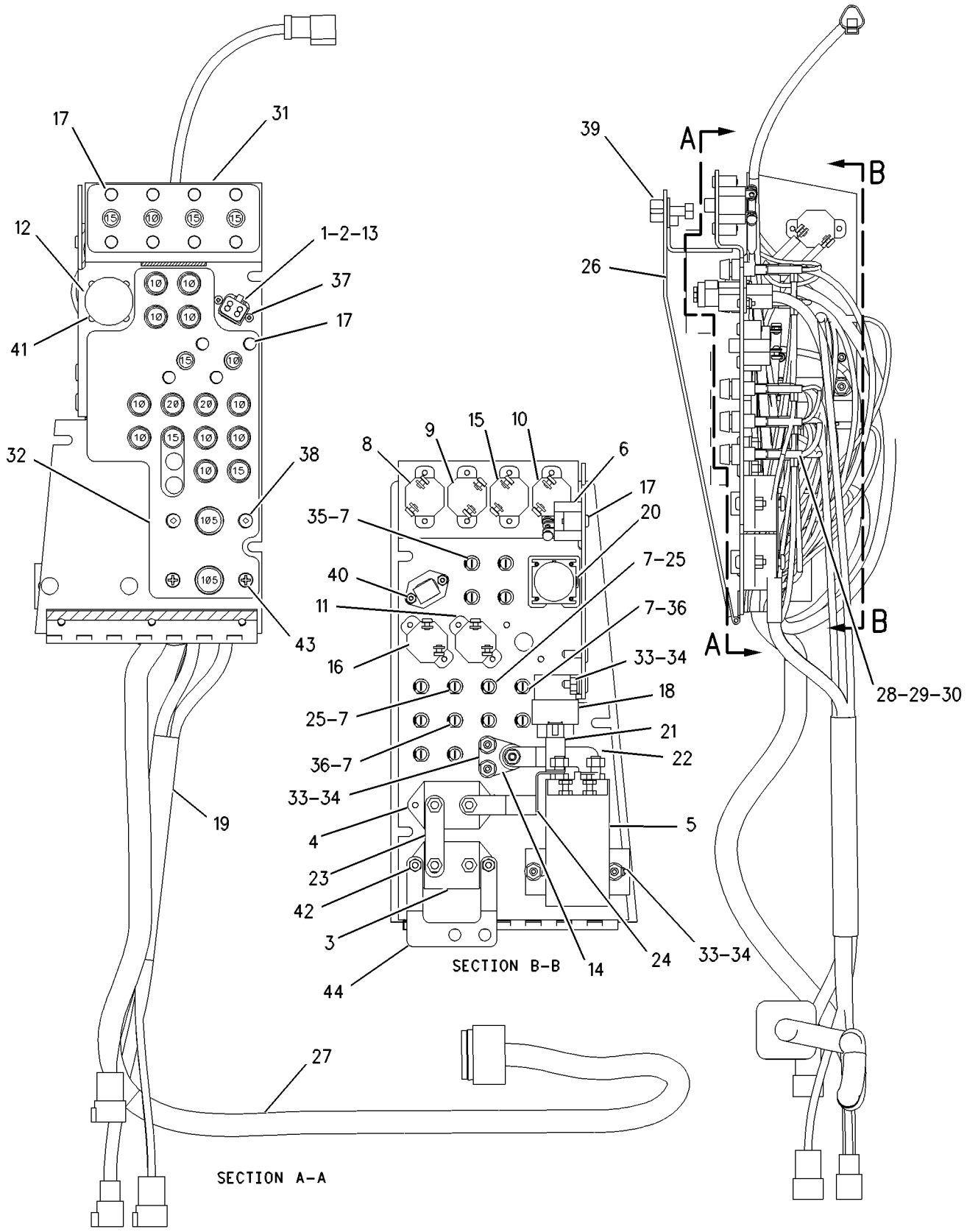

GRAPHIC #1 g00586939

MEMORANDA

ELECTRICAL AND STARTING SYSTEM

120-9750 WIRING GP-ENGINE

S/N: 80M1-UP

PART OF 115-7641, 135-7810, 155-0058 ENGINE AR

ALSO AN ATTACHMENT

SMCS-1403, 1408 **i01742503**

NOTE	REF NO	GRAPHIC REF	PART NUMBER	QTY	PART NAME 1 2 3 4 5 6 (PRODUCT LEVEL)	SEE PAGE
	1	1	**111-3247**	1	HARNESS AS-ENGINE	
	2	1	**110-8213**	1	BRACKET AS	
		1	**4M-0200**	1	STUD-WELD	
	3	1	**9X-6258**	4	SCREW-MACHINE (6-32X.50 IN)	
	4	1	**4B-5324**	4	WASHER (3.9X9.6X1.2MM THK)	
	5	1	**4P-7581**	8	CLIP	
	6	1	**3S-2093**	20	STRAP-CABLE	
	7	1	**0S-1588**	1	BOLT (3/8-16X1.25 IN)	
	8	1	**4P-8134**	4	CLIP	
	9	1	**0S-1594**	1	BOLT (3/8-16X1 IN)	
	10	1	**5M-2894**	2	WASHER-HARD (10.2X18.5X2.5MM THK)	
	11	1	**6V-8801**	2	NUT (3/8-16 THD)	
	12	1	**8T-4896**	3	WASHER-HARD (10.2X18.5X2.5MM THK)	
	13	1	**4D-7388**	1	CLIP	
	14	1	**0S-1620**	1	BOLT (1/2-13X0.75 IN)	
	15	1	**5P-8245**	1	WASHER-HARD (13.5X25.5X3MM THK)	
	16	1	**8M-2772**	1	CLIP	
	17	1	**4P-7429**	1	CLIP	
	18	1	**121-0596**	1	WIRE AS	
	19	1	**130-5300**	1	CLIP	

120-9750 **WIRING GP-ENGINE** *(contd.)* **i01742503**

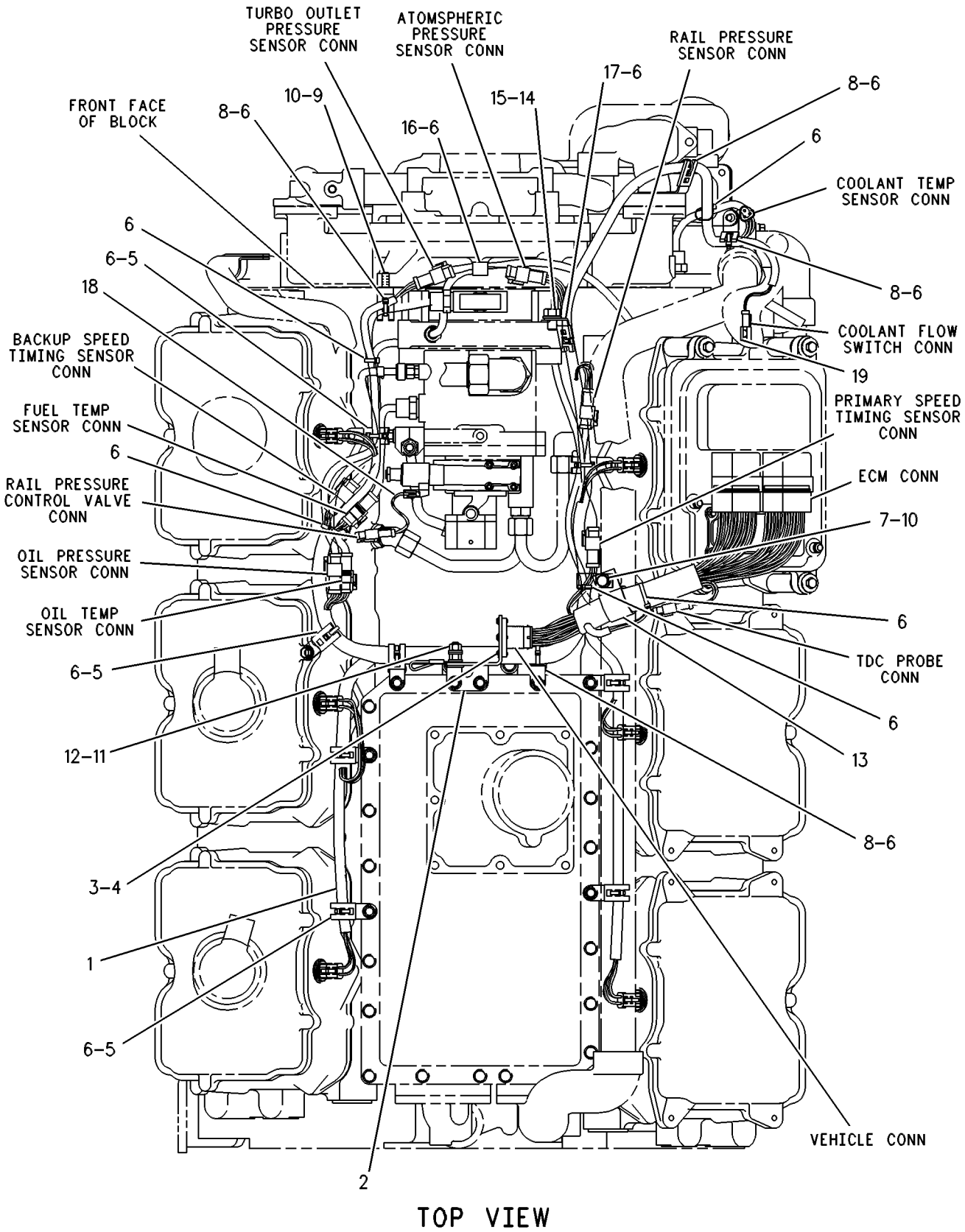

GRAPHIC #1 g00257357

ELECTRICAL AND STARTING SYSTEM

109-5750 WIRING GP-PLATFORM

S/N: 3KR939-UP

SMCS-1408 **i01742506**

NOTE	REF NO	GRAPHIC REF	PART NUMBER	QTY	PART NAME 1 2 3 4 5 6 (PRODUCT LEVEL)	SEE PAGE
Y	1	2	**3E-6328**	1	ALARM GP	315
	2	2	**3T-2357**	1	SWITCH GP (HORN)	
		2	**9X-0199**	1	BOOT-SWITCH	
		2	**6V-8363**	2	SCREW (10-32X0.312 IN)	
		2	**8F-1434**	2	LOCKWASHER	
		2	**7T-9515**	1	KNOB-HORN	
		2	**5L-7200**	1	SCREW (8-32X0.375 IN)	
		2	**3B-4501**	1	LOCKWASHER	
		2	**6V-8370**	1	NUT-HEX (3/4-32 THD)	
		2	**2H-3922**	1	LOCKWASHER	
	3	1	**6T-3990**	1	SWITCH AS-ROCKER (AUXILIARY)	
		1	**3L-8187**	2	LOCKWASHER	
		1	**6V-8374**	2	SCREW-MACHINE (6-32X0.25 IN)	
	4	1	**6T-5814**	1	SWITCH AS (REAR LIGHT)	
		1	**3L-8187**	4	LOCKWASHER	
		1	**6V-8374**	4	SCREW-MACHINE (6-32X0.25 IN)	
	5	1	**6T-6066**	1	SWITCH GP-ROCKER (START AID)	
		1	**6V-8374**	2	SCREW-MACHINE (6-32X0.25 IN)	
		1	**3L-8187**	2	LOCKWASHER	
	6	1	**6V-8927**	12	BOLT-SOCKET HEAD (6-32X0.5 IN)	
	7	2	**7G-7919**	1	PLUG-SEAL	
	8	1	**7N-5876**	4	LAMP (24 VOLT)	
Y	9	1	**9G-7641**	1	SWITCH GP-START (IGNITION)	503
	10	2	**9X-6772**	12	STRAP-CABLE	
	11	2	**102-9235**	1	SOCKET AS-POWER (24 VOLT OUTLET)	
		2	**8T-8729**	2	PIN-CONNECTOR	
J		2	**3E-3365**	1	WEDGE-RECEPTACLE LOCK (2 PIN)	
		2	**102-8802**	1	KIT-RECEPTACLE (2 PIN)	
					(INCLUDES RECEPTACLE & PART MARKED J)	
Y	12	1	**103-5526**	1	CONTROL GP-MONITOR SYS DIMMER	1269
	13	1	**109-5747**	1	HARNESS AS (PLATFORM)	
	14	2	**109-5748**	1	HARNESS AS-RH (CONSOLE)	
	15	1	**118-6365**	1	PLATE AS	
		1	**6V-6716**	2	RIVET-TRUSS HEAD	
		1	**109-1645**	1	CLIP	
	16	2	**122-2738**	1	RETAINER	
	17	2	**125-4490**	1	CLIP	
	18	1	**126-4885**	1	HARNESS AS	
	19	2	**130-0106**	1	PLUG AS	
		2	**102-8811**	1	KIT-CONNECTING PLUG (8 PIN)	
					(INCLUDES PLUG AS AND WEDGE)	
		2	**8T-8737**	5	PLUG-SEAL	
		2	**8T-8730**	3	SOCKET-CONNECTOR	
		2	**3E-3386**	1	WEDGE-PLUG LOCK	
	20	2	**136-3315**	1	SEAL	
Y	21	1	*145-5150*	1	WIRING GP-CONSOLE	512
	22	2	**127-5486**	1	RECEPTACLE AS (1 PIN)	
	23	2	**2G-1133**	1	GROMMET	
	24	2	**105-9149**	1	SWITCH AS (24 VOLT)(ILLUMINATED) (THROTTLE)	
		2	**6V-1748**	1	ACTUATOR-ROCKER	
		2	**3E-8825**	2	LAMP (24 VOLT)	
	25	2	**3P-3839**	1	GROMMET	
	26	1	**4M-5281**	3	BOLT (1/4-20X.750 IN)	
	27	2	**4P-8134**	1	CLIP	
	28	1	**5F-9757**	1	GROMMET	
	29	1,2	**5M-3062**	5	BOLT (3/8-16X0.75 IN)	
	30	2	**5P-1075**	2	WASHER-HARD (10.2X22.5X3MM THK)	

109-5750 WIRING GP-PLATFORM *(contd.)* i01742506

NOTE	REF NO	GRAPHIC REF	PART NUMBER	QTY	PART NAME 1 2 3 4 5 6 (PRODUCT LEVEL)	SEE PAGE
	31	2	**5P-6264**	1	GROMMET	
	32	2	**5S-7349**	2	BOLT (1/4-20X0.5 IN)	
	33	2	**6P-6641**	1	GROMMET	
	34	1	**6V-8801**	1	NUT (3/8-16 THD)	
	35	1,2	**8T-4205**	7	WASHER-HARD (7.2X14.5X2MM THK)	
	36	1,2	**8T-4896**	4	WASHER-HARD (10.2X18.5X2.5MM THK)	
	37	1	**8T-9367**	2	BOLT (1/4-20X2 IN)	
D	38	2	*5P-5901*		SEAL (.2M)	
	39	1	**6T-3990**	1	SWITCH AS-ROCKER (SIDE LIGHT)	
		1	**6V-8374**	2	SCREW-MACHINE (6-32X0.25 IN)	
		1	**3L-8187**	2	LOCKWASHER	
	40	1	**6T-5814**	1	SWITCH AS (FRONT LIGHT)	
		1	**6V-8374**	4	SCREW-MACHINE (6-32X0.25 IN)	
		1	**3L-8187**	4	LOCKWASHER	
	41	1	**6T-6066**	1	SWITCH GP-ROCKER (OPERATOR)	
		1	**6V-8374**	2	SCREW-MACHINE (6-32X0.25 IN)	
		1	**3L-8187**	2	LOCKWASHER	

D-ORDER BY THE METER
J-INCLUDED IN 1028802 RECEPTACLE KIT
Y-SEPARATE ILLUSTRATION

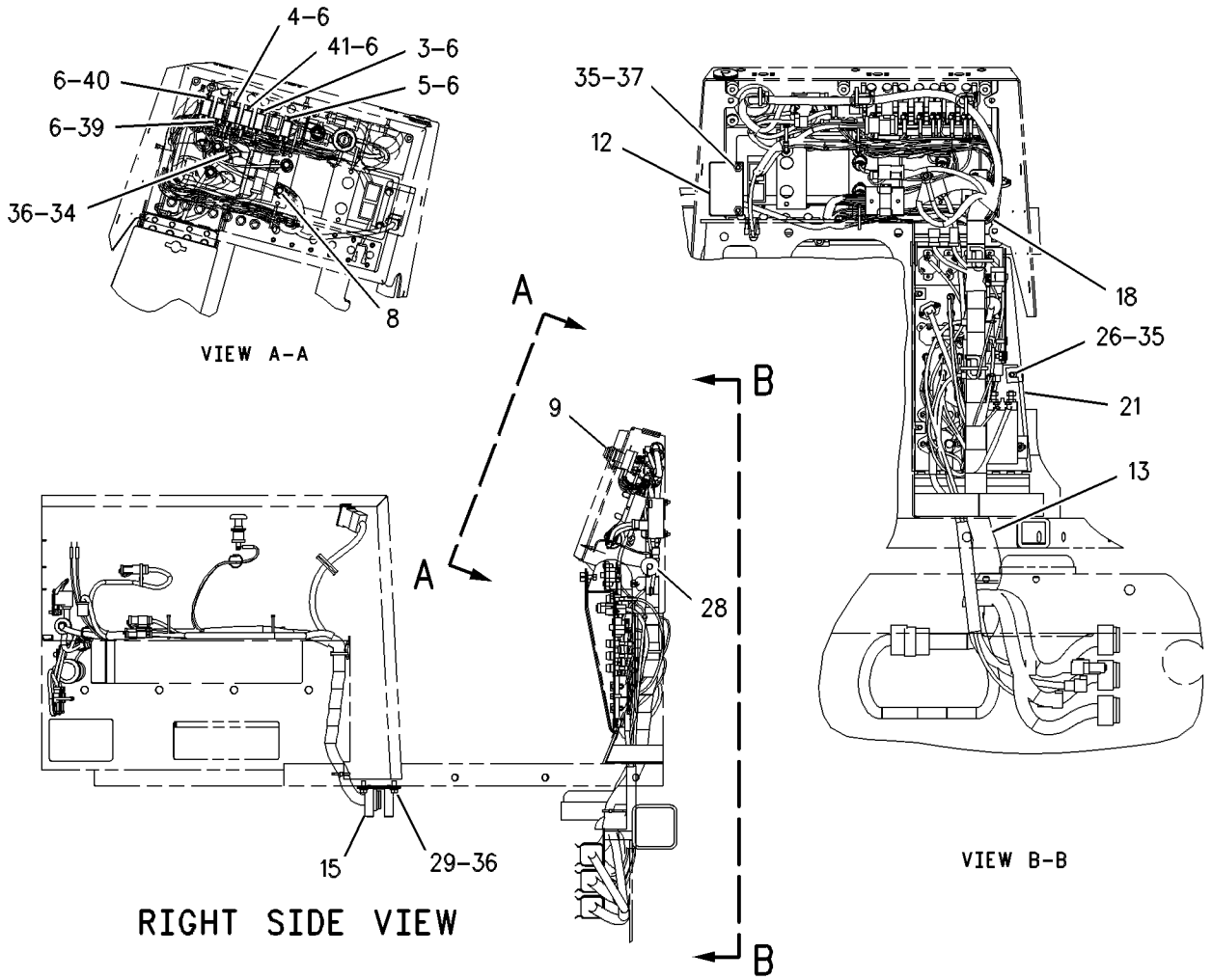

GRAPHIC #1 g00545519

109-5750 **WIRING GP-PLATFORM** *(contd.)* **i01742506**

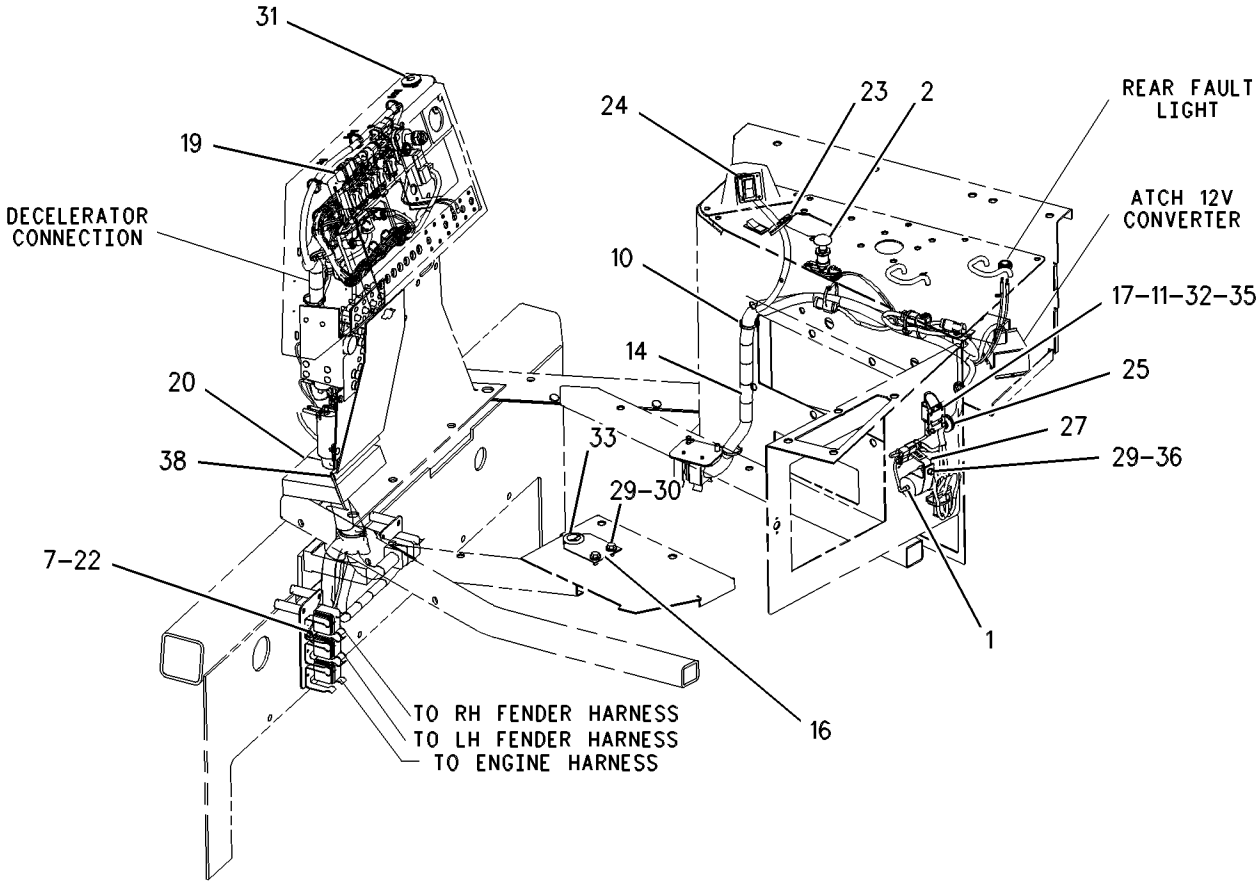

GRAPHIC #2 g00545572

MEMORANDA

ELECTRICAL AND STARTING SYSTEM

114-6664 WIRING GP-PLATFORM

S/N: 3KR1-UP

SMCS-1408 **i01742547**

NOTE	REF NO	GRAPHIC REF	PART NUMBER	QTY	PART NAME 1 2 3 4 5 6 (PRODUCT LEVEL)	SEE PAGE
	1	1	**6V-8927**	12	BOLT-SOCKET HEAD (6-32X0.5 IN)	
	2	1	**130-0106**	1	PLUG AS	
Y	3	1	**9G-7641**	1	SWITCH GP-START (HORN)	503
	4	1	**5P-6264**	1	GROMMET	
	5	1	**4P-7581**	4	CLIP	
	6	1	**8T-9367**	2	BOLT (1/4-20X2 IN)	
	7	1	**8T-4205**	5	WASHER-HARD (7.2X14.5X2MM THK)	
Y	8	1	**103-5526**	1	CONTROL GP-MONITOR SYS DIMMER	1269
Y	9	1	**3E-6328**	1	ALARM GP	315
	10	1	**5M-3062**	1	BOLT (3/8-16X0.75 IN)	
	11	1	**8T-4896**	2	WASHER-HARD (10.2X18.5X2.5MM THK)	
	12	1	**126-4886**	1	HARNESS AS (PLATFORM)	
Y	13	1	*127-2423*	1	WIRING GP-CONSOLE	506
	14	1	**4M-5281**	3	BOLT (1/4-20X.750 IN)	
	15	1	**126-4885**	1	HARNESS AS (DASH)	
	16	1	**136-3315**	1	SEAL	
	17	1	**7N-5876**	4	LAMP (24 VOLT)	
B	18	1	**9X-6772**	15	STRAP-CABLE (1.97IN MAX DIA)	
FJ		1	**131-3916**	1	PLUG AS	
	19	1	**5F-9757**	1	GROMMET	
BD	20	1	**5P-5901**		SEAL	
	21	1	**6V-8801**	1	NUT (3/8-16 THD)	
B	22	1	**1S-9593**	5	STRAP-CABLE	
B	23	1	**7K-1181**	5	STRAP-CABLE	
B	24	2	**7K-1181**	5	STRAP-CABLE	
	25	2	**102-9235**	1	SOCKET AS-POWER (24 VOLT OUTLET)	
		2	**102-8802**	1	KIT-RECEPTACLE (2 PIN)	
					(INCLUDES WEDGE & RECEPTACLE AS)	
		2	**3E-3365**	1	WEDGE-RECEPTACLE LOCK (2 PIN)	
		2	**8T-8729**	2	PIN-CONNECTOR	
B	26	2	**9X-6772**	15	STRAP-CABLE (1.97IN MAX DIA)	
	27	2	**105-9149**	1	SWITCH AS (24 VOLT)(ILLUMINATED) (THROTTLE)	
		2	**6V-1748**	1	ACTUATOR-ROCKER	
		2	**3E-8825**	2	LAMP (24 VOLT)	
B	28	2	**1S-9593**	5	STRAP-CABLE	
	29	2	**103-4722**	1	HARNESS AS (RH CONSOLE)	
	30	2	**8T-4896**	2	WASHER-HARD (10.2X18.5X2.5MM THK)	
	31	2	**118-6365**	1	PLATE AS	
		2	**6C-3680**	2	RIVET-POP	
		2	**109-1645**	1	CLIP	
	32	2	**3P-3839**	1	GROMMET	
	33	2	**125-4490**	1	CLIP	
	34	2	**5S-7349**	2	BOLT (1/4-20X0.5 IN)	
		2	**8T-4205**	2	WASHER-HARD (7.2X14.5X2MM THK)	
	35	2	**6T-6066**	1	SWITCH GP-ROCKER (START AID)	
		2	**3L-8187**	2	LOCKWASHER (3.7MM ID)	
		2	**6V-8374**	2	SCREW-MACHINE (6-32X0.25 IN)	
	36	2	**6T-3990**	1	SWITCH AS-ROCKER (AUXILIARY)	
		2	**3L-8187**	2	LOCKWASHER (3.7MM ID)	
		2	**6V-8374**	2	SCREW-MACHINE (6-32X0.25 IN)	
	37	2	**6T-5814**	1	SWITCH AS (REAR LIGHT)	
		2	**3L-8187**	4	LOCKWASHER (ID)	
		2	**6V-8374**	4	SCREW-MACHINE (6-32X0.25 IN)	
	38	2	**6T-3990**	1	SWITCH AS-ROCKER (SIDE LIGHT)	
		2	**3L-8187**	2	LOCKWASHER	
		2	**6V-8374**	2	SCREW-MACHINE (6-32X0.25 IN)	
	39	2	**6T-6066**	1	SWITCH GP-ROCKER (OPERATOR)	

114-6664 WIRING GP-PLATFORM *(contd.)*

i01742547

NOTE	REF NO	GRAPHIC REF	PART NUMBER	QTY	PART NAME 1 2 3 4 5 6 (PRODUCT LEVEL)	SEE PAGE
		2	**3L-8187**	2	LOCKWASHER	
		2	**6V-8374**	2	SCREW-MACHINE (6-32X0.25 IN)	
	40	2	**6T-5814**	1	SWITCH AS (FRONT LIGHT)	
		2	**3L-8187**	4	LOCKWASHER	
		2	**6V-8374**	4	SCREW-MACHINE (6-32X0.25 IN)	
	41	2	**122-2738**	1	RETAINER	
	42	2	**6P-6641**	1	GROMMET	
	43	2	**5P-1075**	2	WASHER-HARD (10.2X22.5X3MM THK)	
	44	2	**5M-3062**	4	BOLT (3/8-16X0.75 IN)	
	45	2	**3T-2357**	1	SWITCH GP	
	46	2	**7T-9515**	1	KNOB-HORN	
		2	**3B-4501**	1	LOCKWASHER	
		2	**5L-7200**	1	SCREW (8-32X0.375 IN)	
	47	2	**9X-0199**	1	BOOT-SWITCH	
	48	2	**6V-8370**	1	NUT-HEX (3/4-32 THD)	
		2	**2H-3922**	1	LOCKWASHER	
	49	2	**6V-8363**	2	SCREW (10-32X0.312 IN)	
		2	**8F-1434**	2	LOCKWASHER	

B-USE AS REQUIRED
D-ORDER BY THE METER
F-NOT SHOWN
J-PLUG FOR FINGER TIP
Y-SEPARATE ILLUSTRATION

114-6664 **WIRING GP-PLATFORM** *(contd.)* **i01742547**

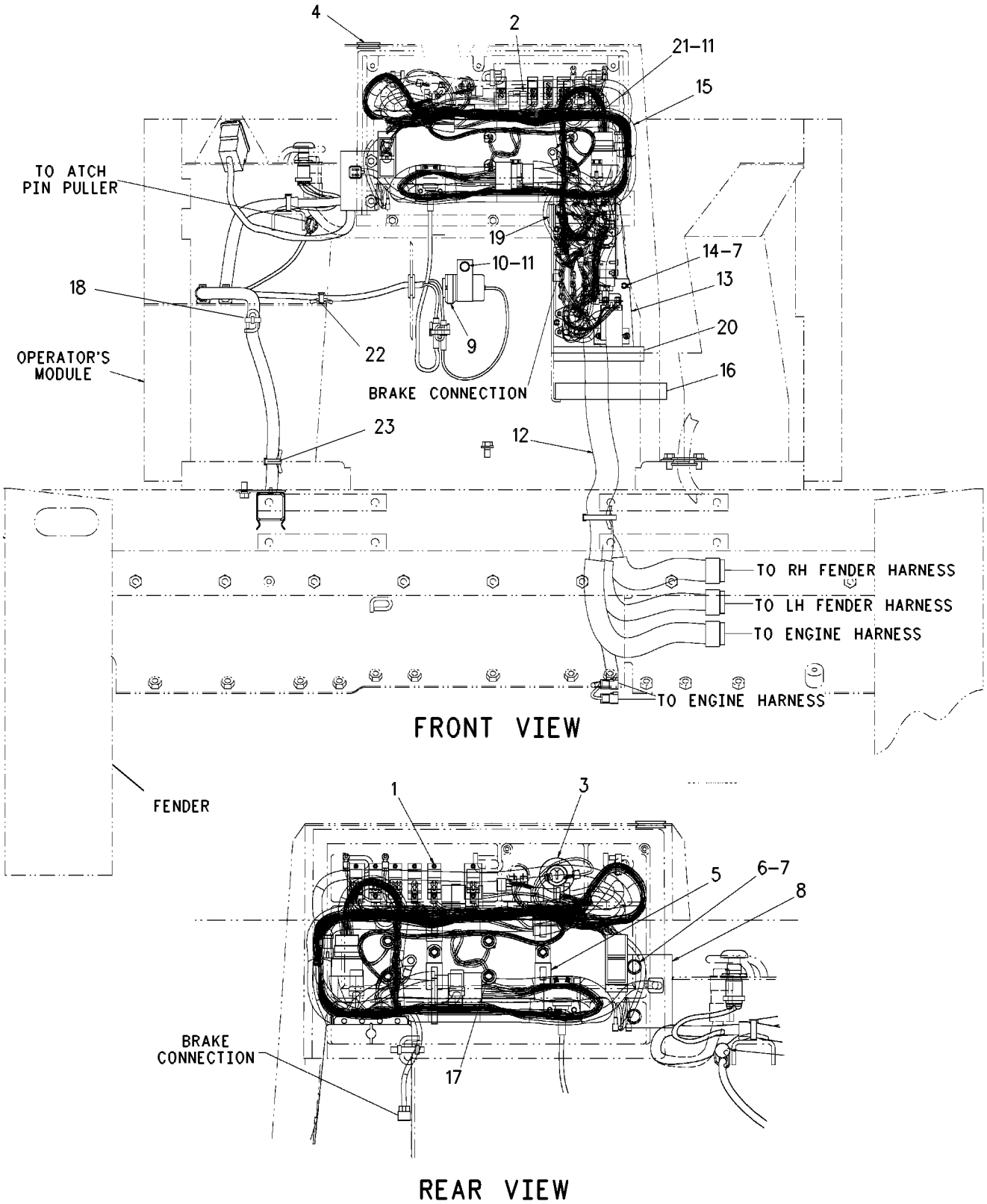

GRAPHIC #1 g00395377

114-6664 **WIRING GP-PLATFORM** *(contd.)* **i01742547**

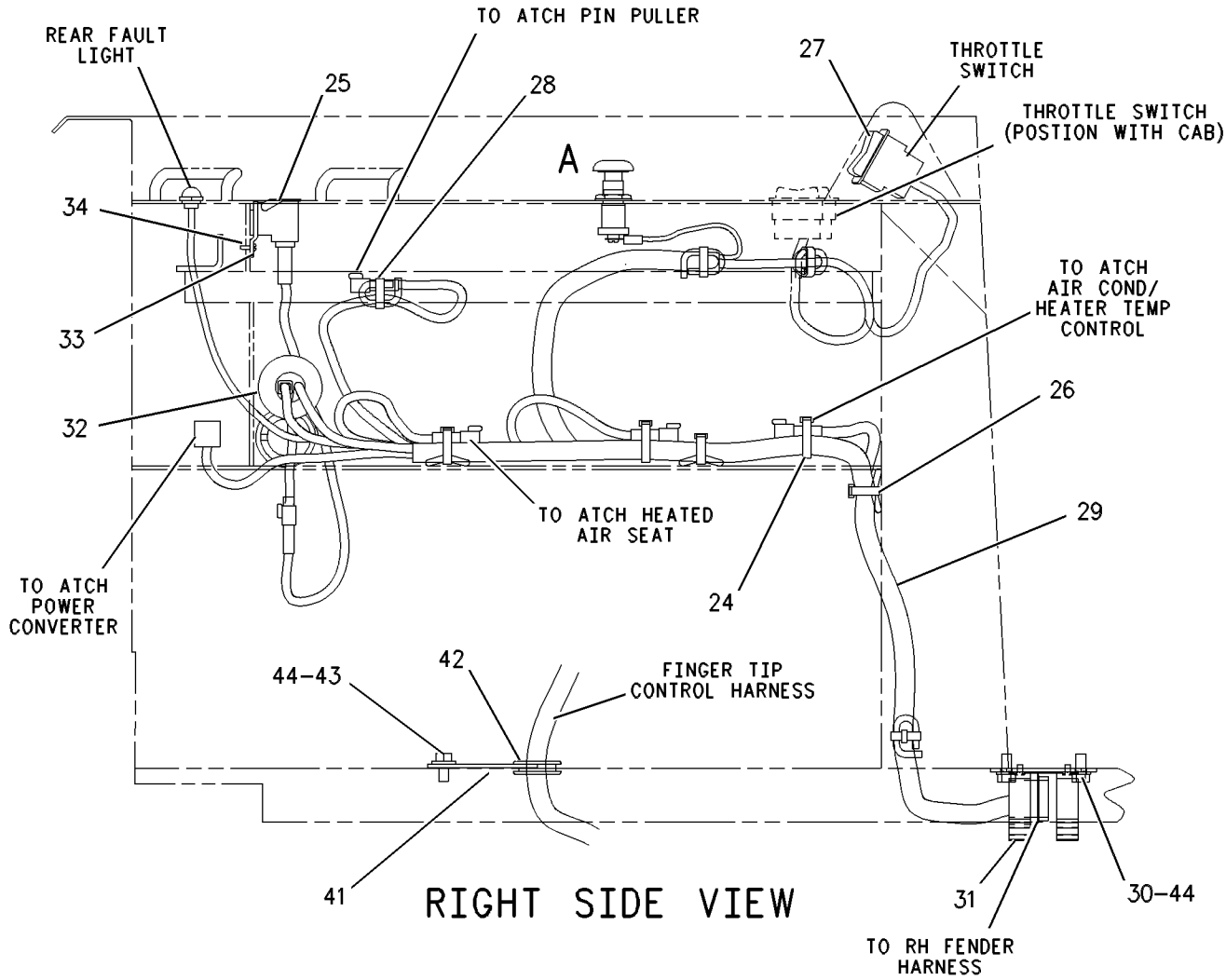

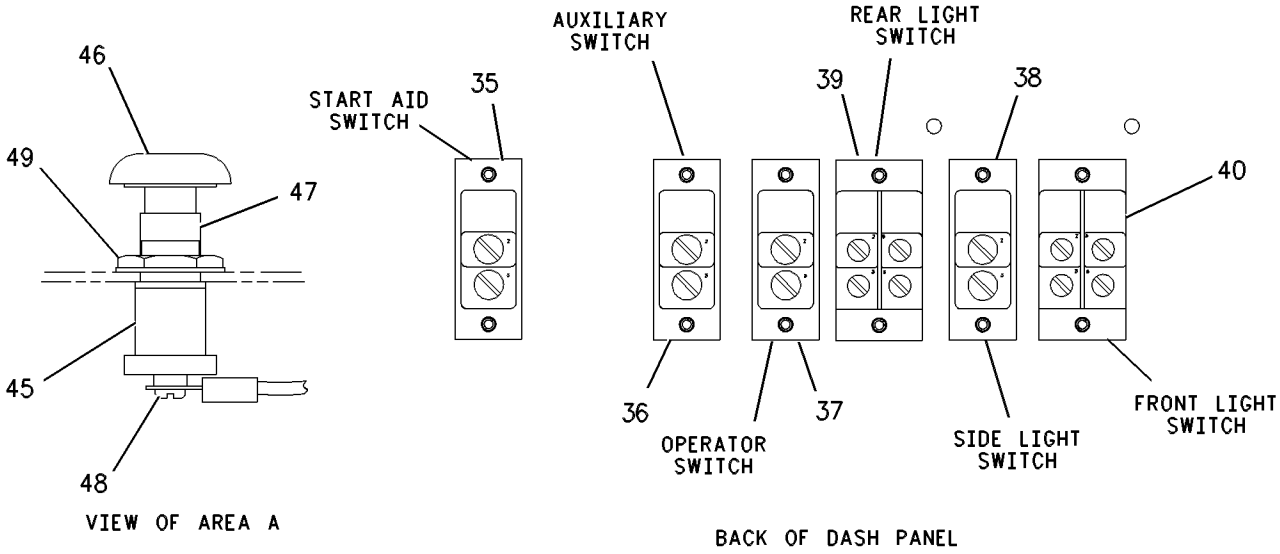

GRAPHIC #2 g00395399

ELECTRICAL AND STARTING SYSTEM

109-0401 WIRING GP-UNIT INJECTOR

S/N: 80M1-UP
PART OF 115-7641, 135-7810, 155-0058 ENGINE AR
ALSO AN ATTACHMENT

SMCS-1290, 1408 **i01612740**

NOTE	REF NO	GRAPHIC REF	PART NUMBER	QTY	PART NAME 1 2 3 4 5 6 (PRODUCT LEVEL)	SEE PAGE
	1	1	**7E-6508**	2	CAP AS (UNIT INJECTOR)	
	2	1	**107-6761**	1	CLIP	
	3	1	**2H-3755**	1	BOLT (5/16-18X0.62 IN)	
	4	1	**9M-1974**	1	WASHER-HARD (8.8X16X2MM THK)	
	5	1	**179-7087**	1	HARNESS AS-ENGINE (UNIT INJECTOR)	
	6	1	**033-6034**	1	SEAL-O-RING	
	7	1	**5L-4019**	1	RING-RETAINING	

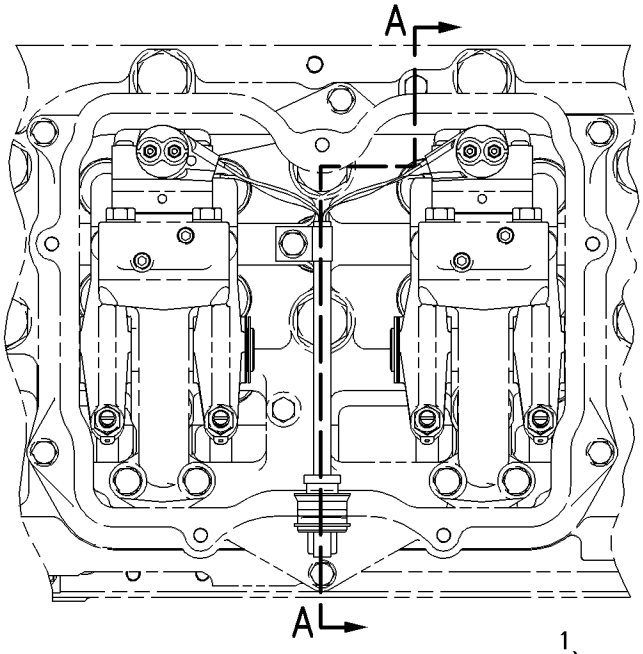

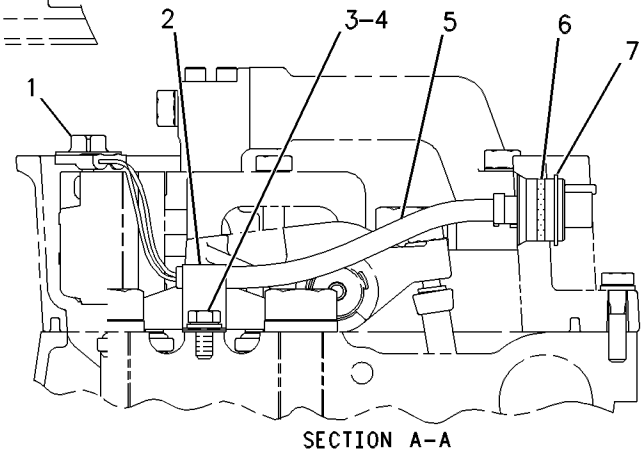

GRAPHIC #1 g00586543

POWER TRAIN

110-2637 AXLE GP-POWER TRAIN

S/N: 3KR1-775, 777, 779

SMCS-3013, 3259, 3278 **i01401275**

NOTE	REF NO	GRAPHIC REF	PART NUMBER	QTY	PART NAME 1 2 3 4 5 6 (PRODUCT LEVEL)	SEE PAGE
	1	1	**126-2857**	2	SHAFT AS	
					(EACH SHAFT AS INCLUDES)	
		1	**8E-0618**	1	BEARING-THRUST	
	2	1	**126-2859**	2	SHAFT AS	
					(EACH SHAFT AS INCLUDES)	
		1	**8E-0618**	1	BEARING-THRUST	
QUANTITIES SHOWN ARE THOSE REQUIRED FOR BOTH LH AND RH SIDES						

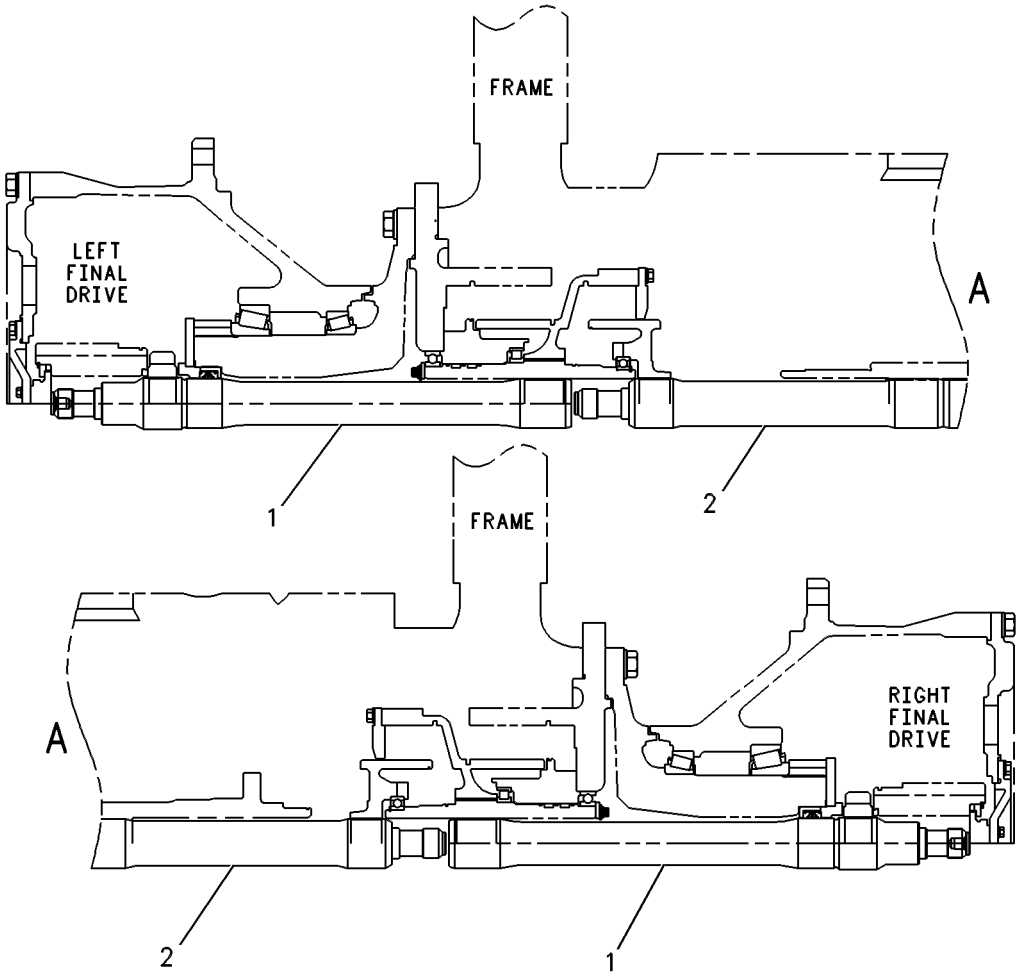

GRAPHIC #1 g00252802

POWER TRAIN

110-2637 AXLE GP-POWER TRAIN

S/N: 3KR776, 778, 780-944, 946-962

SMCS-3013, 3259, 3278 **i01401276**

NOTE	REF NO	GRAPHIC REF	PART NUMBER	QTY	PART NAME 1 2 3 4 5 6 (PRODUCT LEVEL)	SEE PAGE
C	1	1	**149-2888**	2	SHAFT AS	
					(EACH SHAFT AS INCLUDES)	
		1	**149-2408**	1	BEARING-THRUST	
C	2	1	**149-2889**	2	SHAFT AS	
					(EACH SHAFT AS INCLUDES)	
		1	**149-2407**	1	BEARING-THRUST	

QUANTITIES SHOWN ARE THOSE REQUIRED FOR BOTH LH AND RH SIDES
C-CHANGE FROM PREVIOUS TYPE

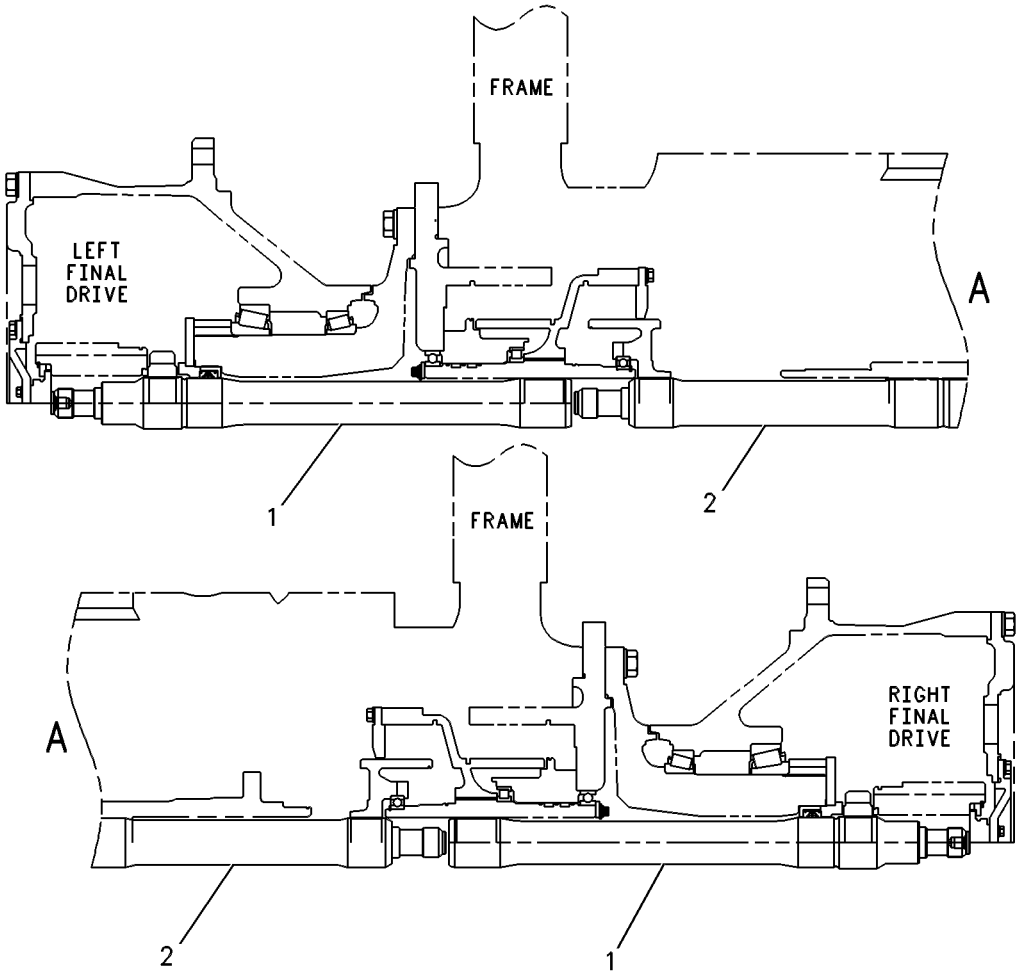

GRAPHIC #1 g00252802

POWER TRAIN

110-2637 AXLE GP-POWER TRAIN

S/N: 3KR945, 963-1065

SMCS-3013, 3259, 3278 **i01401278**

NOTE	REF NO	GRAPHIC REF	PART NUMBER	QTY	PART NAME 1 2 3 4 5 6 (PRODUCT LEVEL)	SEE PAGE
C	1	1	**147-1226**	2	SHAFT AS	
					(EACH SHAFT AS INCLUDES)	
		1	**8E-0618**	1	BEARING-THRUST	
	2	1	**149-2889**	2	SHAFT AS	
					(EACH SHAFT AS INCLUDES)	
		1	**149-2407**	1	BEARING-THRUST	

QUANTITIES SHOWN ARE THOSE REQUIRED FOR BOTH LH AND RH SIDES
C-CHANGE FROM PREVIOUS TYPE

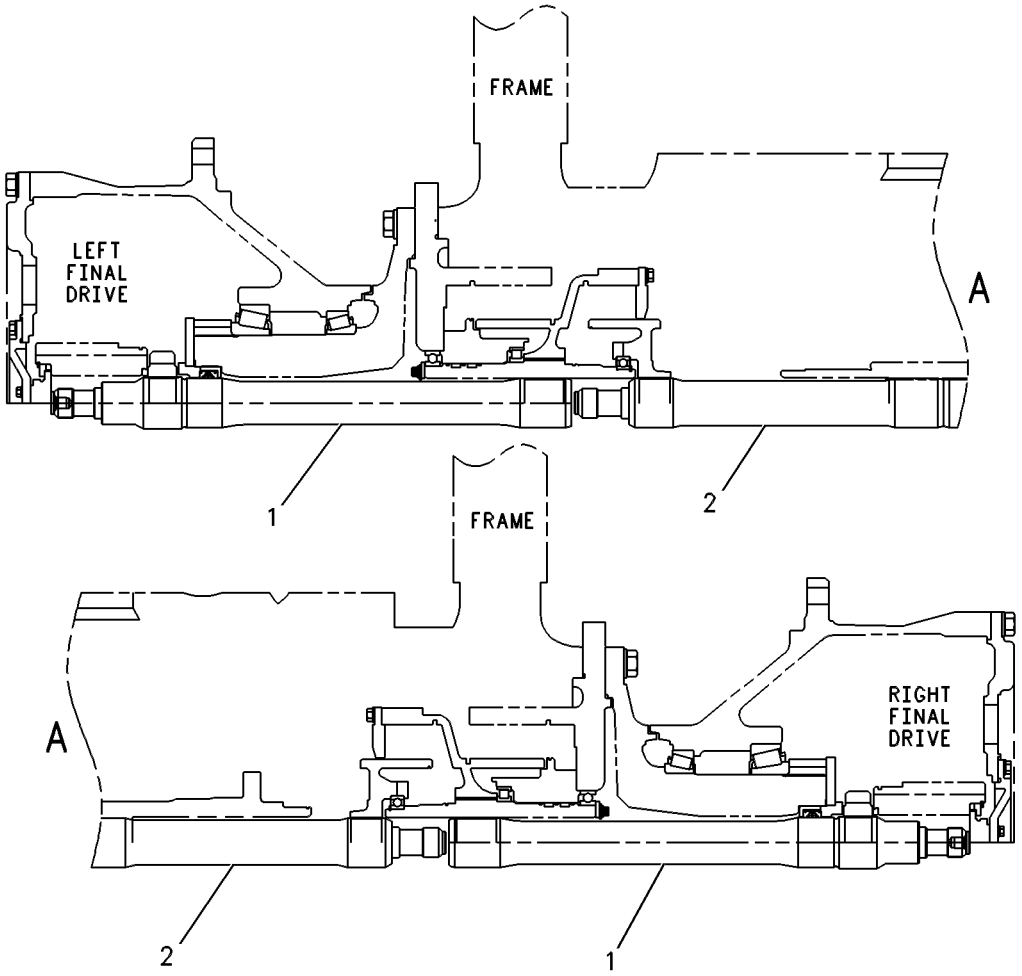

GRAPHIC #1 g00252802

POWER TRAIN

110-2637 AXLE GP-POWER TRAIN

S/N: 3KR1066-UP

SMCS-3013, 3259, 3278 **i01401277**

NOTE	REF NO	GRAPHIC REF	PART NUMBER	QTY	PART NAME 1 2 3 4 5 6 (PRODUCT LEVEL)	SEE PAGE
	1	1	**147-1226**	2	SHAFT AS	
					(EACH SHAFT AS INCLUDES)	
		1	**8E-0618**	1	BEARING-THRUST	
C	2	1	**150-1302**	2	SHAFT AS	
					(EACH SHAFT AS INCLUDES)	
		1	**8E-0618**	1	BEARING-THRUST	

QUANTITIES SHOWN ARE THOSE REQUIRED FOR BOTH LH AND RH SIDES
C-CHANGE FROM PREVIOUS TYPE

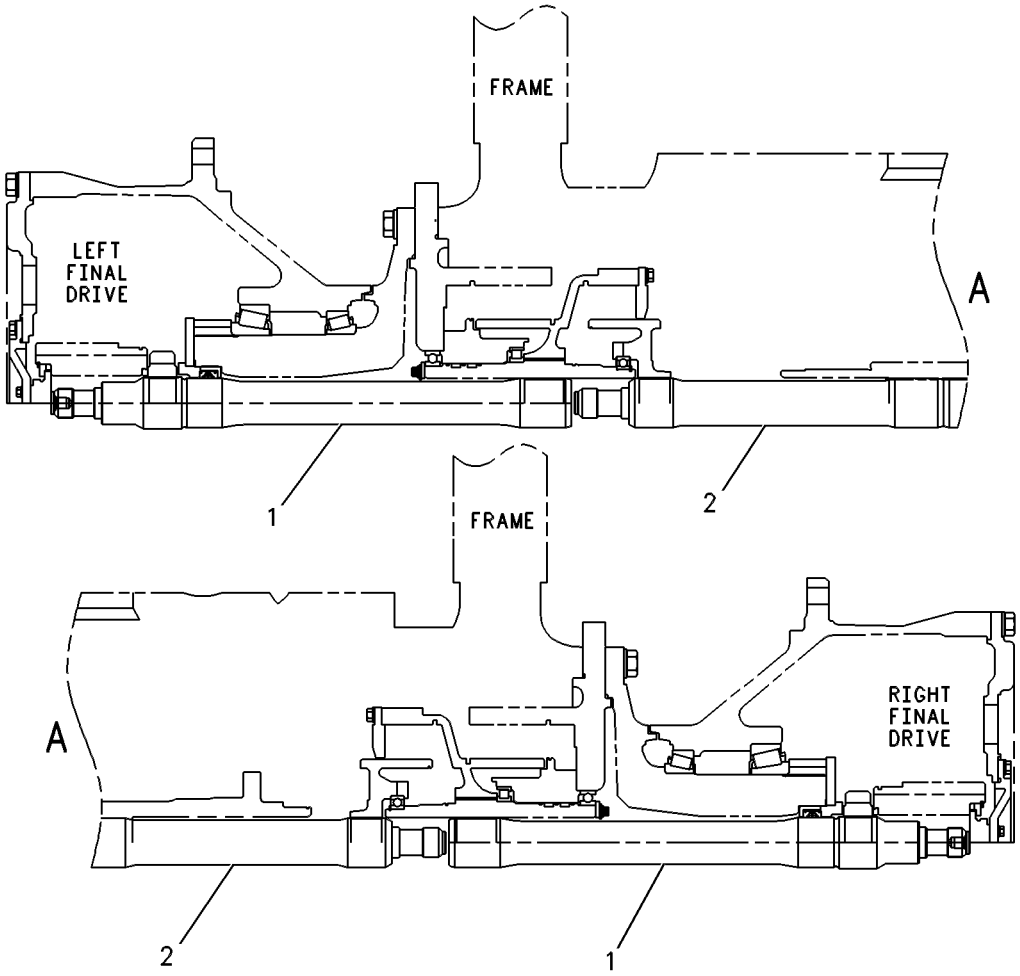

GRAPHIC #1 g00252802

MEMORANDA

POWER TRAIN

110-9293 CASE & PARTS GP-PLANETARY

S/N: 1LY1-UP

PART OF 110-9296 TRANSMISSION AR

SMCS-3064 **i01514489**

NOTE	REF NO	GRAPHIC REF	PART NUMBER	QTY	PART NAME 1 2 3 4 5 6 (PRODUCT LEVEL)	SEE PAGE
	1	1	**110-9291**	1	COVER AS	
		1	**7M-8480**	2	DOWEL	
	2	1	**9M-9647**	3	SEAL-O-RING	
	3	1	**5P-8998**	1	FITTING (1/4-18 NPTF THD)	
	4	1	**110-9298**	1	CASE AS	
		1	**4B-9785**	3	BALL	
		1	**4D-8148**	2	DOWEL	
		1	**114-4655**	1	PLUG-CUP	
	5	1	**5P-9519**	1	SEAL-O-RING	
	6	1	**6L-9284**	1	SEAL-O-RING	
	7	1	**8S-9130**	1	SCREEN-SUCTION	
	8	1	**8T-6762**	1	PLUG-PIPE	
Y	9	1	**106-4150**	1	DRAIN GP-ECOLOGY	548
	10	1	**6L-9965**	1	SEAL-O-RING	
	11	1	**8T-2501**	4	BOLT (3/8-16X2 IN)	
	12	1	**9G-8615**	1	COVER	
	13	1	**8P-0058**	1	GASKET-COVER	
	14	1	**034-3557**	25	BOLT-LOCKING (3/8-16X1.125 IN)	
	15	1	**5K-9107**	2	BOLT-LOCKING (3/8-16X0.75 IN)	
	16	1	**5K-5120**	1	STRIP	
	17	1	**9S-7710**	1	ELBOW-FLARED	
	18	1	**5M-2894**	1	WASHER-HARD (10.2X18.5X2.5MM THK)	
	19	1	**9S-1350**	1	CLIP	
	20	1	**113-8866**	1	COVER AS	
	21	1	**186-3161**	1	GASKET-COVER	
	22	1	**9S-4191**	4	PLUG-STRAIGHT THREAD	
	23	1	**3J-1907**	6	SEAL-O-RING	
	24	1	**9S-6130**	1	PLUG-O-RING	
	25	1	**2S-4078**	3	SEAL-O-RING	
	26	1	**8J-5914**	2	PLUG-O-RING	
	27	1	**6V-0852**	2	CAP-DUST	
	28	1	**6V-3965**	2	FITTING AS (QUICK DISCONNECT)	
	29	1	**110-9299**	1	TUBE AS	
	30	1	**4K-5175**	4	BOLT-12 POINT HEAD (1/2-13X1.5 IN)	
	31	1	**5K-9235**	1	ELBOW-FLARED	
	32	1	**110-9300**	1	TUBE AS	
	33	1	**5K-9989**	1	TEE-FLARED	
	34	1	**8M-5266**	2	SEAL-O-RING	
	35	1	**112-4512**	1	TUBE	
	36	1	**9X-8880**	15	BOLT (5/8-11X2 IN)	
	37	1	**5P-8247**	15	WASHER-HARD (17X32X3.5MM THK)	

Y-SEPARATE ILLUSTRATION

110-9293 **CASE & PARTS GP-PLANETARY** *(contd.)* **i01514489**

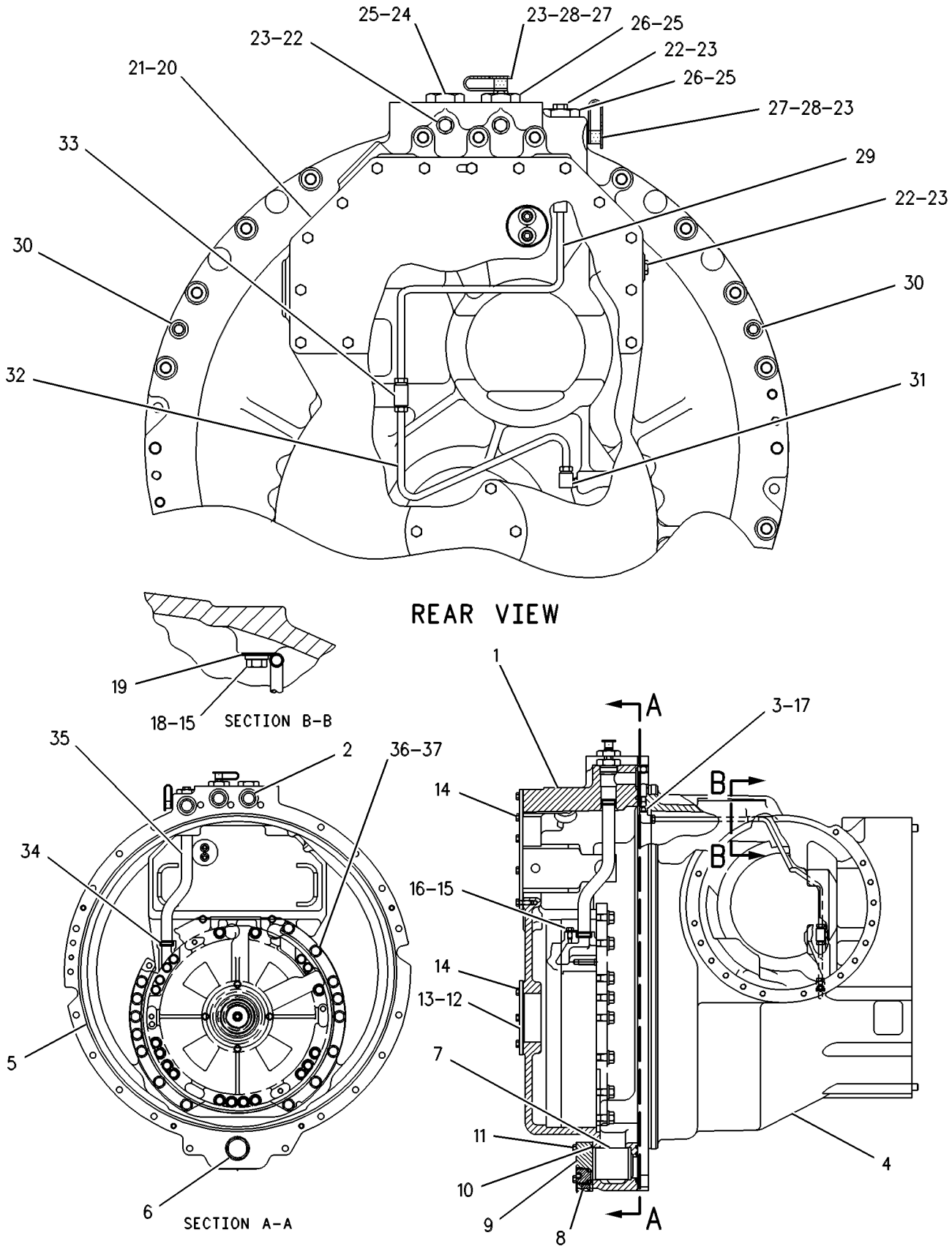

GRAPHIC #1 g00252841

115-7412 CONTROL & MTG GP-TRANSMISSION

S/N: 3KR1-UP
ELECTRONIC

SMCS-3065 **i00945132**

NOTE	REF NO	GRAPHIC REF	PART NUMBER	QTY	PART NAME 1 2 3 4 5 6 (PRODUCT LEVEL)	SEE PAGE
	1	1	**6F-7012**	2	STUD (3/8-16 THD)	
Y	2	1	*124-2356*	1	CONTROL GP-STEERING & TMSN	866
	3	1	**5M-3062**	4	BOLT (3/8-16X.75IN)	
	4	1	**6V-8801**	2	NUT (3/8-16 THD)	
	5	1	**8T-4896**	4	WASHER-HARD (2.5MM THK)	

Y-SEPARATE ILLUSTRATION

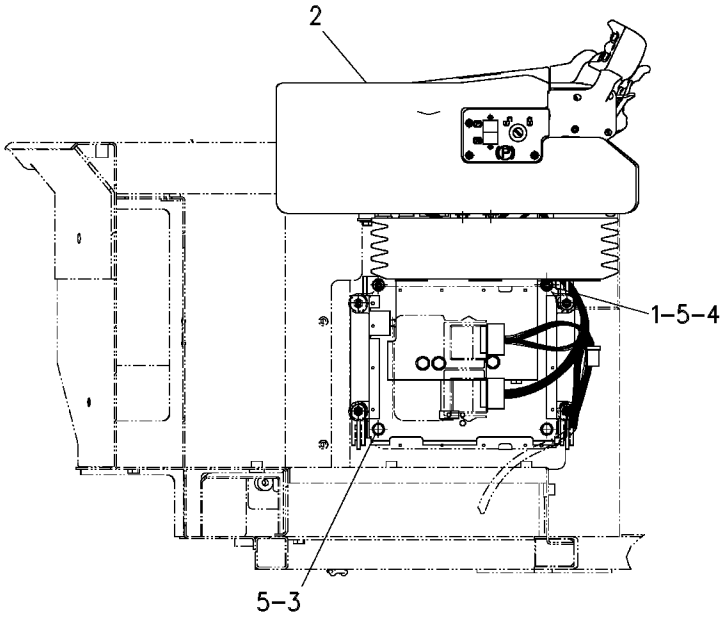

RIGHT SIDE VIEW

GRAPHIC #1 g00272760

MEMORANDA

POWER TRAIN

113-8276 CONTROL GP-TRANSMISSION HYD

S/N: 1LY1-1344

PART OF 110-9296 TRANSMISSION AR

SMCS-3073 **i01742553**

NOTE	REF NO	GRAPHIC REF	PART NUMBER	QTY	PART NAME 1 2 3 4 5 6 (PRODUCT LEVEL)	SEE PAGE
Y	1	1	*113-9270*	1	VALVE GP-BANK	1018
	2	1	**8M-4986**	2	SEAL-O-RING	
Y	3	1	**6Y-0771**	1	VALVE GP-PRIORITY	664
	4	1	**3T-4403**	2	SPRING	
	5	1	**8M-4432**	4	SEAL-O-RING	
	6	1	**3T-6457**	2	SLEEVE	
	7	1	**1A-2029**	2	BOLT (3/8-16X1.125 IN)	
	8	1	**104-6729**	1	RETAINER	
	9	1	**104-6730**	1	GASKET	
	10	1	**1D-4539**	4	BOLT (5/16-18X2.5 IN)	
	11	1	**9M-1974**	4	WASHER-HARD (8.8X16X2MM THK)	
	12	1	**6Y-0775**	1	SLEEVE	
	13	1	**3J-1907**	2	SEAL-O-RING	
	14	1	**9S-4191**	2	PLUG	
	15	1	**6V-4365**	4	SEAL-O-RING	
	16	1	**6Y-0774**	1	SLEEVE	
	17	1	**6B-1557**	4	BOLT (3/8-16X7.5 IN)	
	18	1	**5M-2894**	4	WASHER-HARD (10.2X18.5X2.5MM THK)	
	19	1	**6J-2419**	1	SEAL-O-RING	
		1	**125-5341**	1	NUT (1-1/4-18 THD)	

Y-SEPARATE ILLUSTRATION

113-8276 **CONTROL GP-TRANSMISSION HYD** *(contd.)* **i01742553**

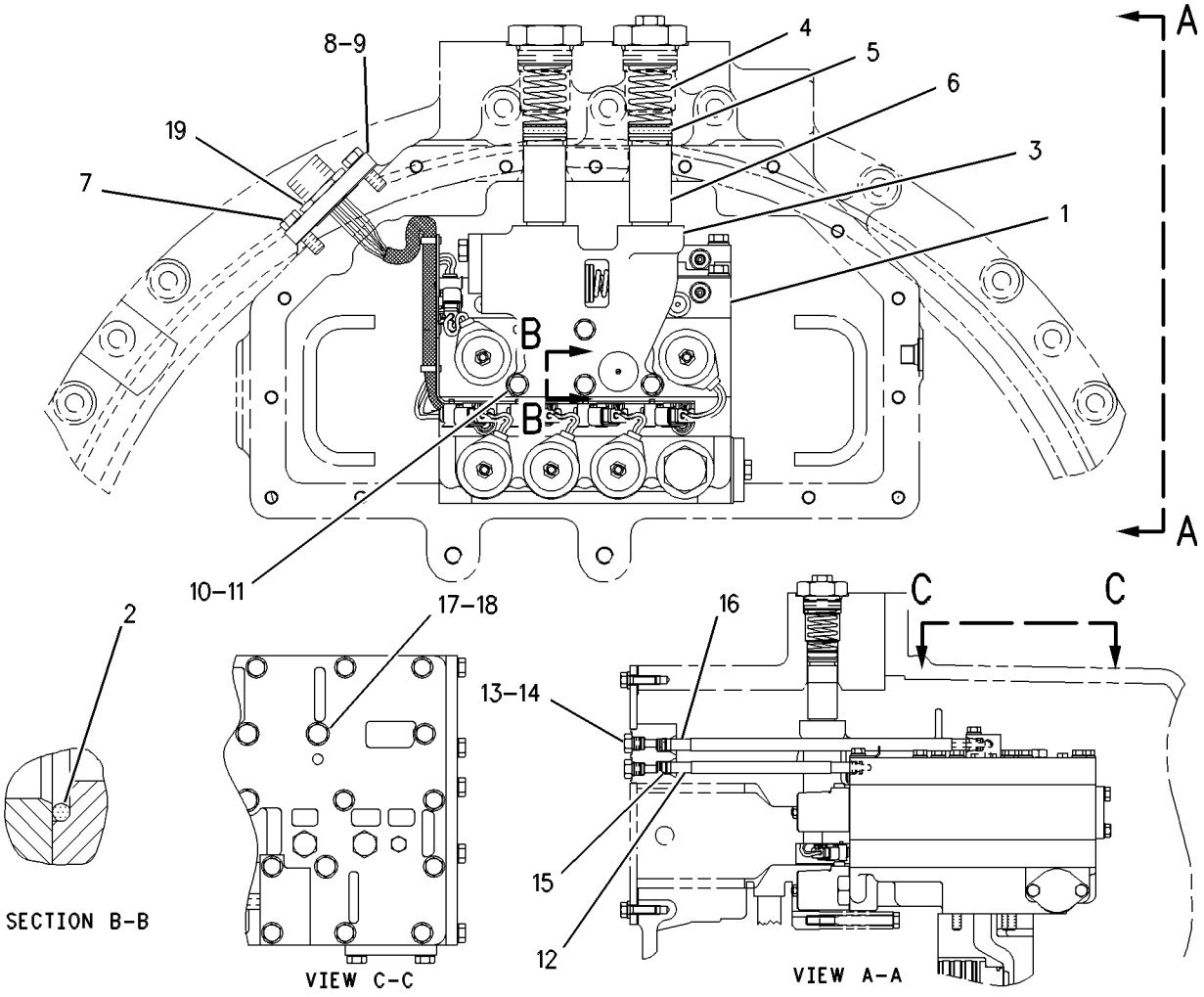

GRAPHIC #1 g00588223

POWER TRAIN

113-8276 CONTROL GP-TRANSMISSION HYD

S/N: 1LY1345-1475

PART OF 110-9296 TRANSMISSION AR

SMCS-3073 **i01742554**

NOTE	REF NO	GRAPHIC REF	PART NUMBER	QTY	PART NAME 1 2 3 4 5 6 (PRODUCT LEVEL)	SEE PAGE
CY	1	1	*153-5442*	1	VALVE GP-CONTROL	654
	2	1	**8M-4986**	2	SEAL-O-RING	
Y	3	1	**6Y-0771**	1	VALVE GP-PRIORITY	664
	4	1	**3T-4403**	2	SPRING	
	5	1	**8M-4432**	4	SEAL-O-RING	
	6	1	**3T-6457**	2	SLEEVE	
	7	1	**1A-2029**	2	BOLT (3/8-16X1.125 IN)	
	8	1	**104-6729**	1	RETAINER	
	9	1	**104-6730**	1	GASKET	
	10	1	**1D-4539**	4	BOLT (5/16-18X2.5 IN)	
	11	1	**9M-1974**	4	WASHER-HARD (8.8X16X2MM THK)	
	12	1	**6Y-0775**	1	SLEEVE	
	13	1	**3J-1907**	2	SEAL-O-RING	
	14	1	**9S-4191**	2	PLUG	
	15	1	**6V-4365**	4	SEAL-O-RING	
	16	1	**6Y-0774**	1	SLEEVE	
	17	1	**6B-1557**	4	BOLT (3/8-16X7.5 IN)	
	18	1	**5M-2894**	4	WASHER-HARD (10.2X18.5X2.5MM THK)	
	19	1	**6J-2419**	1	SEAL-O-RING	
		1	**125-5341**	1	NUT (1-1/4-18 THD)	

C-CHANGE FROM PREVIOUS TYPE
Y-SEPARATE ILLUSTRATION

113-8276 **CONTROL GP-TRANSMISSION HYD** *(contd.)* **i01742554**

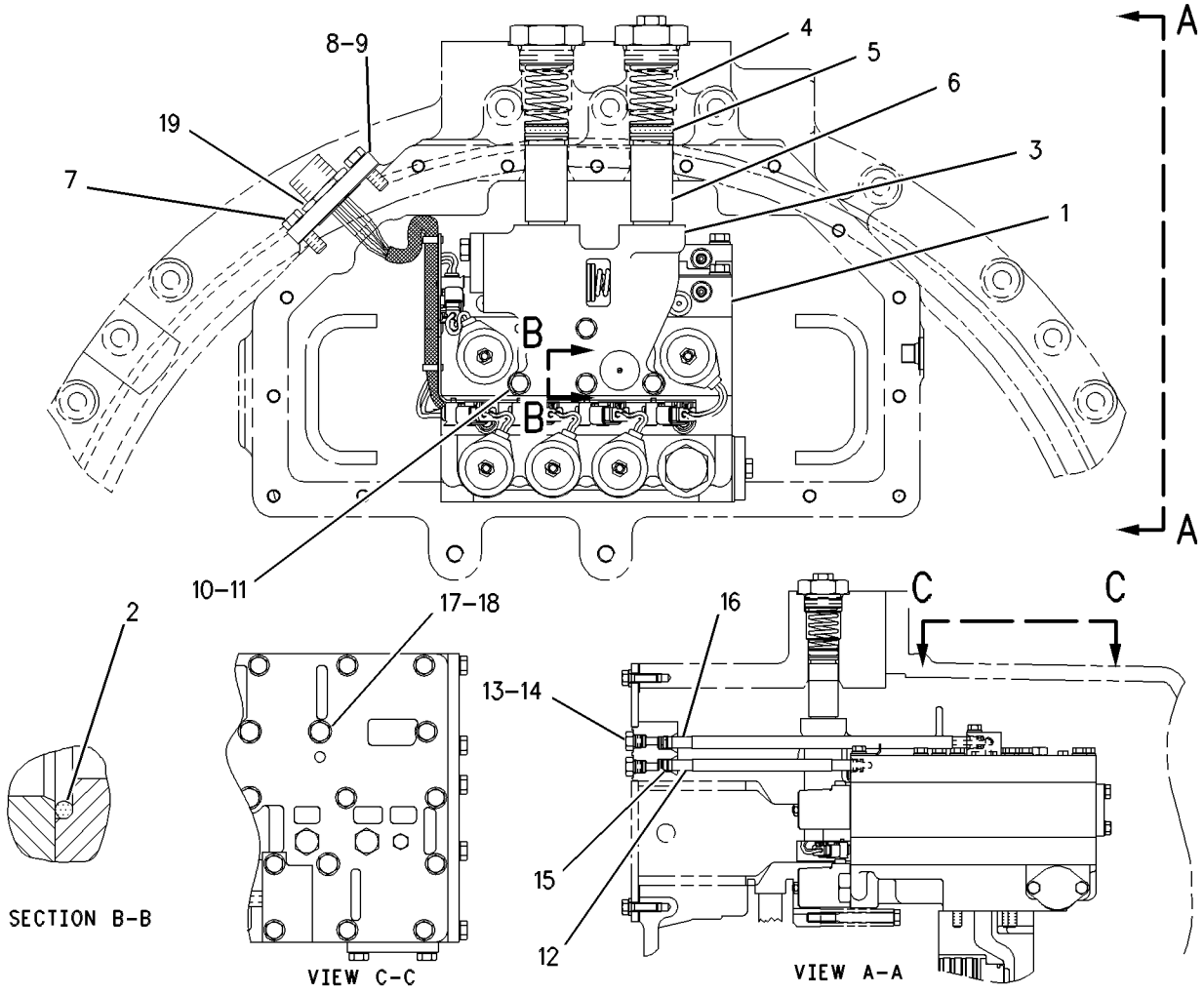

GRAPHIC #1 g00588237

POWER TRAIN

113-8276 CONTROL GP-TRANSMISSION HYD

S/N: 1LY1476-UP

PART OF 110-9296 TRANSMISSION AR

SMCS-3073 **i01742555**

NOTE	REF NO	GRAPHIC REF	PART NUMBER	QTY	PART NAME 1 2 3 4 5 6 (PRODUCT LEVEL)	SEE PAGE
CY	1	1	*157-3923*	1	VALVE GP-CONTROL	656
	2	1	**8M-4986**	2	SEAL-O-RING	
Y	3	1	**6Y-0771**	1	VALVE GP-PRIORITY	664
	4	1	**3T-4403**	2	SPRING	
	5	1	**8M-4432**	4	SEAL-O-RING	
	6	1	**3T-6457**	2	SLEEVE	
	7	1	**1A-2029**	2	BOLT (3/8-16X1.125 IN)	
	8	1	**104-6729**	1	RETAINER	
	9	1	**104-6730**	1	GASKET	
	10	1	**1D-4539**	4	BOLT (5/16-18X2.5 IN)	
	11	1	**9M-1974**	4	WASHER-HARD (8.8X16X2MM THK)	
	12	1	**6Y-0775**	1	SLEEVE	
	13	1	**3J-1907**	2	SEAL-O-RING	
	14	1	**9S-4191**	2	PLUG	
	15	1	**6V-4365**	4	SEAL-O-RING	
	16	1	**6Y-0774**	1	SLEEVE	
	17	1	**6B-1557**	4	BOLT (3/8-16X7.5 IN)	
	18	1	**5M-2894**	4	WASHER-HARD (10.2X18.5X2.5MM THK)	
	19	1	**6J-2419**	1	SEAL-O-RING	
		1	**125-5341**	1	NUT (1-1/4-18 THD)	

C-CHANGE FROM PREVIOUS TYPE
Y-SEPARATE ILLUSTRATION

113-8276 **CONTROL GP-TRANSMISSION HYD** *(contd.)* **i01742555**

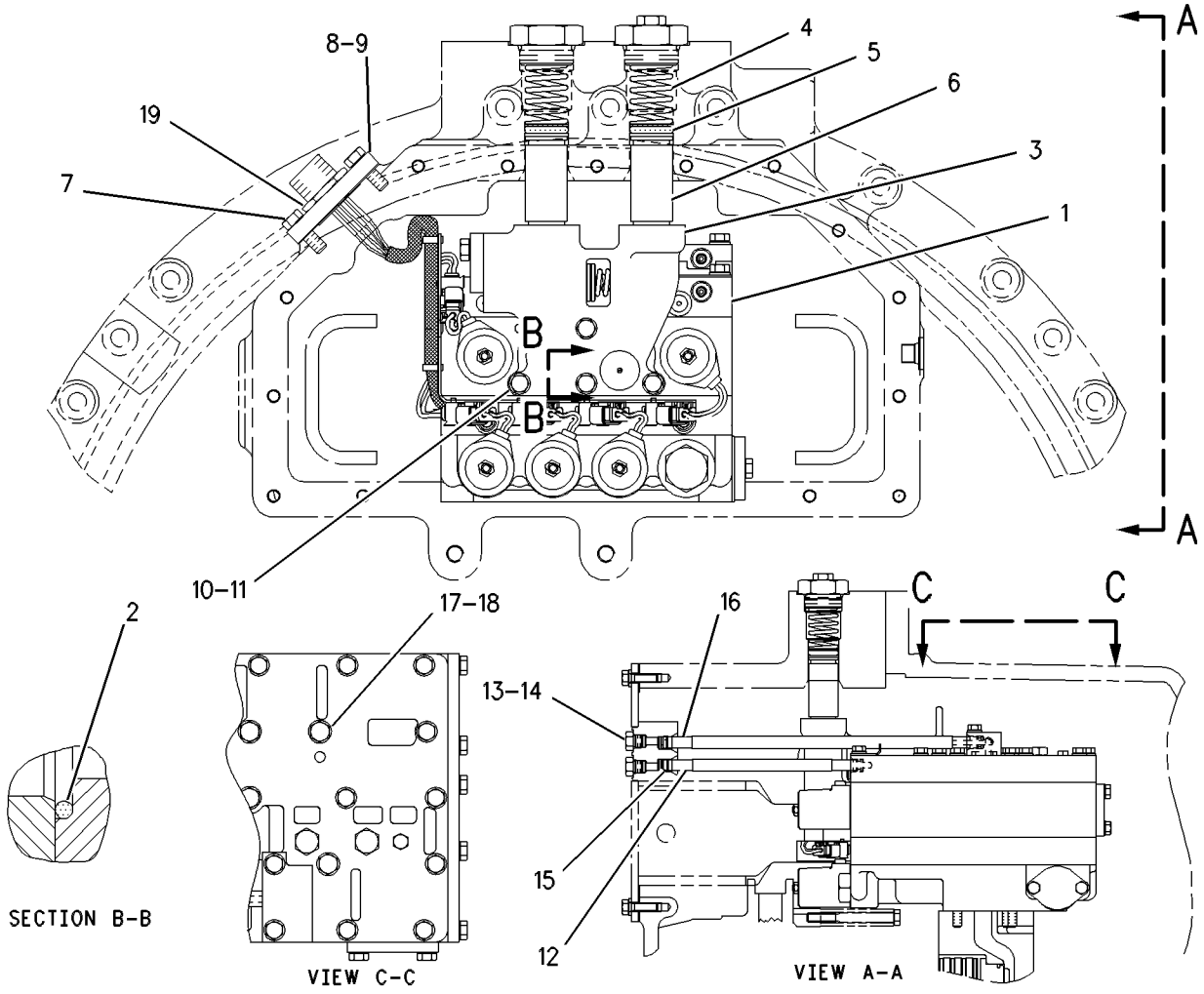

GRAPHIC #1 g00588242

POWER TRAIN

7C-6460 COOLER GP-TRANSMISSION OIL

S/N: 80M1-841

PART OF 115-7641 ENGINE AR

SMCS-1375 **i01401311**

NOTE	REF NO	GRAPHIC REF	PART NUMBER	QTY	PART NAME 1 2 3 4 5 6 (PRODUCT LEVEL)	SEE PAGE
YR	1	1	**7C-6461**	1	CORE GP-OIL COOLER	146
	2	1	**7S-8767**	2	GASKET	

R-REMFG PART MAY BE AVAILABLE
Y-SEPARATE ILLUSTRATION

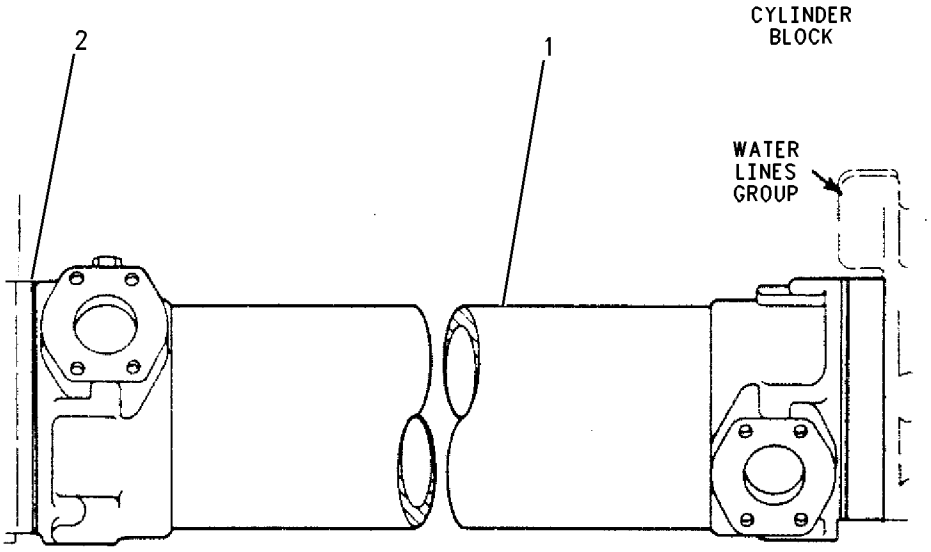

GRAPHIC #1 g00738850

POWER TRAIN

126-2853 COUPLING GP-PUMP

S/N: 3KR1-UP

SMCS-5062 **i01742558**

NOTE	REF NO	GRAPHIC REF	PART NUMBER	QTY	PART NAME 1 2 3 4 5 6 (PRODUCT LEVEL)	SEE PAGE
	1	1	**126-2854**	1	TUBE AS	
	2	1	**8T-2501**	6	BOLT (3/8-16X2 IN)	
	3	1	**8T-4896**	12	WASHER-HARD (10.2X18.5X2.5MM THK)	
	4	1	**3E-4880**	2	COUPLING AS	
					(EACH INCLUDES)	
	5	1	**3E-4876**	3	BUSHING AS	
	6	1	**6Y-2130**	3	BUSHING AS	
	7	1	**5S-7383**	6	BOLT (3/8-16X1.75 IN)	

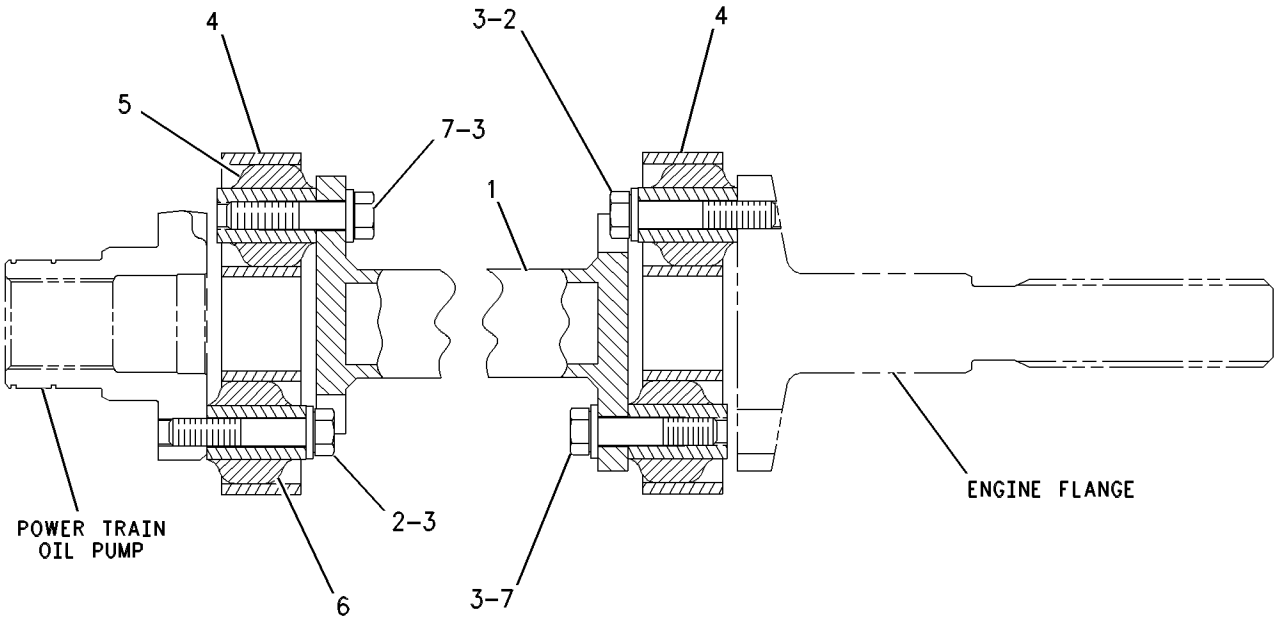

GRAPHIC #1 g00334496

POWER TRAIN

106-4150 DRAIN GP-ECOLOGY

S/N: 3KR1-UP; 1LY1-UP

PART OF 110-9293 CASE & PARTS GP-PLANETARY, 110-2769 TORQUE CONVERTER GP

SMCS-3100 **i01590582**

NOTE	REF NO	GRAPHIC REF	PART NUMBER	QTY	PART NAME 1 2 3 4 5 6 (PRODUCT LEVEL)	SEE PAGE
	1	1	**4N-3808**	1	PIN-SPRING	
	2	1	**5P-9658**	1	SEAL-O-RING	
A	3	1	**2H-3931**	1	SEAL-O-RING	

A-NOT PART OF THIS GROUP

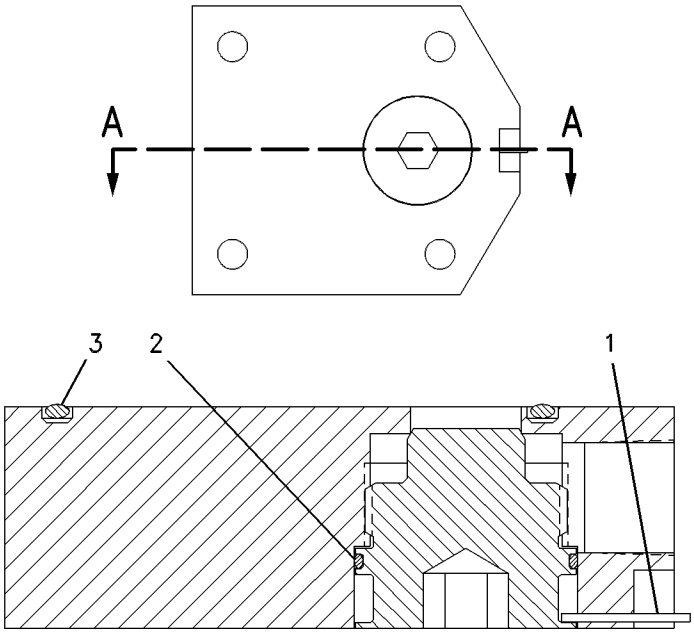

SECTION A-A

GRAPHIC #1 g00543496

MEMORANDA

POWER TRAIN

128-0948 FILTER GP-OIL

S/N: 80M1-UP

PART OF 115-7641, 135-7810, 155-0058 ENGINE AR

ALSO AN ATTACHMENT

SMCS-3004 **i01742559**

NOTE	REF NO	GRAPHIC REF	PART NUMBER	QTY	PART NAME 1 2 3 4 5 6 (PRODUCT LEVEL)	SEE PAGE
	1	1	**127-6256**	1	PLATE	
	2	1	**0S-1619**	4	BOLT (3/8-16X3 IN)	
	3	1	**5M-2894**	16	WASHER-HARD (10.2X18.5X2.5MM THK)	
	4	1	**189-0981**	1	BASE AS-OIL FILTER	
		1	**2W-8225**	2	STUD-TAPERLOCK	
	5	1	**8C-3445**	1	CAP-DUST	
	6	1	**8C-3446**	1	VALVE GP-FLUID SAMPLING	
	7	1	**7D-1649**	2	WASHER-HARD (13.5X32X5MM THK)	
	8	1	**117-8301**	1	SHIELD	
	9	1	**1R-0716**	2	FILTER AS-ENGINE OIL	
	10	1	**0L-2070**	4	BOLT (3/8-16X2.25 IN)	
	11	1	**127-4326**	1	BRACKET	
	12	1	**9S-8752**	5	NUT-FULL (3/8-16 THD)	
	13	1	**7W-3447**	3	SPACER (10.2X19.05X10.2MM THK)	
	14	1	**061-7540**	1	SEAL-O-RING	
	15	1	**8C-5230**	1	SEAL-O-RING	
	16	1	**9X-6458**	4	WASHER-HARD (10.2X22.5X3MM THK)	
	17	1	**115-8384**	4	RETAINER	
	18	1	**0L-1351**	4	BOLT (3/8-16X0.875 IN)	
	19	1	**5P-8831**	3	STUD-TAPERLOCK	
	20	1	**8N-6739**	2	RING-RETAINING	
	21	1	**127-8950**	1	TUBE AS	
	22	1	**127-8949**	1	TUBE AS	
	23	1	**0S-1594**	2	BOLT (3/8-16X1 IN)	
	24	1	**9S-4190**	1	PLUG	
	25	1	**4B-8641**	1	STUD	
	26	1	**0S-1588**	5	BOLT (3/8-16X1.25 IN)	
	27	1	**1A-2029**	1	BOLT (3/8-16X1.125 IN)	
	28	1	**4B-4161**	6	SCREW-DRIVE (NO.6X3/8)	
	29	1	**0S-1585**	2	BOLT (1/2-13X1.50 IN)	
	30	1	**125-9794**	1	SEAL-O-RING	
	31	1	**114-3824**	1	GASKET	
	32	1	**6V-5048**	1	SEAL-O-RING	
	33	1	**6V-3830**	2	SEAL-O-RING	
	34	1	**6V-4589**	1	SEAL-O-RING	
	35	1	**114-3825**	1	ELBOW	

128-0948 **FILTER GP-OIL** *(contd.)* **i01742559**

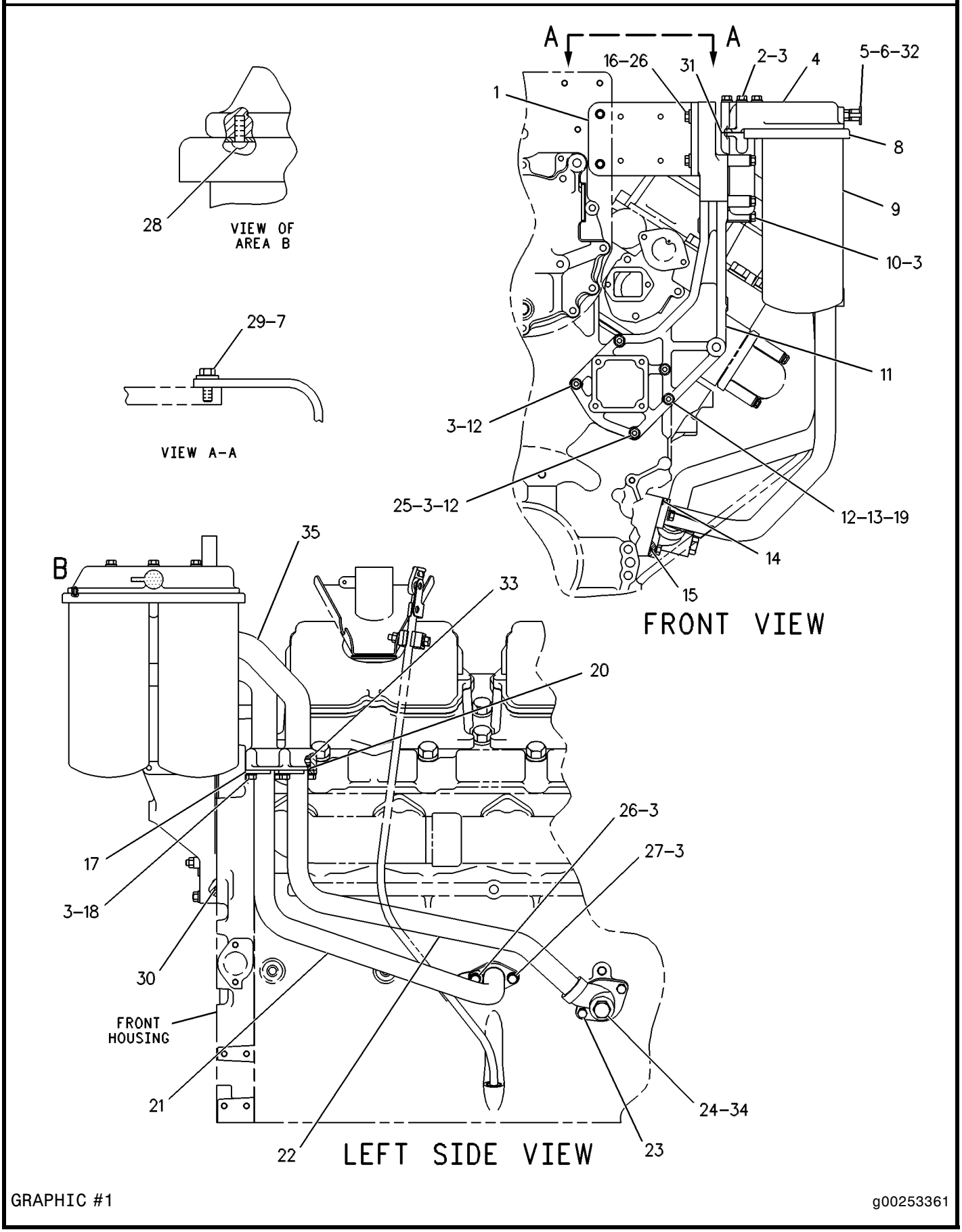

GRAPHIC #1 g00253361

POWER TRAIN

133-1280 FILTER GP-OIL

S/N: 3KR1-619
WITH HOUSING
PART OF 118-2486 LINES GP-POWER TRAIN OIL

SMCS-3004 **i01742560**

NOTE	REF NO	GRAPHIC REF	PART NUMBER	QTY	PART NAME 1 2 3 4 5 6 (PRODUCT LEVEL)	SEE PAGE
	1	1	**9U-9285**	1	BASE-HOUSING	
	2	1	**9S-4191**	2	PLUG	
	3	1	**3J-1907**	2	SEAL-O-RING	
	4	1	**133-1278**	1	HOUSING AS-OIL FILTER	
	5	1	**8M-6393**	1	RING-RETAINING	
	6	1	**133-1288**	1	RETAINER	
	7	1	**3S-8652**	1	SPRING	
	8	1	**9S-9334**	1	PLUG	
	9	1	**7M-8485**	1	SEAL-O-RING	
	10	1	**6T-9223**	1	SPRING	
	11	1	**6T-9222**	1	SPOOL	
	12	1	**9S-8008**	2	PLUG	
	13	1	**3D-2824**	2	SEAL-O-RING	
	14	1	**132-8875**	1	FILTER ELEMENT AS-OIL	
	15	1	**2S-8439**	1	SEAL-O-RING	
	16	1	**7X-0290**	6	BOLT (3/8-16X3.50 IN)	
	17	1	**8T-4896**	6	WASHER-HARD (10.2X18.5X2.5MM THK)	

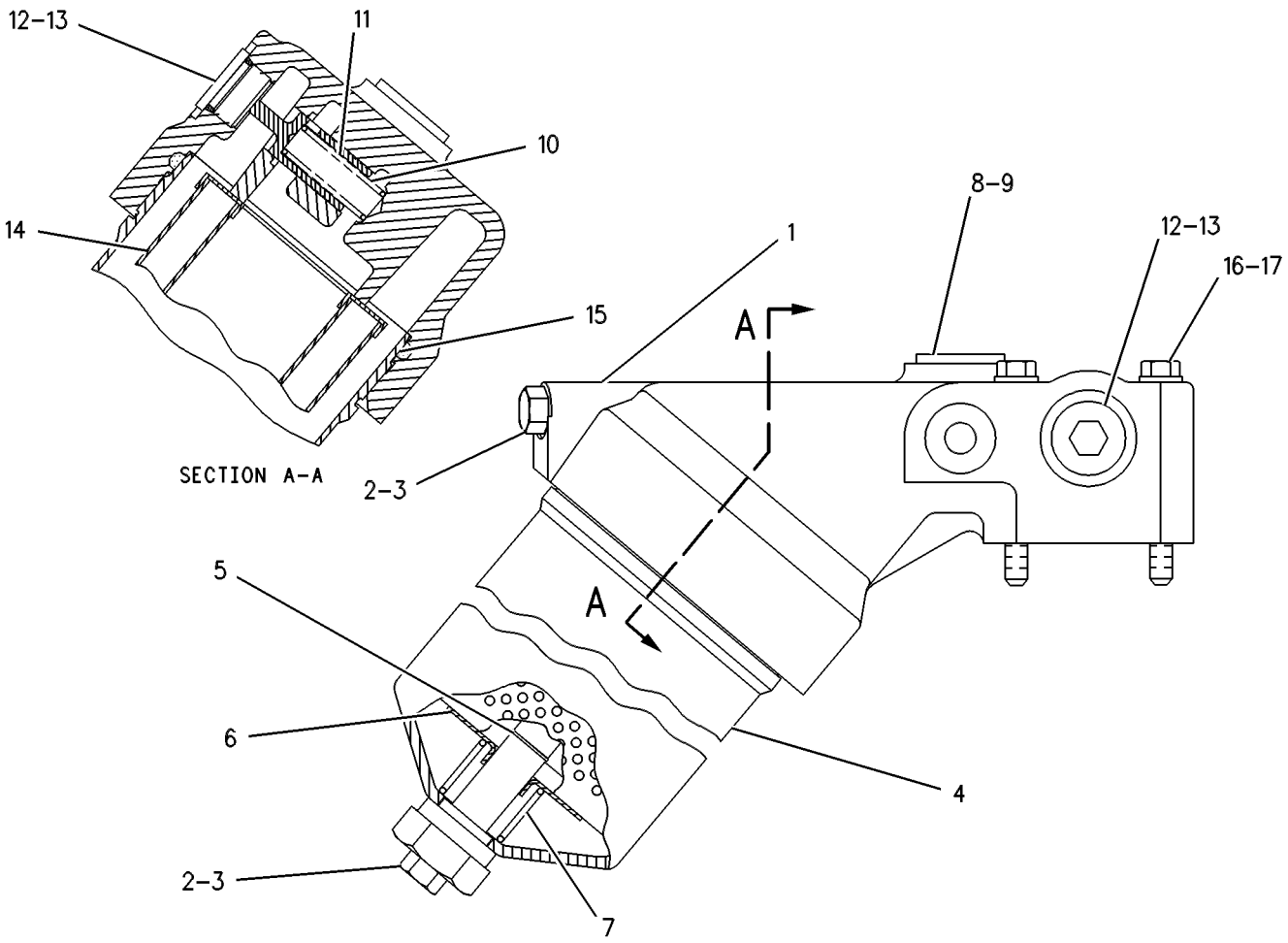

GRAPHIC #1 g00258593

MEMORANDA

POWER TRAIN

133-1296 FILTER GP-OIL

S/N: 3KR620-1177
WITH HOUSING
PART OF 118-2486 LINES GP-POWER TRAIN OIL

SMCS-3004 **i01742561**

NOTE	REF NO	GRAPHIC REF	PART NUMBER	QTY	PART NAME 1 2 3 4 5 6 (PRODUCT LEVEL)	SEE PAGE
	1	1	**126-7836**	1	BASE-HOUSING	
	2	1	**2S-4078**	1	SEAL-O-RING	
	3	1	**7M-1297**	1	SPRING	
	4	1	**9S-9334**	1	PLUG	
	5	1	**7M-8485**	1	SEAL-O-RING	
	6	1	**9S-8008**	1	PLUG	
	7	1	**3D-2824**	1	SEAL-O-RING	
	8	1	**8T-8915**	6	BOLT (3/8-16X3.25 IN)	
	9	1	**8T-4896**	6	WASHER-HARD (10.2X18.5X2.5MM THK)	
	10	1	**3S-8652**	1	SPRING	
	11	1	**9S-4191**	2	PLUG	
	12	1	**3J-1907**	2	SEAL-O-RING	
	13	1	**8M-6393**	1	RING-RETAINING	
	14	1	**133-1298**	1	RETAINER	
	15	1	**133-1279**	1	HOUSING AS-OIL FILTER	
	16	1	**5P-3620**	1	SEAL-O-RING	
	17	1	**133-2198**	1	SPRING	
	18	1	**7G-4998**	1	SPOOL-BYPASS	
	19	1	**132-8876**	1	FILTER ELEMENT AS-OIL	
	20	1	**9S-8010**	1	PLUG	

133-1296 **FILTER GP-OIL** *(contd.)* **i01742561**

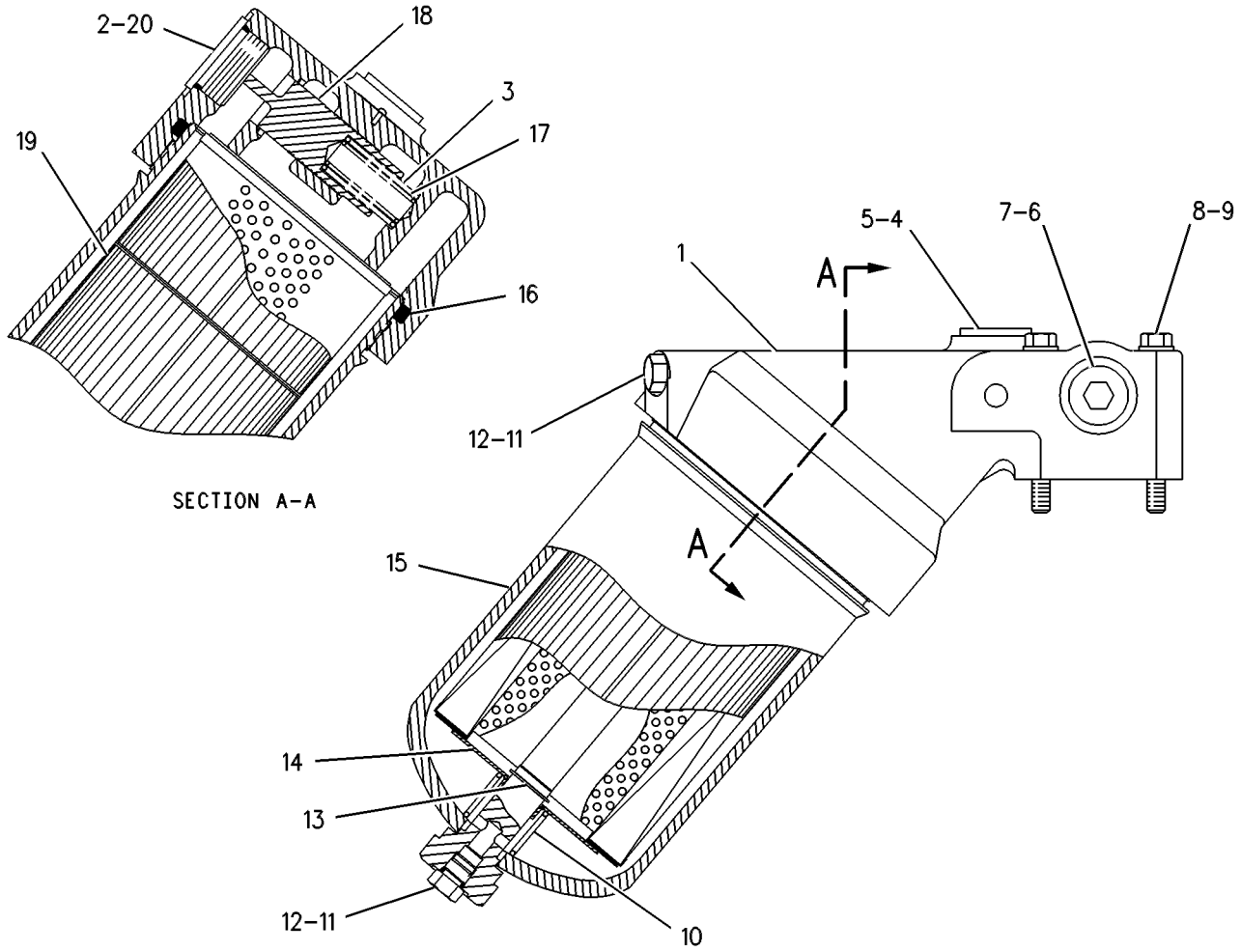

GRAPHIC #1 g00273821

POWER TRAIN

165-8428 FILTER GP-OIL

S/N: 3KR1178-UP

PART OF 118-2486 LINES GP-POWER TRAIN OIL

SMCS-3004 **i01742563**

NOTE	REF NO	GRAPHIC REF	PART NUMBER	QTY	PART NAME 1 2 3 4 5 6 (PRODUCT LEVEL)	SEE PAGE
	1	1	**126-7836**	1	BASE-HOUSING	
	2	1	**7M-1297**	1	SPRING	
	3	1	**2S-4078**	1	SEAL-O-RING	
	4	1	**9S-9334**	1	PLUG	
	5	1	**7M-8485**	1	SEAL-O-RING	
	6	1	**9S-8008**	1	PLUG	
	7	1	**3D-2824**	1	SEAL-O-RING	
	8	1	**8T-8915**	6	BOLT (3/8-16X3.25 IN)	
	9	1	**8T-4896**	6	WASHER-HARD (10.2X18.5X2.5MM THK)	
	10	1	**3S-8652**	1	SPRING	
	11	1	**9S-4191**	2	PLUG	
	12	1	**3J-1907**	2	SEAL-O-RING	
	13	1	**8M-6393**	1	RING-RETAINING	
	14	1	**165-8079**	1	RETAINER	
	15	1	**133-1279**	1	HOUSING AS-OIL FILTER	
	16	1	**5P-3620**	1	SEAL-O-RING	
	17	1	**133-2198**	1	SPRING	
	18	1	**7G-4998**	1	SPOOL-BYPASS	
	19	1	**132-8876**	1	FILTER ELEMENT AS-OIL	
	20	1	**9S-8010**	1	PLUG	

165-8428 FILTER GP-OIL *(contd.)* **i01742563**

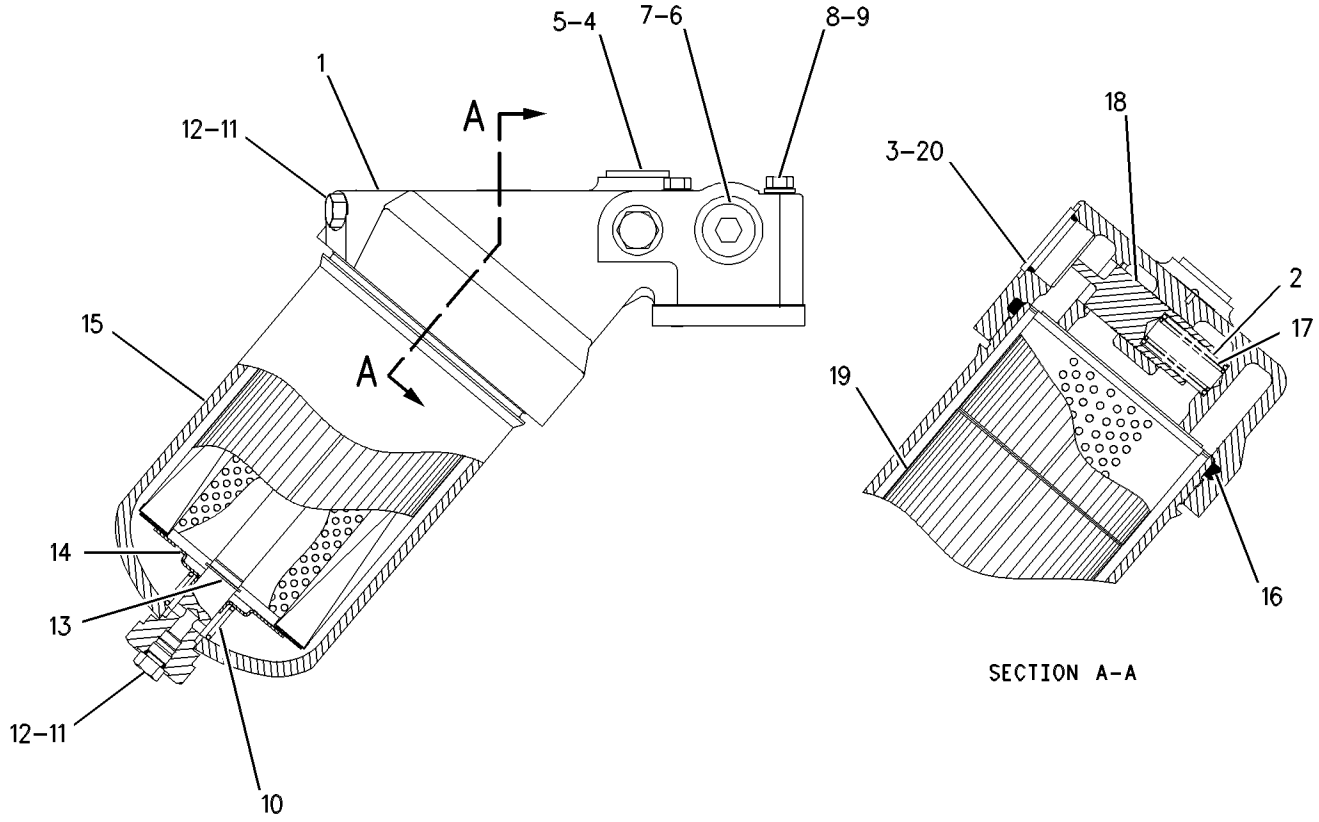

GRAPHIC #1 g00563128

POWER TRAIN

110-2655 FINAL DRIVE GP

S/N: 3KR1-UP

FIELD REPLACEMENT ORDER 110-2656—PAGE 566

TYPE 1

SMCS-4050 **i01742564**

NOTE	REF NO	GRAPHIC REF	PART NUMBER	QTY	PART NAME 1 2 3 4 5 6 (PRODUCT LEVEL)	SEE PAGE
	1	1	**8T-2502**	3	BOLT (3/8-16X1.125 IN)	
	2	1	**8T-4896**	3	WASHER-HARD (10.2X18.5X2.5MM THK)	
	3	1	**030-8538**	8	BOLT (1/2-13X1.25 IN)	
	4	1	**5P-8245**	8	WASHER-HARD (13.5X25.5X3MM THK)	
	5	1	**3P-8822**	1	COVER	
	6	1	**6V-3298**	1	PLUG-MAGNETIC	
	7	1	**2S-4078**	1	SEAL-O-RING	
	8	1	**9S-4185**	1	PLUG	
	9	1	**3K-0360**	1	SEAL-O-RING	
	10	1	**5F-7054**	1	SEAL-O-RING	
	11	1	**3T-3294**	1	CARRIER-PLANETARY	
	12	1	**5D-7523**	1	SEAL-O-RING	
	13	1	**9M-5894**	1	SEAL-O-RING	
	14	1	**2S-0613**	1	RING-RETAINING	
	15	1	**3P-8827**	4	PLATE	
	16	1	**6V-1653**	4	SEAL-QUAD RING	
	17	1	**8T-9400**	35	BOLT (7/8-9X2.5 IN)	
	18	1	**8C-6913**	35	WASHER-HARD (24X41.5X4MM THK)	
	19	1	**1L-7203**	8	CONE-BEARING	
	20	1	**1L-7319**	8	CUP-BEARING	
	21	1	**9W-9134**	4	GEAR-PLANETARY (25 TEETH)	
	22	1	**9W-9133**	1	GEAR-SUN (22 TEETH)	
	23	1	**7S-4326**	1	DOWEL	
	24	1	**9W-9136**	1	CARRIER-PLANETARY	
	25	1	**3P-8820**	1	RING-THRUST	
	26	1	**6F-8146**	1	SEAL-O-RING	
	27	1	**8E-3124**	1	RETAINER	
	28	1	**5K-7143**	16	BOLT-SELF LOCKING (1/2-13X1.5 IN)	
	29	1	**110-2665**	4	SHAFT-PLANETARY	
	30	1	**5P-8944**	1	RING-RETAINING	
	31	1	**8P-5698**	4	PLATE	
	32	1	**5D-0353**	8	BOLT-LOCKING (3/8-16X1 IN)	
	33	1	**110-2662**	1	GEAR-SUN (18 TEETH)	
	34	1	**9P-3801**	4	SHAFT-GOVERNOR CONTROL	
	35	1	**147-0071**	1	BEARING-THRUST	
	36	1	**110-2671**	1	RETAINER	
	37	1	**9P-3555**	1	GEAR-RING (74 TEETH)	
	38	1	**1B-3980**	8	CONE-BEARING	
	39	1	**1B-3978**	8	CUP-BEARING	
	40	1	**9W-9132**	4	GEAR-PLANETARY (27 TEETH)	
	41	1	**9P-3657**	4	RING-LOCK	
	42	1	**6T-0609**	16	PIN	
	43	1	**9W-9135**	1	HUB-REACTION	
	44	1	**6T-6566**	1	RING-RETAINING	
	45	1	**124-2375**	1	SEAL-LIP TYPE	
	46	1	**126-0587**	1	CONE-SPECIAL TAPERED	
	47	1	**6V-8281**	1	CUP-BEARING	
	48	1	**110-2664**	1	HUB-SPROCKET	
	49	1	**3D-9133**	1	CUP-BEARING	
	50	1	**126-0588**	1	CONE-SPECIAL TAPERED	
	51	1	**130-6889**	1	SEAL GP-DUO-CONE	
		1	**127-0116**	2	RING-TORIC	
R	52	1	**110-2663**	1	HUB-SPINDLE	
	53	1	**8D-4771**	1	SEAL-O-RING	
Y	54	1	*6T-9538*	1	SEGMENT GP-SPROCKET	639

110-2655 FINAL DRIVE GP *(contd.)*

i01742564

NOTE	REF NO	GRAPHIC REF	PART NUMBER	QTY	PART NAME 1 2 3 4 5 6 (PRODUCT LEVEL)	SEE PAGE
	55	1	**8T-9412**	3	BOLT-12 POINT HEAD (1/2-13X1.5 IN)	
	56	1	**5P-8250**	30	WASHER (28X49X5MM THK)	
	57	1	**1D-4640**	30	BOLT (1-8X4.25 IN)	
	58	1	**110-2674**	1	RING-THRUST	
	59	1	**110-2670**	1	HOLDER-SEAL	
	60	1	**8T-8917**	4	BOLT (1/2-13X1.25 IN)	
	61	1	**8T-4223**	4	WASHER-HARD (13.5X25.5X3MM THK)	

R-REMFG PART MAY BE AVAILABLE
Y-SEPARATE ILLUSTRATION

110-2655 FINAL DRIVE GP *(contd.)* **i01742564**

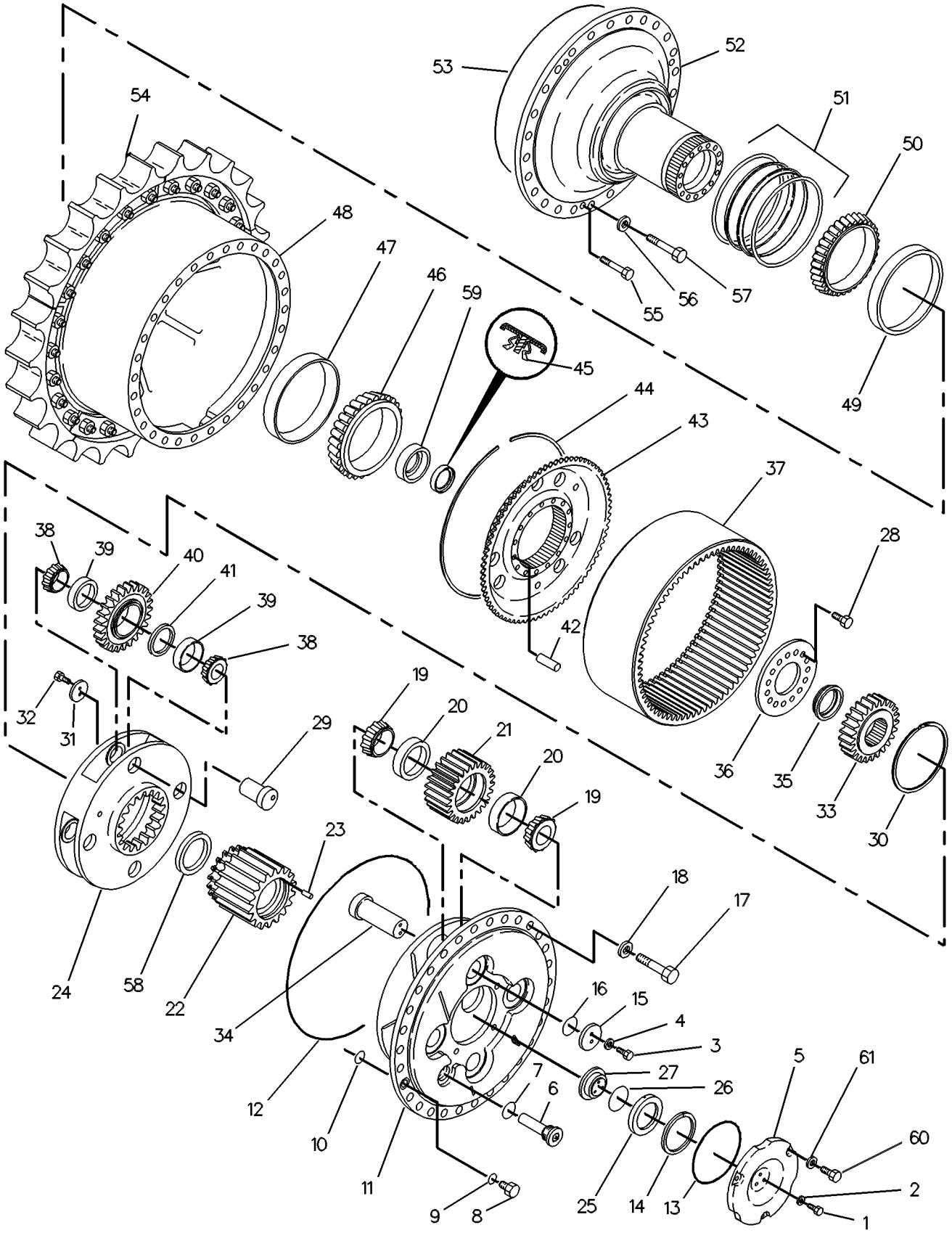

GRAPHIC #1 g00252851

MEMORANDA

POWER TRAIN

110-2655 FINAL DRIVE GP

S/N: 3KR1-UP

FIELD REPLACEMENT ORDER 110-2656—PAGE 566

TYPE 2

SMCS-4050 **i01742565**

NOTE	REF NO	GRAPHIC REF	PART NUMBER	QTY	PART NAME 1 2 3 4 5 6 (PRODUCT LEVEL)	SEE PAGE
	1	1	**8T-2502**	3	BOLT (3/8-16X1.125 IN)	
	2	1	**8T-4896**	3	WASHER-HARD (10.2X18.5X2.5MM THK)	
	3	1	**030-8538**	8	BOLT (1/2-13X1.25 IN)	
	4	1	**5P-8245**	8	WASHER-HARD (13.5X25.5X3MM THK)	
	5	1	**3P-8822**	1	COVER	
	6	1	**6V-3298**	1	PLUG-MAGNETIC	
	7	1	**2S-4078**	1	SEAL-O-RING	
	8	1	**9S-4185**	1	PLUG	
	9	1	**3K-0360**	1	SEAL-O-RING	
	10	1	**5F-7054**	1	SEAL-O-RING	
	11	1	**3T-3294**	1	CARRIER-PLANETARY	
	12	1	**5D-7523**	1	SEAL-O-RING	
	13	1	**9M-5894**	1	SEAL-O-RING	
	14	1	**2S-0613**	1	RING-RETAINING	
	15	1	**3P-8827**	4	PLATE	
	16	1	**6V-1653**	4	SEAL-QUAD RING	
	17	1	**8T-9400**	35	BOLT (7/8-9X2.5 IN)	
	18	1	**8C-6913**	35	WASHER-HARD (24X41.5X4MM THK)	
	19	1	**1L-7203**	8	CONE-BEARING	
	20	1	**1L-7319**	8	CUP-BEARING	
	21	1	**9W-9134**	4	GEAR-PLANETARY (25 TEETH)	
	22	1	**9W-9133**	1	GEAR-SUN (22 TEETH)	
	23	1	**7S-4326**	1	DOWEL	
	24	1	**9W-9136**	1	CARRIER-PLANETARY	
	25	1	**3P-8820**	1	RING-THRUST	
	26	1	**6F-8146**	1	SEAL-O-RING	
	27	1	**8E-3124**	1	RETAINER	
	28	1	**5K-7143**	16	BOLT-SELF LOCKING (1/2-13X1.5 IN)	
	29	1	**110-2665**	4	SHAFT-PLANETARY	
	30	1	**5P-8944**	1	RING-RETAINING	
	31	1	**8P-5698**	4	PLATE	
	32	1	**5D-0353**	8	BOLT-LOCKING (3/8-16X1 IN)	
	33	1	**110-2662**	1	GEAR-SUN (18 TEETH)	
	34	1	**9P-3801**	4	SHAFT-GOVERNOR CONTROL	
	35	1	**147-0071**	1	BEARING-THRUST	
	36	1	**110-2671**	1	RETAINER	
	37	1	**9P-3555**	1	GEAR-RING (74 TEETH)	
	38	1	**1B-3980**	8	CONE-BEARING	
	39	1	**1B-3978**	8	CUP-BEARING	
	40	1	**9W-9132**	4	GEAR-PLANETARY (27 TEETH)	
	41	1	**9P-3657**	4	RING-LOCK	
	42	1	**6T-0609**	16	PIN	
	43	1	**9W-9135**	1	HUB-REACTION	
	44	1	**6T-6566**	1	RING-RETAINING	
	45	1	**124-2375**	1	SEAL-LIP TYPE	
	46	1	**126-0587**	1	CONE-SPECIAL TAPERED	
	47	1	**6V-8281**	1	CUP-BEARING	
	48	1	**110-2664**	1	HUB-SPROCKET	
	49	1	**3D-9133**	1	CUP-BEARING	
	50	1	**126-0588**	1	CONE-SPECIAL TAPERED	
	51	1	**130-6889**	1	SEAL GP-DUO-CONE	
		1	**127-0116**	2	RING-TORIC	
R	52	1	**110-2663**	1	HUB-SPINDLE	
	53	1	**8D-4771**	1	SEAL-O-RING	
CY	54	1	*160-4928*	1	SEGMENT GP-SPROCKET	640

110-2655 FINAL DRIVE GP *(contd.)*

i01742565

NOTE	REF NO	GRAPHIC REF	PART NUMBER	QTY	PART NAME 1 2 3 4 5 6 (PRODUCT LEVEL)	SEE PAGE
	55	1	**8T-9412**	3	BOLT-12 POINT HEAD (1/2-13X1.5 IN)	
	56	1	**5P-8250**	30	WASHER (28X49X5MM THK)	
	57	1	**1D-4640**	30	BOLT (1-8X4.25 IN)	
	58	1	**110-2674**	1	RING-THRUST	
	59	1	**110-2670**	1	HOLDER-SEAL	
	60	1	**8T-8917**	4	BOLT (1/2-13X1.25 IN)	
	61	1	**8T-4223**	4	WASHER-HARD (13.5X25.5X3MM THK)	

C-CHANGE FROM PREVIOUS TYPE
R-REMFG PART MAY BE AVAILABLE
Y-SEPARATE ILLUSTRATION

110-2655 FINAL DRIVE GP *(contd.)* **i01742565**

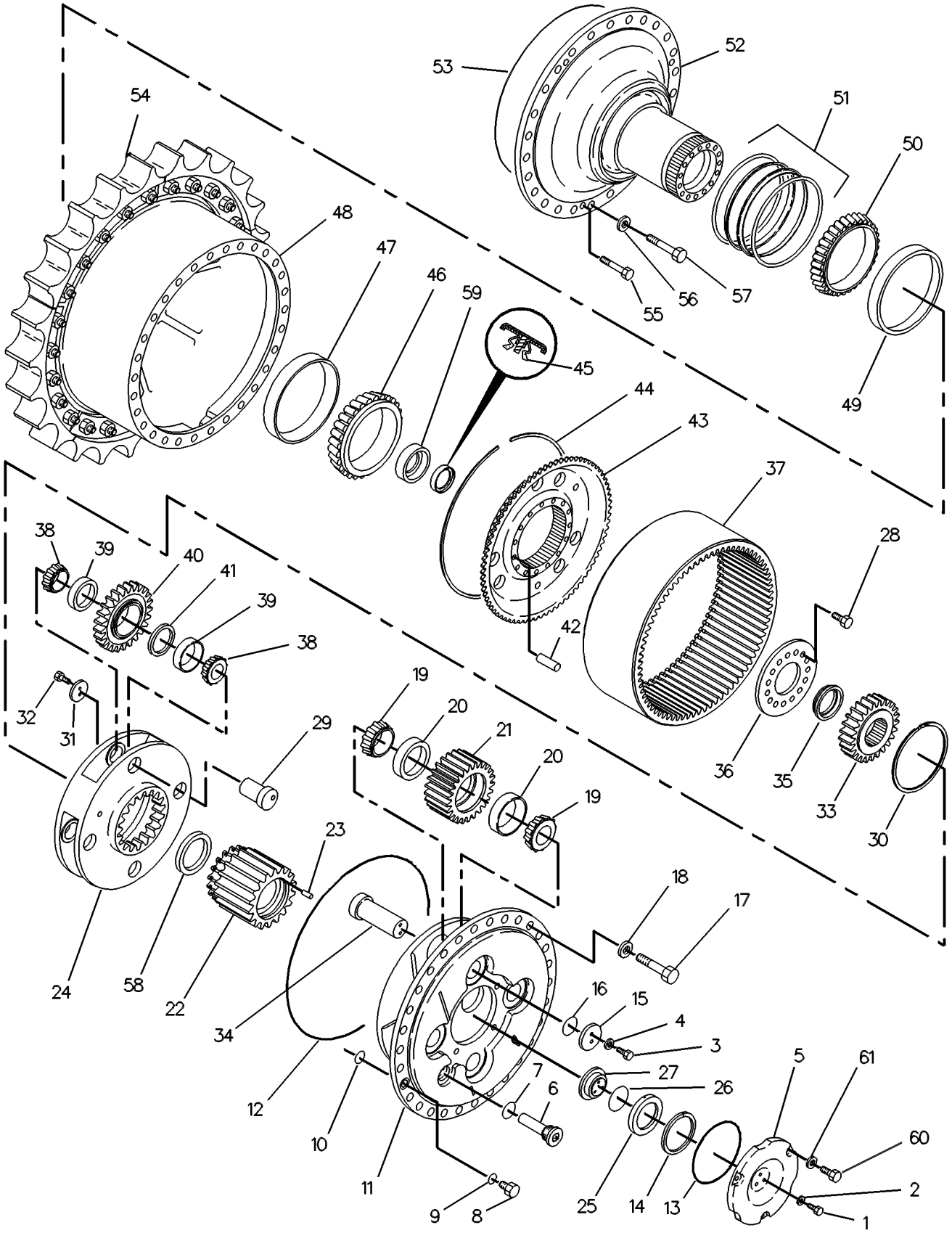

GRAPHIC #1 g00252851

MEMORANDA

POWER TRAIN

110-2656 FINAL DRIVE GP*R

S/N: 3KR1-1328

FIELD REPLACEMENT FOR 110-2655—PAGE 558

SMCS-4050 **i01742566**

NOTE	REF NO	GRAPHIC REF	PART NUMBER	QTY	PART NAME 1 2 3 4 5 6 (PRODUCT LEVEL)	SEE PAGE
	1	1	**8T-2502**	3	BOLT (3/8-16X1.125 IN)	
	2	1	**8T-4896**	3	WASHER-HARD (10.2X18.5X2.5MM THK)	
	3	1	**030-8538**	8	BOLT (1/2-13X1.25 IN)	
	4	1	**5P-8245**	8	WASHER-HARD (13.5X25.5X3MM THK)	
	5	1	**3P-8822**	1	COVER	
	6	1	**6V-3298**	1	PLUG-MAGNETIC	
	7	1	**2S-4078**	1	SEAL-O-RING	
	8	1	**9S-4185**	1	PLUG	
	9	1	**3K-0360**	1	SEAL-O-RING	
	10	1	**5F-7054**	1	SEAL-O-RING	
	11	1	**3T-3294**	1	CARRIER-PLANETARY	
	12	1	**5D-7523**	1	SEAL-O-RING	
	13	1	**9M-5894**	1	SEAL-O-RING	
	14	1	**2S-0613**	1	RING-RETAINING	
	15	1	**3P-8827**	4	PLATE	
	16	1	**6V-1653**	4	SEAL-QUAD RING	
	17	1	**8T-9400**	35	BOLT (7/8-9X2.5 IN)	
	18	1	**8C-6913**	35	WASHER-HARD (24X41.5X4MM THK)	
	19	1	**1L-7203**	8	CONE-BEARING	
	20	1	**1L-7319**	8	CUP-BEARING	
	21	1	**9W-9134**	4	GEAR-PLANETARY (25 TEETH)	
	22	1	**9W-9133**	1	GEAR-SUN (22 TEETH)	
	23	1	**7S-4326**	1	DOWEL	
	24	1	**9W-9136**	1	CARRIER-PLANETARY	
	25	1	**3P-8820**	1	RING-THRUST	
	26	1	**6F-8146**	1	SEAL-O-RING	
	27	1	**8E-3124**	1	RETAINER	
	28	1	**5K-7143**	16	BOLT-SELF LOCKING (1/2-13X1.5 IN)	
	29	1	**110-2665**	4	SHAFT-PLANETARY	
	30	1	**5P-8944**	1	RING-RETAINING	
	31	1	**8P-5698**	4	PLATE	
	32	1	**5D-0353**	8	BOLT-LOCKING (3/8-16X1 IN)	
	33	1	**110-2662**	1	GEAR-SUN (18 TEETH)	
	34	1	**9P-3801**	4	SHAFT-GOVERNOR CONTROL	
	35	1	**110-2673**	1	BEARING-THRUST	
	36	1	**110-2671**	1	RETAINER	
	37	1	**9P-3555**	1	GEAR-RING (74 TEETH)	
	38	1	**1B-3980**	8	CONE-BEARING	
	39	1	**1B-3978**	8	CUP-BEARING	
	40	1	**9W-9132**	4	GEAR-PLANETARY (27 TEETH)	
	41	1	**9P-3657**	4	RING-LOCK	
	42	1	**6T-0609**	16	PIN	
	43	1	**9W-9135**	1	HUB-REACTION	
	44	1	**6T-6566**	1	RING-RETAINING	
	45	1	**124-2375**	1	SEAL-LIP TYPE	
	46	1	**126-0587**	1	CONE-SPECIAL TAPERED	
	47	1	**6V-8281**	1	CUP-BEARING	
	48	1	**110-2664**	1	HUB-SPROCKET	
	49	1	**3D-9133**	1	CUP-BEARING	
	50	1	**126-0588**	1	CONE-SPECIAL TAPERED	
	51	1	**130-6889**	1	SEAL GP-DUO-CONE	
		1	**127-0116**	2	RING-TORIC	
R	52	1	**110-2663**	1	HUB-SPINDLE	
	53	1	**8D-4771**	1	SEAL-O-RING	
	54	1	**8T-4223**	4	WASHER-HARD (13.5X25.5X3MM THK)	
	55	1	**8T-8917**	4	BOLT (1/2-13X1.25 IN)	

110-2656 FINAL DRIVE GP *(contd.)*

i01742566

NOTE	REF NO	GRAPHIC REF	PART NUMBER	QTY	PART NAME 1 2 3 4 5 6 (PRODUCT LEVEL)	SEE PAGE
	56	1	**110-2670**	1	HOLDER-SEAL	
	57	1	**110-2674**	1	RING-THRUST	

R-REMFG PART MAY BE AVAILABLE

110-2656 FINAL DRIVE GP *(contd.)* **i01742566**

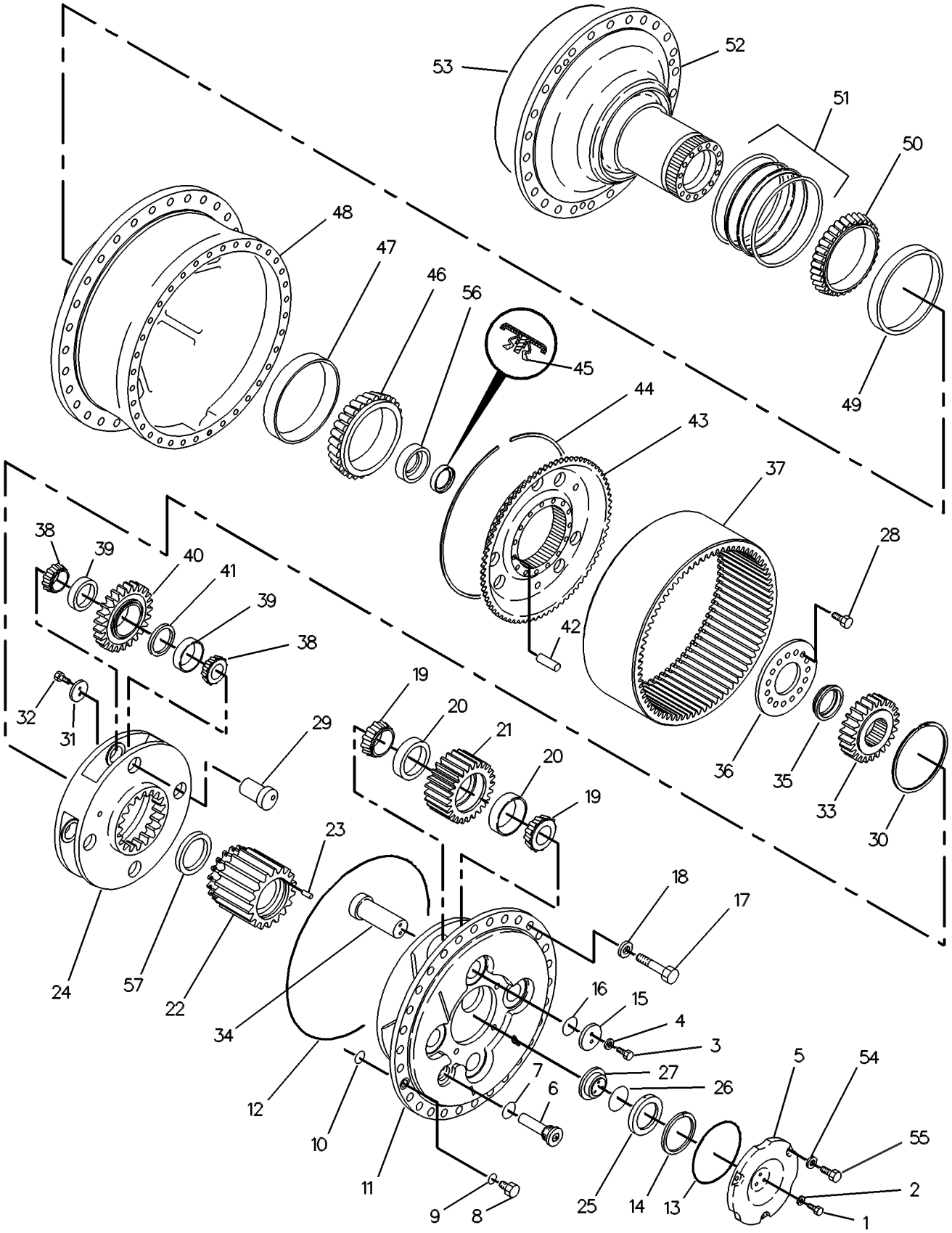

GRAPHIC #1 g00252846

MEMORANDA

POWER TRAIN

110-2656 FINAL DRIVE GP*R

S/N: 3KR1329-UP

FIELD REPLACEMENT FOR 110-2655—PAGE 558

SMCS-4050 **i01742567**

NOTE	REF NO	GRAPHIC REF	PART NUMBER	QTY	PART NAME 1 2 3 4 5 6 (PRODUCT LEVEL)	SEE PAGE
	1	1	**8T-2502**	3	BOLT (3/8-16X1.125 IN)	
	2	1	**8T-4896**	3	WASHER-HARD (10.2X18.5X2.5MM THK)	
	3	1	**030-8538**	8	BOLT (1/2-13X1.25 IN)	
	4	1	**5P-8245**	8	WASHER-HARD (13.5X25.5X3MM THK)	
	5	1	**3P-8822**	1	COVER	
	6	1	**6V-3298**	1	PLUG-MAGNETIC	
	7	1	**2S-4078**	1	SEAL-O-RING	
	8	1	**9S-4185**	1	PLUG	
	9	1	**3K-0360**	1	SEAL-O-RING	
	10	1	**5F-7054**	1	SEAL-O-RING	
	11	1	**3T-3294**	1	CARRIER-PLANETARY	
	12	1	**5D-7523**	1	SEAL-O-RING	
	13	1	**9M-5894**	1	SEAL-O-RING	
	14	1	**2S-0613**	1	RING-RETAINING	
	15	1	**3P-8827**	4	PLATE	
	16	1	**6V-1653**	4	SEAL-QUAD RING	
	17	1	**8T-9400**	35	BOLT (7/8-9X2.5 IN)	
	18	1	**8C-6913**	35	WASHER-HARD (24X41.5X4MM THK)	
	19	1	**1L-7203**	8	CONE-BEARING	
	20	1	**1L-7319**	8	CUP-BEARING	
	21	1	**9W-9134**	4	GEAR-PLANETARY (25 TEETH)	
	22	1	**9W-9133**	1	GEAR-SUN (22 TEETH)	
	23	1	**7S-4326**	1	DOWEL	
	24	1	**9W-9136**	1	CARRIER-PLANETARY	
	25	1	**3P-8820**	1	RING-THRUST	
	26	1	**6F-8146**	1	SEAL-O-RING	
	27	1	**8E-3124**	1	RETAINER	
	28	1	**5K-7143**	16	BOLT-SELF LOCKING (1/2-13X1.5 IN)	
	29	1	**110-2665**	4	SHAFT-PLANETARY	
	30	1	**5P-8944**	1	RING-RETAINING	
	31	1	**8P-5698**	4	PLATE	
	32	1	**5D-0353**	8	BOLT-LOCKING (3/8-16X1 IN)	
	33	1	**110-2662**	1	GEAR-SUN (18 TEETH)	
	34	1	**9P-3801**	4	SHAFT-GOVERNOR CONTROL	
C	35	1	**147-0071**	1	BEARING-THRUST	
	36	1	**110-2671**	1	RETAINER	
	37	1	**9P-3555**	1	GEAR-RING (74 TEETH)	
	38	1	**1B-3980**	8	CONE-BEARING	
	39	1	**1B-3978**	8	CUP-BEARING	
	40	1	**9W-9132**	4	GEAR-PLANETARY (27 TEETH)	
	41	1	**9P-3657**	4	RING-LOCK	
	42	1	**6T-0609**	16	PIN	
	43	1	**9W-9135**	1	HUB-REACTION	
	44	1	**6T-6566**	1	RING-RETAINING	
	45	1	**124-2375**	1	SEAL-LIP TYPE	
	46	1	**126-0587**	1	CONE-SPECIAL TAPERED	
	47	1	**6V-8281**	1	CUP-BEARING	
	48	1	**110-2664**	1	HUB-SPROCKET	
	49	1	**3D-9133**	1	CUP-BEARING	
	50	1	**126-0588**	1	CONE-SPECIAL TAPERED	
	51	1	**130-6889**	1	SEAL GP-DUO-CONE	
		1	**127-0116**	2	RING-TORIC	
R	52	1	**110-2663**	1	HUB-SPINDLE	
	53	1	**8D-4771**	1	SEAL-O-RING	
	54	1	**8T-4223**	4	WASHER-HARD (13.5X25.5X3MM THK)	
	55	1	**8T-8917**	4	BOLT (1/2-13X1.25 IN)	

110-2656 FINAL DRIVE GP *(contd.)*

i01742567

NOTE	REF NO	GRAPHIC REF	PART NUMBER	QTY	PART NAME 1 2 3 4 5 6 (PRODUCT LEVEL)	SEE PAGE
	56	1	**110-2670**	1	HOLDER-SEAL	
	57	1	**110-2674**	1	RING-THRUST	

C-CHANGE FROM PREVIOUS TYPE
R-REMFG PART MAY BE AVAILABLE

110-2656 FINAL DRIVE GP *(contd.)* **i01742567**

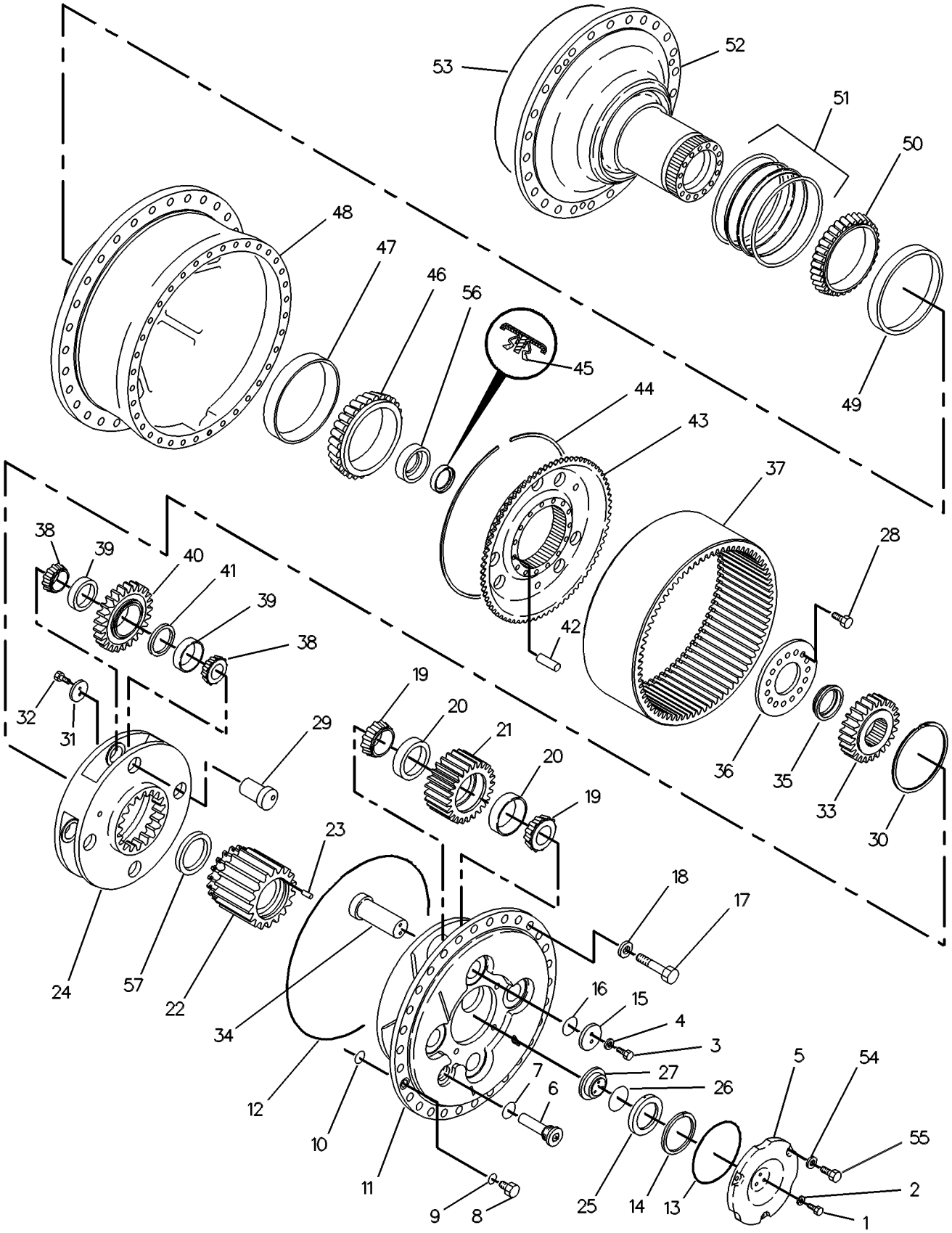

GRAPHIC #1 g00252846

MEMORANDA

POWER TRAIN

110-2780 FINAL DRIVE GP

S/N: 3KR1-UP
ARCTIC
PART OF 130-9719 ARCTIC AR
AN ATTACHMENT
TYPE 1

SMCS-4050 **i01742691**

NOTE	REF NO	GRAPHIC REF	PART NUMBER	QTY	PART NAME 1 2 3 4 5 6 (PRODUCT LEVEL)	SEE PAGE
	1	1	**8D-4771**	1	SEAL-O-RING	
	2	1	**8T-9412**	3	BOLT-12 POINT HEAD (1/2-13X1.5 IN)	
R	3	1	**110-2663**	1	HUB-SPINDLE	
	4	1	**118-2900**	1	SEAL GP-DUO-CONE	
		1	**3P-1849**	2	RING-SEALING	
	5	1	**126-0588**	1	CONE-SPECIAL TAPERED	
	6	1	**3D-9133**	1	CUP-BEARING	
	7	1	**6V-8281**	1	CUP-BEARING	
	8	1	**126-0587**	1	CONE-SPECIAL TAPERED	
	9	1	**110-2664**	1	HUB-SPROCKET	
	10	1	**9W-9135**	1	HUB-REACTION	
	11	1	**5D-0353**	8	BOLT-LOCKING (3/8-16X1 IN)	
	12	1	**8P-5698**	4	PLATE	
Y	13	1	*6T-9538*	1	SEGMENT GP-SPROCKET	639
	14	1	**9W-9132**	4	GEAR-PLANETARY (27 TEETH)	
	15	1	**9P-3657**	4	RING-LOCK	
	16	1	**1B-3978**	8	CUP-BEARING	
	17	1	**1B-3980**	8	CONE-BEARING	
	18	1	**110-2665**	4	SHAFT-PLANETARY	
	19	1	**9P-3801**	4	SHAFT-GOVERNOR CONTROL	
	20	1	**1L-7319**	8	CUP-BEARING	
	21	1	**1L-7203**	8	CONE-BEARING	
	22	1	**9W-9134**	4	GEAR-PLANETARY (25 TEETH)	
	23	1	**3T-3294**	1	CARRIER-PLANETARY	
	24	1	**8T-9400**	35	BOLT (7/8-9X2.5 IN)	
	25	1	**8C-6913**	35	WASHER-HARD (24X41.5X4MM THK)	
	26	1	**5D-7523**	1	SEAL-O-RING	
	27	1	**6V-1653**	4	SEAL-QUAD RING	
	28	1	**3P-8827**	4	PLATE	
	29	1	**030-8538**	8	BOLT (1/2-13X1.25 IN)	
	30	1	**9M-5894**	1	SEAL-O-RING	
	31	1	**3P-8820**	1	RING-THRUST	
	32	1	**3P-8822**	1	COVER	
	33	1	**110-2674**	1	RING-THRUST	
	34	1	**9W-9133**	1	GEAR-SUN (22 TEETH)	
	35	1	**2S-0613**	1	RING-RETAINING	
	36	1	**6V-3298**	1	PLUG-MAGNETIC	
	37	1	**2S-4078**	1	SEAL-O-RING	
	38	1	**9S-4185**	1	PLUG	
	39	1	**3K-0360**	1	SEAL-O-RING	
	40	1	**5F-7054**	1	SEAL-O-RING	
	41	1	**9P-3555**	1	GEAR-RING (74 TEETH)	
	42	1	**9W-9136**	1	CARRIER-PLANETARY	
	43	1	**6T-6566**	1	RING-RETAINING	
	44	1	**5P-8944**	1	RING-RETAINING	
	45	1	**110-2662**	1	GEAR-SUN (18 TEETH)	
	46	1	**110-2671**	1	RETAINER	
	47	1	**124-2375**	1	SEAL-LIP TYPE	
	48	1	**110-2670**	1	HOLDER-SEAL	
	49	1	**1D-4640**	30	BOLT (1-8X4.25 IN)	
	50	1	**5P-8250**	30	WASHER (28X49X5MM THK)	
	51	1	**147-0071**	1	BEARING-THRUST	
	52	1	**5K-7143**	16	BOLT-SELF LOCKING (1/2-13X1.5 IN)	

110-2780 FINAL DRIVE GP *(contd.)*

i01742691

NOTE	REF NO	GRAPHIC REF	PART NUMBER	QTY	PART NAME 1 2 3 4 5 6 (PRODUCT LEVEL)	SEE PAGE
	53	1	**6T-0609**	16	PIN	
	54	1	**5P-8245**	8	WASHER-HARD (13.5X25.5X3MM THK)	
	55	1	**7S-4326**	1	DOWEL	
	56	1	**8T-2502**	3	BOLT (3/8-16X1.125 IN)	
	57	1	**8T-4896**	3	WASHER-HARD (10.2X18.5X2.5MM THK)	
	58	1	**8E-3124**	1	RETAINER	
	59	1	**6F-8146**	1	SEAL-O-RING	
	60	1	**8T-8917**	4	BOLT (1/2-13X1.25 IN)	
	61	1	**8T-4223**	4	WASHER-HARD (13.5X25.5X3MM THK)	

R-REMFG PART MAY BE AVAILABLE
Y-SEPARATE ILLUSTRATION

110-2780 FINAL DRIVE GP *(contd.)* **i01742691**

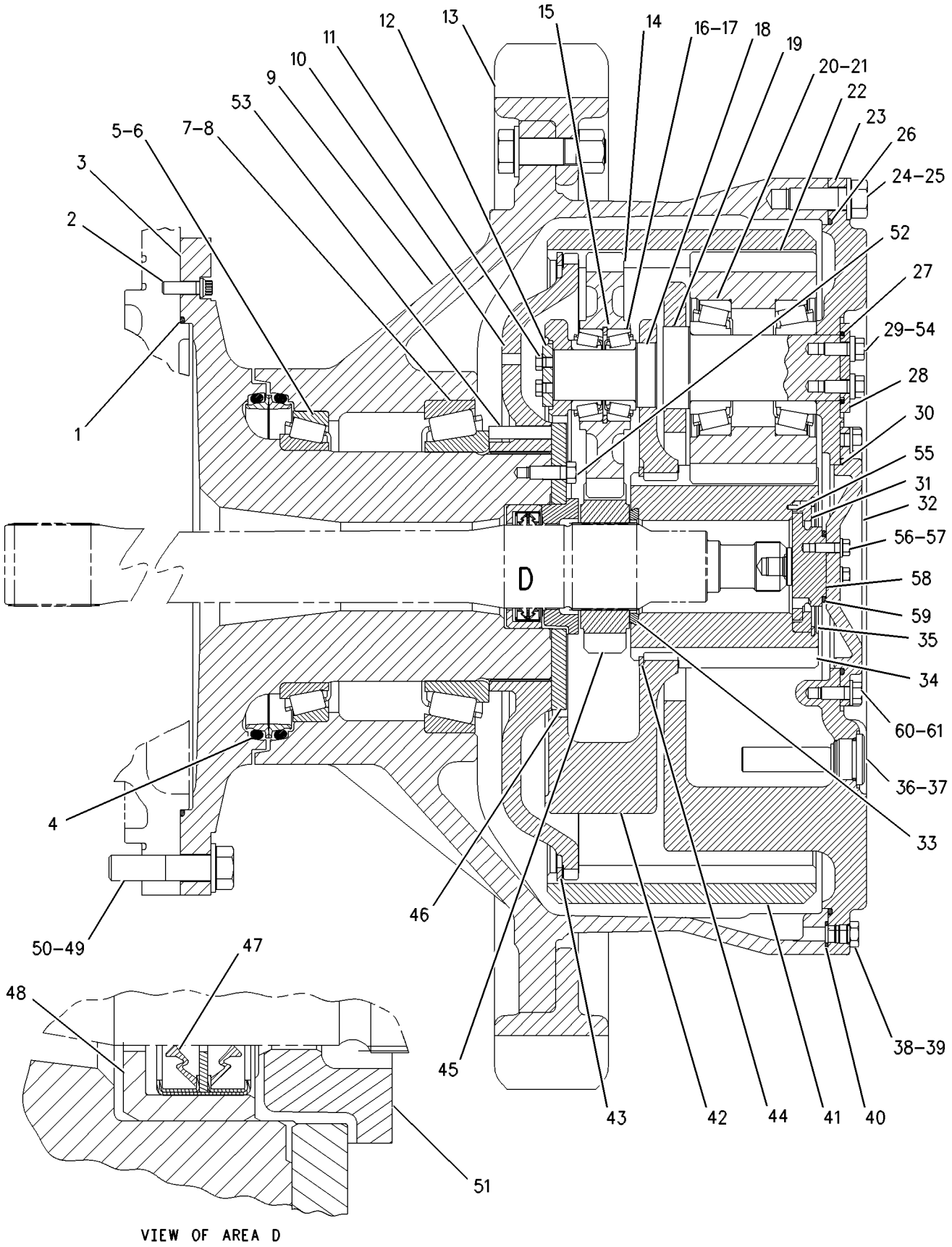

GRAPHIC #1 g00516326

MEMORANDA

POWER TRAIN

110-2780 FINAL DRIVE GP

S/N: 3KR1-UP
ARCTIC
PART OF 130-9719 ARCTIC AR
AN ATTACHMENT
TYPE 2

SMCS-4050 **i01742696**

NOTE	REF NO	GRAPHIC REF	PART NUMBER	QTY	PART NAME 1 2 3 4 5 6 (PRODUCT LEVEL)	SEE PAGE
	1	1	**8D-4771**	1	SEAL-O-RING	
	2	1	**8T-9412**	3	BOLT-12 POINT HEAD (1/2-13X1.5 IN)	
R	3	1	**110-2663**	1	HUB-SPINDLE	
	4	1	**118-2900**	1	SEAL GP-DUO-CONE	
		1	**3P-1849**	2	RING-SEALING	
	5	1	**126-0588**	1	CONE-SPECIAL TAPERED	
	6	1	**3D-9133**	1	CUP-BEARING	
	7	1	**6V-8281**	1	CUP-BEARING	
	8	1	**126-0587**	1	CONE-SPECIAL TAPERED	
	9	1	**110-2664**	1	HUB-SPROCKET	
	10	1	**9W-9135**	1	HUB-REACTION	
	11	1	**5D-0353**	8	BOLT-LOCKING (3/8-16X1 IN)	
	12	1	**8P-5698**	4	PLATE	
CY	13	1	*160-4928*	1	SEGMENT GP-SPROCKET	640
	14	1	**9W-9132**	4	GEAR-PLANETARY (27 TEETH)	
	15	1	**9P-3657**	4	RING-LOCK	
	16	1	**1B-3978**	8	CUP-BEARING	
	17	1	**1B-3980**	8	CONE-BEARING	
	18	1	**110-2665**	4	SHAFT-PLANETARY	
	19	1	**9P-3801**	4	SHAFT-GOVERNOR CONTROL	
	20	1	**1L-7319**	8	CUP-BEARING	
	21	1	**1L-7203**	8	CONE-BEARING	
	22	1	**9W-9134**	4	GEAR-PLANETARY (25 TEETH)	
	23	1	**3T-3294**	1	CARRIER-PLANETARY	
	24	1	**8T-9400**	35	BOLT (7/8-9X2.5 IN)	
	25	1	**8C-6913**	35	WASHER-HARD (24X41.5X4MM THK)	
	26	1	**5D-7523**	1	SEAL-O-RING	
	27	1	**6V-1653**	4	SEAL-QUAD RING	
	28	1	**3P-8827**	4	PLATE	
	29	1	**030-8538**	8	BOLT (1/2-13X1.25 IN)	
	30	1	**9M-5894**	1	SEAL-O-RING	
	31	1	**3P-8820**	1	RING-THRUST	
	32	1	**3P-8822**	1	COVER	
	33	1	**110-2674**	1	RING-THRUST	
	34	1	**9W-9133**	1	GEAR-SUN (22 TEETH)	
	35	1	**2S-0613**	1	RING-RETAINING	
	36	1	**6V-3298**	1	PLUG-MAGNETIC	
	37	1	**2S-4078**	1	SEAL-O-RING	
	38	1	**9S-4185**	1	PLUG	
	39	1	**3K-0360**	1	SEAL-O-RING	
	40	1	**5F-7054**	1	SEAL-O-RING	
	41	1	**9P-3555**	1	GEAR-RING (74 TEETH)	
	42	1	**9W-9136**	1	CARRIER-PLANETARY	
	43	1	**6T-6566**	1	RING-RETAINING	
	44	1	**5P-8944**	1	RING-RETAINING	
	45	1	**110-2662**	1	GEAR-SUN (18 TEETH)	
	46	1	**110-2671**	1	RETAINER	
	47	1	**124-2375**	1	SEAL-LIP TYPE	
	48	1	**110-2670**	1	HOLDER-SEAL	
	49	1	**1D-4640**	30	BOLT (1-8X4.25 IN)	
	50	1	**5P-8250**	30	WASHER (28X49X5MM THK)	
	51	1	**147-0071**	1	BEARING-THRUST	
	52	1	**5K-7143**	16	BOLT-SELF LOCKING (1/2-13X1.5 IN)	

110-2780 FINAL DRIVE GP *(contd.)*

i01742696

NOTE	REF NO	GRAPHIC REF	PART NUMBER	QTY	PART NAME 1 2 3 4 5 6 (PRODUCT LEVEL)	SEE PAGE
	53	1	**6T-0609**	16	PIN	
	54	1	**5P-8245**	8	WASHER-HARD (13.5X25.5X3MM THK)	
	55	1	**7S-4326**	1	DOWEL	
	56	1	**8T-2502**	3	BOLT (3/8-16X1.125 IN)	
	57	1	**8T-4896**	3	WASHER-HARD (10.2X18.5X2.5MM THK)	
	58	1	**8E-3124**	1	RETAINER	
	59	1	**6F-8146**	1	SEAL-O-RING	
	60	1	**8T-8917**	4	BOLT (1/2-13X1.25 IN)	
	61	1	**8T-4223**	4	WASHER-HARD (13.5X25.5X3MM THK)	

C-CHANGE FROM PREVIOUS TYPE
R-REMFG PART MAY BE AVAILABLE
Y-SEPARATE ILLUSTRATION

110-2780 FINAL DRIVE GP *(contd.)* **i01742696**

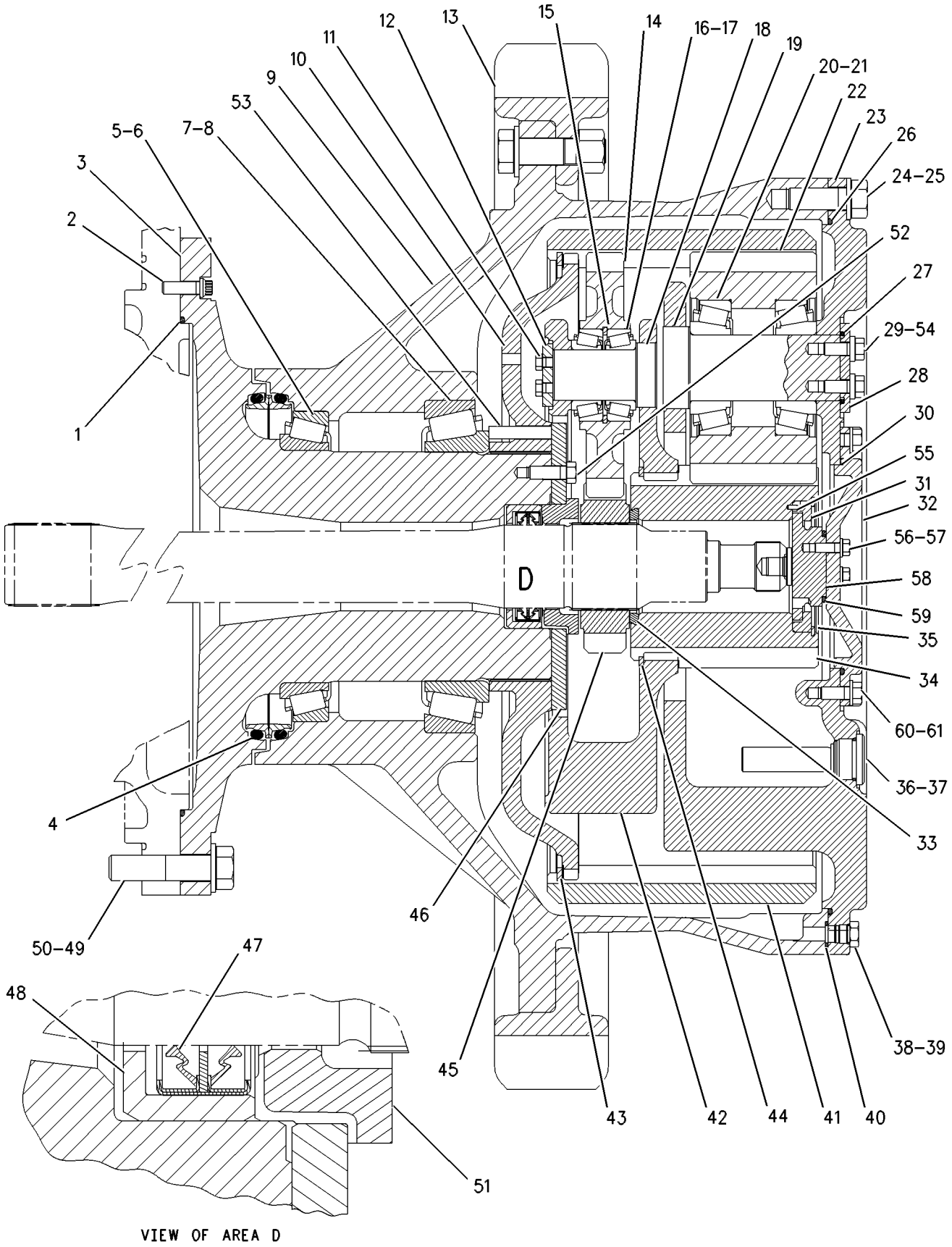

GRAPHIC #1 g00516326

MEMORANDA

POWER TRAIN

127-1806 FINAL DRIVE GP

S/N: 3KR1-UP
DUO-CONE GUARD
PART OF 127-1805 GUARD AR-FINAL DRIVE
AN ATTACHMENT

SMCS-4050 **i01742701**

NOTE	REF NO	GRAPHIC REF	PART NUMBER	QTY	PART NAME 1 2 3 4 5 6 (PRODUCT LEVEL)	SEE PAGE
	1	1	**8D-4771**	1	SEAL-O-RING	
	2	1	**8T-9412**	3	BOLT-12 POINT HEAD (1/2-13X1.5 IN)	
	3	1	**3B-8489**	1	FITTING-GREASE (1/8-27 THD)	
	4	1	**8T-4224**	16	WASHER-HARD (8.8X16X2MM THK)	
	5	1	**126-0588**	1	CONE-SPECIAL TAPERED	
	6	1	**3D-9133**	1	CUP-BEARING	
	7	1	**6V-8281**	1	CUP-BEARING	
	8	1	**126-0587**	1	CONE-SPECIAL TAPERED	
	9	1	**8C-6561**	16	BOLT (5/16-18X1.375 IN)	
	10	1	**9W-9135**	1	HUB-REACTION	
	11	1	**5D-0353**	8	BOLT-LOCKING (3/8-16X1 IN)	
	12	1	**8P-5698**	4	PLATE	
Y	13	1	*6T-9538*	1	SEGMENT GP-SPROCKET	639
	14	1	**9W-9132**	4	GEAR-PLANETARY (27 TEETH)	
	15	1	**9P-3657**	4	RING-LOCK	
	16	1	**1B-3978**	8	CUP-BEARING	
	17	1	**1B-3980**	8	CONE-BEARING	
	18	1	**110-2665**	4	SHAFT-PLANETARY	
	19	1	**9P-3801**	4	SHAFT-GOVERNOR CONTROL	
	20	1	**1L-7319**	8	CUP-BEARING	
	21	1	**1L-7203**	8	CONE-BEARING	
	22	1	**9W-9134**	4	GEAR-PLANETARY (25 TEETH)	
	23	1	**3T-3294**	1	CARRIER-PLANETARY	
	24	1	**8T-9400**	35	BOLT (7/8-9X2.5 IN)	
	25	1	**8C-6913**	35	WASHER-HARD (24X41.5X4MM THK)	
	26	1	**5D-7523**	1	SEAL-O-RING	
	27	1	**6V-1653**	4	SEAL-QUAD RING	
	28	1	**3P-8827**	4	PLATE	
	29	1	**030-8538**	8	BOLT (1/2-13X1.25 IN)	
	30	1	**9M-5894**	1	SEAL-O-RING	
	31	1	**3P-8820**	1	RING-THRUST	
	32	1	**3P-8822**	1	COVER	
	33	1	**110-2674**	1	RING-THRUST	
	34	1	**9W-9133**	1	GEAR-SUN (22 TEETH)	
	35	1	**2S-0613**	1	RING-RETAINING	
	36	1	**6V-3298**	1	PLUG-MAGNETIC	
	37	1	**2S-4078**	1	SEAL-O-RING	
	38	1	**9S-4185**	1	PLUG	
	39	1	**3K-0360**	1	SEAL-O-RING	
	40	1	**5F-7054**	1	SEAL-O-RING	
	41	1	**9P-3555**	1	GEAR-RING (74 TEETH)	
	42	1	**9W-9136**	1	CARRIER-PLANETARY	
	43	1	**6T-6566**	1	RING-RETAINING	
	44	1	**5P-8944**	1	RING-RETAINING	
	45	1	**110-2662**	1	GEAR-SUN (18 TEETH)	
	46	1	**110-2671**	1	RETAINER	
	47	1	**124-2375**	1	SEAL-LIP TYPE	
	48	1	**110-2670**	1	HOLDER-SEAL	
	49	1	**1D-4640**	30	BOLT (1-8X4.25 IN)	
	50	1	**5P-8250**	30	WASHER (28X49X5MM THK)	
	51	1	**147-0071**	1	BEARING-THRUST	
	52	1	**5K-7143**	16	BOLT-SELF LOCKING (1/2-13X1.5 IN)	
	53	1	**6T-0609**	16	PIN	
	54	1	**5P-8245**	8	WASHER-HARD (13.5X25.5X3MM THK)	

127-1806 FINAL DRIVE GP *(contd.)*

i01742701

NOTE	REF NO	GRAPHIC REF	PART NUMBER	QTY	PART NAME 1 2 3 4 5 6 (PRODUCT LEVEL)	SEE PAGE
	55	1	**7S-4326**	1	DOWEL	
	56	1	**8T-2502**	3	BOLT (3/8-16X1.125 IN)	
	57	1	**8T-4896**	3	WASHER-HARD (10.2X18.5X2.5MM THK)	
	58	1	**8E-3124**	1	RETAINER	
	59	1	**6F-8146**	1	SEAL-O-RING	
	60	1	**8T-8917**	4	BOLT (1/2-13X1.25 IN)	
	61	1	**8T-4223**	4	WASHER-HARD (13.5X25.5X3MM THK)	
	62	1	**5M-6214**	2	PLUG-PIPE	
	63	1	**1Q-3536**	1	SEAL	
	64	1	**126-2849**	1	HUB AS-SPROCKET	
	65	1	**126-2846**	1	RETAINER	
	66	1	**126-2847**	1	GUARD-DUO CONE SEAL	
	67	1	**127-1807**	1	SPINDLE AS	
	68	1	**1Q-3527**	1	GUARD	
	69	1	**130-6889**	1	SEAL GP-DUO-CONE	
	70	1	**127-0116**	2	RING-TORIC	
Z	71	1		2	SEAL-RING	

Y-SEPARATE ILLUSTRATION
Z-NOT SERVICED SEPARATELY

127-1806 FINAL DRIVE GP *(contd.)* **i01742701**

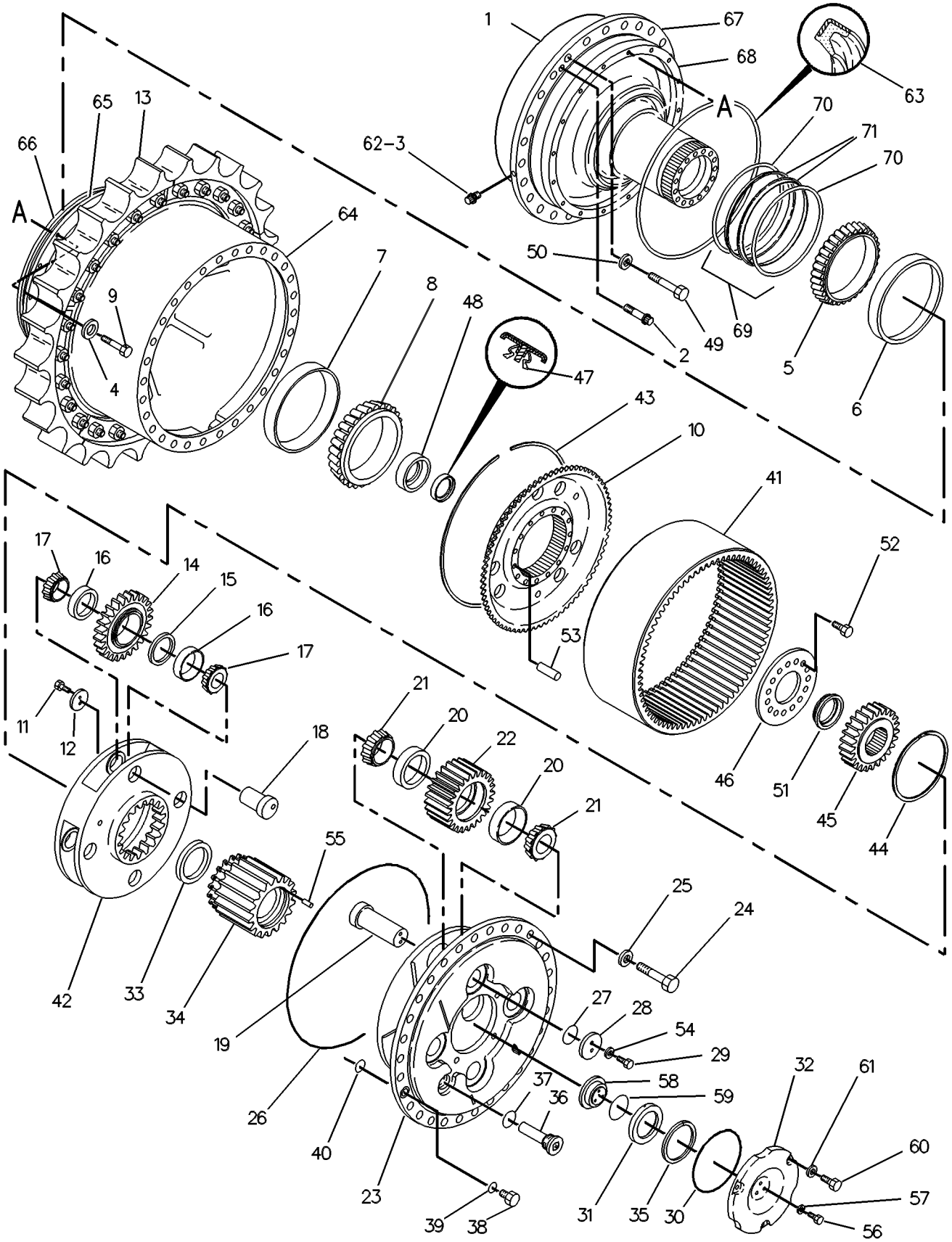

GRAPHIC #1 g00356316

MEMORANDA

143-7547 FINAL DRIVE GP—DU-CONE GUARD & PACKING SEAL

S/N: 3KR1-UP
PART OF 143-7543 GUARD AR-FINAL DRIVE
AN ATTACHMENT
TYPE 1

SMCS-4050 **i01742716**

NOTE	REF NO	GRAPHIC REF	PART NUMBER	QTY	PART NAME 1 2 3 4 5 6 (PRODUCT LEVEL)	SEE PAGE
	1	1,2	**8D-4771**	1	SEAL-O-RING	
	2	1,2	**8T-9412**	3	BOLT-12 POINT HEAD (1/2-13X1.5 IN)	
	3	1,2	**133-1121**	2	RETAINER	
	4	1,2	**8T-4224**	16	WASHER-HARD (8.8X16X2MM THK)	
	5	1,2	**126-0588**	1	CONE-SPECIAL TAPERED	
	6	1,2	**3D-9133**	1	CUP-BEARING	
	7	1,2	**6V-8281**	1	CUP-BEARING	
	8	1,2	**126-0587**	1	CONE-SPECIAL TAPERED	
	9	1,2	**8C-6561**	16	BOLT (5/16-18X1.375 IN)	
	10	1,2	**9W-9135**	1	HUB-REACTION	
	11	1,2	**5D-0353**	8	BOLT-LOCKING (3/8-16X1 IN)	
	12	1,2	**8P-5698**	4	PLATE	
Y	13	1,2	*6T-9538*	1	SEGMENT GP-SPROCKET	639
	14	1,2	**9W-9132**	4	GEAR-PLANETARY (27 TEETH)	
	15	1,2	**9P-3657**	4	RING-LOCK	
	16	1,2	**1B-3978**	8	CUP-BEARING	
	17	1,2	**1B-3980**	8	CONE-BEARING	
	18	1,2	**110-2665**	4	SHAFT-PLANETARY	
	19	1,2	**9P-3801**	4	SHAFT-GOVERNOR CONTROL	
	20	1,2	**1L-7319**	8	CUP-BEARING	
	21	1,2	**1L-7203**	8	CONE-BEARING	
	22	1,2	**9W-9134**	4	GEAR-PLANETARY (25 TEETH)	
	23	1,2	**3T-3294**	1	CARRIER-PLANETARY	
	24	1,2	**8T-9400**	35	BOLT (7/8-9X2.5 IN)	
	25	1,2	**8C-6913**	35	WASHER-HARD (24X41.5X4MM THK)	
	26	1,2	**5D-7523**	1	SEAL-O-RING	
	27	1,2	**6V-1653**	4	SEAL-QUAD RING	
	28	1,2	**3P-8827**	4	PLATE	
	29	1,2	**030-8538**	8	BOLT (1/2-13X1.25 IN)	
	30	1,2	**9M-5894**	1	SEAL-O-RING	
	31	1,2	**3P-8820**	1	RING-THRUST	
	32	1,2	**3P-8822**	1	COVER	
	33	1,2	**110-2674**	1	RING-THRUST	
	34	1,2	**9W-9133**	1	GEAR-SUN (22 TEETH)	
	35	1,2	**2S-0613**	1	RING-RETAINING	
	36	1,2	**6V-3298**	1	PLUG-MAGNETIC	
	37	1,2	**2S-4078**	1	SEAL-O-RING	
	38	1,2	**9S-4185**	1	PLUG	
	39	1,2	**3K-0360**	1	SEAL-O-RING	
	40	1,2	**5F-7054**	1	SEAL-O-RING	
	41	1,2	**9P-3555**	1	GEAR-RING (74 TEETH)	
	42	1,2	**9W-9136**	1	CARRIER-PLANETARY	
	43	1,2	**6T-6566**	1	RING-RETAINING	
	44	1,2	**5P-8944**	1	RING-RETAINING	
	45	1,2	**110-2662**	1	GEAR-SUN (18 TEETH)	
	46	1,2	**110-2671**	1	RETAINER	
	47	1,2	**124-2375**	1	SEAL-LIP TYPE	
	48	1,2	**110-2670**	1	HOLDER-SEAL	
	49	1,2	**1D-4640**	30	BOLT (1-8X4.25 IN)	
	50	1,2	**5P-8250**	30	WASHER (28X49X5MM THK)	
	51	1,2	**147-0071**	1	BEARING-THRUST	
	52	1,2	**5K-7143**	16	BOLT-SELF LOCKING (1/2-13X1.5 IN)	
	53	1,2	**6T-0609**	16	PIN	
	54	1,2	**5P-8245**	8	WASHER-HARD (13.5X25.5X3MM THK)	

143-7547 FINAL DRIVE GP *(contd.)*

i01742716

NOTE	REF NO	GRAPHIC REF	PART NUMBER	QTY	PART NAME 1 2 3 4 5 6 (PRODUCT LEVEL)	SEE PAGE
	55	1,2	**7S-4326**	1	DOWEL	
	56	1,2	**8T-2502**	3	BOLT (3/8-16X1.125 IN)	
	57	1,2	**8T-4896**	3	WASHER-HARD (10.2X18.5X2.5MM THK)	
	58	1,2	**8E-3124**	1	RETAINER	
	59	1,2	**6F-8146**	1	SEAL-O-RING	
	60	1,2	**8T-8917**	4	BOLT (1/2-13X1.25 IN)	
	61	1,2	**8T-4223**	4	WASHER-HARD (13.5X25.5X3MM THK)	
	62	1,2	**143-7549**	1	SPINDLE AS	
	63	1,2	**143-7550**	1	GUARD-DUO CONE SEAL	
	64	1,2	**143-7551**	1	HUB AS-SPROCKET	
	65	1,2	**143-7552**	1	GUARD	
	66	1,2	**133-1124**	2	SEAL	
	67	1,2	**130-6889**	1	SEAL GP-DUO-CONE	
	68	1,2	**127-0116**	2	RING-TORIC	
Z	69	1,2		2	SEAL-RING	

Y-SEPARATE ILLUSTRATION
Z-NOT SERVICED SEPARATELY

143-7547 FINAL DRIVE GP *(contd.)* **i01742716**

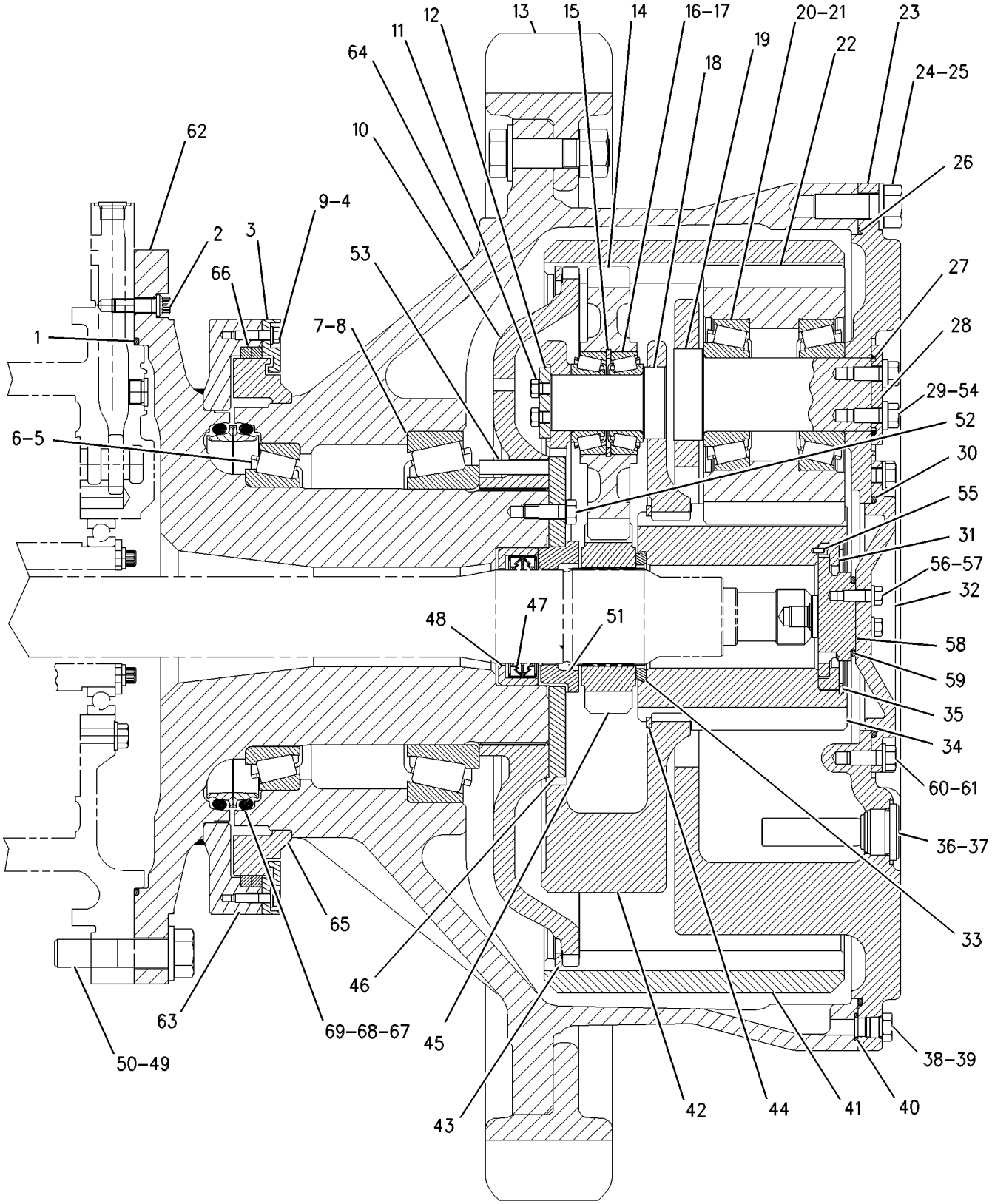

GRAPHIC #1 g00517024

143-7547 FINAL DRIVE GP *(contd.)* **i01742716**

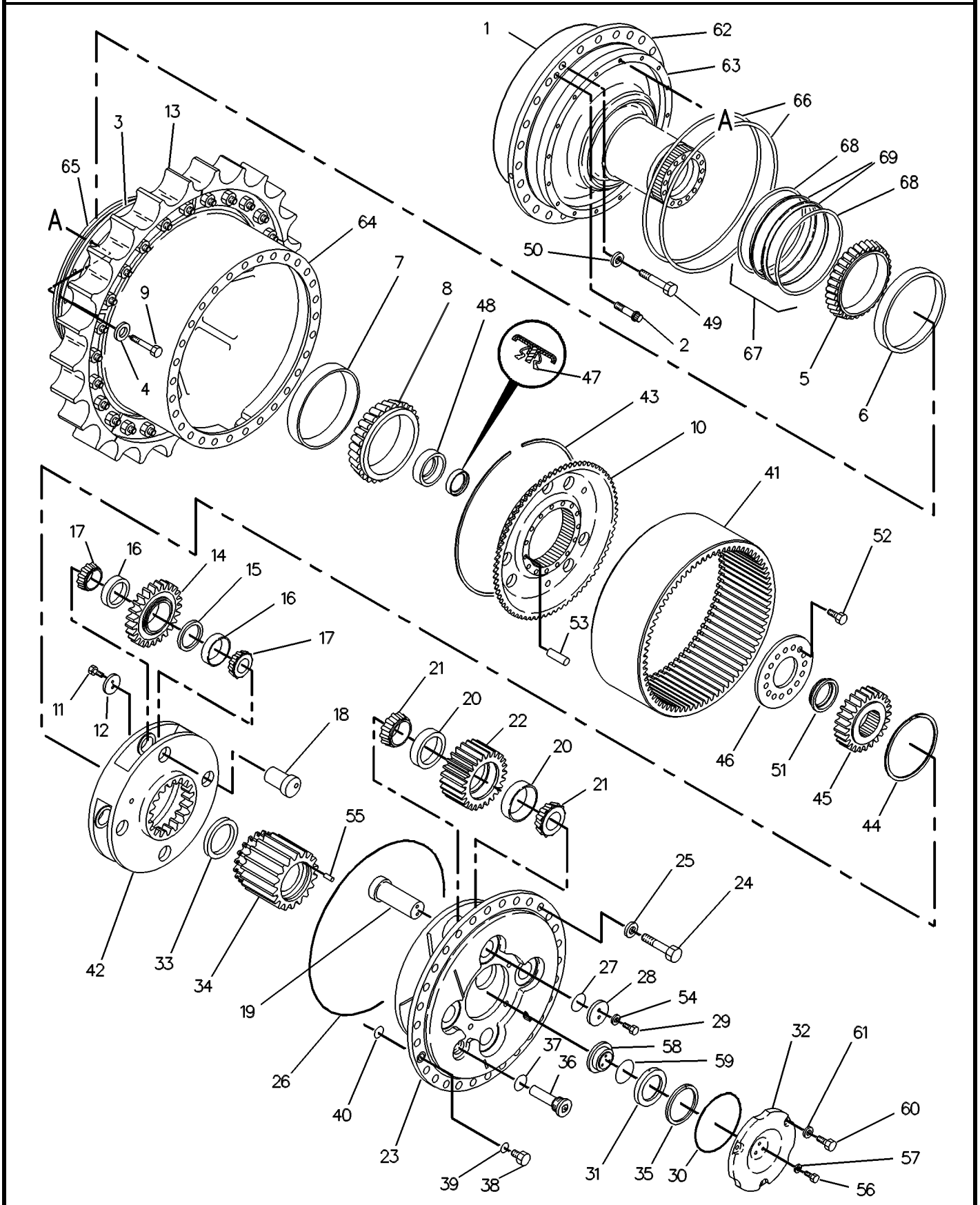

GRAPHIC #2 g00365900

POWER TRAIN

143-7547 FINAL DRIVE GP—DU-CONE GUARD & PACKING SEAL

S/N: 3KR1-UP
PART OF 143-7543 GUARD AR-FINAL DRIVE
AN ATTACHMENT
TYPE 2

SMCS-4050 **i01742718**

NOTE	REF NO	GRAPHIC REF	PART NUMBER	QTY	PART NAME 1 2 3 4 5 6 (PRODUCT LEVEL)	SEE PAGE
	1	1,2	**8D-4771**	1	SEAL-O-RING	
	2	1,2	**8T-9412**	3	BOLT-12 POINT HEAD (1/2-13X1.5 IN)	
	3	1,2	**133-1121**	2	RETAINER	
	4	1,2	**8T-4224**	16	WASHER-HARD (8.8X16X2MM THK)	
	5	1,2	**126-0588**	1	CONE-SPECIAL TAPERED	
	6	1,2	**3D-9133**	1	CUP-BEARING	
	7	1,2	**6V-8281**	1	CUP-BEARING	
	8	1,2	**126-0587**	1	CONE-SPECIAL TAPERED	
	9	1,2	**8C-6561**	16	BOLT (5/16-18X1.375 IN)	
	10	1,2	**9W-9135**	1	HUB-REACTION	
	11	1,2	**5D-0353**	8	BOLT-LOCKING (3/8-16X1 IN)	
	12	1,2	**8P-5698**	4	PLATE	
CY	13	1,2	*160-4928*	1	SEGMENT GP-SPROCKET	640
	14	1,2	**9W-9132**	4	GEAR-PLANETARY (27 TEETH)	
	15	1,2	**9P-3657**	4	RING-LOCK	
	16	1,2	**1B-3978**	8	CUP-BEARING	
	17	1,2	**1B-3980**	8	CONE-BEARING	
	18	1,2	**110-2665**	4	SHAFT-PLANETARY	
	19	1,2	**9P-3801**	4	SHAFT-GOVERNOR CONTROL	
	20	1,2	**1L-7319**	8	CUP-BEARING	
	21	1,2	**1L-7203**	8	CONE-BEARING	
	22	1,2	**9W-9134**	4	GEAR-PLANETARY (25 TEETH)	
	23	1,2	**3T-3294**	1	CARRIER-PLANETARY	
	24	1,2	**8T-9400**	35	BOLT (7/8-9X2.5 IN)	
	25	1,2	**8C-6913**	35	WASHER-HARD (24X41.5X4MM THK)	
	26	1,2	**5D-7523**	1	SEAL-O-RING	
	27	1,2	**6V-1653**	4	SEAL-QUAD RING	
	28	1,2	**3P-8827**	4	PLATE	
	29	1,2	**030-8538**	8	BOLT (1/2-13X1.25 IN)	
	30	1,2	**9M-5894**	1	SEAL-O-RING	
	31	1,2	**3P-8820**	1	RING-THRUST	
	32	1,2	**3P-8822**	1	COVER	
	33	1,2	**110-2674**	1	RING-THRUST	
	34	1,2	**9W-9133**	1	GEAR-SUN (22 TEETH)	
	35	1,2	**2S-0613**	1	RING-RETAINING	
	36	1,2	**6V-3298**	1	PLUG-MAGNETIC	
	37	1,2	**2S-4078**	1	SEAL-O-RING	
	38	1,2	**9S-4185**	1	PLUG	
	39	1,2	**3K-0360**	1	SEAL-O-RING	
	40	1,2	**5F-7054**	1	SEAL-O-RING	
	41	1,2	**9P-3555**	1	GEAR-RING (74 TEETH)	
	42	1,2	**9W-9136**	1	CARRIER-PLANETARY	
	43	1,2	**6T-6566**	1	RING-RETAINING	
	44	1,2	**5P-8944**	1	RING-RETAINING	
	45	1,2	**110-2662**	1	GEAR-SUN (18 TEETH)	
	46	1,2	**110-2671**	1	RETAINER	
	47	1,2	**124-2375**	1	SEAL-LIP TYPE	
	48	1,2	**110-2670**	1	HOLDER-SEAL	
	49	1,2	**1D-4640**	30	BOLT (1-8X4.25 IN)	
	50	1,2	**5P-8250**	30	WASHER (28X49X5MM THK)	
	51	1,2	**147-0071**	1	BEARING-THRUST	
	52	1,2	**5K-7143**	16	BOLT-SELF LOCKING (1/2-13X1.5 IN)	
	53	1,2	**6T-0609**	16	PIN	
	54	1,2	**5P-8245**	8	WASHER-HARD (13.5X25.5X3MM THK)	

143-7547 FINAL DRIVE GP *(contd.)*

i01742718

NOTE	REF NO	GRAPHIC REF	PART NUMBER	QTY	PART NAME 1 2 3 4 5 6 (PRODUCT LEVEL)	SEE PAGE
	55	1,2	**7S-4326**	1	DOWEL	
	56	1,2	**8T-2502**	3	BOLT (3/8-16X1.125 IN)	
	57	1,2	**8T-4896**	3	WASHER-HARD (10.2X18.5X2.5MM THK)	
	58	1,2	**8E-3124**	1	RETAINER	
	59	1,2	**6F-8146**	1	SEAL-O-RING	
	60	1,2	**8T-8917**	4	BOLT (1/2-13X1.25 IN)	
	61	1,2	**8T-4223**	4	WASHER-HARD (13.5X25.5X3MM THK)	
	62	1,2	**143-7549**	1	SPINDLE AS	
	63	1,2	**143-7550**	1	GUARD-DUO CONE SEAL	
	64	1,2	**143-7551**	1	HUB AS-SPROCKET	
	65	1,2	**143-7552**	1	GUARD	
	66	1,2	**133-1124**	2	SEAL	
	67	1,2	**130-6889**	1	SEAL GP-DUO-CONE	
	68	1,2	**127-0116**	2	RING-TORIC	

C-CHANGE FROM PREVIOUS TYPE
Y-SEPARATE ILLUSTRATION

143-7547 FINAL DRIVE GP *(contd.)* **i01742718**

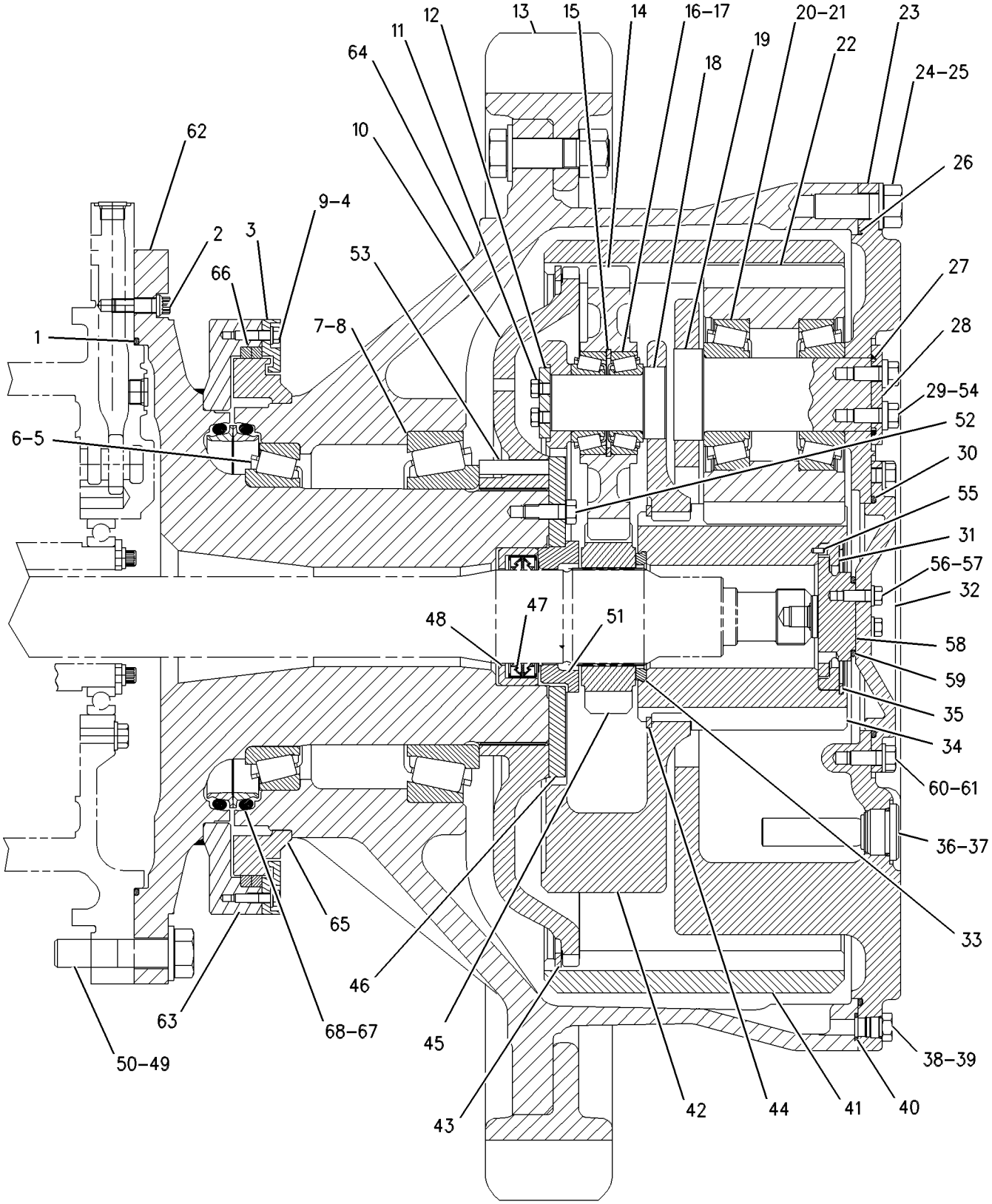

GRAPHIC #1 g00603588

143-7547 FINAL DRIVE GP *(contd.)* **i01742718**

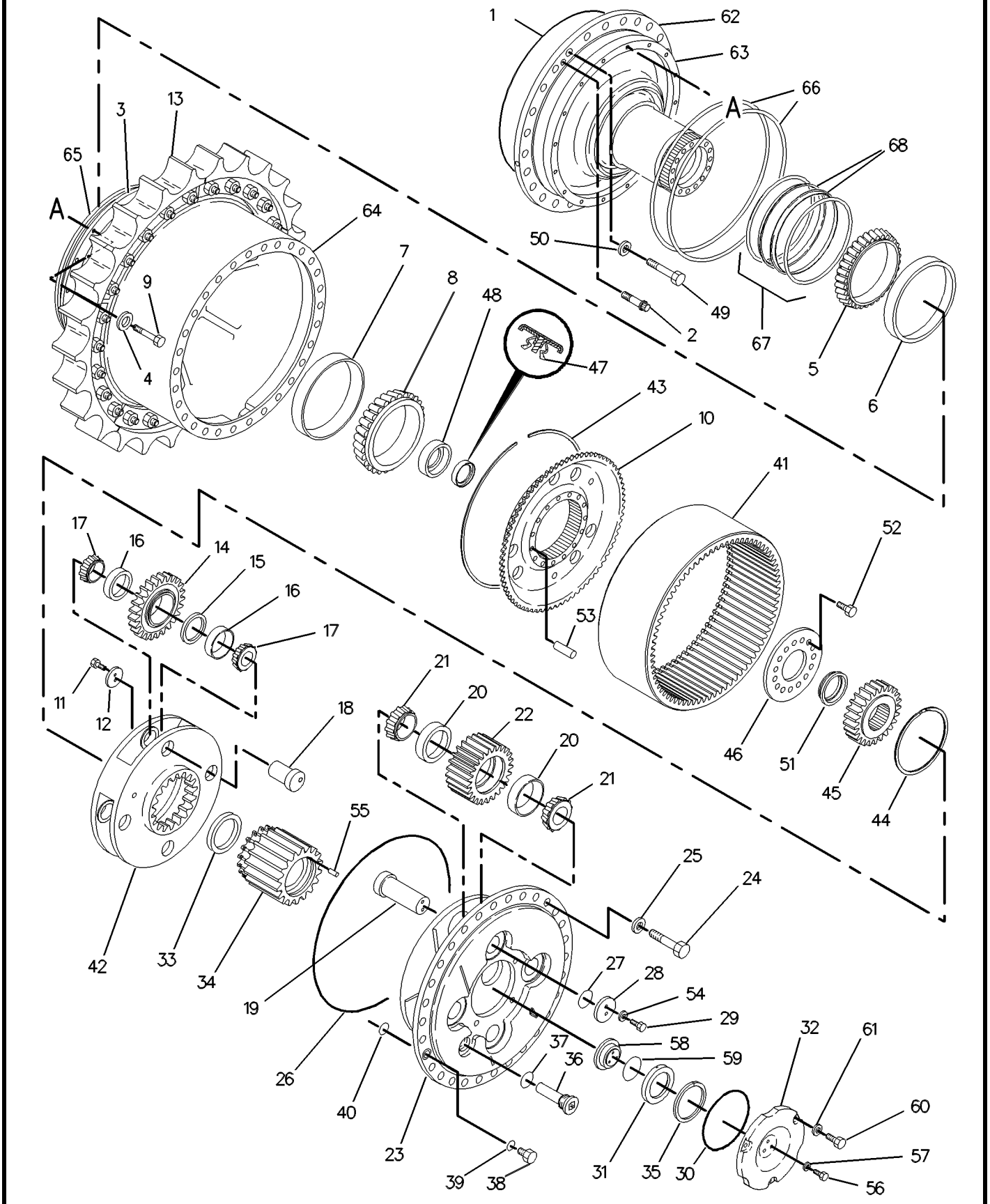

GRAPHIC #2 g00603592

POWER TRAIN

192-0722 FINAL DRIVE GP

S/N: 3KR1-UP
PART OF 143-7543 GUARD AR-FINAL DRIVE
AN ATTACHMENT

SMCS-4050 **i01742748**

NOTE	REF NO	GRAPHIC REF	PART NUMBER	QTY	PART NAME 1 2 3 4 5 6 (PRODUCT LEVEL)	SEE PAGE
	1	1	**8D-4771**	1	SEAL-O-RING	
	2	1	**8T-9412**	3	BOLT-12 POINT HEAD (1/2-13X1.5 IN)	
	3	1	**189-8874**	1	SPINDLE AS	
		1	**0R-8521**	1	HUB-SPROCKET	
					—OR—	
R		1	**110-2663**	1	HUB-SPINDLE	
		1	**189-3064**	1	GUARD	
	4	1	**130-6889**	1	SEAL GP-DUO-CONE	
		1	**127-0116**	2	RING-TORIC	
	5	1	**126-0588**	1	CONE-SPECIAL TAPERED	
	6	1	**3D-9133**	1	CUP-BEARING	
	7	1	**6V-8281**	1	CUP-BEARING	
	8	1	**126-0587**	1	CONE-SPECIAL TAPERED	
	9	1	**189-8869**	1	HUB AS-SPROCKET	
		1	**189-3065**	1	GUARD	
	10	1	**9W-9135**	1	HUB-REACTION	
	11	1	**5D-0353**	8	BOLT-LOCKING (3/8-16X1 IN)	
	12	1	**8P-5698**	4	PLATE	
Y	13	1	*160-4928*	1	SEGMENT GP-SPROCKET	640
	14	1	**9W-9132**	4	GEAR-PLANETARY (27 TEETH)	
	15	1	**9P-3657**	4	RING-LOCK	
	16	1	**1B-3978**	8	CUP-BEARING	
	17	1	**1B-3980**	8	CONE-BEARING	
	18	1	**110-2665**	4	SHAFT-PLANETARY	
	19	1	**9P-3801**	4	SHAFT-GOVERNOR CONTROL	
	20	1	**1L-7319**	8	CUP-BEARING	
	21	1	**1L-7203**	8	CONE-BEARING	
	22	1	**9W-9134**	4	GEAR-PLANETARY (25 TEETH)	
	23	1	**3T-3294**	1	CARRIER-PLANETARY	
	24	1	**8T-9400**	35	BOLT (7/8-9X2.5 IN)	
	25	1	**8C-6913**	35	WASHER-HARD (24X41.5X4MM THK)	
	26	1	**5D-7523**	1	SEAL-O-RING	
	27	1	**6V-1653**	4	SEAL-QUAD RING	
	28	1	**3P-8827**	4	PLATE	
	29	1	**030-8538**	8	BOLT (1/2-13X1.25 IN)	
	30	1	**9M-5894**	1	SEAL-O-RING	
	31	1	**3P-8820**	1	RING-THRUST	
	32	1	**3P-8822**	1	COVER	
	33	1	**110-2674**	1	RING-THRUST	
	34	1	**9W-9133**	1	GEAR-SUN (22 TEETH)	
	35	1	**2S-0613**	1	RING-RETAINING	
	36	1	**6V-3298**	1	PLUG-MAGNETIC	
	37	1	**2S-4078**	1	SEAL-O-RING	
	38	1	**9S-4185**	1	PLUG	
	39	1	**3K-0360**	1	SEAL-O-RING	
	40	1	**5F-7054**	1	SEAL-O-RING	
	41	1	**9P-3555**	1	GEAR-RING (74 TEETH)	
	42	1	**9W-9136**	1	CARRIER-PLANETARY	
	43	1	**6T-6566**	1	RING-RETAINING	
	44	1	**5P-8944**	1	RING-RETAINING	
	45	1	**110-2662**	1	GEAR-SUN (18 TEETH)	
	46	1	**110-2671**	1	RETAINER	
	47	1	**124-2375**	1	SEAL-LIP TYPE	
	48	1	**110-2670**	1	HOLDER-SEAL	
	49	1	**1D-4640**	30	BOLT (1-8X4.25 IN)	

192-0722 FINAL DRIVE GP *(contd.)* i01742748

NOTE	REF NO	GRAPHIC REF	PART NUMBER	QTY	PART NAME 1 2 3 4 5 6 (PRODUCT LEVEL)	SEE PAGE
	50	1	**5P-8250**	30	WASHER (28X49X5MM THK)	
	51	1	**147-0071**	1	BEARING-THRUST	
	52	1	**5K-7143**	16	BOLT-SELF LOCKING (1/2-13X1.5 IN)	
	53	1	**6T-0609**	16	PIN	
	54	1	**5P-8245**	8	WASHER-HARD (13.5X25.5X3MM THK)	
	55	1	**7S-4326**	1	DOWEL	
	56	1	**8T-2502**	3	BOLT (3/8-16X1.125 IN)	
	57	1	**8T-4896**	3	WASHER-HARD (10.2X18.5X2.5MM THK)	
	58	1	**8E-3124**	1	RETAINER	
	59	1	**6F-8146**	1	SEAL-O-RING	
	60	1	**8T-8917**	4	BOLT (1/2-13X1.25 IN)	
	61	1	**8T-4223**	4	WASHER-HARD (13.5X25.5X3MM THK)	
	62	1	**189-6244**	2	SEAL	
	63	1	**189-3063**	2	RETAINER	
	64	1	**8C-6561**	16	BOLT (5/16-18X1.375 IN)	
	65	1	**8T-4224**	16	WASHER-HARD (8.8X16X2MM THK)	

R-REMFG PART MAY BE AVAILABLE
Y-SEPARATE ILLUSTRATION

192-0722 FINAL DRIVE GP *(contd.)* **i01742748**

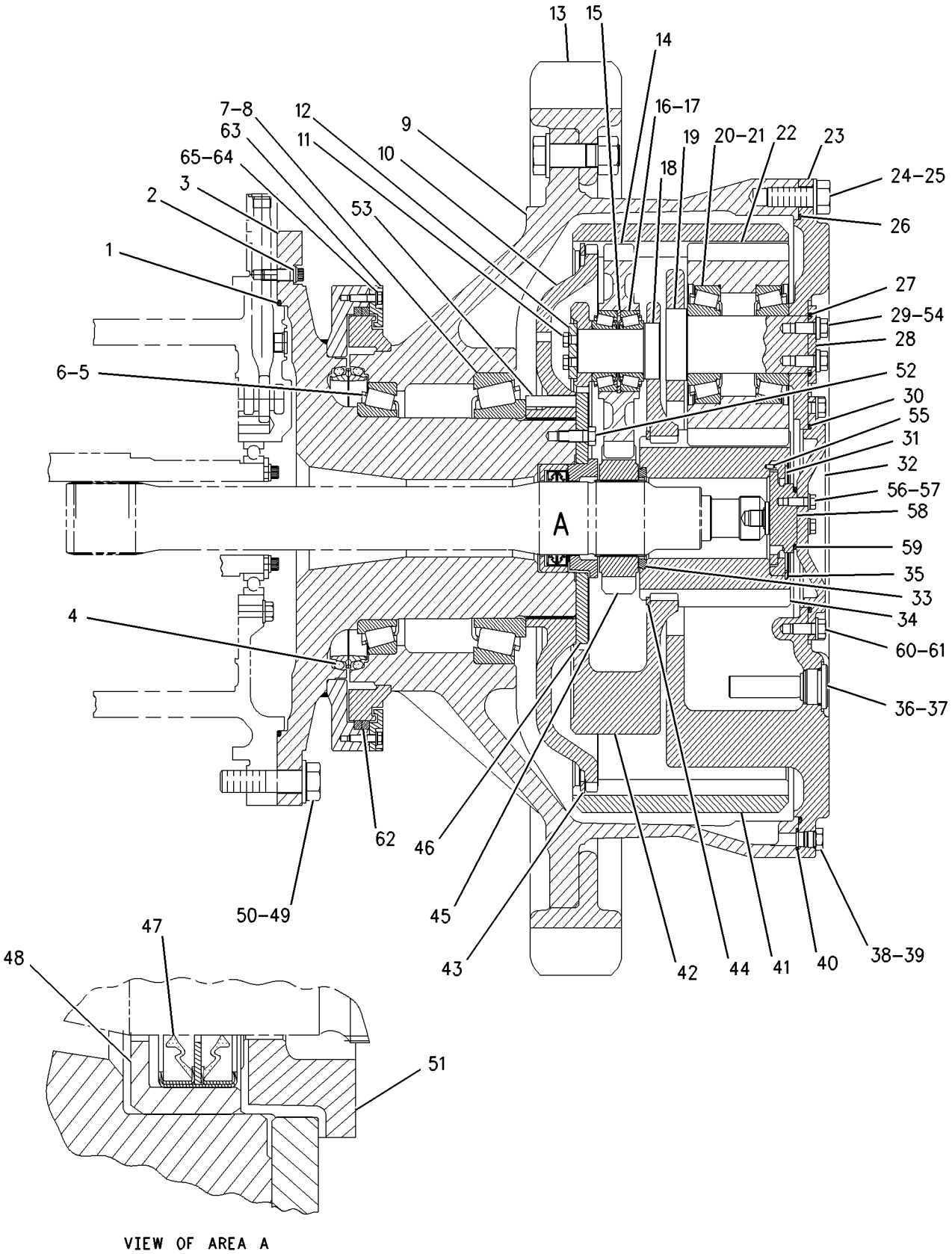

GRAPHIC #1 g00753252

MEMORANDA

POWER TRAIN

110-9292 GEAR GP-BEVEL & TRANSFER

S/N: 1LY1-UP

PART OF 110-9296 TRANSMISSION AR

SMCS-3011 **i01742754**

NOTE	REF NO	GRAPHIC REF	PART NUMBER	QTY	PART NAME 1 2 3 4 5 6 (PRODUCT LEVEL)	SEE PAGE
	1	1	**112-1289**	1	PLATE AS	
		1	**4B-9785**	2	BALL	
	2	1	**9X-8881**	15	BOLT (5/8-11X2.25 IN)	
	3	1	**5P-8247**	19	WASHER-HARD (17X32X3.5MM THK)	
	4	1	**5P-4143**	41	BOLT-LOCKING (1/2-13X2 IN)	
	5	1	**5P-8245**	41	WASHER-HARD (13.5X25.5X3MM THK)	
	6	1	**110-9302**	1	CAGE-BEARING	
	7	1	**110-9303**	1	CAGE-BEARING	
	8	1	**110-9309**	1	BRACKET AS	
	9	1	**9X-8874**	2	BOLT (1/2-13X3 IN)	
	10	1	**7D-1649**	2	WASHER-HARD (13.5X32X5MM THK)	
	11	1	**9G-3464**	2	BUSHING-TERMINAL	
	12	1	**6V-0458**	1	CUP-BEARING	
	13	1	**6V-0457**	1	CONE-BEARING	
	14	1	**110-9301**	1	PINION-BEVEL (23 TEETH)	
	15	1	**108-6044**	1	GEAR-TRANSFER (37 TEETH)	
B	16	1	**7G-2325**	4	SHIM PACK (INCLUDES 14 SHIMS)	
	17	1	**5K-3931**	1	CUP-BEARING	
	18	1	**5K-3932**	1	CONE-BEARING	
	19	1	**032-0676**	1	BOLT-LOCKING	
	20	1	**114-0325**	1	RETAINER	
	21	1	**5D-6659**	1	RACE & ROLLER AS	
	22	1	**108-6043**	1	GEAR-TRANSFER (32 TEETH)	
	23	1	**6Y-2546**	1	CONE-BEARING	
	24	1	**6Y-2547**	1	CUP-BEARING	
	25	1	**1M-6573**	1	CUP-BEARING	
	26	1	**9M-2744**	1	CONE-BEARING	
	27	1	**8C-3075**	1	SEAL-LIP	
	28	1	**110-9306**	1	GEAR-BEVEL (29 TEETH)	
	29	1	**110-9307**	1	CAGE-BEARING	
	30	1	**9W-4163**	1	RACE-ROLLER BEARING	
	31	1	**9W-4162**	1	BEARING	
	32	1	**5P-1981**	1	RING-RETAINING	
	33	1	**9S-1367**	10	BOLT (1-14X3.75 IN)	
	34	1	**2K-7471**	10	LOCKNUT	
	35	1	**110-9305**	1	SHAFT-BEVEL GEAR	
B	36	1	**3T-4391**	2	SHIM PACK (INCLUDES 18 SHIMS)	
	37	1	**110-9304**	1	CAGE-BEARING	
	38	1	**112-7317**	1	BEARING AS	
	39	1	**121-9871**	1	NUT-BEARING	
	40	1	**122-4575**	1	LOCKWASHER-BEARING	
	41	1	**122-0333**	1	WASHER-BEARING	
	42	1	**9X-8883**	4	BOLT (5/8-11X2.75 IN)	
	43	1	**1S-8385**	1	RING-RETAINING	

B-USE AS REQUIRED

110-9292 **GEAR GP-BEVEL & TRANSFER** *(contd.)* **i01742754**

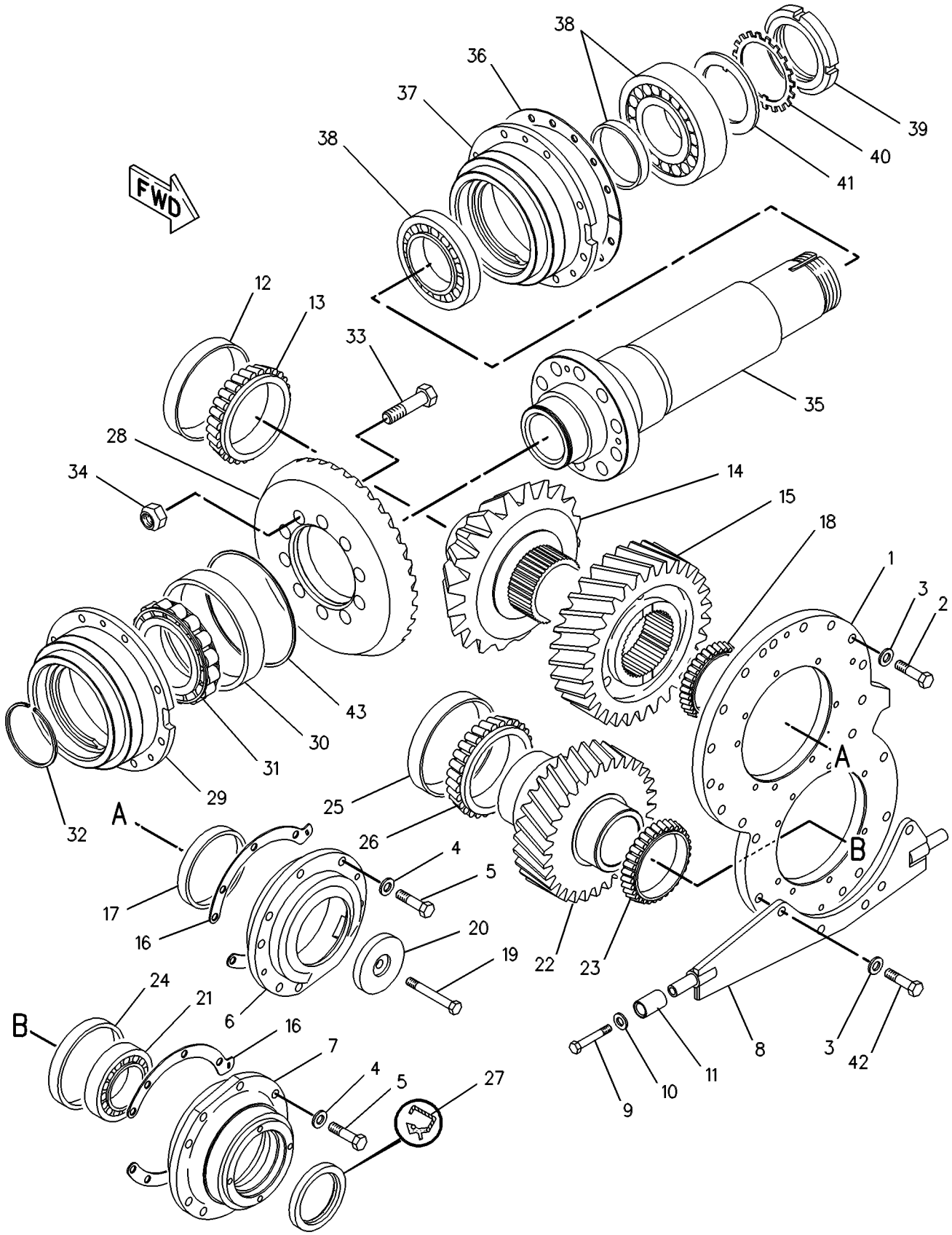

GRAPHIC #1 g00252764

POWER TRAIN

8E-3129 GUARD GP-DRIVE SHAFT

S/N: 3KR1-UP

SMCS-7153 **i01742792**

NOTE	REF NO	GRAPHIC REF	PART NUMBER	QTY	PART NAME 1 2 3 4 5 6 (PRODUCT LEVEL)	SEE PAGE
	1	1	**5M-3062**	2	BOLT (3/8-16X0.75 IN)	
	2	1	**8T-4896**	4	WASHER-HARD (10.2X18.5X2.5MM THK)	
	3	1	**5P-1075**	8	WASHER-HARD (10.2X22.5X3MM THK)	
	4	1	**136-2076**	1	GUARD AS	
		1	**1F-0750**	2	NUT-WELD (3/8-16 THD)	
	5	1	**4L-6454**	4	BOLT (3/8-16X1 IN)	
	6	1	**6T-9180**	2	BRACKET	
	7	1	**7G-4873**	2	GUARD AS	
	8	1	**136-2077**	1	GUARD AS	
		1	**1F-0750**	6	NUT-WELD (3/8-16 THD)	
	9	1	**5C-6565**	6	BOLT (1/2-13X1.125 IN)	
	10	1	**8T-4223**	6	WASHER-HARD (13.5X25.5X3MM THK)	
	11	1	**5S-7379**	5	BOLT (3/8-16X0.875 IN)	
	12	1	**8T-9377**	1	BOLT (3/8-16X2.25 IN)	

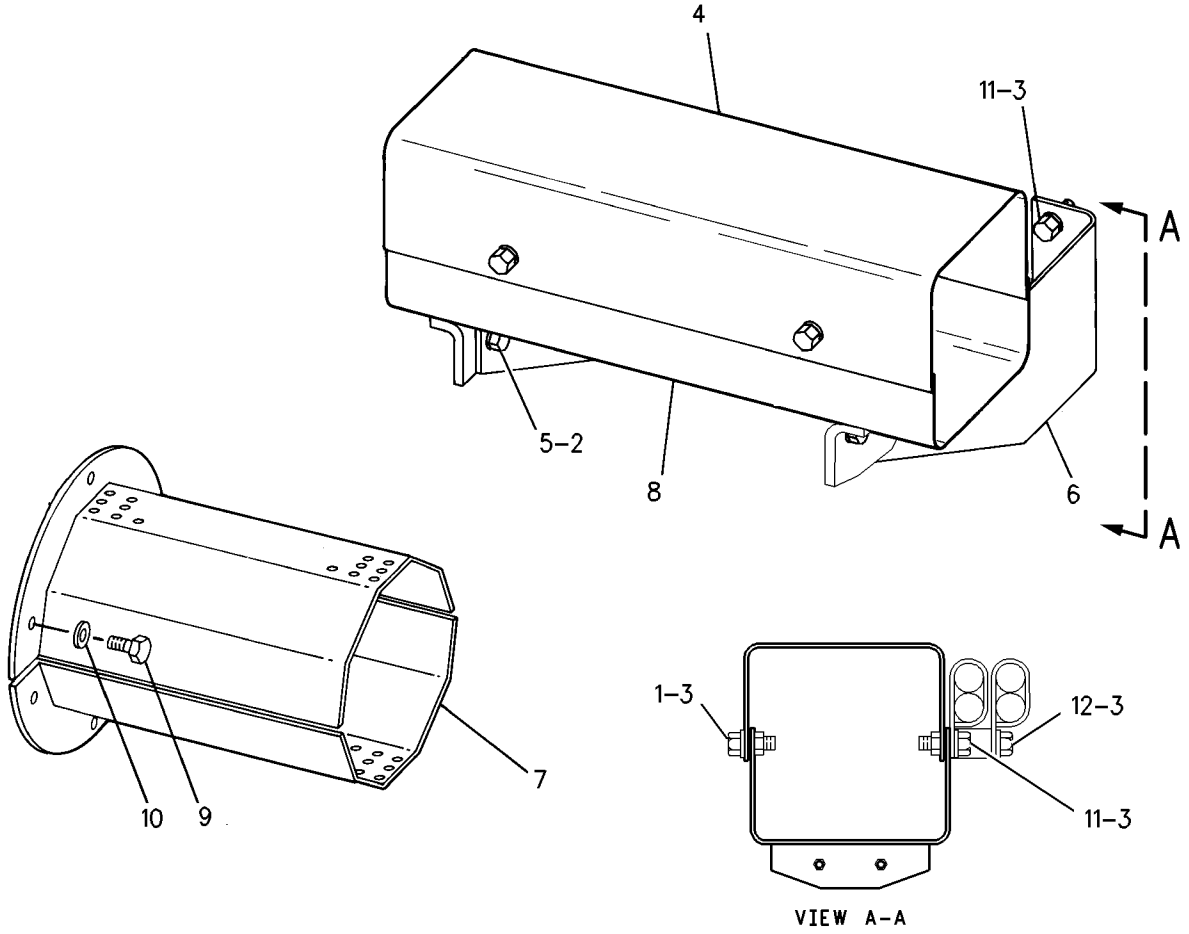

GRAPHIC #1 g00694417

MEMORANDA

POWER TRAIN

118-2486 LINES GP-POWER TRAIN OIL

S/N: 3KR1-619

SMCS-3016 **i01742795**

NOTE	REF NO	GRAPHIC REF	PART NUMBER	QTY	PART NAME 1 2 3 4 5 6 (PRODUCT LEVEL)	SEE PAGE
	1	1	**2M-1538**	3	STUD-TAPERLOCK	
	2	1	**8T-4896**	14	WASHER-HARD (10.2X18.5X2.5MM THK)	
	3	1	**8T-4835**	4	BOLT (1/2-13X2 IN)	
	4	1	**8T-4223**	4	WASHER-HARD (13.5X25.5X3MM THK)	
	5	1	**8T-8919**	4	BOLT (1/2-13X1.75 IN)	
	6	1	**1P-5763**	2	FLANGE-HALF	
	7	1	**1P-3708**	1	SEAL-RECTANGULAR	
	8	1	**8T-7971**	4	WASHER-HARD (13.5X25.5X5MM THK)	
Y	9	1	*132-3629*	1	PUMP GP-GEAR	637
		1	**8C-3077**	1	SEAL	
		1	**8M-4992**	1	SEAL-O-RING	
		1	**2D-8009**	1	SEAL-O-RING	
	10	1	**1M-3464**	2	CLIP	
	11	1	**6Y-1101**	1	TUBE AS	
	12	1	**6Y-2573**	1	GAUGE AS	
	13	1	**6N-2985**	1	CAP AS-FILLER	
	14	1	**9M-5732**	1	RIVET-POP	
		1	**4B-4274**	1	WASHER (5.5X13X1.2MM THK)	
	15	1	**9X-7674**	2	SEAL-RECTANGULAR	
	16	1	**3T-2710**	1	FLANGE	
	17	1	**2H-6184**	1	SEAL-O-RING	
	18	1	**7G-4993**	1	TUBE	
	19	1	**5P-1076**	1	WASHER-HARD (13.5X30X4MM THK)	
	20	1	**5P-7469**	2	CLIP (TAB)	
		1	**5P-7468**	2	CLIP (SLOT)	
	21	1	**4L-6454**	1	BOLT (3/8-16X1 IN)	
	22	1	**7G-6767**	1	GUIDE AS	
		1	**3K-0846**	1	NUT-FLARED	
	23	1	**5M-2894**	3	WASHER-HARD (10.2X18.5X2.5MM THK)	
	24	1	**3S-3875**	1	SCREEN-SUCTION	
	25	1	**1P-4576**	4	FLANGE-HALF	
	26	1	**5S-7382**	10	BOLT (3/8-16X1.375 IN)	
I	27	1	**6Y-1102**	1	HOSE AS	
	28	1	**8T-8920**	1	BOLT (1/2-13X3.25 IN)	
		1	**9V-0999**	1	SPACER (13.8X30X50MM THK)	
	29	1	**1H-8128**	2	SEAL-O-RING	
	30	1	**4J-5267**	2	SEAL-O-RING	
	31	1	**5K-9238**	1	CONNECTOR-FLARED	
	32	1	**5P-1075**	4	WASHER-HARD (10.2X22.5X3MM THK)	
	33	1	**134-8079**	1	HOUSING	
	34	1	**3S-3439**	1	COVER-TOP	
	35	1	**9B-7237**	6	BOLT (3/8-16X1.25 IN)	
	36	1	**7M-8485**	2	SEAL-O-RING	
	37	1	**6V-8716**	1	CONNECTOR	
	38	1	**6V-9746**	2	SEAL-O-RING	
	39	1	**9S-4181**	1	PLUG	
I	40	1	**6Y-4056**	1	HOSE AS	
	41	1	**6V-8801**	4	NUT (3/8-16 THD)	
	42	2	**6V-0852**	2	CAP-DUST	
		2	**6V-3965**	2	FITTING AS	
	43	2	**8T-1674**	1	TEE	
	44	2	**3D-2824**	2	SEAL-O-RING	
	45	2	**6V-8714**	1	CONNECTOR	
I	46	2	**6Y-2549**	1	HOSE AS	
		2	**5K-9090**	2	SEAL-O-RING	
	47	2	**8M-4390**	1	SEAL-O-RING	
	48	2	**8T-8919**	8	BOLT (1/2-13X1.75 IN) (1/2-13X1.50IN)	

118-2486 LINES GP-POWER TRAIN OIL *(contd.)* i01742795

NOTE	REF NO	GRAPHIC REF	PART NUMBER	QTY	PART NAME 1 2 3 4 5 6 (PRODUCT LEVEL)	SEE PAGE
	49	2	**4J-0524**	3	SEAL-O-RING	
I	50	2	**8E-1290**	1	HOSE AS	
	51	2	**9G-5127**	1	BREATHER (PRESSURE RELIEF)	
		2	**5P-3501**	1	ADAPTER	
	52	2	**109-0076**	2	SEAL-O-RING	
	53	2	**7X-3392**	8	WASHER-HARD (13.5X22.5X3MM THK)	
Y	54	2	**117-1034**	1	VALVE GP-RELIEF	666
	55	2	**4J-0523**	1	SEAL-O-RING	
	56	2	**8T-4896**	5	WASHER-HARD (10.2X18.5X2.5MM THK)	
	57	2	**6V-8801**	1	NUT (3/8-16 THD)	
		2	**7C-8246**	1	SPACER (10.5X20X24MM THK)	
	58	2	**8T-4223**	31	WASHER-HARD (13.5X25.5X3MM THK)	
	59	2	**7X-0290**	3	BOLT (3/8-16X3.50 IN)	
	60	2	**8M-8157**	1	SEAL-O-RING	
	61	2	**8T-4835**	8	BOLT (1/2-13X2 IN)	
	62	2	**1P-4582**	6	FLANGE-HALF	
	63	2	**8T-9377**	1	BOLT (3/8-16X2.25 IN)	
	64	2	**116-7877**	1	TUBE AS	
	65	2	**5P-2566**	16	BOLT (1/2-13X1.5 IN)	
	66	2	**4D-6763**	2	ELBOW	
	67	2	**116-7876**	1	TUBE AS	
	68	2	**8T-9384**	1	BOLT (1/2-13X0.875 IN)	
	69	2	**6F-0295**	1	CLIP	
		2	**126-3767**	1	PLATE AS	
		2	**1F-0748**	1	NUT-WELD (1/2-13 THD)	
	70	2	**3J-1907**	3	SEAL-O-RING	
	71	2	**1P-4579**	6	FLANGE-HALF	
	72	2	**7D-4069**	2	CLAMP	
I	73	2	**8E-1291**	1	HOSE AS	
	74	2	**4J-0528**	4	SEAL-O-RING	
	75	2	**2P-8421**	1	ADAPTER-O-RING	
	76	2	**117-7092**	1	MANIFOLD	
		2	**9F-7283**	2	SEAL-O-RING	
	77	2	**7X-0326**	6	BOLT (1/2-13X3 IN)	
	78	2	**7M-8485**	2	SEAL-O-RING	
	79	2	**8T-4149**	1	ELBOW	
	80	3	**6V-0852**	2	CAP-DUST	
		3	**6V-3965**	2	FITTING AS	
		3	**3J-1907**	2	SEAL-O-RING	
Y	81	3	*133-1280*	2	FILTER GP-OIL	552
	82	3	**3P-1932**	1	ADAPTER	
		3	**3K-0360**	1	SEAL-O-RING	
	83	3	**8C-3446**	1	VALVE GP-FLUID SAMPLING	
		3	**3J-7354**	1	SEAL-O-RING	
		3	**8C-3447**	1	CAP-DUST	
	84	3	**6L-1651**	2	SEAL-O-RING	
	85	3	**5H-7153**	2	SEAL-O-RING	
	86	3	**9M-9647**	2	SEAL-O-RING	

I-SEE HOSE FABRICATION GUIDE
Y-SEPARATE ILLUSTRATION

118-2486 **LINES GP-POWER TRAIN OIL** *(contd.)* **i01742795**

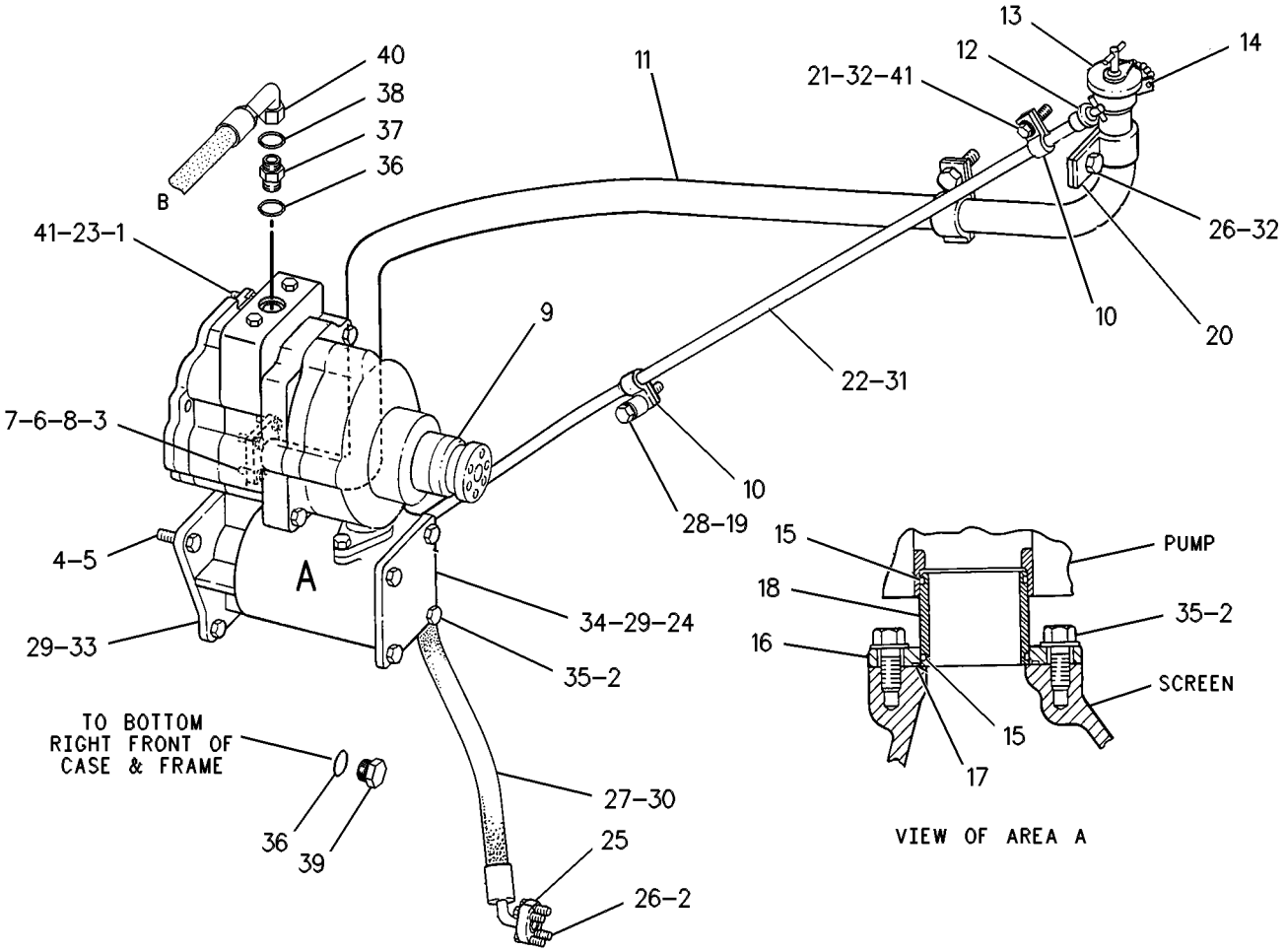

GRAPHIC #1 g00364300

118-2486 **LINES GP-POWER TRAIN OIL** *(contd.)* **i01742795**

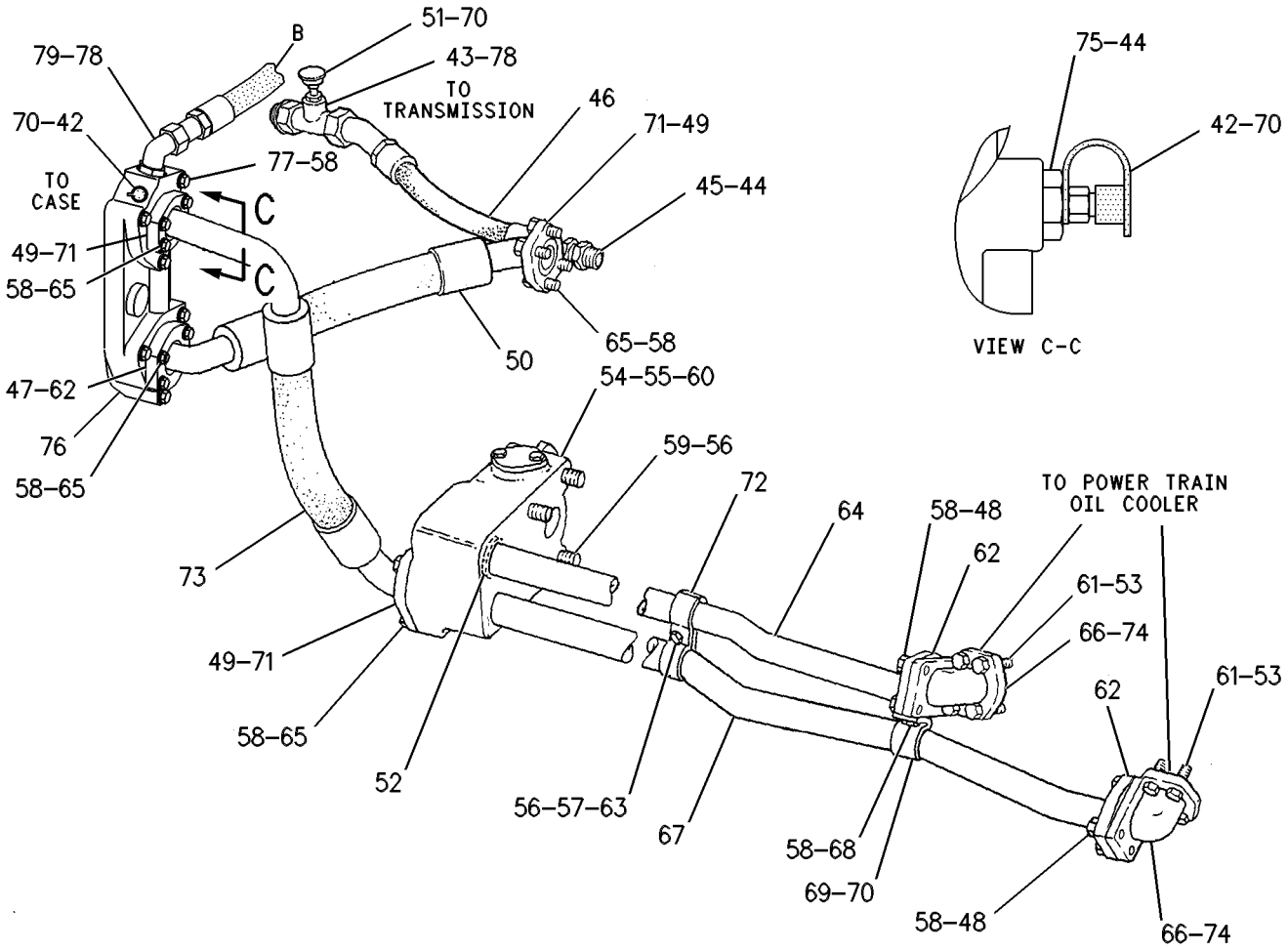

GRAPHIC #2 g00387664

118-2486 **LINES GP-POWER TRAIN OIL** *(contd.)* **i01742795**

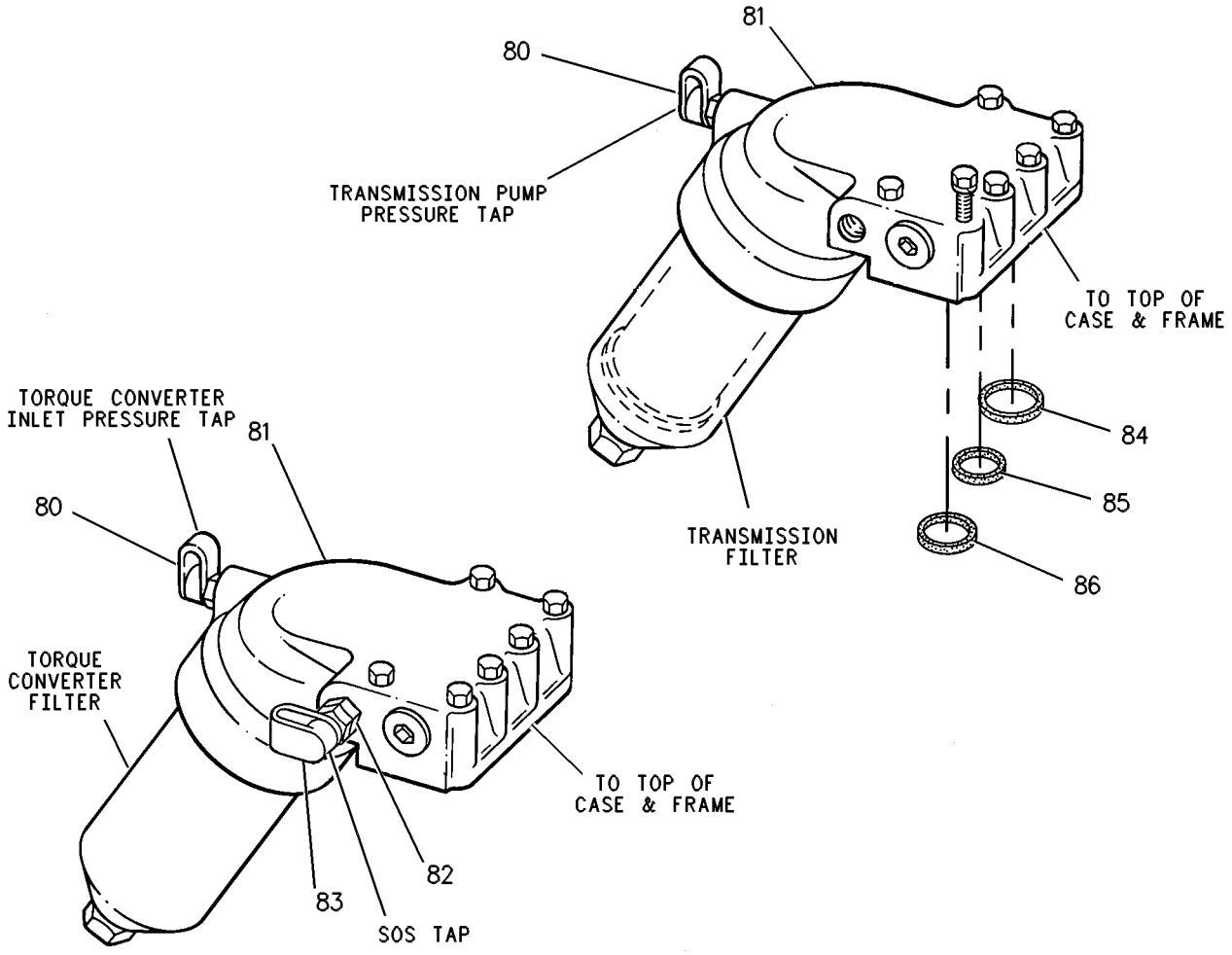

GRAPHIC #3 g00387665

MEMORANDA

POWER TRAIN

118-2486 LINES GP-POWER TRAIN OIL

S/N: 3KR620-973

SMCS-3016 **i01749557**

NOTE	REF NO	GRAPHIC REF	PART NUMBER	QTY	PART NAME 1 2 3 4 5 6 (PRODUCT LEVEL)	SEE PAGE
	1	1	**2M-1538**	3	STUD-TAPERLOCK	
	2	1	**8T-4896**	14	WASHER-HARD (10.2X18.5X2.5MM THK)	
	3	1	**8T-4835**	4	BOLT (1/2-13X2 IN)	
	4	1	**8T-4223**	4	WASHER-HARD (13.5X25.5X3MM THK)	
	5	1	**8T-8919**	4	BOLT (1/2-13X1.75 IN)	
	6	1	**1P-5763**	2	FLANGE-HALF	
	7	1	**1P-3708**	1	SEAL-RECTANGULAR	
	8	1	**8T-7971**	4	WASHER-HARD (13.5X25.5X5MM THK)	
Y	9	1	*132-3629*	1	PUMP GP-GEAR	637
		1	**8C-3077**	1	SEAL	
		1	**8M-4992**	1	SEAL-O-RING	
		1	**2D-8009**	1	SEAL-O-RING	
	10	1	**1M-3464**	2	CLIP	
	11	1	**6Y-1101**	1	TUBE AS	
	12	1	**6Y-2573**	1	GAUGE AS	
	13	1	**6N-2985**	1	CAP AS-FILLER	
	14	1	**9M-5732**	1	RIVET-POP	
		1	**4B-4274**	1	WASHER (5.5X13X1.2MM THK)	
	15	1	**9X-7674**	2	SEAL-RECTANGULAR	
	16	1	**3T-2710**	1	FLANGE	
	17	1	**2H-6184**	1	SEAL-O-RING	
	18	1	**7G-4993**	1	TUBE	
	19	1	**5P-1076**	1	WASHER-HARD (13.5X30X4MM THK)	
	20	1	**5P-7469**	2	CLIP (TAB)	
		1	**5P-7468**	2	CLIP (SLOT)	
	21	1	**4L-6454**	1	BOLT (3/8-16X1 IN)	
	22	1	**7G-6767**	1	GUIDE AS	
		1	**3K-0846**	1	NUT-FLARED	
	23	1	**5M-2894**	3	WASHER-HARD (10.2X18.5X2.5MM THK)	
	24	1	**3S-3875**	1	SCREEN-SUCTION	
	25	1	**1P-4576**	4	FLANGE-HALF	
	26	1	**5S-7382**	10	BOLT (3/8-16X1.375 IN)	
I	27	1	**6Y-1102**	1	HOSE AS	
	28	1	**8T-8920**	1	BOLT (1/2-13X3.25 IN)	
		1	**9V-0999**	1	SPACER (13.8X30X50MM THK)	
	29	1	**1H-8128**	2	SEAL-O-RING	
	30	1	**4J-5267**	2	SEAL-O-RING	
	31	1	**5K-9238**	1	CONNECTOR-FLARED	
	32	1	**5P-1075**	4	WASHER-HARD (10.2X22.5X3MM THK)	
	33	1	**134-8079**	1	HOUSING	
	34	1	**3S-3439**	1	COVER-TOP	
	35	1	**9B-7237**	6	BOLT (3/8-16X1.25 IN)	
	36	1	**7M-8485**	2	SEAL-O-RING	
	37	1	**6V-8716**	1	CONNECTOR	
	38	1	**6V-9746**	2	SEAL-O-RING	
	39	1	**9S-4181**	1	PLUG	
I	40	1	**6Y-4056**	1	HOSE AS	
	41	1	**6V-8801**	4	NUT (3/8-16 THD)	
	42	2	**6V-0852**	2	CAP-DUST	
		2	**6V-3965**	2	FITTING AS	
	43	2	**8T-1674**	1	TEE	
	44	2	**3D-2824**	2	SEAL-O-RING	
	45	2	**6V-8714**	1	CONNECTOR	
I	46	2	**6Y-2549**	1	HOSE AS	
		2	**5K-9090**	2	SEAL-O-RING	
	47	2	**8M-4390**	1	SEAL-O-RING	
	48	2	**8T-8919**	8	BOLT (1/2-13X1.75 IN)	

118-2486 LINES GP-POWER TRAIN OIL *(contd.)* i01749557

NOTE	REF NO	GRAPHIC REF	PART NUMBER	QTY	PART NAME 1 2 3 4 5 6 (PRODUCT LEVEL)	SEE PAGE
	49	2	**4J-0524**	3	SEAL-O-RING	
I	50	2	**8E-1290**	1	HOSE AS	
	51	2	**9G-5127**	1	BREATHER (PRESSURE RELIEF)	
		2	**5P-3501**	1	ADAPTER	
	52	2	**109-0076**	2	SEAL-O-RING	
	53	2	**7X-3392**	8	WASHER-HARD (13.5X22.5X3MM THK)	
Y	54	2	**117-1034**	1	VALVE GP-RELIEF	666
	55	2	**4J-0523**	1	SEAL-O-RING	
	56	2	**8T-4896**	5	WASHER-HARD (10.2X18.5X2.5MM THK)	
	57	2	**6V-8801**	1	NUT (3/8-16 THD)	
		2	**7C-8246**	1	SPACER (10.5X20X24MM THK)	
	58	2	**8T-4223**	31	WASHER-HARD (13.5X25.5X3MM THK)	
	59	2	**7X-0290**	3	BOLT (3/8-16X3.50 IN)	
	60	2	**8M-8157**	1	SEAL-O-RING	
	61	2	**8T-4835**	8	BOLT (1/2-13X2 IN)	
	62	2	**1P-4582**	6	FLANGE-HALF	
	63	2	**8T-9377**	1	BOLT (3/8-16X2.25 IN)	
	64	2	**116-7877**	1	TUBE AS	
	65	2	**5P-2566**	16	BOLT (1/2-13X1.5 IN)	
	66	2	**4D-6763**	2	ELBOW	
	67	2	**116-7876**	1	TUBE AS	
	68	2	**8T-9384**	1	BOLT (1/2-13X0.875 IN)	
	69	2	**6F-0295**	1	CLIP	
		2	**126-3767**	1	PLATE AS	
		2	**1F-0748**	1	NUT-WELD (1/2-13 THD)	
	70	2	**3J-1907**	3	SEAL-O-RING	
	71	2	**1P-4579**	6	FLANGE-HALF	
	72	2	**7D-4069**	2	CLAMP	
I	73	2	**8E-1291**	1	HOSE AS	
	74	2	**4J-0528**	4	SEAL-O-RING	
	75	2	**2P-8421**	1	ADAPTER-O-RING	
	76	2	**117-7092**	1	MANIFOLD	
		2	**9F-7283**	2	SEAL-O-RING	
	77	2	**7X-0326**	6	BOLT (1/2-13X3 IN)	
	78	2	**7M-8485**	2	SEAL-O-RING	
	79	2	**8T-4149**	1	ELBOW	
	80	3	**6V-0852**	2	CAP-DUST	
		3	**6V-3965**	2	FITTING AS	
		3	**3J-1907**	2	SEAL-O-RING	
CY	81	3	*133-1296*	2	FILTER GP-OIL	554
	82	3	**3P-1932**	1	ADAPTER	
		3	**3K-0360**	1	SEAL-O-RING	
	83	3	**8C-3446**	1	VALVE GP-FLUID SAMPLING	
		3	**3J-7354**	1	SEAL-O-RING	
		3	**8C-3447**	1	CAP-DUST	
	84	3	**6L-1651**	2	SEAL-O-RING	
	85	3	**5H-7153**	2	SEAL-O-RING	
	86	3	**9M-9647**	2	SEAL-O-RING	

C-CHANGE FROM PREVIOUS TYPE
I-SEE HOSE FABRICATION GUIDE
Y-SEPARATE ILLUSTRATION

118-2486 **LINES GP-POWER TRAIN OIL** *(contd.)* **i01749557**

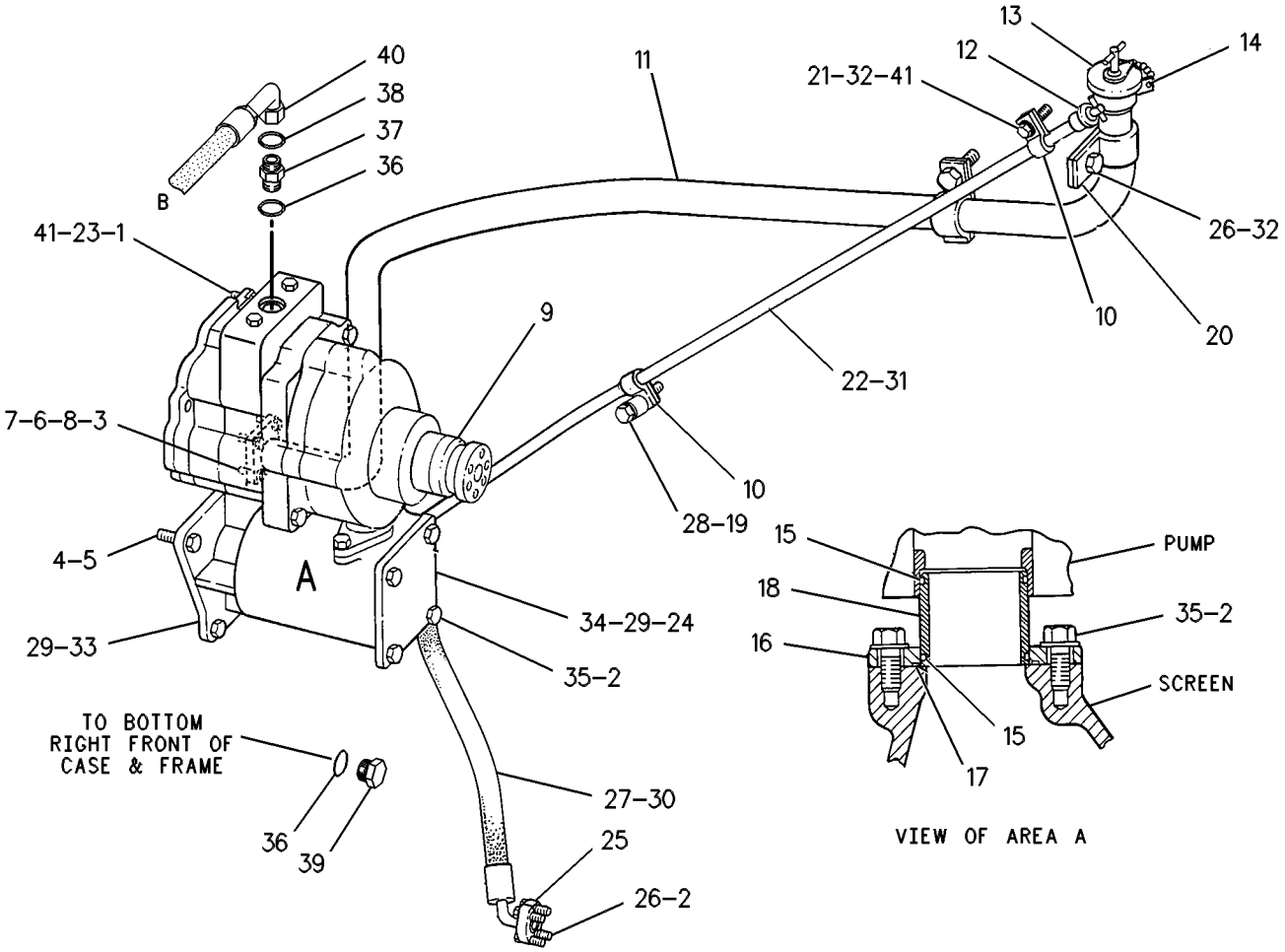

GRAPHIC #1 g00364300

118-2486 **LINES GP-POWER TRAIN OIL** *(contd.)* **i01749557**

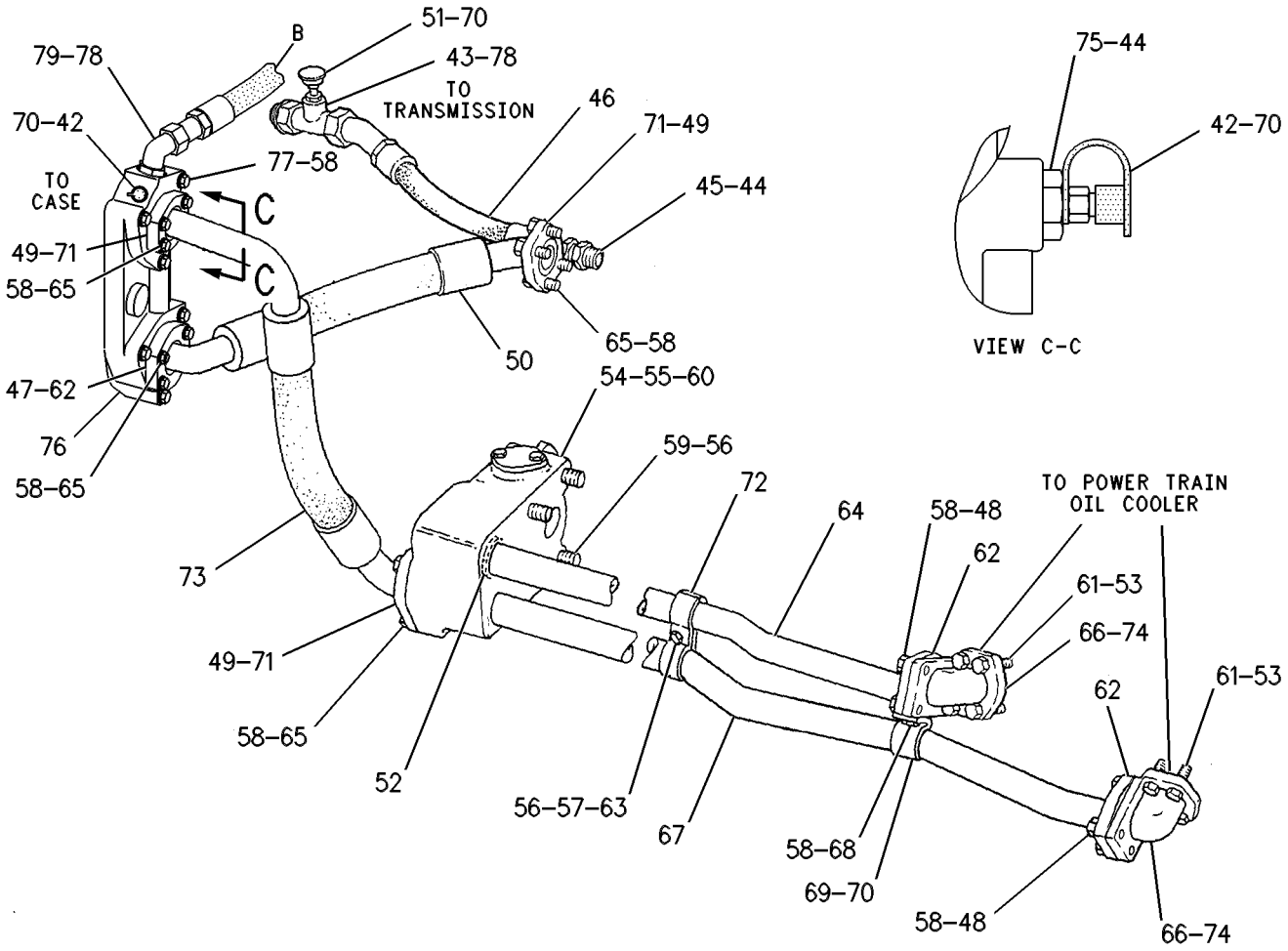

GRAPHIC #2 g00387664

118-2486 **LINES GP-POWER TRAIN OIL** *(contd.)* **i01749557**

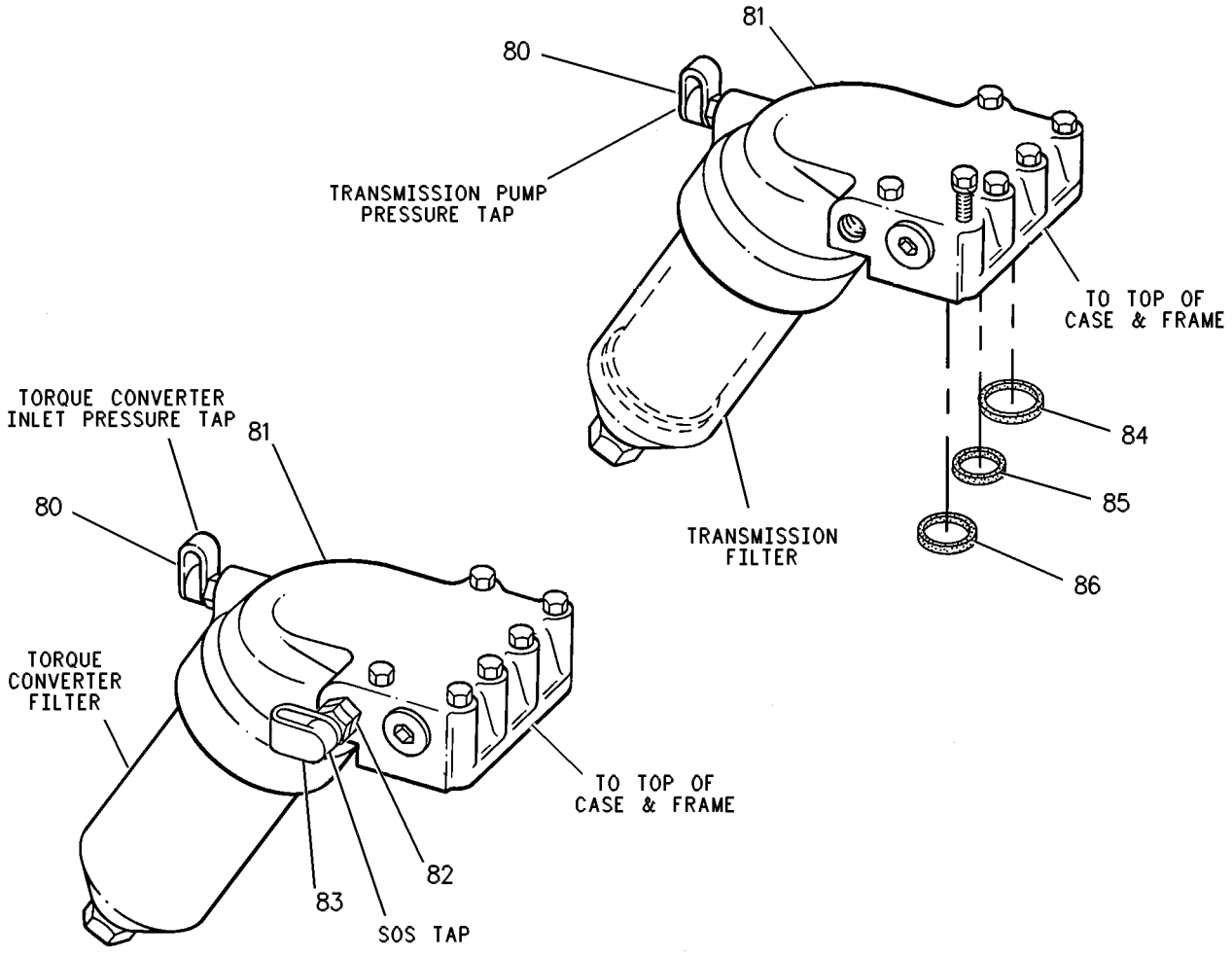

GRAPHIC #3 g00387665

MEMORANDA

POWER TRAIN

118-2486 LINES GP-POWER TRAIN OIL

S/N: 3KR974-1177

SMCS-3016 **i01742806**

NOTE	REF NO	GRAPHIC REF	PART NUMBER	QTY	PART NAME 1 2 3 4 5 6 (PRODUCT LEVEL)	SEE PAGE
	1	1	**2M-1538**	3	STUD-TAPERLOCK	
	2	2	**3S-3439**	1	COVER-TOP	
	3	2	**3S-3875**	1	SCREEN-SUCTION	
	4	2	**3T-2710**	1	FLANGE	
	5	1	**4D-6763**	2	ELBOW	
	6	1	**5K-9238**	1	CONNECTOR-FLARED	
	7	2	**5P-3501**	1	ADAPTER	
	8	1	**6N-2985**	1	CAP AS-FILLER	
C	9	1,2	**6V-0852**	4	CAP-DUST	
C	10	1,2	**6V-3965**	4	FITTING AS	
	11	1	**6Y-1101**	1	TUBE AS	
I	12	2	**6Y-1102**	1	HOSE AS	
I	13	1	**6Y-2549**	1	HOSE AS	
	14	1	**6Y-2573**	1	GAUGE AS	
	15	1	**7C-8246**	1	SPACER (10.5X20X24MM THK)	
	16	1	**7D-4069**	2	CLAMP	
	17	2	**7G-4993**	1	TUBE	
	18	1	**7G-6767**	1	GUIDE AS	
		1	**3K-0846**	1	NUT-FLARED	
	19	1	**8C-3446**	1	VALVE GP-FLUID SAMPLING	
	20	1	**8C-3447**	1	CAP-DUST	
I	21	2	**8E-1290**	1	HOSE AS	
	22	2	**9G-5127**	1	BREATHER	
	23	1	**9M-5732**	1	RIVET-POP	
	24	2	**9S-4181**	1	PLUG	
	25	1	**9V-0999**	1	SPACER (13.8X30X50MM THK)	
	26	1	**116-7876**	1	TUBE AS	
	27	1	**116-7877**	1	TUBE AS	
	28	1	**126-3767**	1	PLATE AS	
		1	**1F-0748**	1	NUT-WELD (1/2-13 THD)	
C	29	1	**129-1609**	1	SEAL-O-RING	
	30	2	**131-0136**	1	TUBE AS	
Y	31	1	*132-3629*	1	PUMP GP-GEAR	637
	32	1	**132-8876**	2	FILTER ELEMENT AS-OIL	
Y	33	1	**133-1296**	2	FILTER GP-OIL	554
	34	2	**134-8079**	1	HOUSING	
C	35	2	**138-4176**	1	TUBE AS	
C	36	2	**141-9497**	2	SEAL-RECTANGULAR	
C	37	2	**142-8438**	1	MANIFOLD	
C	38	1	**145-2888**	1	VALVE GP-RELIEF	
	39	2	**2P-8421**	1	ADAPTER-O-RING	
	40	1	**6V-8714**	1	CONNECTOR	
CI	41	1	**149-6065**	1	HOSE AS	
	42	1	**8T-1674**	1	TEE	
	43	2	**153-1157**	1	SEAL-O-RING	
	44	2	**109-0076**	2	SEAL-O-RING	
	45	1	**1M-3464**	2	CLIP	
	46	1	**1P-3708**	1	SEAL-RECTANGULAR	
	47	2	**1P-4576**	4	FLANGE-HALF	
	48	1,2	**1P-4579**	6	FLANGE-HALF	
	49	1,2	**1P-4582**	6	FLANGE-HALF	
	50	1	**1P-5763**	2	FLANGE-HALF	
C	51	1,2	**3J-1907**	5	SEAL-O-RING	
	52	1	**3J-7354**	1	SEAL-O-RING	
	53	1	**3K-0360**	1	SEAL-O-RING	
	54	1	**3P-1932**	1	ADAPTER	
	55	1	**4B-4274**	1	WASHER (5.5X13X1.2MM THK)	

118-2486 LINES GP-POWER TRAIN OIL *(contd.)*

i01742806

NOTE	REF NO	GRAPHIC REF	PART NUMBER	QTY	PART NAME 1 2 3 4 5 6 (PRODUCT LEVEL)	SEE PAGE
	56	1	**4J-0528**	4	SEAL-O-RING	
	57	2	**4J-5267**	2	SEAL-O-RING	
	58	1	**4L-6454**	1	BOLT (3/8-16X1 IN)	
	59	1	**5H-7153**	2	SEAL-O-RING	
C	60	2	**5K-1770**	2	SEAL-O-RING	
	61	1	**5M-2894**	3	WASHER-HARD (10.2X18.5X2.5MM THK)	
C	62	1,2	**5P-1075**	7	WASHER-HARD (10.2X22.5X3MM THK)	
	63	1	**5P-1076**	1	WASHER-HARD (13.5X30X4MM THK)	
	64	1,2	**5P-2566**	16	BOLT (1/2-13X1.5 IN)	
	65	2	**5P-7468**	2	CLIP (SLOT)	
	66	2	**5P-7469**	2	CLIP (TAB)	
C	67	2	**5P-7701**	2	SEAL-O-RING	
	68	2	**5S-7382**	10	BOLT (3/8-16X1.375 IN)	
	69	1	**6F-0295**	1	CLIP	
	70	1	**6L-1651**	2	SEAL-O-RING	
C	71	2	**6V-5101**	2	SEAL-O-RING	
	72	2	**6V-5656**	1	SEAL-O-RING	
C	73	1	**6V-8801**	4	NUT (3/8-16 THD)	
C	74	2	**6V-9008**	2	ELBOW	
	75	1,2	**7M-8485**	2	SEAL-O-RING	
	76	1	**7X-0290**	3	BOLT (3/8-16X3.50 IN)	
	77	1	**7X-3392**	8	WASHER-HARD (13.5X22.5X3MM THK)	
	78	1	**8C-3077**	1	SEAL	
C	79	2	**8C-3093**	2	SEAL-O-RING	
	80	2	**8M-4390**	1	SEAL-O-RING	
C	81	1	**8M-4443**	1	SEAL-O-RING	
	82	1	**8M-4992**	1	SEAL-O-RING	
C	83	2	**8M-5661**	3	SEAL-O-RING	
	84	2	**8M-8157**	1	SEAL-O-RING	
C	85	1,2	**8T-4223**	37	WASHER-HARD (13.5X25.5X3MM THK)	
	86	1	**8T-4835**	12	BOLT (1/2-13X2 IN)	
	87	1,2	**8T-4896**	15	WASHER-HARD (10.2X18.5X2.5MM THK)	
	88	1	**8T-7971**	4	WASHER-HARD (13.5X25.5X5MM THK)	
	89	2	**8T-8917**	2	BOLT (1/2-13X1.25 IN)	
	90	1,2	**8T-8919**	12	BOLT (1/2-13X1.75 IN)	
C	91	1,2	**8T-8920**	7	BOLT (1/2-13X3.25 IN)	
	92	1	**8T-9377**	1	BOLT (3/8-16X2.25 IN)	
	93	1	**8T-9384**	1	BOLT (1/2-13X0.875 IN)	
	94	2	**9B-7237**	6	BOLT (3/8-16X1.25 IN)	
	95	1	**9M-9647**	2	SEAL-O-RING	
	96	1	**5K-9090**	2	SEAL-O-RING	
	97	1,2	**3D-2824**	2	SEAL-O-RING	

C-CHANGE FROM PREVIOUS TYPE
I-SEE HOSE FABRICATION GUIDE
Y-SEPARATE ILLUSTRATION

118-2486 **LINES GP-POWER TRAIN OIL** *(contd.)* **i01742806**

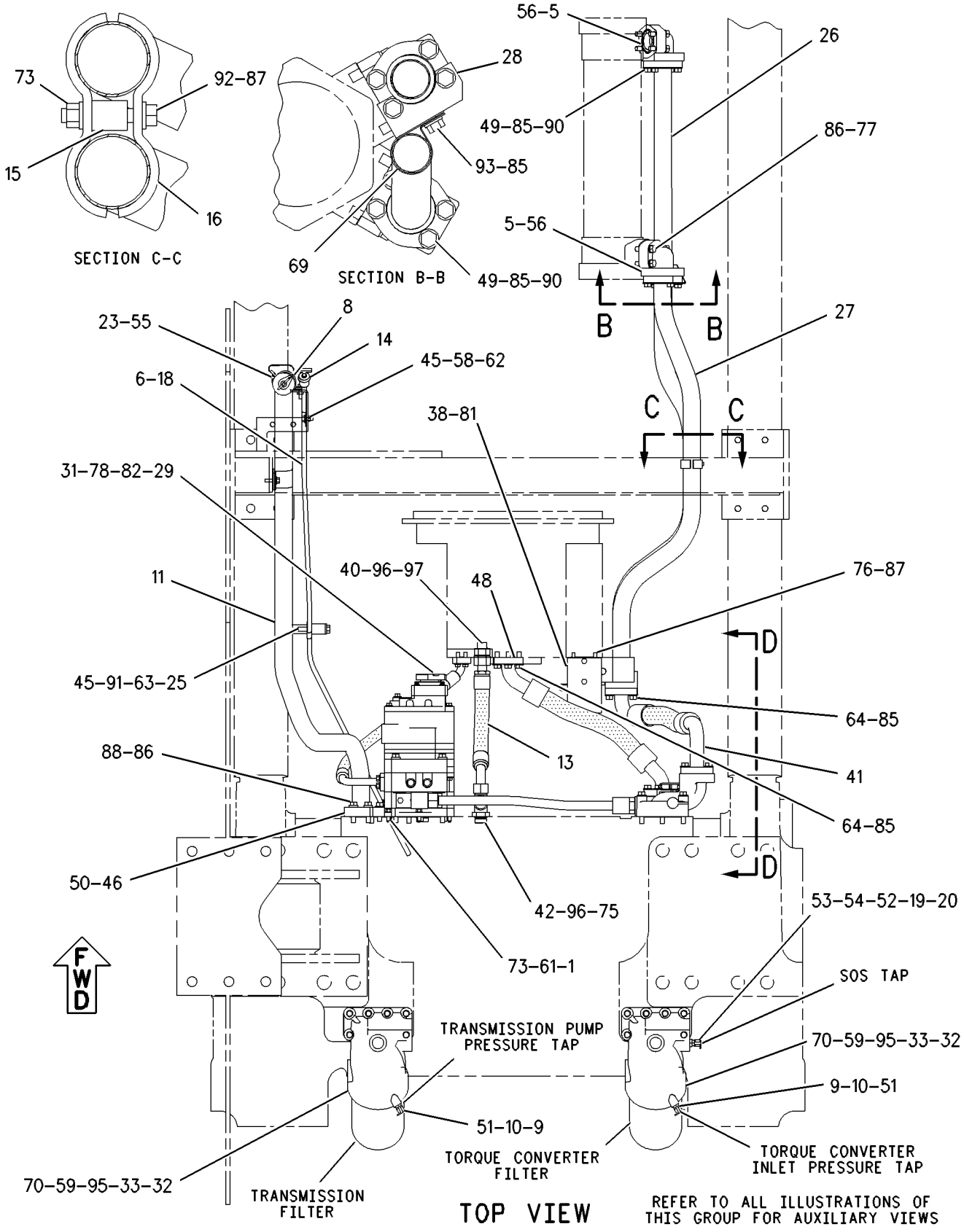

GRAPHIC #1 g00544948

118-2486 **LINES GP-POWER TRAIN OIL** *(contd.)* **i01742806**

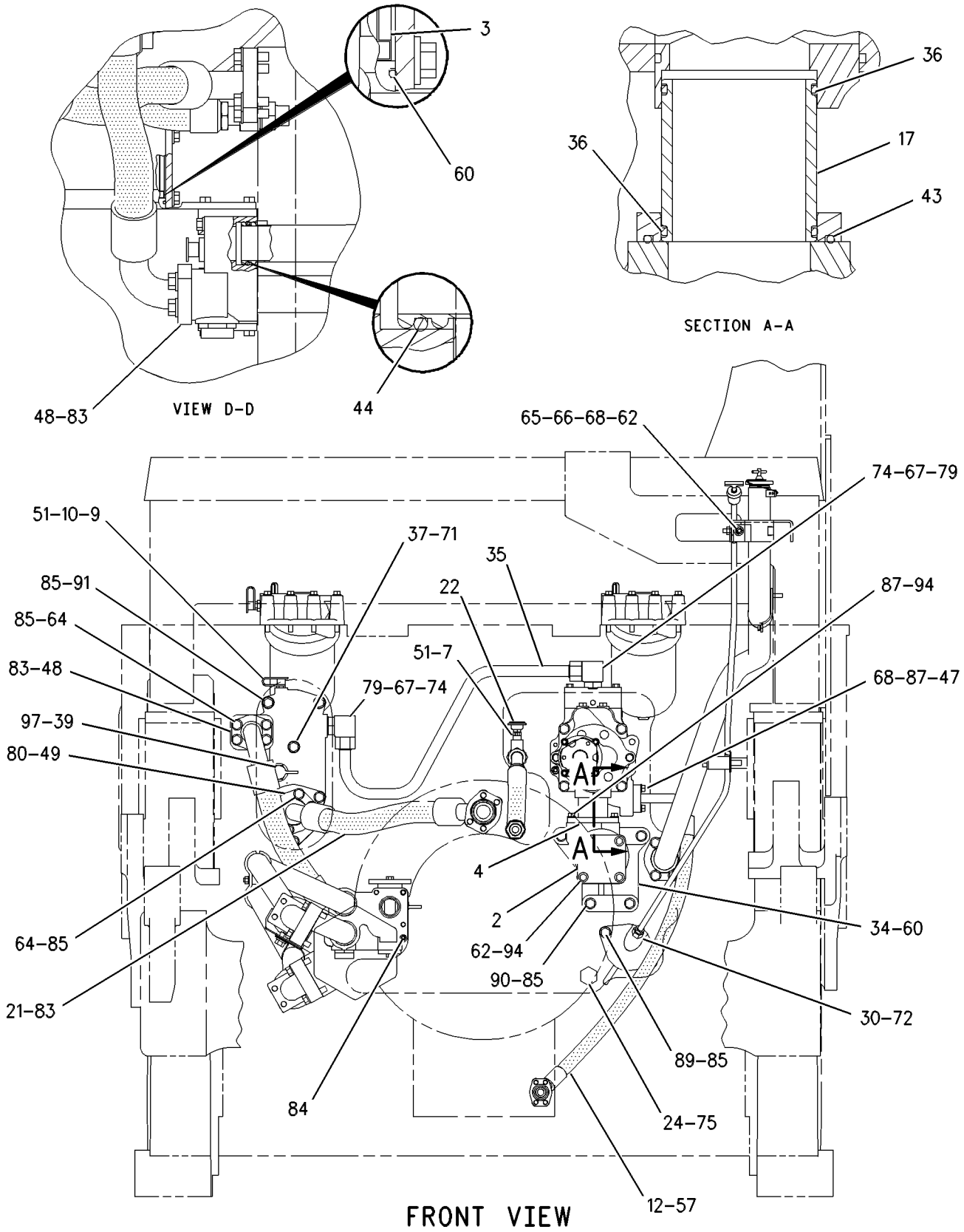

GRAPHIC #2 g00545025

POWER TRAIN

118-2486 LINES GP-POWER TRAIN OIL

S/N: 3KR1178-1621

SMCS-3016 **i01742809**

NOTE	REF NO	GRAPHIC REF	PART NUMBER	QTY	PART NAME 1 2 3 4 5 6 (PRODUCT LEVEL)	SEE PAGE
	1	1	**2M-1538**	3	STUD-TAPERLOCK	
	2	2	**3S-3439**	1	COVER-TOP	
	3	2	**3S-3875**	1	SCREEN-SUCTION	
	4	2	**3T-2710**	1	FLANGE	
	5	1	**4D-6763**	2	ELBOW	
	6	1	**5K-9238**	1	CONNECTOR-FLARED	
	7	2	**5P-3501**	1	ADAPTER	
	8	1	**6N-2985**	1	CAP AS-FILLER	
	9	1,2	**6V-0852**	4	CAP-DUST	
	10	1,2	**6V-3965**	4	FITTING AS	
	11	1	**6Y-1101**	1	TUBE AS	
I	12	2	**6Y-1102**	1	HOSE AS	
I	13	1	**6Y-2549**	1	HOSE AS	
	14	1	**6Y-2573**	1	GAUGE AS	
	15	1	**7C-8246**	1	SPACER (10.5X20X24MM THK)	
	16	1	**7D-4069**	2	CLAMP	
	17	2	**7G-4993**	1	TUBE	
	18	1	**7G-6767**	1	GUIDE AS	
		1	**3K-0846**	1	NUT-FLARED	
	19	1	**8C-3446**	1	VALVE GP-FLUID SAMPLING	
	20	1	**8C-3447**	1	CAP-DUST	
I	21	2	**8E-1290**	1	HOSE AS	
	22	1	**9G-5127**	1	BREATHER	
	23	1	**9M-5732**	1	RIVET-POP	
	24	2	**9S-4181**	1	PLUG	
	25	1	**9V-0999**	1	SPACER (13.8X30X50MM THK)	
	26	1	**116-7876**	1	TUBE AS	
	27	1	**116-7877**	1	TUBE AS	
	28	1	**126-3767**	1	PLATE AS	
		1	**1F-0748**	1	NUT-WELD (1/2-13 THD)	
	29	1	**129-1609**	1	SEAL-O-RING	
	30	2	**131-0136**	1	TUBE AS	
Y	31	1	*132-3629*	1	PUMP GP-GEAR	637
	32	1	**132-8876**	2	FILTER ELEMENT AS-OIL	
CY	33	1	**165-8428**	2	FILTER GP-OIL	556
	34	2	**134-8079**	1	HOUSING	
	35	2	**138-4176**	1	TUBE AS	
	36	2	**141-9497**	2	SEAL-RECTANGULAR	
	37	2	**142-8438**	1	MANIFOLD	
	38	1	**145-2888**	1	VALVE GP-RELIEF	
	39	2	**2P-8421**	1	ADAPTER-O-RING	
	40	1	**6V-8714**	1	CONNECTOR	
I	41	1	**149-6065**	1	HOSE AS	
	42	1	**8T-1674**	1	TEE	
	43	2	**153-1157**	1	SEAL-O-RING	
	44	2	**109-0076**	2	SEAL-O-RING	
	45	1	**1M-3464**	2	CLIP	
	46	1	**1P-3708**	1	SEAL-RECTANGULAR	
	47	2	**1P-4576**	4	FLANGE-HALF	
	48	1,2	**1P-4579**	6	FLANGE-HALF	
	49	1,2	**1P-4582**	6	FLANGE-HALF	
	50	1	**1P-5763**	2	FLANGE-HALF	
	51	1,2	**3J-1907**	5	SEAL-O-RING	
	52	1	**3J-7354**	1	SEAL-O-RING	
	53	1	**3K-0360**	1	SEAL-O-RING	
	54	1	**3P-1932**	1	ADAPTER	
	55	1	**4B-4274**	1	WASHER (5.5X13X1.2MM THK)	

118-2486 LINES GP-POWER TRAIN OIL *(contd.)*

i01742809

NOTE	REF NO	GRAPHIC REF	PART NUMBER	QTY	PART NAME 1 2 3 4 5 6 (PRODUCT LEVEL)	SEE PAGE
	56	1	**4J-0528**	4	SEAL-O-RING	
	57	2	**4J-5267**	2	SEAL-O-RING	
	58	1	**4L-6454**	1	BOLT (3/8-16X1 IN)	
	59	1	**5H-7153**	2	SEAL-O-RING	
	60	2	**5K-1770**	2	SEAL-O-RING	
	61	1	**5M-2894**	3	WASHER-HARD (10.2X18.5X2.5MM THK)	
	62	1,2	**5P-1075**	7	WASHER-HARD (10.2X22.5X3MM THK)	
	63	1	**5P-1076**	1	WASHER-HARD (13.5X30X4MM THK)	
	64	1,2	**5P-2566**	16	BOLT (1/2-13X1.5 IN)	
	65	2	**5P-7468**	2	CLIP (SLOT)	
	66	2	**5P-7469**	2	CLIP (TAB)	
	67	2	**5P-7701**	2	SEAL-O-RING	
	68	2	**5S-7382**	10	BOLT (3/8-16X1.375 IN)	
	69	1	**6F-0295**	1	CLIP	
	70	1	**6L-1651**	2	SEAL-O-RING	
	71	2	**6V-5101**	2	SEAL-O-RING	
	72	2	**6V-5656**	1	SEAL-O-RING	
	73	1	**6V-8801**	4	NUT (3/8-16 THD)	
	74	2	**6V-9008**	2	ELBOW	
	75	1,2	**7M-8485**	2	SEAL-O-RING	
	76	1	**7X-0290**	3	BOLT (3/8-16X3.50 IN)	
	77	1	**7X-3392**	8	WASHER-HARD (13.5X22.5X3MM THK)	
	78	1	**8C-3077**	1	SEAL	
	79	2	**8C-3093**	2	SEAL-O-RING	
	80	2	**8M-4390**	1	SEAL-O-RING	
	81	1	**8M-4443**	1	SEAL-O-RING	
	82	1	**8M-4992**	1	SEAL-O-RING	
	83	2	**8M-5661**	3	SEAL-O-RING	
	84	2	**8M-8157**	1	SEAL-O-RING	
	85	1,2	**8T-4223**	37	WASHER-HARD (13.5X25.5X3MM THK)	
	86	1	**8T-4835**	12	BOLT (1/2-13X2 IN)	
	87	1,2	**8T-4896**	15	WASHER-HARD (10.2X18.5X2.5MM THK)	
	88	1	**8T-7971**	4	WASHER-HARD (13.5X25.5X5MM THK)	
	89	2	**8T-8917**	2	BOLT (1/2-13X1.25 IN)	
	90	1,2	**8T-8919**	12	BOLT (1/2-13X1.75 IN)	
	91	1,2	**8T-8920**	7	BOLT (1/2-13X3.25 IN)	
	92	1	**8T-9377**	1	BOLT (3/8-16X2.25 IN)	
	93	1	**8T-9384**	1	BOLT (1/2-13X0.875 IN)	
	94	2	**9B-7237**	6	BOLT (3/8-16X1.25 IN)	
	95	1	**9M-9647**	2	SEAL-O-RING	
	96	1	**5K-9090**	2	SEAL-O-RING	
	97	1,2	**3D-2824**	2	SEAL-O-RING	

C-CHANGE FROM PREVIOUS TYPE
I-SEE HOSE FABRICATION GUIDE
Y-SEPARATE ILLUSTRATION

118-2486 **LINES GP-POWER TRAIN OIL** *(contd.)* **i01742809**

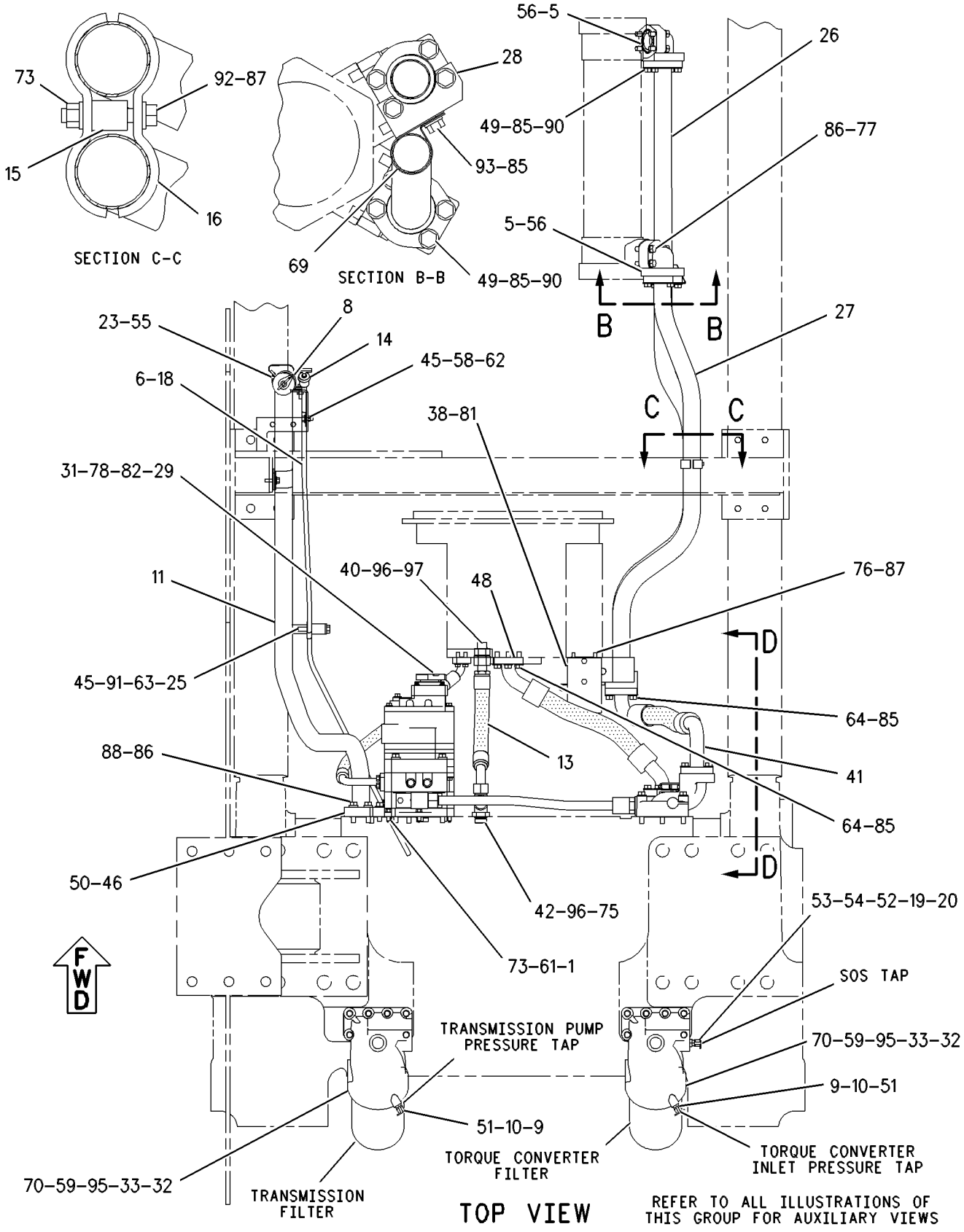

GRAPHIC #1 g00544948

118-2486 **LINES GP-POWER TRAIN OIL** *(contd.)* **i01742809**

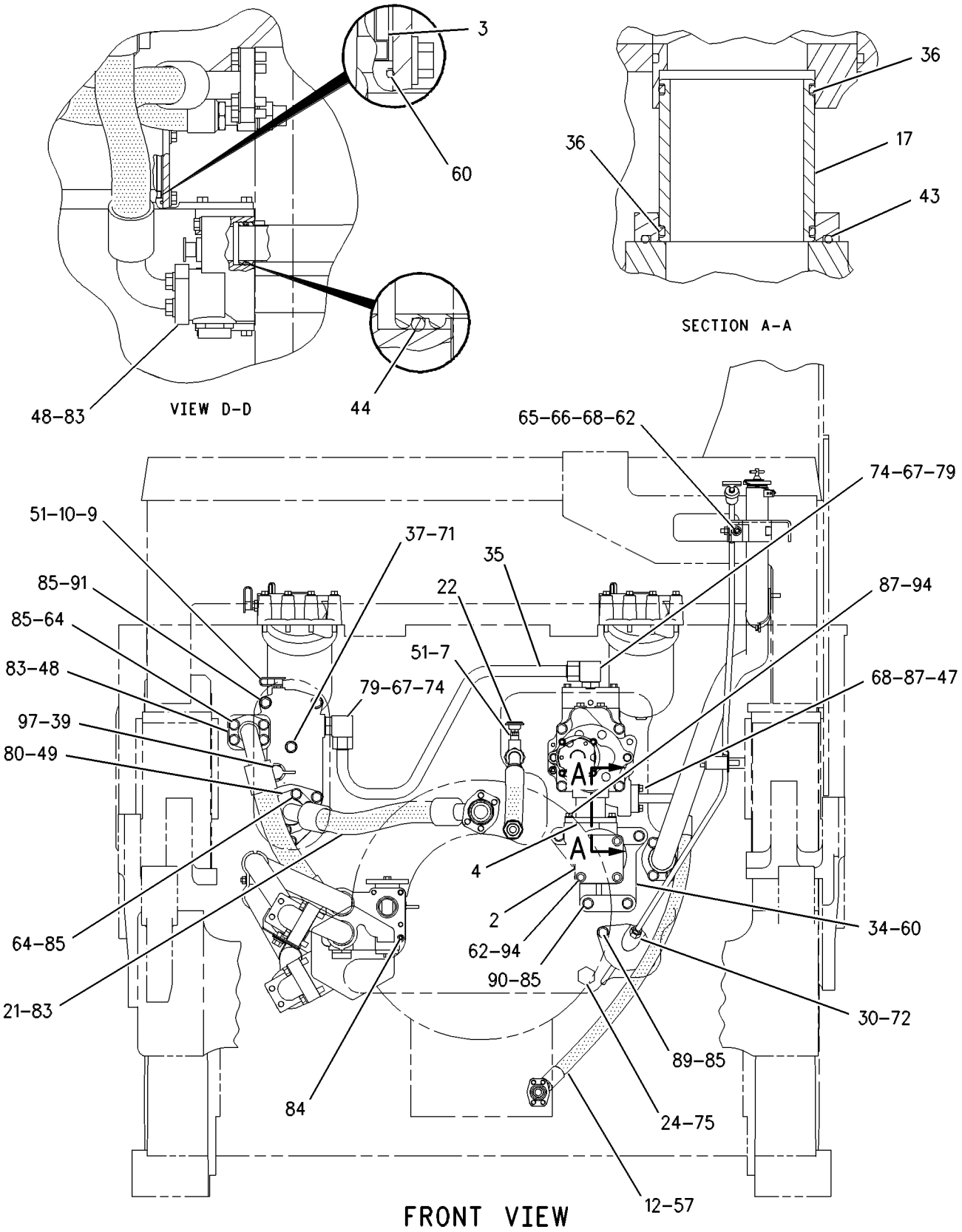

GRAPHIC #2 g00545025

POWER TRAIN

118-2486 LINES GP-POWER TRAIN OIL

S/N: 3KR1622-UP

SMCS-3016 **i01742811**

NOTE	REF NO	GRAPHIC REF	PART NUMBER	QTY	PART NAME 1 2 3 4 5 6 (PRODUCT LEVEL)	SEE PAGE
	1	1	**2M-1538**	3	STUD-TAPERLOCK	
	2	2	**3S-3439**	1	COVER-TOP	
	3	2	**3S-3875**	1	SCREEN-SUCTION	
	4	2	**3T-2710**	1	FLANGE	
	5	1	**4D-6763**	2	ELBOW	
	6	1	**5K-9238**	1	CONNECTOR-FLARED	
	7	2	**5P-3501**	1	ADAPTER	
	8	1	**6N-2985**	1	CAP AS-FILLER	
	9	1,2	**6V-0852**	4	CAP-DUST	
	10	1,2	**6V-3965**	4	FITTING AS	
C	11	1	**199-3209**	1	TUBE AS	
I	12	2	**6Y-1102**	1	HOSE AS	
I	13	1	**6Y-2549**	1	HOSE AS	
	14	1	**6Y-2573**	1	GAUGE AS	
	15	1	**7C-8246**	1	SPACER (10.5X20X24MM THK)	
	16	1	**7D-4069**	2	CLAMP	
	17	2	**7G-4993**	1	TUBE	
	18	1	**7G-6767**	1	GUIDE AS	
		1	**3K-0846**	1	NUT-FLARED	
	19	1	**8C-3446**	1	VALVE GP-FLUID SAMPLING	
	20	1	**8C-3447**	1	CAP-DUST	
I	21	2	**8E-1290**	1	HOSE AS	
	22	2	**9G-5127**	1	BREATHER	
	23	1	**9M-5732**	1	RIVET-POP	
	24	2	**9S-4181**	1	PLUG	
	25	1	**9V-0999**	1	SPACER (13.8X30X50MM THK)	
	26	1	**116-7876**	1	TUBE AS	
	27	1	**116-7877**	1	TUBE AS	
	28	1	**126-3767**	1	PLATE AS	
		1	**1F-0748**	1	NUT-WELD (1/2-13 THD)	
	29	1	**129-1609**	1	SEAL-O-RING	
	30	2	**131-0136**	1	TUBE AS	
Y	31	1	*132-3629*	1	PUMP GP-GEAR	637
	32	1	**132-8876**	2	FILTER ELEMENT AS-OIL	
CY	33	1	**165-8428**	2	FILTER GP-OIL	556
	34	2	**134-8079**	1	HOUSING	
	35	2	**138-4176**	1	TUBE AS	
	36	2	**141-9497**	2	SEAL-RECTANGULAR	
	37	2	**142-8438**	1	MANIFOLD	
Y	38	1	**145-2888**	1	VALVE GP-RELIEF	668
	39	2	**2P-8421**	1	ADAPTER-O-RING	
	40	1	**6V-8714**	1	CONNECTOR	
I	41	1	**149-6065**	1	HOSE AS	
	42	1	**8T-1674**	1	TEE	
	43	2	**153-1157**	1	SEAL-O-RING	
	44	2	**109-0076**	2	SEAL-O-RING	
	45	1	**1M-3464**	2	CLIP	
	46	1	**1P-3708**	1	SEAL-RECTANGULAR	
	47	2	**1P-4576**	4	FLANGE-HALF	
	48	1,2	**1P-4579**	6	FLANGE-HALF	
	49	1,2	**1P-4582**	6	FLANGE-HALF	
	50	1	**1P-5763**	2	FLANGE-HALF	
	51	1,2	**3J-1907**	5	SEAL-O-RING	
	52	1	**3J-7354**	1	SEAL-O-RING	
	53	1	**3K-0360**	1	SEAL-O-RING	
	54	1	**3P-1932**	1	ADAPTER	
	55	1	**4B-4274**	1	WASHER (5.5X13X1.2MM THK)	

118-2486 LINES GP-POWER TRAIN OIL *(contd.)*

i01742811

NOTE	REF NO	GRAPHIC REF	PART NUMBER	QTY	PART NAME 1 2 3 4 5 6 (PRODUCT LEVEL)	SEE PAGE
	56	1	**4J-0528**	4	SEAL-O-RING	
	57	2	**4J-5267**	2	SEAL-O-RING	
	58	1	**4L-6454**	1	BOLT (3/8-16X1 IN)	
	59	1	**5H-7153**	2	SEAL-O-RING	
	60	2	**5K-1770**	2	SEAL-O-RING	
	61	1	**5M-2894**	3	WASHER-HARD (10.2X18.5X2.5MM THK)	
	62	1,2	**5P-1075**	7	WASHER-HARD (10.2X22.5X3MM THK)	
	63	1	**5P-1076**	1	WASHER-HARD (13.5X30X4MM THK)	
	64	1,2	**5P-2566**	16	BOLT (1/2-13X1.5 IN)	
	65	2	**5P-7468**	2	CLIP (SLOT)	
	66	2	**5P-7469**	2	CLIP (TAB)	
	67	2	**5P-7701**	2	SEAL-O-RING	
	68	2	**5S-7382**	10	BOLT (3/8-16X1.375 IN)	
	69	1	**6F-0295**	1	CLIP	
	70	1	**6L-1651**	2	SEAL-O-RING	
	71	2	**6V-5101**	2	SEAL-O-RING	
	72	2	**6V-5656**	1	SEAL-O-RING	
	73	1	**6V-8801**	4	NUT (3/8-16 THD)	
	74	2	**6V-9008**	2	ELBOW	
	75	1,2	**7M-8485**	2	SEAL-O-RING	
	76	1	**7X-0290**	3	BOLT (3/8-16X3.50 IN)	
	77	1	**7X-3392**	8	WASHER-HARD (13.5X22.5X3MM THK)	
	78	1	**8C-3077**	1	SEAL	
	79	2	**8C-3093**	2	SEAL-O-RING	
	80	2	**8M-4390**	1	SEAL-O-RING	
	81	1	**8M-4443**	1	SEAL-O-RING	
	82	1	**8M-4992**	1	SEAL-O-RING	
	83	2	**8M-5661**	3	SEAL-O-RING	
	84	2	**8M-8157**	1	SEAL-O-RING	
	85	1,2	**8T-4223**	37	WASHER-HARD (13.5X25.5X3MM THK)	
	86	1	**8T-4835**	12	BOLT (1/2-13X2 IN)	
	87	1,2	**8T-4896**	15	WASHER-HARD (10.2X18.5X2.5MM THK)	
	88	1	**8T-7971**	4	WASHER-HARD (13.5X25.5X5MM THK)	
	89	2	**8T-8917**	2	BOLT (1/2-13X1.25 IN)	
	90	1,2	**8T-8919**	12	BOLT (1/2-13X1.75 IN)	
	91	1,2	**8T-8920**	7	BOLT (1/2-13X3.25 IN)	
	92	1	**8T-9377**	1	BOLT (3/8-16X2.25 IN)	
	93	1	**8T-9384**	1	BOLT (1/2-13X0.875 IN)	
	94	2	**9B-7237**	6	BOLT (3/8-16X1.25 IN)	
	95	1	**9M-9647**	2	SEAL-O-RING	
	96	1	**5K-9090**	2	SEAL-O-RING	
	97	1,2	**3D-2824**	2	SEAL-O-RING	

C-CHANGE FROM PREVIOUS TYPE
I-SEE HOSE FABRICATION GUIDE
Y-SEPARATE ILLUSTRATION

118-2486 **LINES GP-POWER TRAIN OIL** *(contd.)* **i01742811**

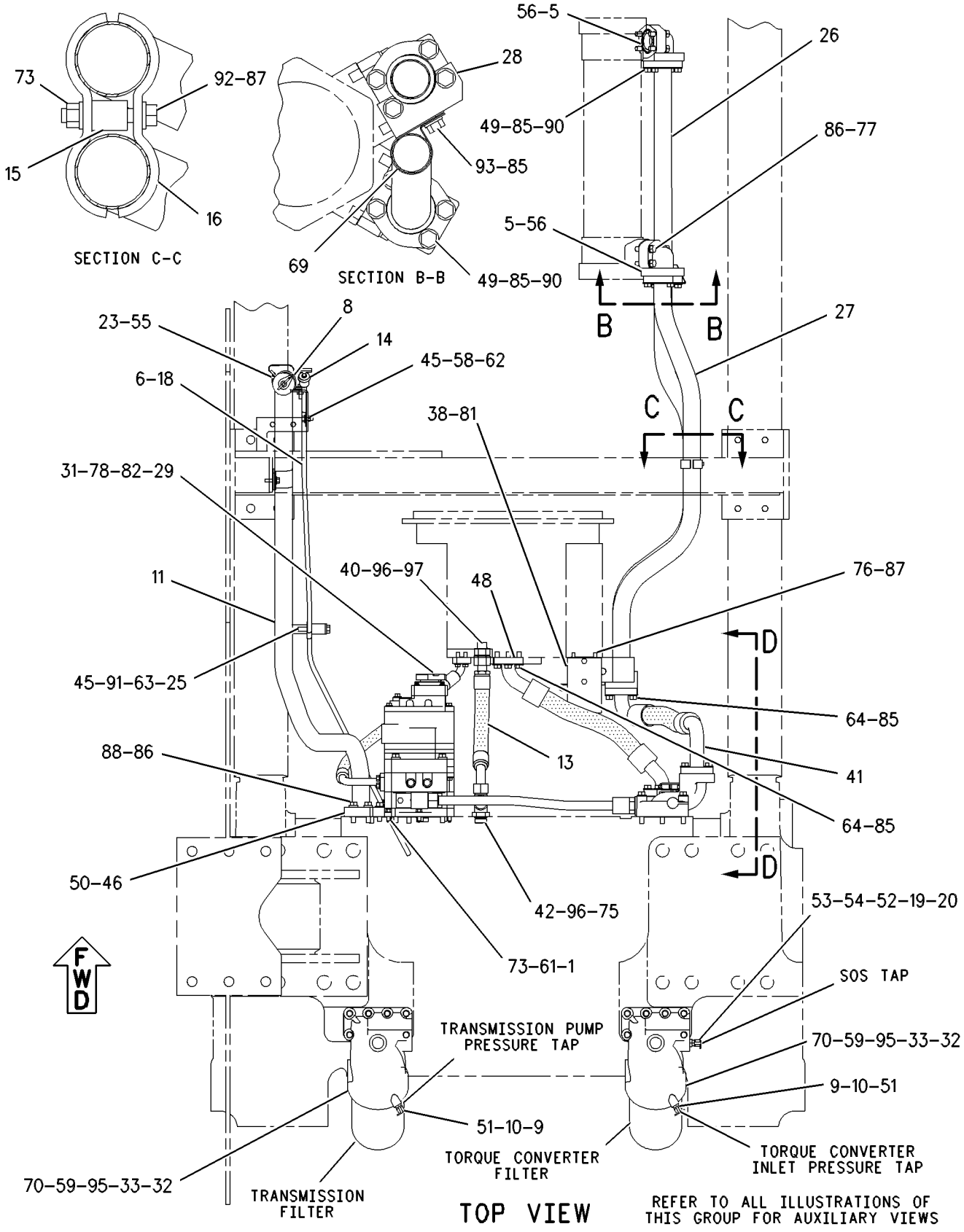

GRAPHIC #1 g00544948

118-2486 **LINES GP-POWER TRAIN OIL** *(contd.)* **i01742811**

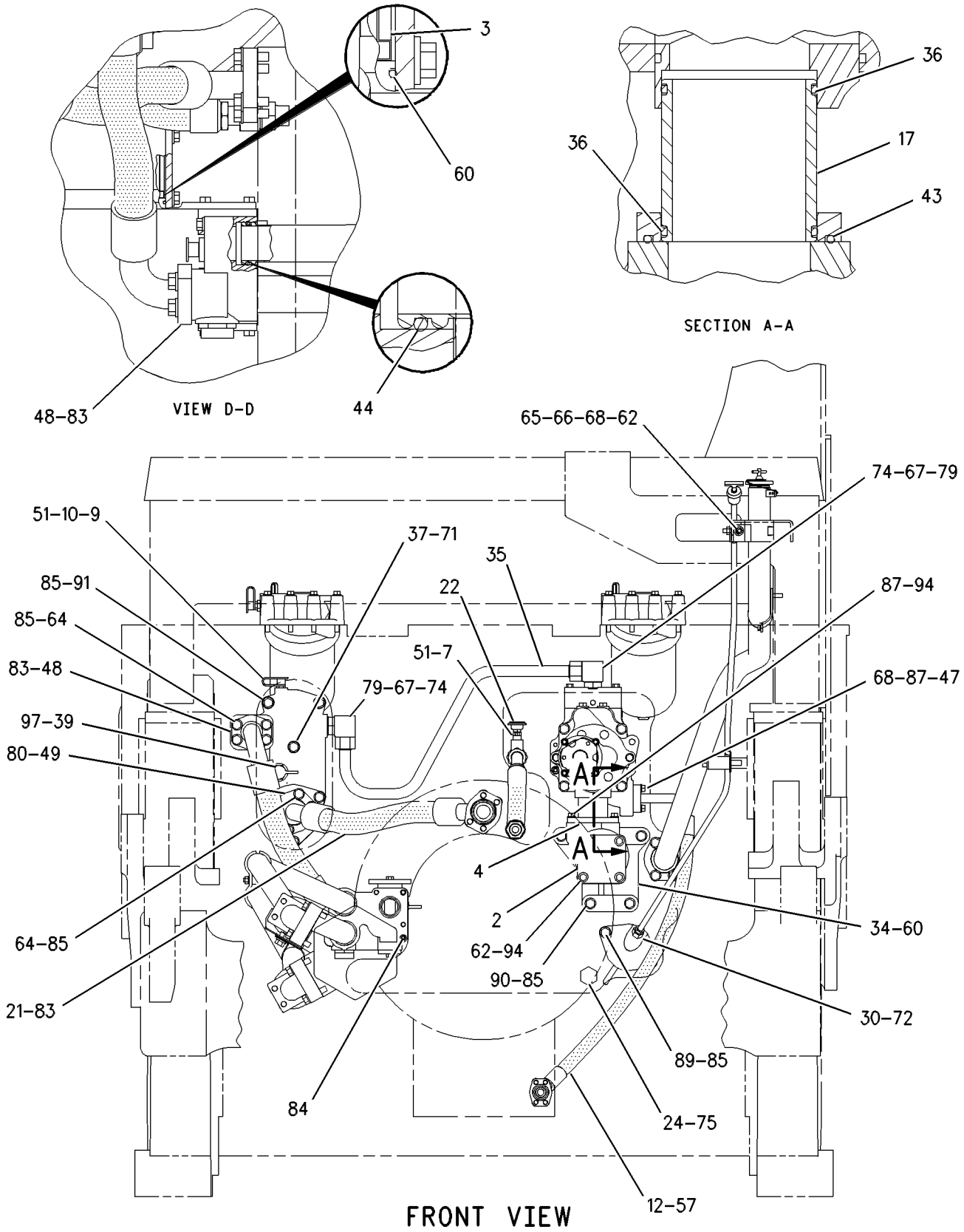

GRAPHIC #2 g00545025

POWER TRAIN

133-3246 MANIFOLD & VALVE GP

S/N: 3KR1-1604

PART OF 133-3255 VALVE GP-CONTROL

SMCS-4320 **i01232208**

NOTE	REF NO	GRAPHIC REF	PART NUMBER	QTY	PART NAME 1 2 3 4 5 6 (PRODUCT LEVEL)	SEE PAGE
	1	1	**132-9455**	1	MANIFOLD	
Y	2	1	**133-2250**	2	VALVE GP-SOLENOID (24 VOLT)	1054

Y-SEPARATE ILLUSTRATION

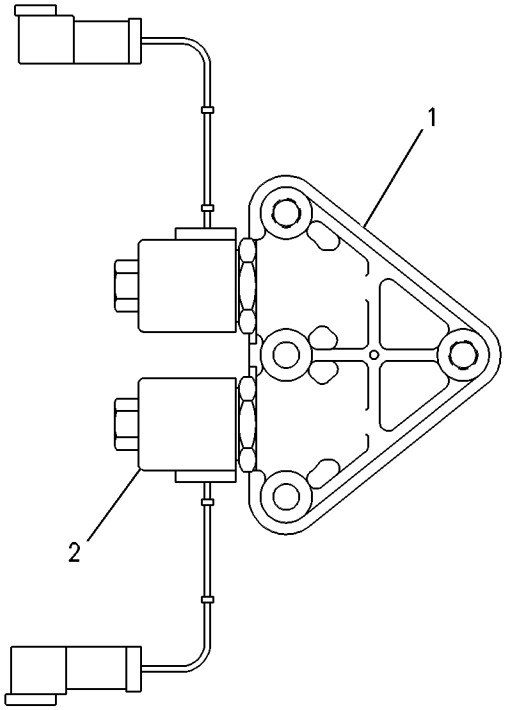

GRAPHIC #1 g00257857

POWER TRAIN

137-8795 MANIFOLD & VALVE GP

S/N: 3KR1-1604

PART OF 133-3255 VALVE GP-CONTROL

SMCS-4320 **i01742987**

NOTE	REF NO	GRAPHIC REF	PART NUMBER	QTY	PART NAME 1 2 3 4 5 6 (PRODUCT LEVEL)	SEE PAGE
	1	1	**111-3199**	1	MANIFOLD	
Y	2	1	**121-4030**	4	VALVE GP-SOLENOID	1051
	3	1	**137-8794**	2	SPOOL AS	
					(EACH INCLUDES)	
	4	1	**5L-4758**	1	SEAL-O-RING	
	5	1	**137-8793**	1	SPRING	
	6	1	**3D-7943**	1	RING-RETAINING	
	7	1	**1P-1744**	2	DOWEL	

Y-SEPARATE ILLUSTRATION

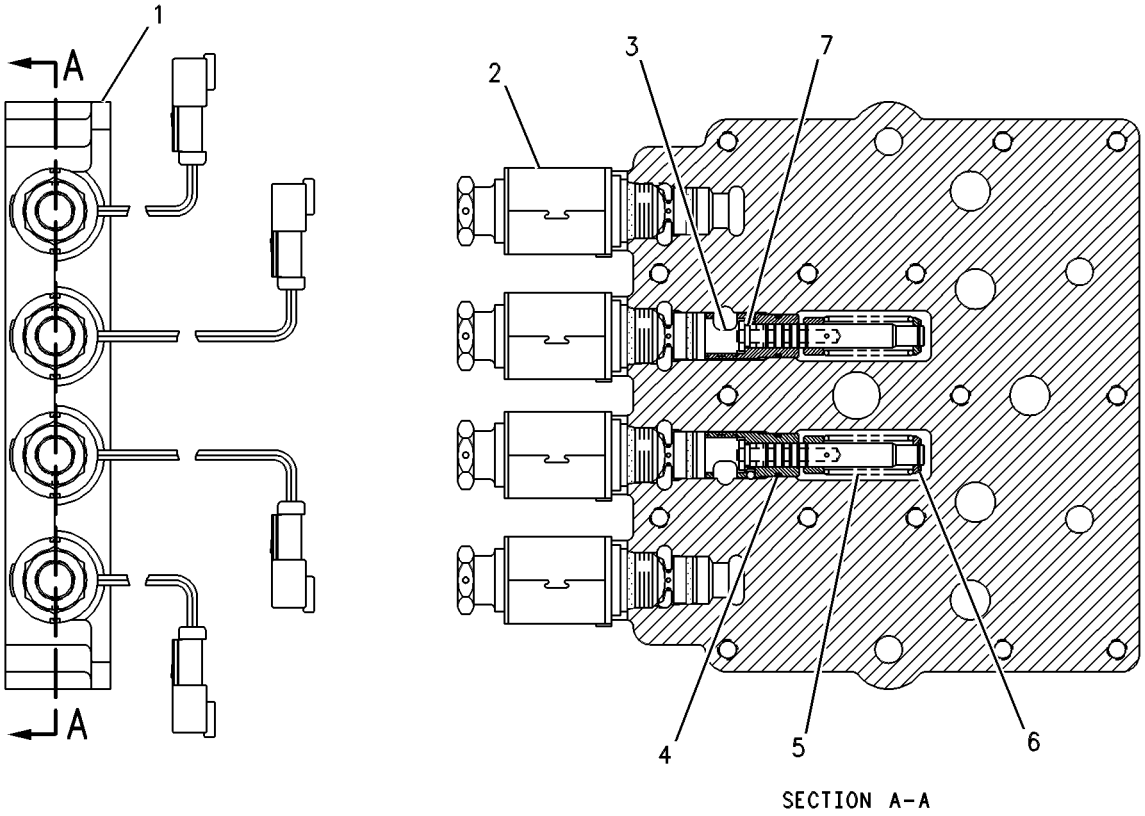

GRAPHIC #1 g00262745

122-8682 MOUNTING GP-TRANSMISSION

S/N: 3KR1-UP

SMCS-3030 **i01743034**

NOTE	REF NO	GRAPHIC REF	PART NUMBER	QTY	PART NAME 1 2 3 4 5 6 (PRODUCT LEVEL)	SEE PAGE
	1	1	**5J-5793**	2	BOLT-12 POINT HEAD (1/2-13X1.75 IN)	
	2	1	**1B-2886**	18	BOLT (1/2-13X3.75 IN)	
	3	1	**2A-1531**	3	BOLT (1/2-13X6.5 IN)	
	4	1	**5P-8245**	23	WASHER-HARD (13.5X25.5X3MM THK)	
	5	1	**9M-9647**	3	SEAL-O-RING	
	6	1	**6L-9284**	1	SEAL-O-RING	
	7	1	**5P-9519**	1	SEAL-O-RING	
	8	1	**7M-0475**	1	RING-SEALING	
	9	1	**3T-5830**	1	PLATE	
	10	1	**0S-1591**	4	BOLT (3/8-16X1.5 IN)	
	11	1	**5M-2894**	4	WASHER-HARD (10.2X18.5X2.5MM THK)	

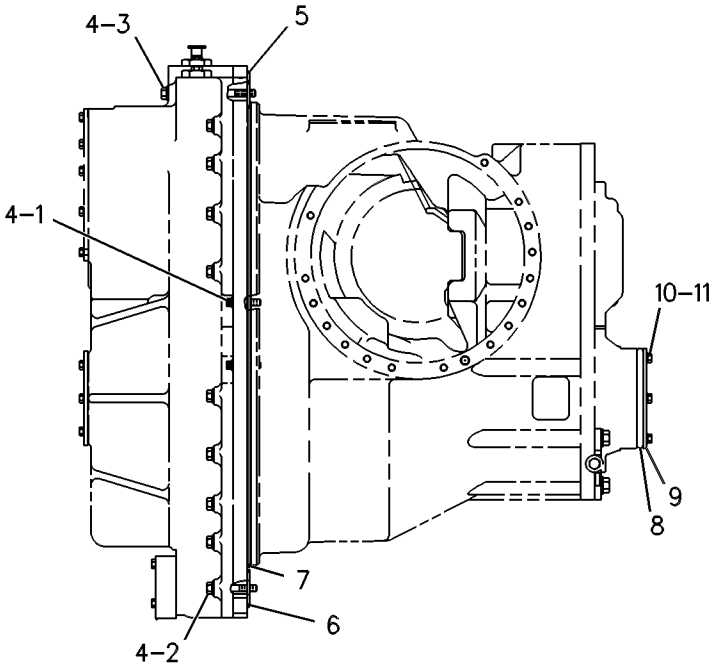

GRAPHIC #1 g00252752

MEMORANDA

POWER TRAIN

110-9295 PLANETARY GP-TRANSMISSION

S/N: 1LY1-UP

PART OF 110-9296 TRANSMISSION AR

SMCS-3155, 3160, 3169, 3170, 3187, 3189, 3190, 3304 **i01743037**

NOTE	REF NO	GRAPHIC REF	PART NUMBER	QTY	PART NAME 1 2 3 4 5 6 (PRODUCT LEVEL)	SEE PAGE
	1	1	**2J-3118**	4	BOLT-LOCKING (3/8-16X1.25 IN)	
	2	1	**5M-2894**	20	WASHER-HARD (10.2X18.5X2.5MM THK)	
	3	1	**137-5532**	1	SEAL-LIP TYPE	
	4	1	**8T-1141**	2	RING-RETAINING	
	5	1	**110-9264**	1	HOUSING AS	
	6	1	**7M-8480**	4	DOWEL	
	7	1	**116-8658**	1	PLATE	
	8	1	**5P-8245**	21	WASHER-HARD (13.5X25.5X3MM THK)	
	9	1	**110-9278**	1	MANIFOLD AS	
	10	1	**7M-8480**	2	DOWEL	
	11	1	**7M-1199**	24	SPRING	
	12	1	**114-4653**	6	DOWEL-REACTION	
	13	1	**1M-8657**	21	BOLT (1/2-13X15.69 IN)	
	14	1	**110-9269**	1	HOUSING-CLUTCH	
	15	1	**3P-2794**	2	SEAL-RING	
	16	1	**3P-2793**	2	SEAL-RING	
	17	1	**153-5481**	2	PISTON-CLUTCH	
	18	1	**169-7055**	3	DISC-CLUTCH	
R	19	1	**3P-7447**	2	PLATE-CLUTCH	
	20	1	**6Y-3484**	2	BALL BEARING	
	21	1	**6V-0836**	2	RING-RETAINING	
	22	1	**9W-6991**	2	RING-SEAL	
	23	1	**8S-9191**	20	BOLT (3/8-16X4 IN)	
	24	1	**110-9276**	1	HOUSING AS-ROTATION	
		1	**4S-8537**	1	DOWEL	
	25	1	**6B-6863**	1	PIN-SPRING	
	26	1	**6P-7564**	1	CARRIER-RING	
	27	1	**112-4509**	1	BEARING-SLEEVE	
	28	1	**110-9274**	1	HOUSING AS	
	29	1	**8B-1312**	3	DOWEL	
	30	1	**1P-9261**	1	SEAL-RING	
	31	1	**3P-2792**	1	SEAL-RING	
	32	1	**153-5482**	1	PISTON-CLUTCH	
	33	1	**110-9283**	3	SPRING-DISC	
	34	1	**110-9282**	1	PLATE-RETAINER	
	35	1	**2S-8939**	1	RING-RETAINING	
	36	1	**6I-9255**	6	DISC-FRICTION	
R	37	1	**3P-7489**	5	PLATE-CLUTCH	
	38	1	**110-9284**	1	GEAR-RING (90 TEETH)	
	39	1	**5P-3414**	1	RING-RETAINING	
	40	1	**110-9272**	1	HUB AS	
		1	**4S-8537**	1	DOWEL	
	41	1	**110-9258**	1	CARRIER-PLANETARY	
	42	1	**6P-6739**	5	SHAFT-PLANETARY	
	43	1	**3S-2708**	5	PIN-SPRING	
	44	1	**8E-8304**	10	DISC-THRUST	
	45	1	**5M-6126**	5	BEARING	
	46	1	**7G-2476**	5	GEAR-PLANET (20 TEETH)	
	47	1	**108-2735**	1	RING-LOCK	
	48	1	**110-9262**	1	GEAR-SUN (50 TEETH)	
	49	1	**9M-1503**	1	RING-METAL SEAL	
	50	1	**5M-6187**	1	RING-METAL SEAL	
	51	1	**110-9280**	1	SHAFT AS-OUTPUT	
	52	1	**3P-3103**	1	CARRIER-RING	
	53	1	**111-8919**	1	BEARING-ROLLER	
	54	1	**9M-4355**	21	DAMPER-BOLT	

110-9295 PLANETARY GP-TRANSMISSION *(contd.)* i01743037

NOTE	REF NO	GRAPHIC REF	PART NUMBER	QTY	PART NAME 1 2 3 4 5 6 (PRODUCT LEVEL)	SEE PAGE
	55	2	**114-4654**	6	DOWEL-REACTION	
	56	2	**110-9285**	1	GEAR-RING (79 TEETH)	
	57	2	**110-9255**	1	HOUSING-CLUTCH	
	58	2	**8F-8544**	2	BOLT (3/8-16X6.25 IN)	
	59	2	**7G-4817**	1	RING-SEAL	
	60	2	**3P-7570**	1	RING-SEAL	
	61	2	**153-5480**	1	PISTON-CLUTCH	
	62	2	**9W-9856**	7	DISC AS-FRICTION	
R	63	2	**3P-7447**	14	PLATE-CLUTCH	
	64	2	**110-9288**	1	GEAR-RING (79 TEETH)	
	65	2	**095-7950**	1	RING-RETAINING	
	66	2	**111-8920**	2	BALL BEARING	
	67	2	**5M-4480**	2	RING-RETAINING	
	68	2	**8M-4395**	2	SEAL-O-RING	
	69	2	**110-9281**	1	SHAFT-TRANSMISSION INPUT	
	70	2	**132-5538**	1	GEAR-SUN (36 TEETH)	
	71	2	**3P-3321**	2	SEAL-METAL RING	
	72	2	**110-9287**	5	SHAFT-PLANETARY	
	73	2	**3S-2708**	5	PIN-SPRING	
	74	2	**8E-8310**	30	DISC-THRUST	
	75	2	**112-4511**	5	PIN-SPRING	
	76	2	**110-9286**	10	GEAR-PLANET (22 TEETH)	
	77	2	**110-9251**	1	CARRIER-PLANETARY	
	78	2	**108-2736**	2	RING-LOCK	
	79	2	**169-7055**	4	DISC-CLUTCH	
	80	2	**9W-5768**	1	GEAR-RING (86 TEETH)	
	81	2	**0S-1608**	2	BOLT (3/8-16X3.75 IN)	
	82	2	**110-9248**	1	PLATE AS	
		2	**8T-1444**	2	DOWEL	
		2	**7M-8480**	1	DOWEL	
		2	**110-9246**	1	PLATE-CENTER	
	83	2	**8P-0056**	2	SLEEVE	
	84	2	**110-9245**	1	HOUSING AS-CLUTCH	
	85	2	**9S-1343**	2	PLUG-CUP	
	86	2	**114-4652**	12	SPRING	
	87	2	**8E-2729**	6	DISC AS-FRICTION	
	88	2	**6V-0836**	1	RING-RETAINING	
	89	2	**6Y-3484**	1	BALL BEARING	
	90	2	**132-5546**	1	GEAR-SUN (34 TEETH)	
	91	2	**8P-4617**	1	SEAL-METAL RING	
	92	2	**110-9243**	1	CARRIER AS	
		2	**4S-8537**	1	DOWEL	
	93	2	**8P-4047**	5	SHAFT-PLANETARY	
	94	2	**8T-1141**	1	RING-RETAINING	
	95	2	**5P-6254**	15	BEARING	
	96	2	**9G-1919**	5	GEAR-PLANET (25 TEETH)	
	97	2	**6F-0156**	2	RING-METAL SEAL	
	98	2	**6P-3458**	1	SPACER (21.79X30X3.66MM THK)	
	99	2	**8M-5661**	1	SEAL-O-RING	
	100	2	**2D-5658**	1	BALL BEARING	
	101	2	**8C-6761**	1	RING-RETAINING	
	102	2	**8K-2692**	1	RING-RETAINING	
	103	2	**110-9289**	1	GEAR-RING	
	104	2	**153-5479**	1	PISTON-CLUTCH	
	105	2	**3P-2793**	1	SEAL-RING	
	106	2	**7G-4818**	1	RING-SEAL	
	107	2	**5C-3240**	12	ROD	

R-REMFG PART MAY BE AVAILABLE

110-9295 **PLANETARY GP-TRANSMISSION** *(contd.)* **i01743037**

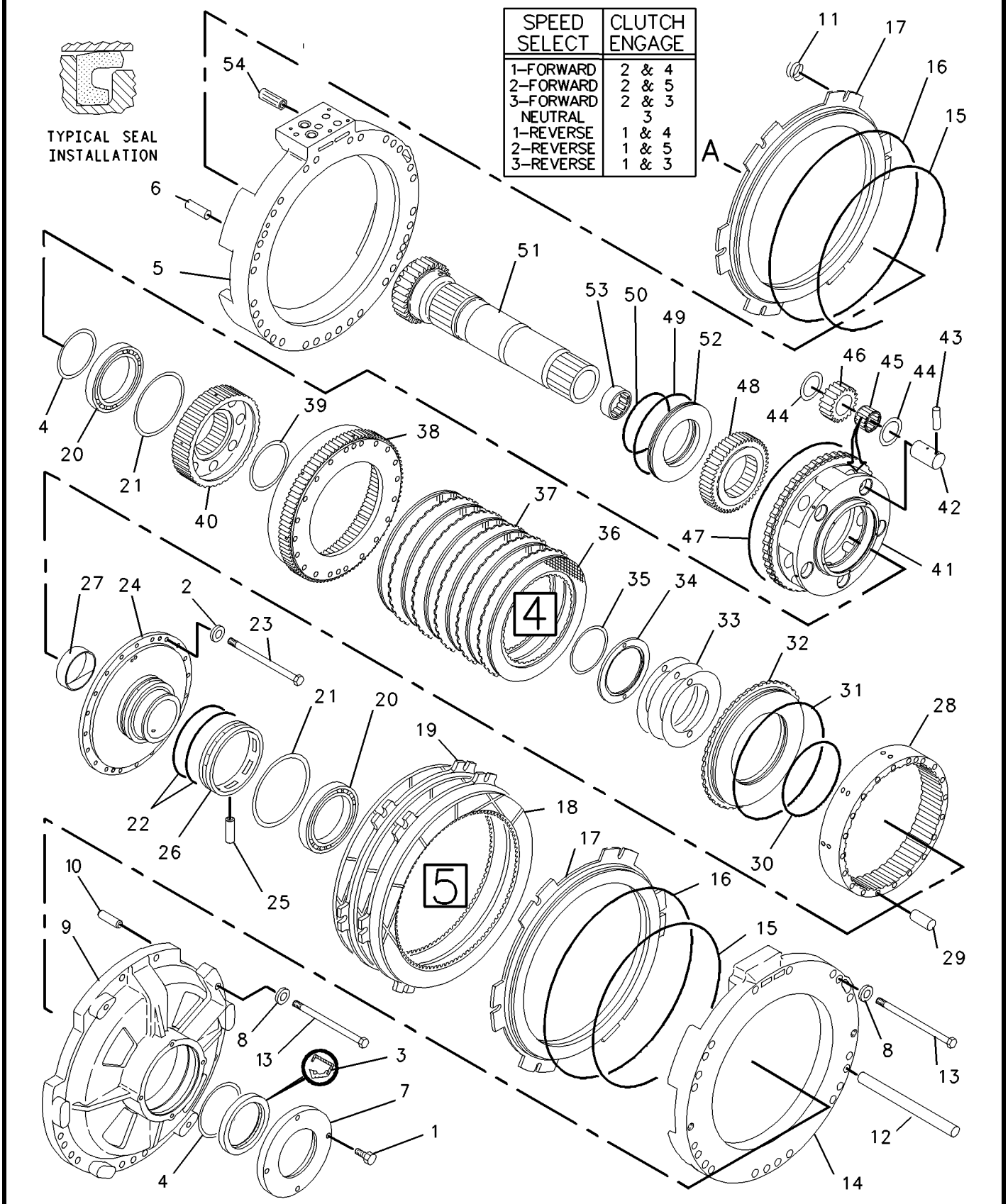

GRAPHIC #1 g00663794

110-9295 **PLANETARY GP-TRANSMISSION** *(contd.)* **i01743037**

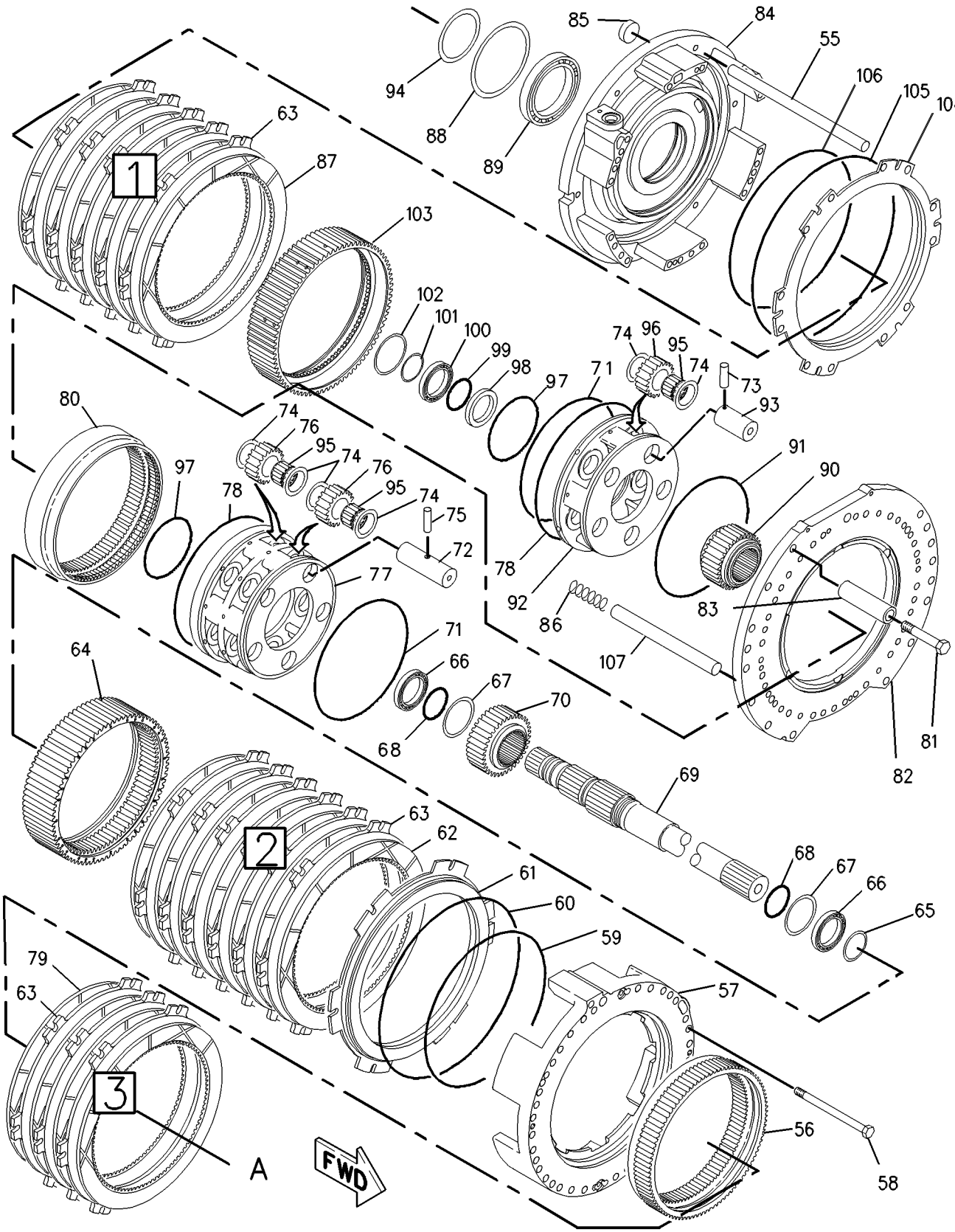

GRAPHIC #2 g00663798

POWER TRAIN

9T-9840 PUMP GP-GEAR

S/N: 3KR1-UP
PART OF 127-8928 PUMP & LINES AR
AN ATTACHMENT

SMCS-3115, 3153 **i01743072**

NOTE	REF NO	GRAPHIC REF	PART NUMBER	QTY	PART NAME 1 2 3 4 5 6 (PRODUCT LEVEL)	SEE PAGE
	1	1	**0S-1566**	8	BOLT (5/8-11X1.5 IN)	
	2	1	**0T-0167**	4	STUD	
	3	1	**8H-5724**	8	NUT (1/2-20 THD)	
	4	1	**5P-7213**	16	WASHER-HARD (13.5X20.5X2MM THK)	
	5	1	**2H-3046**	4	STUD	
	6	1	**3G-7242**	1	PLUG	
	7	1	**8C-8817**	8	LOCKNUT-12 POINT (HIGH TEMPERATURE)	
		1	**1A-2330**	8	STUD	
J	8	1	**6V-1899**	2	SEAL-LIP	
	9	1	**008-3214**	1	RING-RETAINING (INTERNAL)	
	10	1	**5S-1522**	1	RING-SNAP	
	11	1	**6E-1821**	1	COUPLING (REAR)	
	12	1	**8J-9212**	1	COUPLING-SPLINE (FRONT)	
					AVAILABLE REPAIR KIT(S):	
			6E-1822	1	KIT-FRONT SECTION	
			6E-1823	1	KIT-CENTER SECTION	
			6E-1824	1	KIT-REAR SECTION	
J			**6E-1825**	1	KIT-SEAL	

J-KIT MARKED J INCLUDES PART MARKED J

9T-9840 PUMP GP-GEAR *(contd.)* **i01743072**

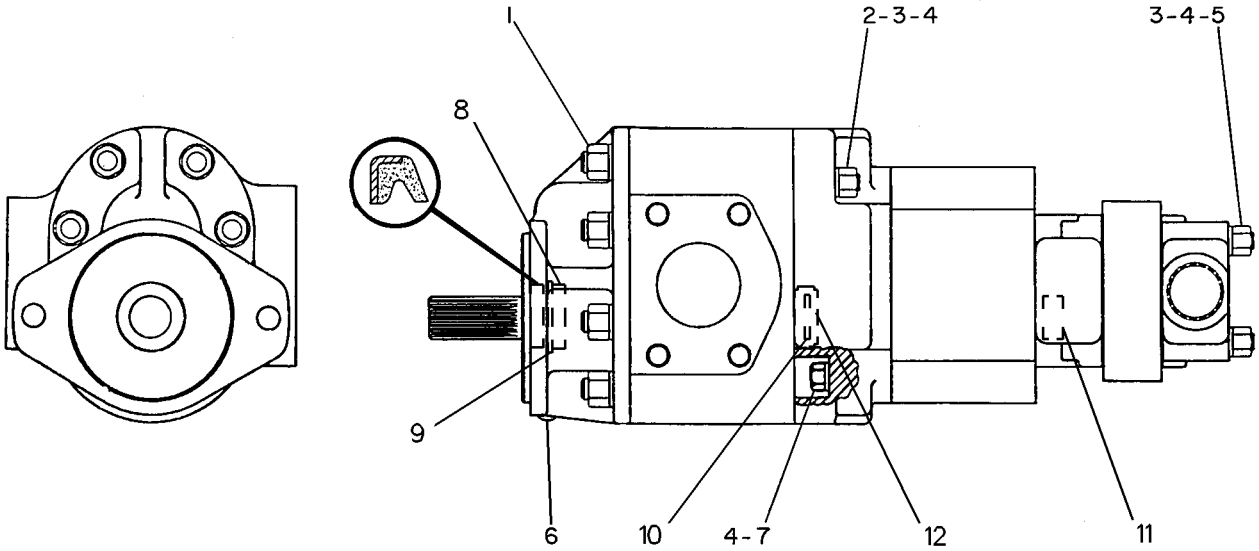

GRAPHIC #1 g00215934

POWER TRAIN

116-9526 PUMP GP-GEAR

S/N: 3KR1-UP

PART OF 132-3629 PUMP GP-GEAR

SMCS-3115, 3153 **i01743103**

NOTE	REF NO	GRAPHIC REF	PART NUMBER	QTY	PART NAME 1 2 3 4 5 6 (PRODUCT LEVEL)	SEE PAGE
	1	1	**0L-1143**	2	BOLT (3/8-16X2.50 IN)	
	2	1	**129-1609**	2	SEAL-O-RING	
	3	1	**116-9530**	1	BODY-OIL PUMP	
	4	1	**123-3474**	1	ADAPTER-PORT	
	5	1	**3P-0747**	2	GEAR-OIL PUMP (12 TEETH)	
	6	1	**117-4725**	1	GEAR AS-OIL PUMP (8 TEETH)	
	7	1	**1B-8736**	1	KEY-WOODRUFF	
	8	1	**117-4722**	1	GEAR AS-OIL PUMP (8 TEETH)	
	9	1	**3S-0004**	4	WASHER (0.406X0.728X0.09 IN THK)	
	10	1	**1A-5964**	4	BOLT (3/8-16X4.5 IN)	
	11	1	**121-0145**	5	SEAL-O-RING	
	12	1	**9S-4191**	2	PLUG	
	13	1	**3J-1907**	2	SEAL-O-RING	
	14	1	**116-9533**	1	BODY AS-OIL PUMP	
	15	1	**8M-8489**	4	DOWEL	
	16	1	**9M-4370**	2	BEARING	
	17	1	**116-5288**	1	COVER AS-OIL PUMP	
	18	1	**9M-4370**	2	BEARING	
	19	1	**8M-8489**	2	DOWEL	

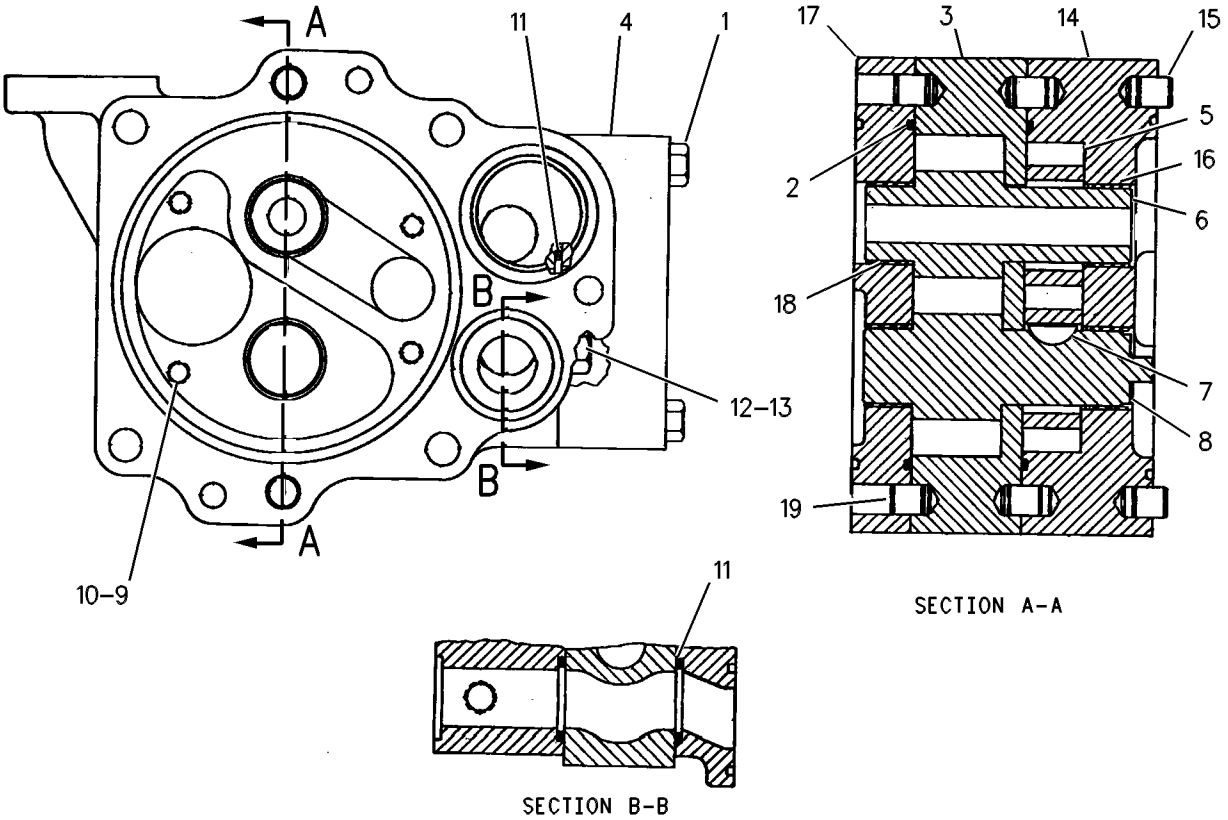

GRAPHIC #1 g00344477

POWER TRAIN

132-3629 PUMP GP-GEAR

S/N: 3KR1-UP

PART OF 118-2486 LINES GP-POWER TRAIN OIL

SMCS-3115, 3153 **i01743100**

NOTE	REF NO	GRAPHIC REF	PART NUMBER	QTY	PART NAME 1 2 3 4 5 6 (PRODUCT LEVEL)	SEE PAGE
Y	1	1	**116-9526**	1	PUMP GP-GEAR	636
Y	2	1	**132-3630**	1	PUMP GP-GEAR	638
	3	1	**121-0145**	2	SEAL-O-RING	
	4	1	**1A-0168**	4	BOLT (1/2-13X7.5 IN)	
	5	1	**2M-0849**	4	WASHER-HARD (13.5X25.5X5MM THK)	
	6	1	**7G-2248**	1	CAGE-BEARING	
	7	1	**6L-4784**	4	BOLT-12 POINT HEAD (5/16-18X1.75 IN)	
	8	1	**9M-1974**	4	WASHER-HARD (8.8X16X2MM THK)	
	9	1	**3T-5355**	1	FLANGE	
	10	1	**5H-4279**	1	PLUG-CUP	
	11	1	**111-4919**	1	SEAL-LIP TYPE	
	12	1	**1B-5675**	1	BALL BEARING AS	
	13	1	**2H-3931**	1	SEAL-O-RING	
	14	1	**2M-3974**	1	RING-RETAINING	
	15	1	**129-1610**	1	SEAL-O-RING	
	16	1	**1A-2029**	2	BOLT (3/8-16X1.125 IN)	
	17	1	**5M-2894**	2	WASHER-HARD (10.2X18.5X2.5MM THK)	

Y-SEPARATE ILLUSTRATION

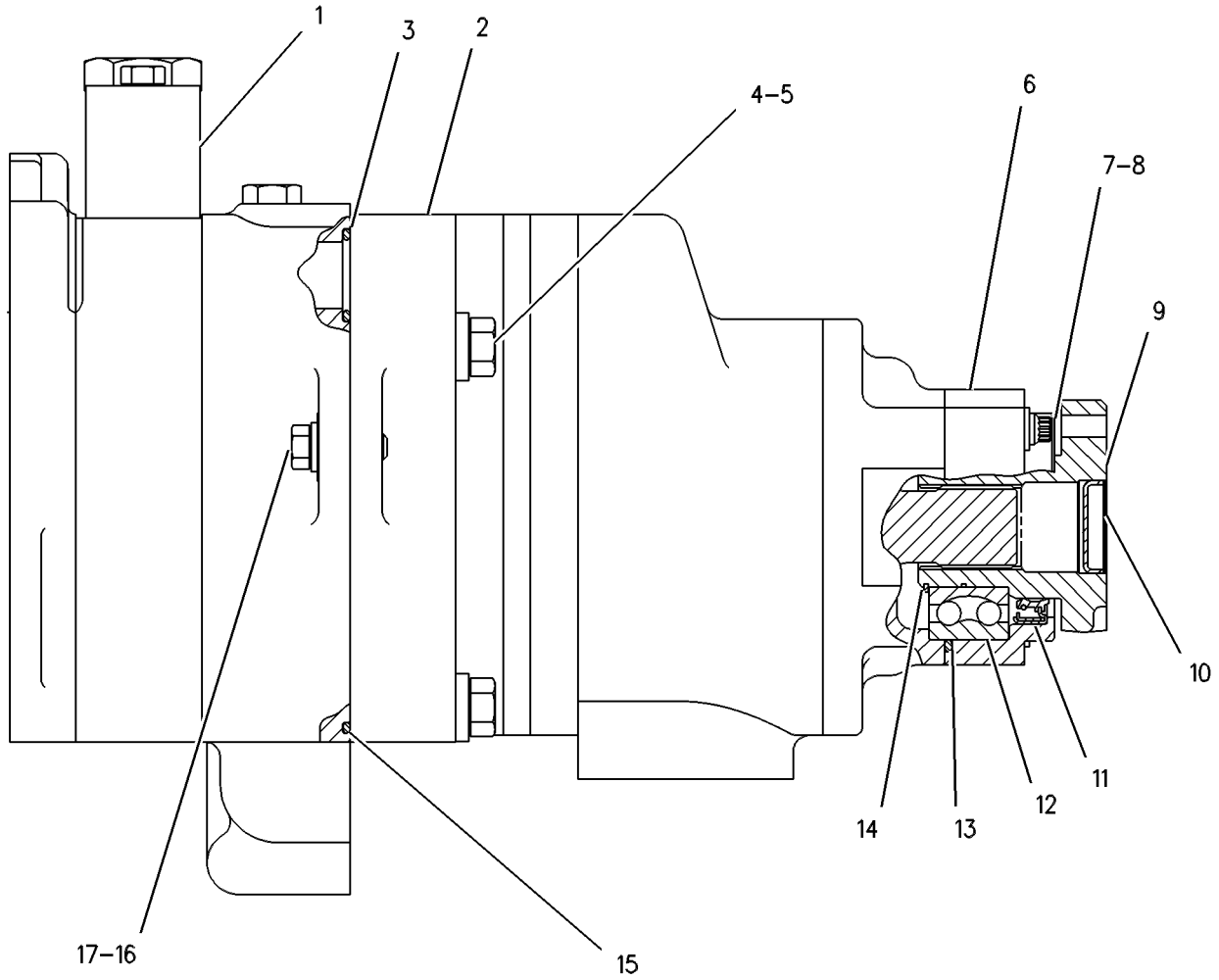

GRAPHIC #1 g00258598

POWER TRAIN

132-3630 PUMP GP-GEAR

S/N: 3KR1-UP

PART OF 132-3629 PUMP GP-GEAR

SMCS-3115, 3153 **i01743106**

NOTE	REF NO	GRAPHIC REF	PART NUMBER	QTY	PART NAME 1 2 3 4 5 6 (PRODUCT LEVEL)	SEE PAGE
	1	1	**132-3631**	1	COVER AS-OIL PUMP	
	2	1	**131-0167**	2	BEARING-SLEEVE	
	3	1	**3T-3665**	1	SPACER-OIL PUMP	
	4	1	**132-3636**	1	BODY AS	
		1	**1M-3909**	2	BEARING-SLEEVE	
		1	**8M-8489**	2	DOWEL	
	5	1	**9F-8999**	6	BOLT (3/8-16X7 IN)	
	6	1	**3S-0004**	6	WASHER (0.406X0.728X0.09 IN THK)	
	7	1	**7G-2250**	1	COVER AS-OIL PUMP	
	8	1	**1M-3780**	2	BEARING-SLEEVE	
	9	1	**129-1609**	5	SEAL-O-RING	
	10	1	**3T-3663**	4	GEAR-OIL PUMP (8 TEETH)	
	11	1	**1B-8705**	2	KEY-WOODRUFF	
	12	1	**132-4924**	1	SHAFT AS-OIL PUMP	
	13	1	**121-0145**	4	SEAL-O-RING	
	14	1	**132-3634**	2	BODY AS-OIL PUMP	
					(EACH INCLUDES)	
		1	**5M-3605**	2	DOWEL	
	15	1	**132-3638**	1	SHAFT AS-OIL PUMP	

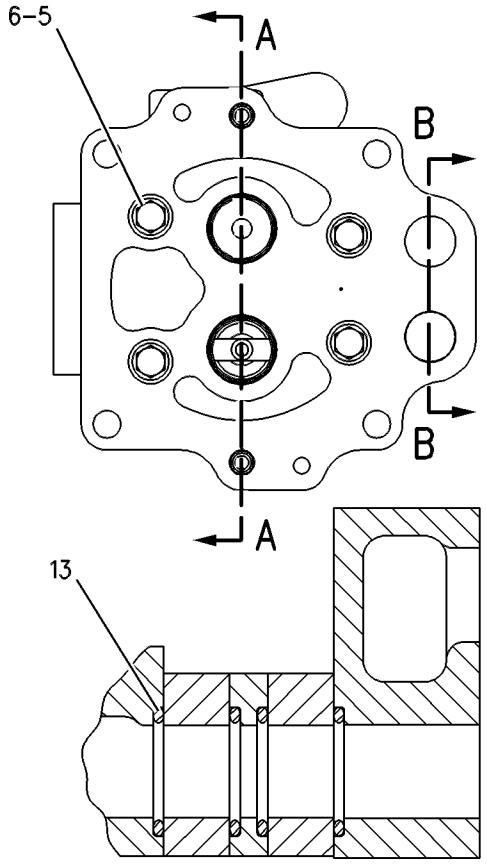

SECTION B-B

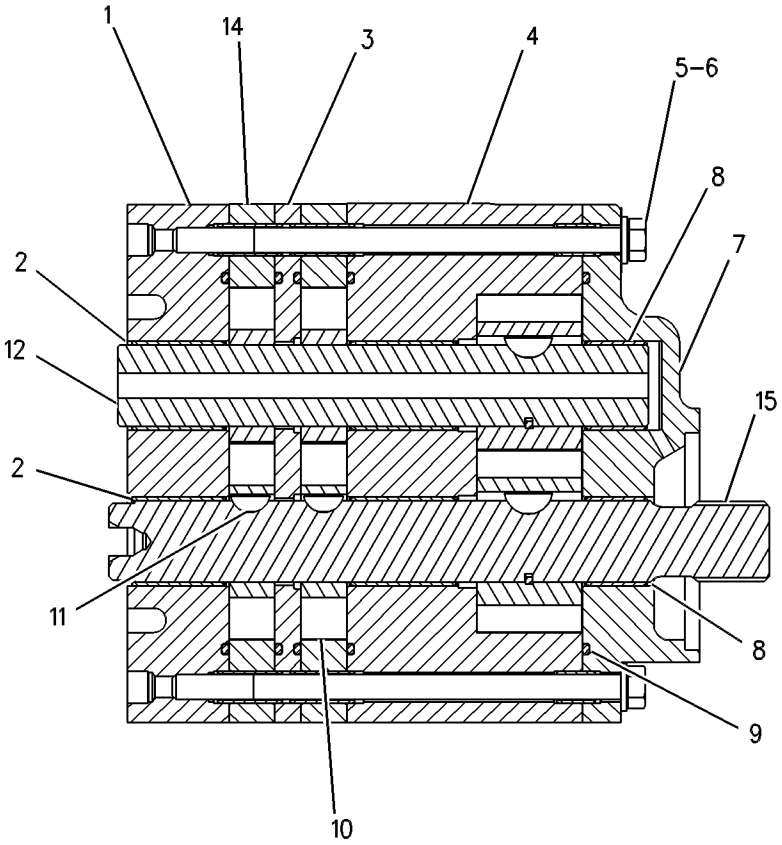

SECTION A-A

GRAPHIC #1 g00344480

POWER TRAIN

6T-9538 SEGMENT GP-SPROCKET

S/N: 3KR1-UP

PART OF 110-2655, 110-2780, 127-1806, 143-7547 FINAL DRIVE GP

ALSO AN ATTACHMENT

SMCS-4155 **i01401465**

NOTE	REF NO	GRAPHIC REF	PART NUMBER	QTY	PART NAME 1 2 3 4 5 6 (PRODUCT LEVEL)	SEE PAGE
	1	1	**173-0950**	5	SEGMENT-SPROCKET	
	2	1	**2M-5656**	30	NUT (1-14 THD)	
	3	1	**5P-8250**	30	WASHER (28X49X5MM THK)	
	4	1	**5P-5422**	30	BOLT (1-14X3.64 IN)	

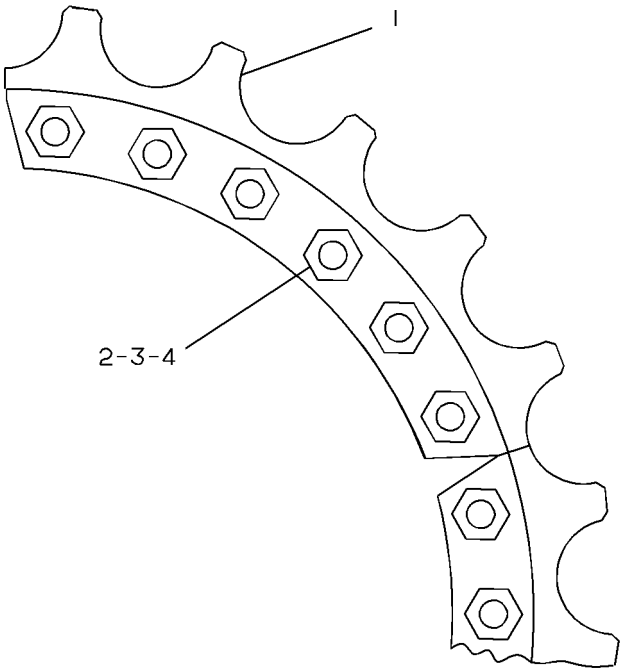

GRAPHIC #1 g00182496

POWER TRAIN

160-4928 SEGMENT GP-SPROCKET

S/N: 3KR1-UP

PART OF 110-2655, 110-2780, 143-7547, 192-0722 FINAL DRIVE GP

ALSO AN ATTACHMENT

SMCS-4155 **i01401469**

NOTE	REF NO	GRAPHIC REF	PART NUMBER	QTY	PART NAME 1 2 3 4 5 6 (PRODUCT LEVEL)	SEE PAGE
	1	1	**2M-5656**	30	NUT (1-14 THD)	
	2	1	**5P-5422**	30	BOLT (1-14X3.64 IN)	
	3	1	**129-9208**	5	SEGMENT-SPROCKET	
	4	1	**5P-8250**	30	WASHER (28X49X5MM THK)	

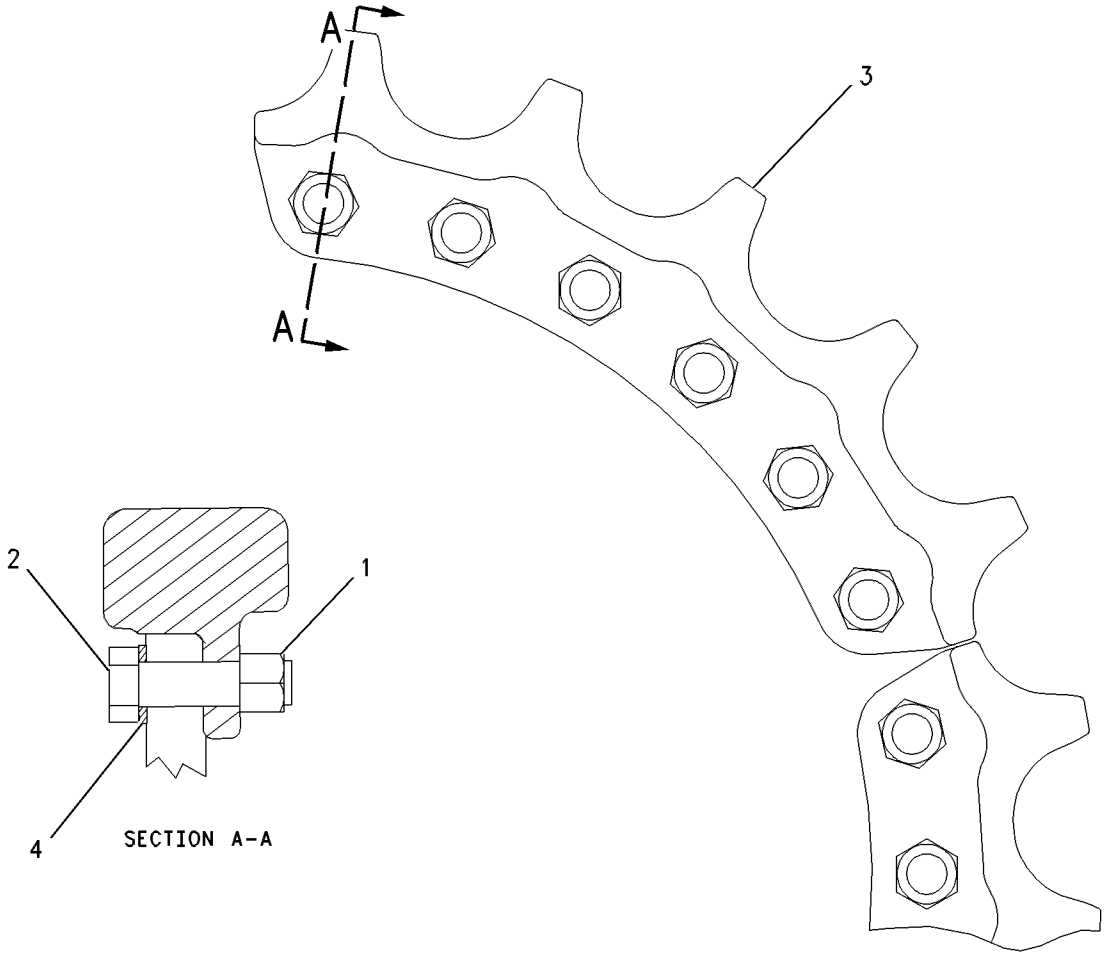

GRAPHIC #1 g00602916

POWER TRAIN

110-2619 SHAFT GP-MAIN DRIVE

S/N: 3KR1-UP

SMCS-3253 **i00601441**

NOTE	REF NO	GRAPHIC REF	PART NUMBER	QTY	PART NAME 1 2 3 4 5 6 (PRODUCT LEVEL)	SEE PAGE
	1	1	**0S-1604**	8	BOLT (1/2-20X2.5IN)	
Y	2	1	*110-2627*	1	UNIVERSAL JOINT GP	649
	3	1	**5D-6657**	1	RACE	
	4	1	**110-9311**	1	YOKE AS	
	5	1	**4F-8503**	1	PLUG-CUP	

Y-SEPARATE ILLUSTRATION

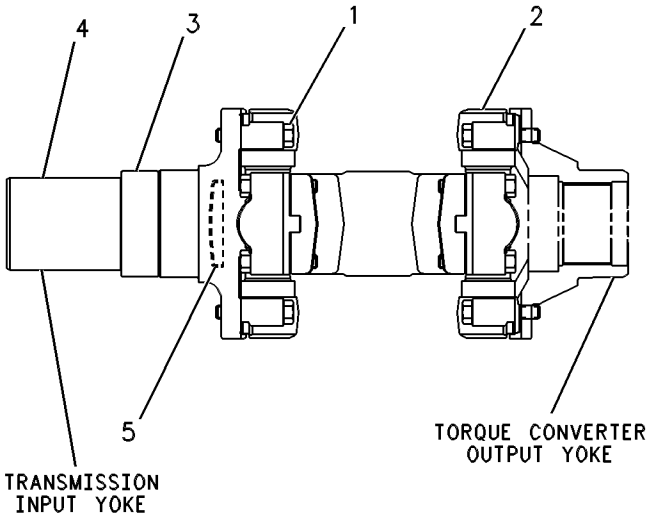

GRAPHIC #1 g00252798

POWER TRAIN

110-2767 TORQUE CONVERTER GP

S/N: 3TT1-UP

PART OF 110-2768 TORQUE CONVERTER GP

SMCS-3101, 3102, 3105, 3127, 3128, 3129, 3130, 3131, 3134, 3135, 3136

i01743108

NOTE	REF NO	GRAPHIC REF	PART NUMBER	QTY	PART NAME 1 2 3 4 5 6 (PRODUCT LEVEL)	SEE PAGE
	1	1	**8P-8780**	1	HOUSING	
	2	1	**7G-5578**	1	FLANGE AS	
		1	**3J-1907**	2	SEAL-O-RING	
		1	**9M-4007**	2	DOWEL	
		1	**9S-4191**	2	PLUG	
	3	1	**4F-2041**	1	CUP-BEARING	
	4	1	**7G-6114**	1	SLEEVE-WEAR	
	5	1	**7G-6059**	1	CARRIER-RING	
	6	1	**7G-6115**	1	PLATE-THRUST	
	7	1	**2L-3650**	5	PIN-SPRING	
	8	1	**6H-1717**	36	BOLT (1/2-13X1.125 IN)	
	9	1	**5P-8245**	36	WASHER-HARD (13.5X25.5X3MM THK)	
	10	1	**6H-3956**	1	PIN	
	11	1	**3T-3811**	1	SUPPORT-STATOR	
	12	1	**9W-6991**	1	RING-SEAL	
	13	1	**1A-5822**	12	BOLT (1/2-13X2.75 IN)	
	14	1	**2D-9457**	1	CONE-BEARING	
	15	1	**7T-6992**	1	IMPELLER-CONVERTER	
	16	1	**1A-2029**	44	BOLT (3/8-16X1.125 IN)	
	17	1	**5M-2894**	44	WASHER-HARD (10.2X18.5X2.5MM THK)	
	18	1	**7G-5671**	1	HUB-IMPELLER	
	19	1	**8P-5229**	1	CARRIER-STATOR	
	20	1	**8P-9266**	1	STATOR-CONVERTER	
	21	1	**1T-0229**	1	LOCKNUT-BEARING	
	22	1	**1T-0242**	1	LOCKWASHER-BEARING	
	23	1	**5P-6393**	2	RING-RETAINING	
	24	1	**8P-6817**	1	HUB	
	25	1	**6P-3904**	1	RETAINER-BEARING	
	26	1	**6P-9163**	1	CARRIER-RING	
	27	1	**6Y-5793**	1	RING-SEAL	
	28	1	**106-7098**	1	FLANGE AS	
		1	**1T-0278**	2	BEARING-SLEEVE	
	29	1	**1T-0610**	1	BALL BEARING	
	30	1	**8P-9265**	1	TURBINE-CONVERTER	
	31	1	**1T-0241**	1	SETSCREW	

110-2767 **TORQUE CONVERTER GP** *(contd.)* **i01743108**

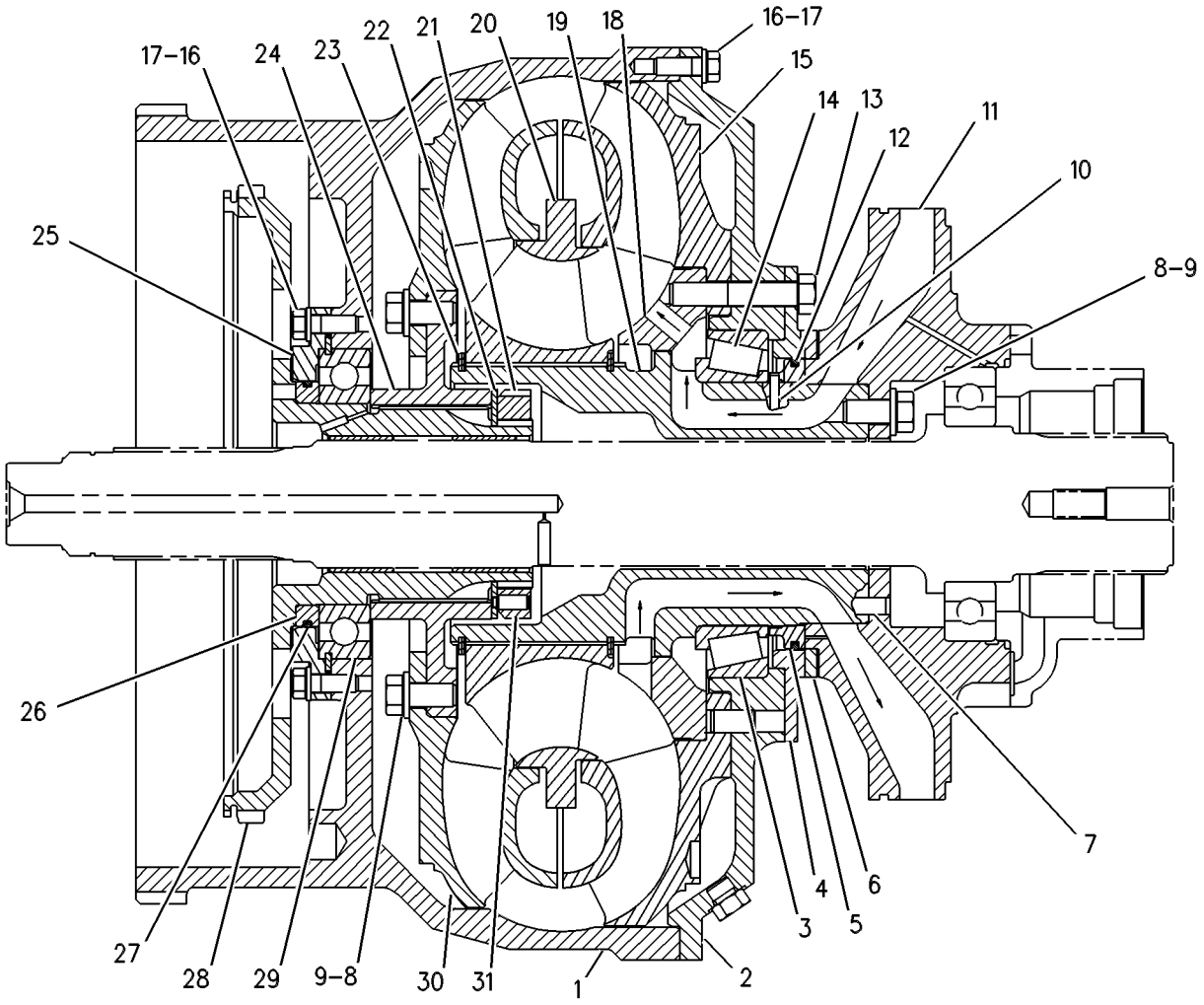

GRAPHIC #1 g00350310

POWER TRAIN

110-2768 TORQUE CONVERTER GP

S/N: 3TT1-UP

PART OF 110-2769 TORQUE CONVERTER GP

SMCS-3101, 3102, 3105, 3127, 3128, 3129, 3130, 3131, 3134, 3135, 3136

i01743110

NOTE	REF NO	GRAPHIC REF	PART NUMBER	QTY	PART NAME 1 2 3 4 5 6 (PRODUCT LEVEL)	SEE PAGE
Y	1	1	*110-2767*	1	TORQUE CONVERTER GP	642
	2	1	**5H-8985**	2	PIN-SPRING	
	3	1	**9M-2076**	1	RING-SNAP	
	4	1	**9M-2074**	1	GEAR-RING (106 TEETH)	
	5	1	**106-7099**	1	CARRIER-PLANETARY	
	6	1	**6L-6560**	1	RING-RETAINING	
	7	1	**9P-4057**	1	SPACER (58X63.50X9.08MM THK)	
	8	1	**8J-8322**	1	RING-RETAINING	
	9	1	**117-5792**	1	SHAFT-OUTPUT	
	10	1	**5P-5405**	1	RACE-BEARING INNER	
	11	1	**6V-9176**	1	BALL BEARING	
	12	1	**8E-8316**	6	DISC-THRUST	
	13	1	**7G-5622**	3	GEAR-PLANETARY (35 TEETH)	
	14	1	**1S-9110**	3	ROLLER AS	
	15	1	**3S-2708**	3	PIN-SPRING	
	16	1	**1T-0141**	1	RING-METAL SEAL	
	17	1	**8M-5253**	1	SEAL-O-RING	
	18	1	**6Y-5888**	1	RING-SEAL	
	19	1	**117-5794**	1	RETAINER-BEARING	
	20	1	**8P-5056**	1	CARRIER-RING	
	21	1	**1A-2029**	8	BOLT (3/8-16X1.125 IN)	
	22	1	**5M-2894**	8	WASHER-HARD (10.2X18.5X2.5MM THK)	
	23	1	**8F-8733**	1	SEAL-O-RING	
	24	1	**6P-3901**	3	SHAFT AS	
					(EACH INCLUDES)	
	25	1	**2A-3746**	1	PLUG-CUP	

Y-SEPARATE ILLUSTRATION

110-2768 TORQUE CONVERTER GP *(contd.)* **i01743110**

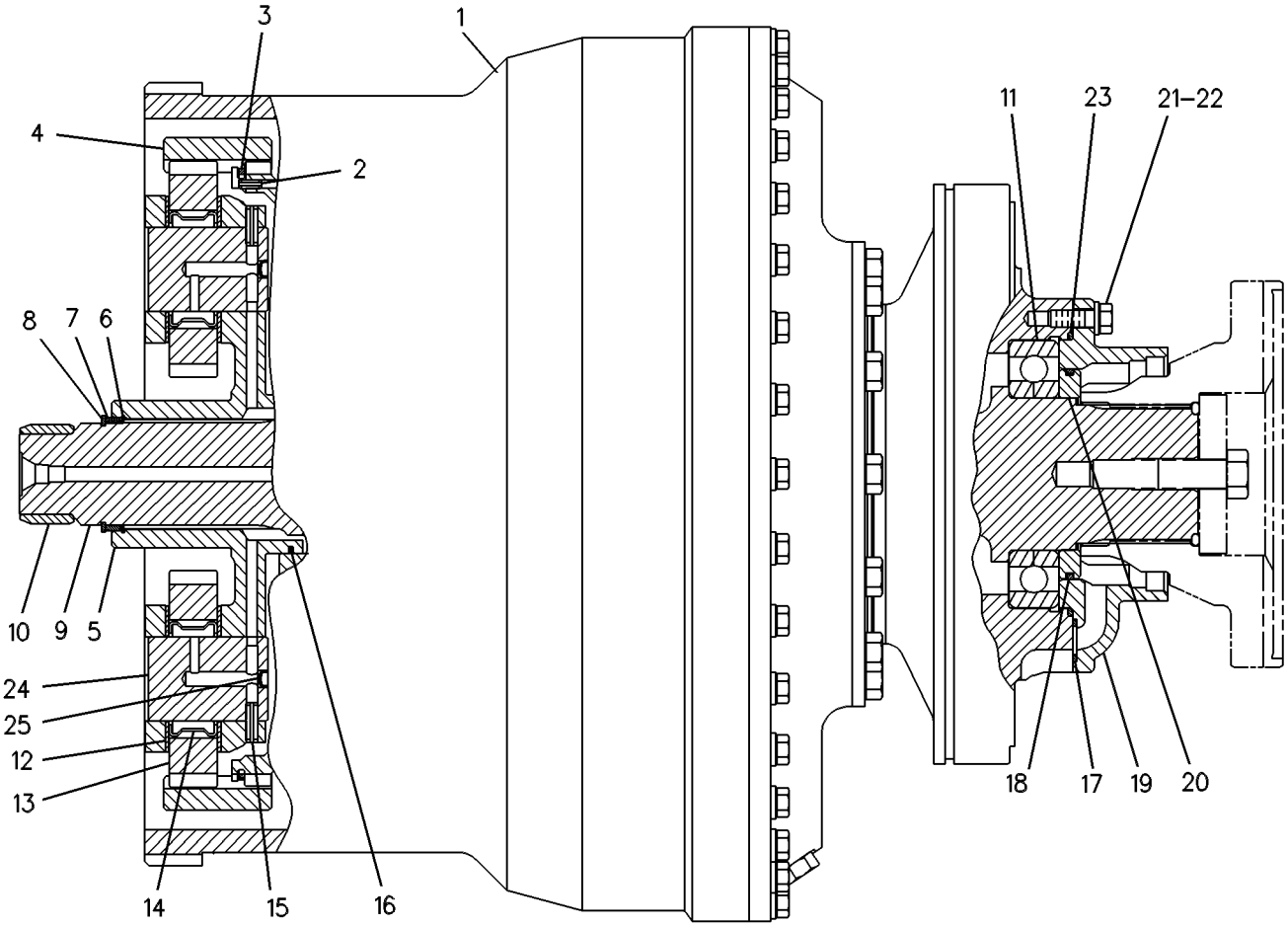

GRAPHIC #1 g00350311

POWER TRAIN

110-2769 TORQUE CONVERTER GP*R

S/N: 3KR1-UP

SMCS-3101, 3102, 3105, 3127, 3128, 3129, 3130, 3131, 3134, 3135, 3136 **i01743113**

NOTE	REF NO	GRAPHIC REF	PART NUMBER	QTY	PART NAME 1 2 3 4 5 6 (PRODUCT LEVEL)	SEE PAGE
	1	1	**1S-8385**	1	RING-RETAINING	
	2	1	**8E-7838**	1	GEAR-SUN (35 TEETH)	
	3	1	**2K-5254**	1	BEARING-OUTER	
	4	1	**4M-8910**	1	RING-RETAINING	
	5	1	**0S-1585**	12	BOLT (1/2-13X1.50 IN)	
		1	**5P-8245**	12	WASHER-HARD (13.5X25.5X3MM THK)	
	6	1	**7G-3441**	1	COVER	
Y	7	1	**110-2768**	1	TORQUE CONVERTER GP	644
	8	1	**2D-6533**	2	SEAL-O-RING	
	9	1	**174-3777**	1	YOKE	
	10	1	**8M-4989**	1	SEAL-O-RING	
		1	**9S-4372**	1	RETAINER	
	11	1	**9S-4191**	1	PLUG	
		1	**3J-1907**	1	SEAL-O-RING	
	12	1	**1B-4367**	1	BOLT (5/8-11X3 IN)	
	13	1	**8T-2501**	4	BOLT (3/8-16X2 IN)	
	14	1	**8T-4896**	1	WASHER-HARD (10.2X18.5X2.5MM THK)	
Y	15	1	**106-4150**	1	DRAIN GP-ECOLOGY	548
	16	1	**8S-9130**	1	SCREEN-SUCTION	
	17	1	**5S-7379**	1	BOLT (3/8-16X0.875 IN)	
	18	1	**6P-8340**	1	SLEEVE	
	19	1	**6P-8339**	1	LOCK	
	20	1	**8M-4433**	2	SEAL-O-RING	
	21	1	**3D-8241**	1	SEAL-O-RING	
	22	1	**117-7127**	1	SEAL-LIP TYPE	
	23	1	**8T-8919**	1	BOLT (1/2-13X1.75 IN)	
	24	1	**5P-2566**	11	BOLT (1/2-13X1.5 IN)	
	25	1	**8T-4223**	12	WASHER-HARD (13.5X25.5X3MM THK)	
	26	1	**2B-0858**	1	PLUG-PIPE	
	27	1	**6L-9965**	1	SEAL-O-RING	

Y-SEPARATE ILLUSTRATION

110-2769 **TORQUE CONVERTER GP** *(contd.)* **i01743113**

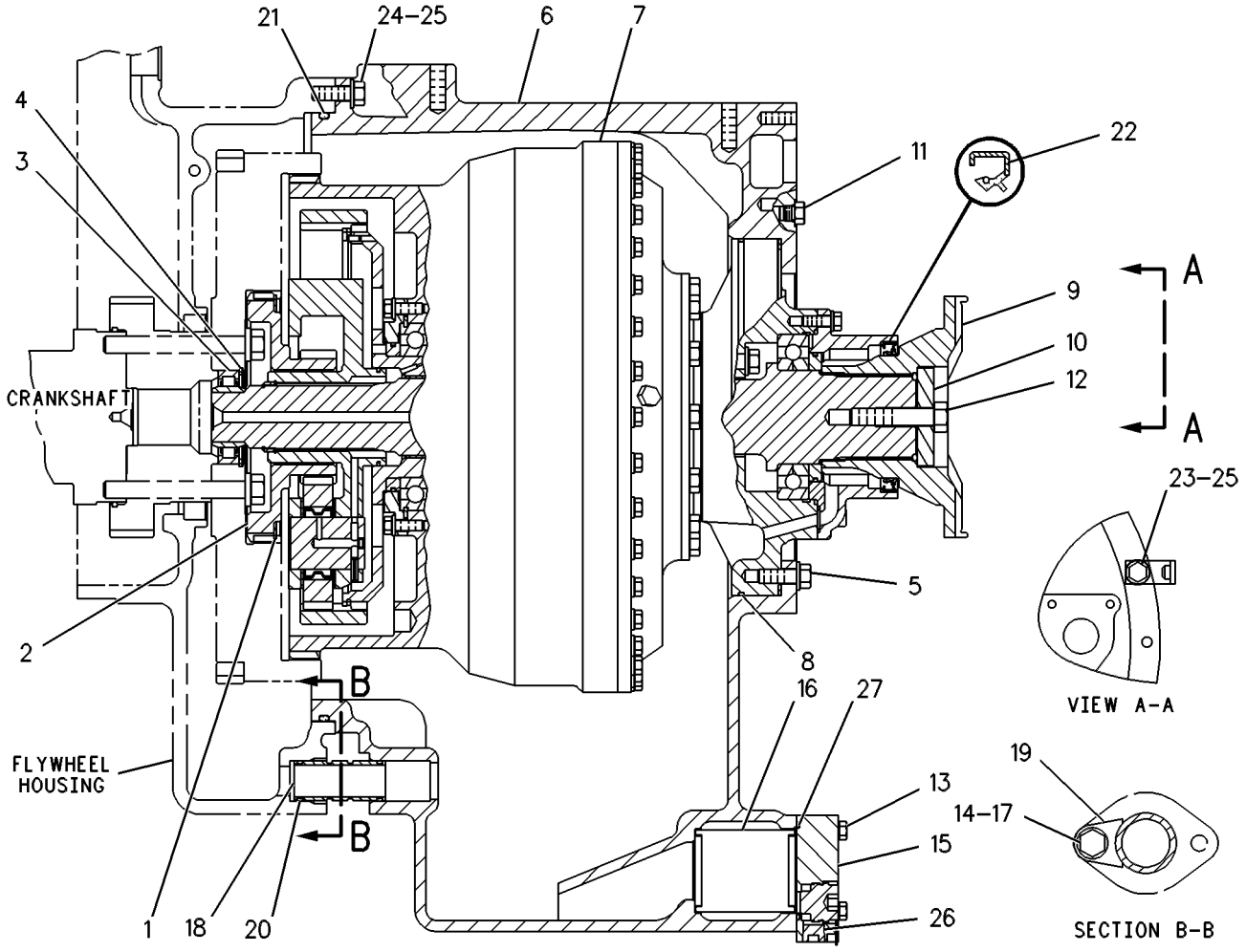

GRAPHIC #1 g00252728

POWER TRAIN

110-9296 TRANSMISSION AR*R

S/N: 1LY1-UP

SMCS-3030, 3060, 3160 **i01401494**

NOTE	PART NUMBER	QTY	PART NAME 1 2 3 4 5 6 (PRODUCT LEVEL)	SEE PAGE
Y	*110-9293*	1	CASE & PARTS GP-PLANETARY	536
Y	*113-8276*	1	CONTROL GP-TRANSMISSION HYD	540
Y	*110-9292*	1	GEAR GP-BEVEL & TRANSFER	598
Y	*110-9295*	1	PLANETARY GP-TRANSMISSION	630

Y-SEPARATE ILLUSTRATION

<END>

POWER TRAIN

110-2627 UNIVERSAL JOINT GP

S/N: 3KR1-UP

PART OF 110-2619 SHAFT GP-MAIN DRIVE

SMCS-3251, 3253 **i00601454**

NOTE	REF NO	GRAPHIC REF	PART NUMBER	QTY	PART NAME 1 2 3 4 5 6 (PRODUCT LEVEL)	SEE PAGE
	1	1	**110-2628**	1	YOKE-COUPLING	
	2	1	**8W-9912**	2	SPIDER & BEARING GP	
	3	1	**0S-1604**	8	BOLT (1/2-20X2.5IN)	

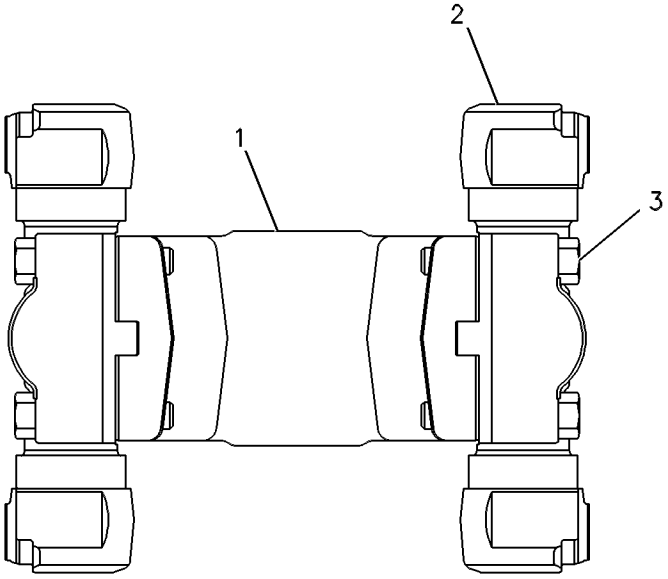

GRAPHIC #1 g00252800

POWER TRAIN

115-7414 VALVE & MTG GP-PILOT

S/N: 3KR1-1604

SMCS-5059 **i01565051**

NOTE	REF NO	GRAPHIC REF	PART NUMBER	QTY	PART NAME 1 2 3 4 5 6 (PRODUCT LEVEL)	SEE PAGE
Y	1	1	**133-3255**	1	VALVE GP-CONTROL	652
	2	1	**1A-5183**	4	BOLT (3/8-16X4.75 IN)	
	3	1	**9S-1018**	8	WASHER (9.73X19.05X.84MM THK)	
	4	1	**3S-0004**	4	WASHER (0.406X0.728X0.09 IN THK)	
	5	1	**8M-4438**	4	SEAL-O-RING	
	6	1	**8M-5254**	6	SEAL-O-RING	
	7	1	**114-3926**	1	PLATE	
	8	1	**9X-6772**	4	STRAP-CABLE	

Y-SEPARATE ILLUSTRATION

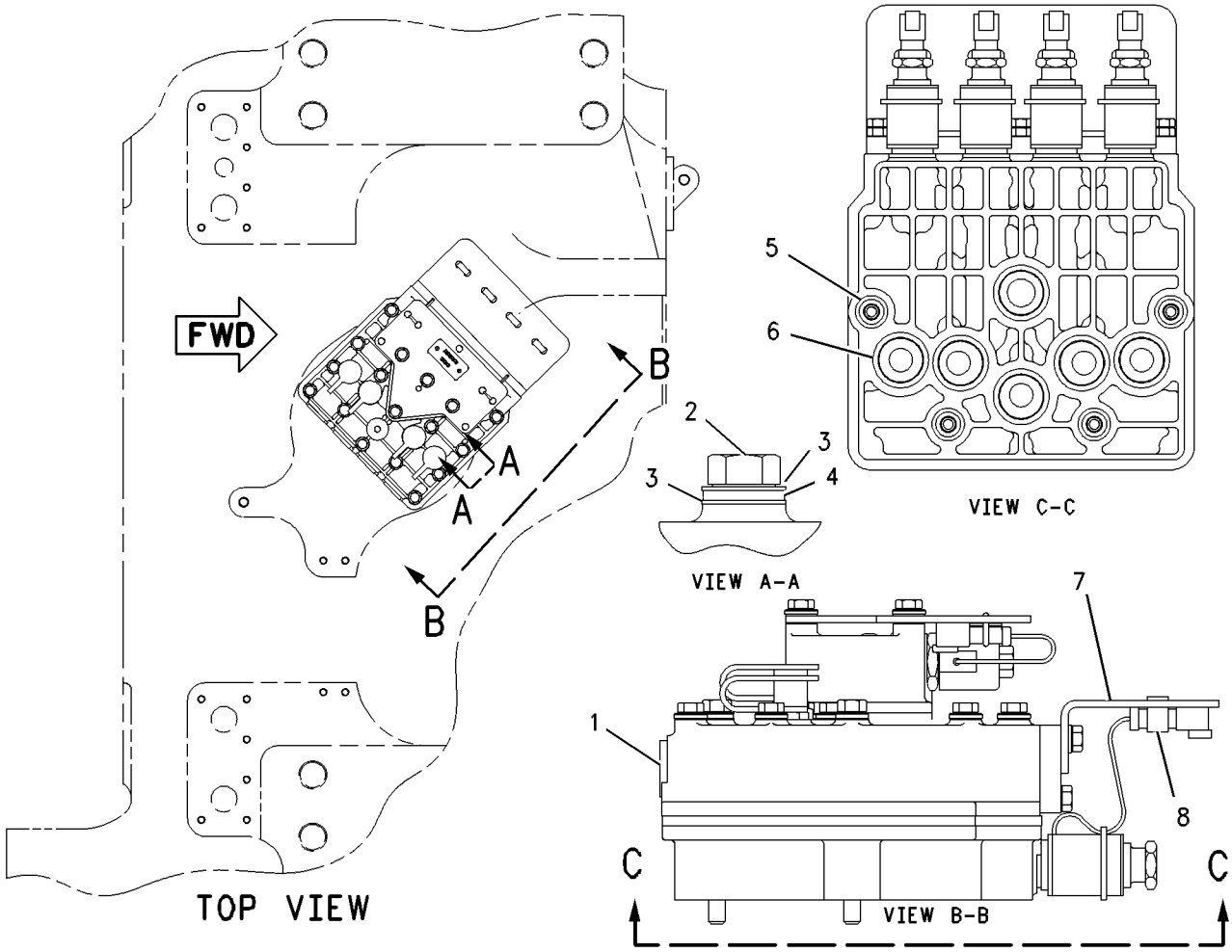

GRAPHIC #1 g00344461

POWER TRAIN

192-0729 VALVE & MTG GP-PILOT

S/N: 3KR1524-UP
PART OF 180-7467 LINES GP-OIL SUPPLY
AN ATTACHMENT

SMCS-5059 **i01431506**

NOTE	REF NO	GRAPHIC REF	PART NUMBER	QTY	PART NAME 1 2 3 4 5 6 (PRODUCT LEVEL)	SEE PAGE
	1	1	**175-3616**	1	MANIFOLD AS	
	1A	1	**6V-0852**	1	CAP-DUST	
	1B	1	**6V-3965**	1	FITTING AS (QUICK DISCONNECT)	
Y	2	1	**176-5321**	1	VALVE GP-MODULATING	660

Y-SEPARATE ILLUSTRATION

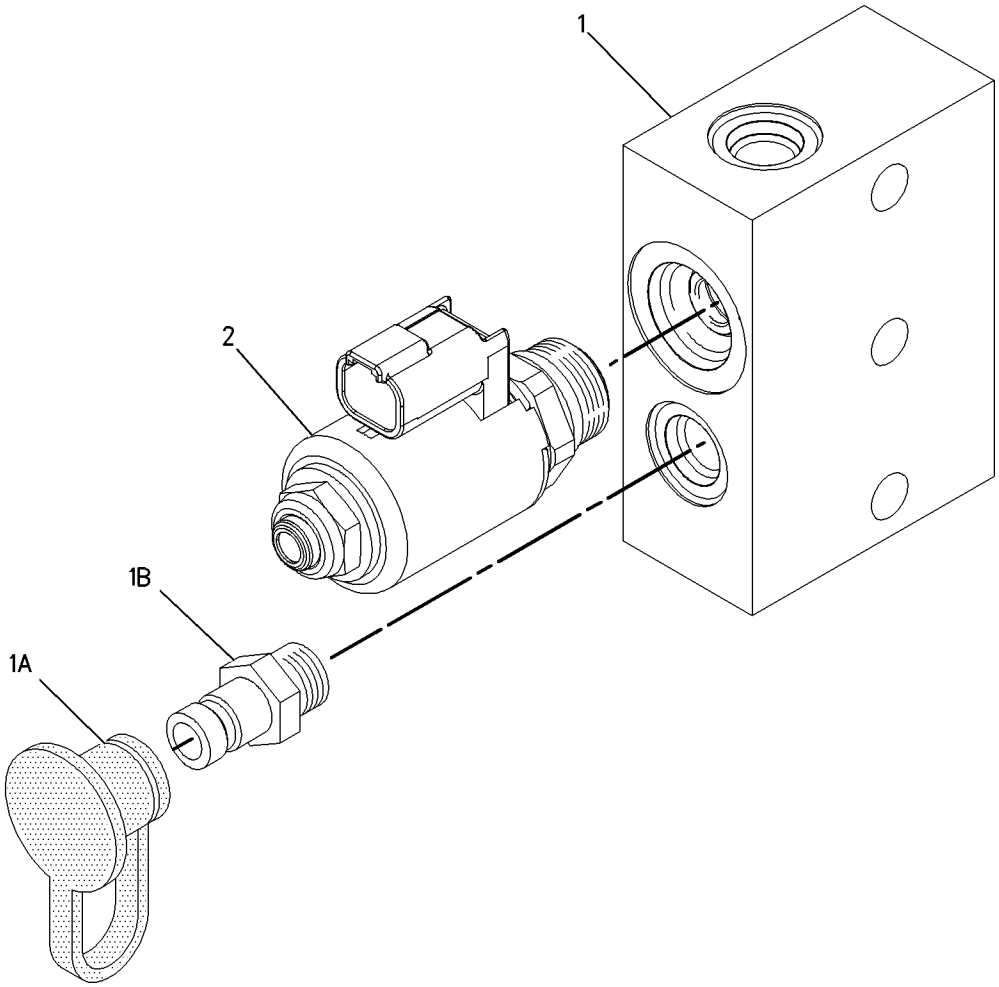

GRAPHIC #1 g00756312

POWER TRAIN

133-3255 VALVE GP-CONTROL

S/N: 3KR1-1604

PART OF 115-7414 VALVE & MTG GP-PILOT

SMCS-3167 **i01442340**

NOTE	REF NO	GRAPHIC REF	PART NUMBER	QTY	PART NAME 1 2 3 4 5 6 (PRODUCT LEVEL)	SEE PAGE
Y	1	1	*137-8795*	1	MANIFOLD & VALVE GP	627
	2	1	**108-4434**	1	PLATE-SEPARATOR	
Y	3	1	*137-8796*	1	VALVE GP-TRANSMISSION CONTROL	673
	4	1	**132-9899**	1	PLATE	
Y	5	1	*133-3246*	1	MANIFOLD & VALVE GP	626
	6	1	**132-9900**	1	PLATE	
	7	1	**185-3503**	2	SEAL-O-RING	
	8	1	**176-0259**	2	PLUG	
M	9	1	**8T-3647**	11	BOLT (M8X1.25X80MM)	
	10	1	**3S-2093**	8	STRAP-CABLE	
	11	1	**9P-9150**	36	WASHER (8.25X18X.84MM THK)	
	12	1	**185-3502**	2	SEAL-O-RING	
	13	1	**9L-9068**	4	DOWEL	
	14	1	**1T-0738**	16	WASHER (8.4X19X1.83MM THK)	
M	15	1	**8T-4177**	2	BOLT (M8X1.25X90MM)	
M	16	1	**7X-2541**	3	BOLT (M8X1.25X140MM)	
	17	1	**176-0258**	2	PLUG	
	18	1	**4J-7533**	4	SEAL-O-RING	

M-METRIC PART
Y-SEPARATE ILLUSTRATION

133-3255 VALVE GP-CONTROL *(contd.)* **i01442340**

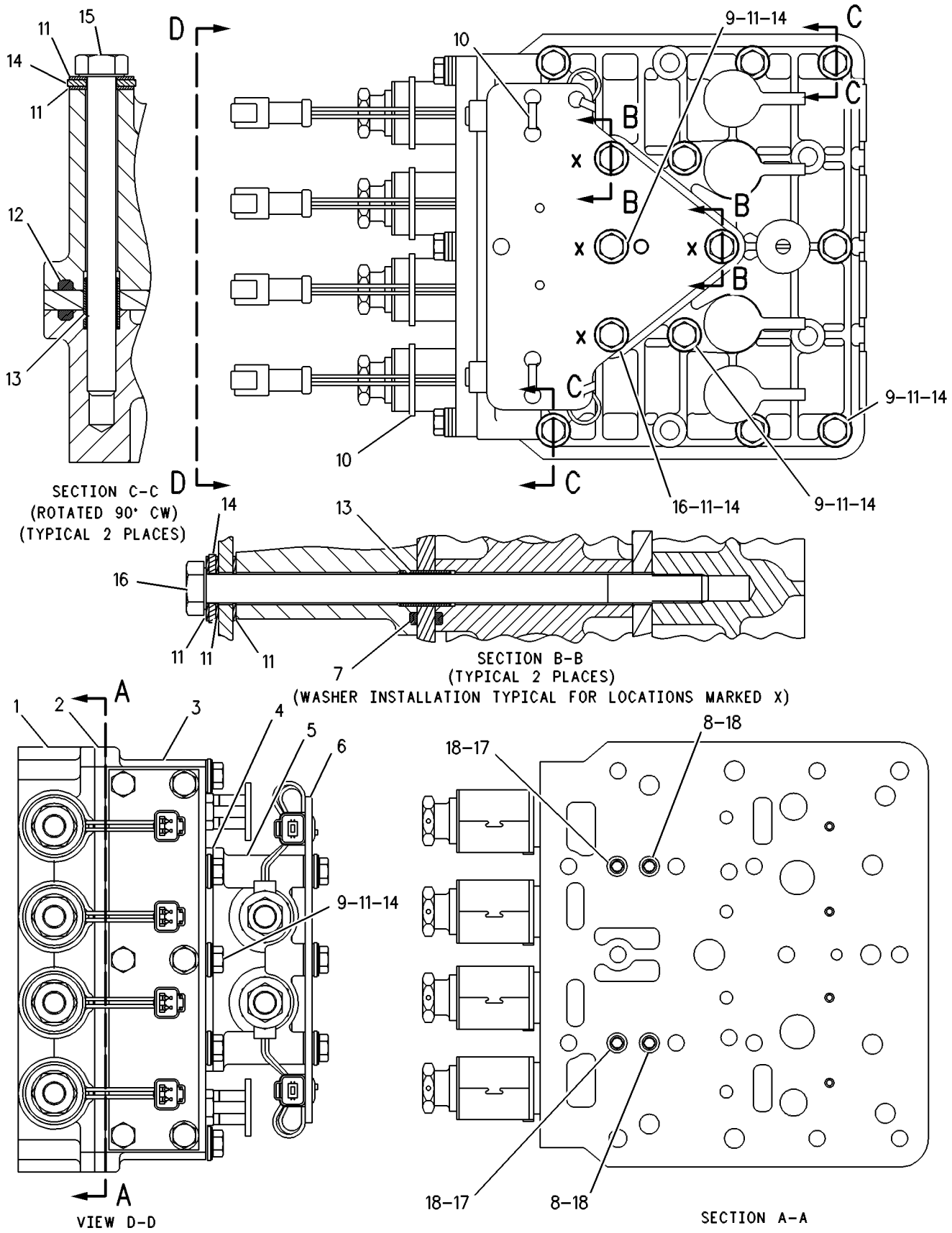

GRAPHIC #1 g00330560

POWER TRAIN

153-5442 VALVE GP-CONTROL

S/N: 1LY1345-1475

PART OF 113-8276 CONTROL GP-TRANSMISSION HYD

SMCS-3167 **i01743126**

NOTE	REF NO	GRAPHIC REF	PART NUMBER	QTY	PART NAME 1 2 3 4 5 6 (PRODUCT LEVEL)	SEE PAGE
	1	1	**6Y-0789**	1	PLUG	
	2	1	**033-6036**	1	SEAL-O-RING	
	3	1	**3P-0647**	1	SEAL-O-RING	
Y	4	1	**3E-3748**	5	VALVE GP-SOLENOID	671
Y	5	1	**6Y-0723**	1	VALVE GP-SELECTOR	670
	6	1	**9S-8007**	4	PLUG (3/8-24 THD)	
	7	1	**6Y-2762**	1	PLATE-DIVIDER	
Y	8	1	**153-5447**	1	VALVE GP-PRESSURE CONTROL	662
	9	1	**6Y-0708**	1	MANIFOLD-TOP	
	10	1	**7J-0204**	4	SEAL-O-RING	
	11	1	**124-7271**	1	SUPPORT	
	12	1	**5L-1761**	19	BOLT (5/16-18X5.5 IN)	
	13	1	**9M-1974**	24	WASHER-HARD (8.8X16X2MM THK)	
	14	1	**4F-3508**	2	BOLT (5/16-18X6.5 IN)	
	15	1	**5M-6214**	2	PLUG-PIPE	
	16	1	**9S-4191**	2	PLUG	
	17	1	**3J-1907**	2	SEAL-O-RING	
	18	1	**8M-1865**	1	BOLT (5/16-18X5.75IN)	
	19	1	**125-7011**	1	HARNESS AS	
	20	1	**124-7610**	1	ELBOW	
	21	1	**8M-4446**	1	SEAL-O-RING	
	22	1	**1T-0416**	3	BOLT (5/16-18X0.75 IN)	
	23	1	**3S-2093**	5	STRAP-CABLE	
	24	1	**118-3624**	1	CLIP AS-CONNECTING	

Y-SEPARATE ILLUSTRATION

153-5442 **VALVE GP-CONTROL** *(contd.)* **i01743126**

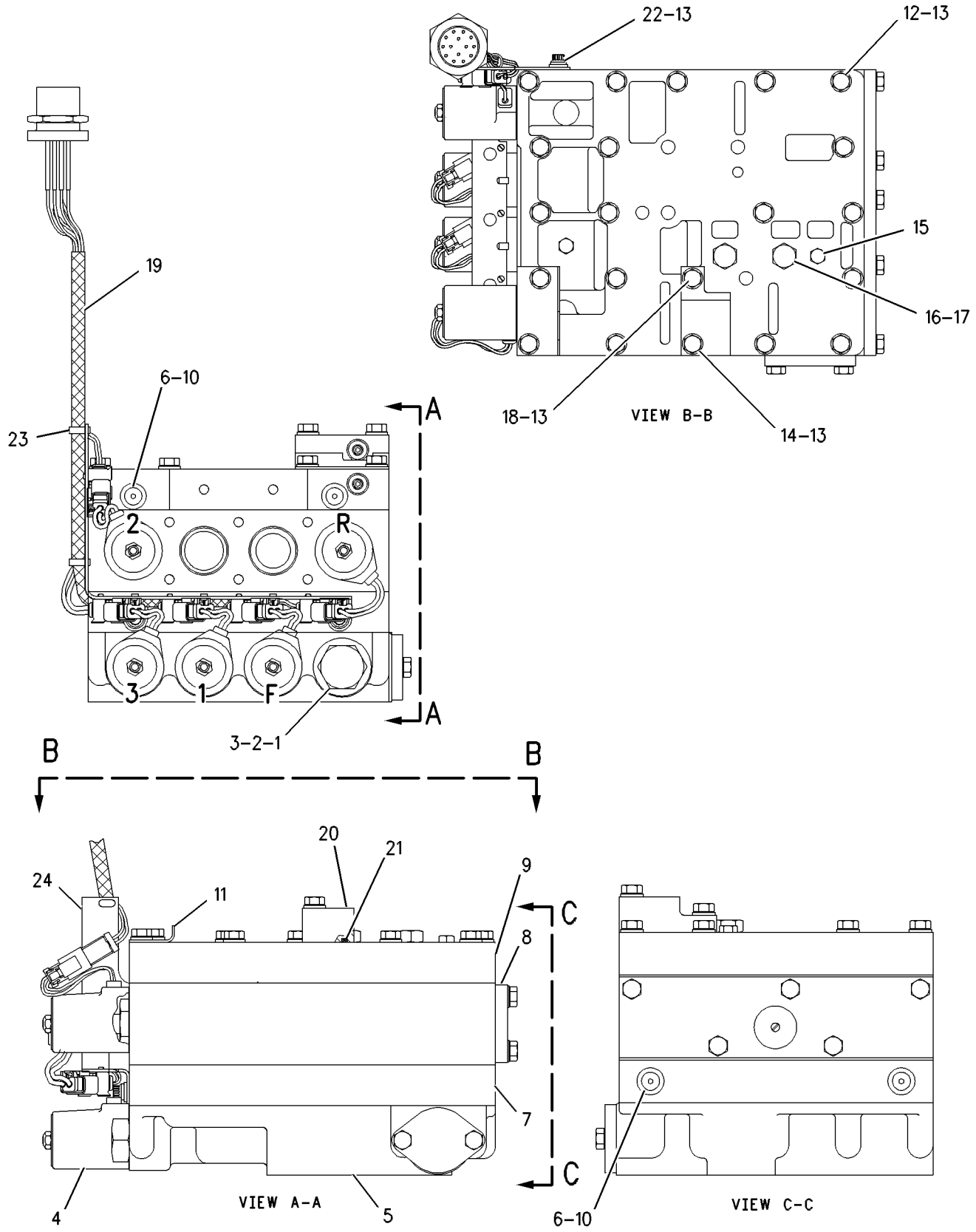

GRAPHIC #1 g00491819

POWER TRAIN

157-3923 VALVE GP-CONTROL

S/N: 1LY1476-2019

PART OF 113-8276 CONTROL GP-TRANSMISSION HYD

SMCS-3167 **i01743167**

NOTE	REF NO	GRAPHIC REF	PART NUMBER	QTY	PART NAME 1 2 3 4 5 6 (PRODUCT LEVEL)	SEE PAGE
	1	1	**6Y-0789**	1	PLUG	
	2	1	**033-6036**	1	SEAL-O-RING	
	3	1	**3P-0647**	1	SEAL-O-RING	
Y	4	1	**3E-3748**	5	VALVE GP-SOLENOID	671
Y	5	1	**6Y-0723**	1	VALVE GP-SELECTOR	670
	6	1	**9S-8007**	4	PLUG (3/8-24 THD)	
	7	1	**6Y-2762**	1	PLATE-DIVIDER	
Y	8	1	**153-5447**	1	VALVE GP-PRESSURE CONTROL	662
	9	1	**155-5462**	1	MANIFOLD-TOP	
	10	1	**7J-0204**	4	SEAL-O-RING	
	11	1	**124-7271**	1	SUPPORT	
	12	1	**5L-1761**	19	BOLT (5/16-18X5.5 IN)	
	13	1	**9M-1974**	24	WASHER-HARD (8.8X16X2MM THK)	
	14	1	**4F-3508**	1	BOLT (5/16-18X6.5 IN)	
	15	1	**5M-6214**	2	PLUG-PIPE	
	16	1	**9S-4191**	2	PLUG	
	17	1	**3J-1907**	2	SEAL-O-RING	
	18	1	**8M-1865**	1	BOLT (5/16-18X5.75IN)	
	19	1	**125-7011**	1	HARNESS AS (TRANSMISSION)	
	20	1	**124-7610**	1	ELBOW	
	21	1	**8M-4446**	1	SEAL-O-RING	
	22	1	**1T-0416**	3	BOLT (5/16-18X0.75 IN)	
	23	1	**3S-2093**	5	STRAP-CABLE	
	24	1	**118-3624**	1	CLIP AS-CONNECTING	

Y-SEPARATE ILLUSTRATION

157-3923 **VALVE GP-CONTROL** *(contd.)* **i01743167**

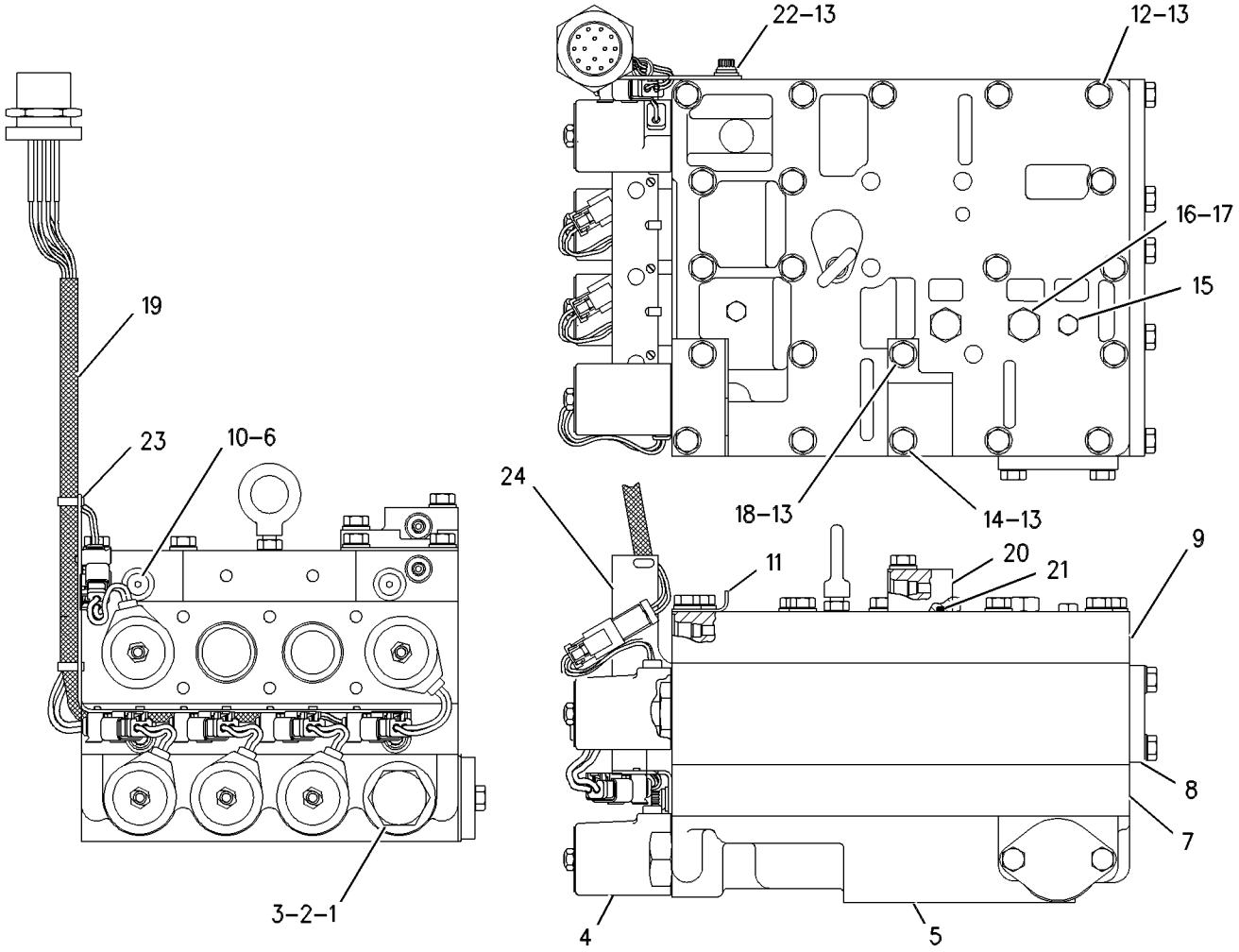

GRAPHIC #1 g00509266

POWER TRAIN

157-3923 VALVE GP-CONTROL

S/N: 1LY2020-UP

PART OF 113-8276 CONTROL GP-TRANSMISSION HYD

SMCS-3167 **i01743129**

NOTE	REF NO	GRAPHIC REF	PART NUMBER	QTY	PART NAME 1 2 3 4 5 6 (PRODUCT LEVEL)	SEE PAGE
	1	1	**6Y-0789**	1	PLUG	
	2	1	**033-6036**	1	SEAL-O-RING	
	3	1	**3P-0647**	1	SEAL-O-RING	
CY	4	1	**147-5399**	5	VALVE GP-SOLENOID	672
Y	5	1	**6Y-0723**	1	VALVE GP-SELECTOR	670
	6	1	**9S-8007**	4	PLUG (3/8-24 THD)	
	7	1	**6Y-2762**	1	PLATE-DIVIDER	
Y	8	1	**153-5447**	1	VALVE GP-PRESSURE CONTROL	662
	9	1	**155-5462**	1	MANIFOLD-TOP	
	10	1	**7J-0204**	4	SEAL-O-RING	
	11	1	**124-7271**	1	SUPPORT	
	12	1	**5L-1761**	19	BOLT (5/16-18X5.5 IN)	
	13	1	**9M-1974**	24	WASHER-HARD (8.8X16X2MM THK)	
	14	1	**4F-3508**	1	BOLT (5/16-18X6.5 IN)	
	15	1	**5M-6214**	2	PLUG-PIPE	
	16	1	**9S-4191**	2	PLUG	
	17	1	**3J-1907**	2	SEAL-O-RING	
	18	1	**8M-1865**	1	BOLT (5/16-18X5.75IN)	
	19	1	**125-7011**	1	HARNESS AS (TRANSMISSION)	
		1	**102-8802**	1	KIT-RECEPTACLE (2 PIN)	
					(INCLUDES RECEPTACLE AS & WEDGE)	
	20	1	**124-7610**	1	ELBOW	
	21	1	**8M-4446**	1	SEAL-O-RING	
	22	1	**1T-0416**	3	BOLT (5/16-18X0.75 IN)	
	23	1	**3S-2093**	5	STRAP-CABLE	
	24	1	**118-3624**	1	CLIP AS-CONNECTING	

C-CHANGE FROM PREVIOUS TYPE
Y-SEPARATE ILLUSTRATION

157-3923 **VALVE GP-CONTROL** *(contd.)* **i01743129**

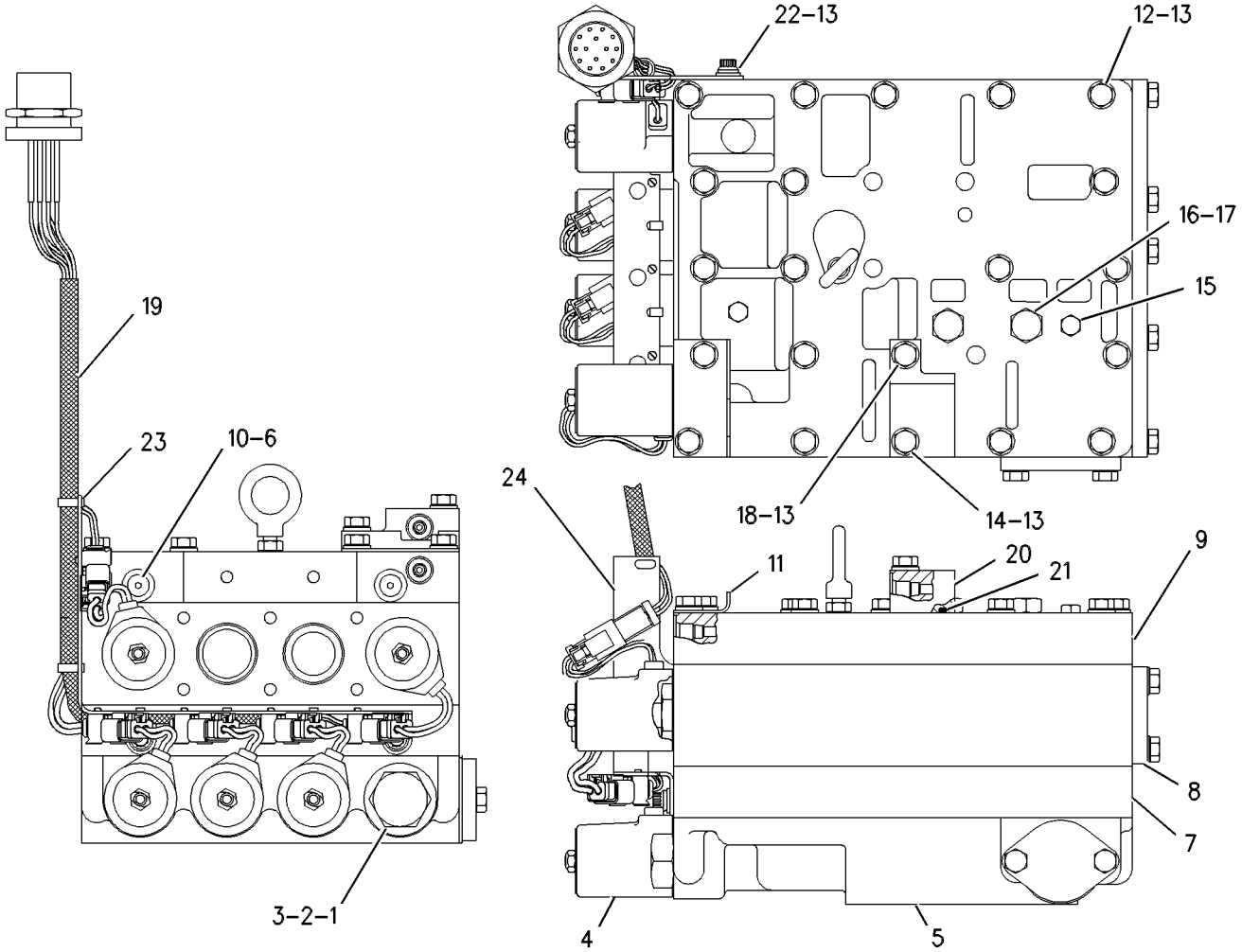

GRAPHIC #1 g00509266

POWER TRAIN

176-5321 VALVE GP-MODULATING

S/N: 3KR1524-UP
PART OF 192-0729 VALVE & MTG GP-PILOT
AN ATTACHMENT

SMCS-3139 **i01743169**

NOTE	REF NO	GRAPHIC REF	PART NUMBER	QTY	PART NAME 1 2 3 4 5 6 (PRODUCT LEVEL)	SEE PAGE
	1	1	**155-4426**	1	COIL AS	
	2	1	**164-2108**	1	WASHER (13.03X25.4X2.38MM THK)	
	3	1	**167-9524**	1	NUT-SELF LOCKING (1/2-28 THD)	
	4	1		1	VALVE AS	
					AVAILABLE REPAIR KIT(S):	
			111-3203	1	KIT-SEAL	

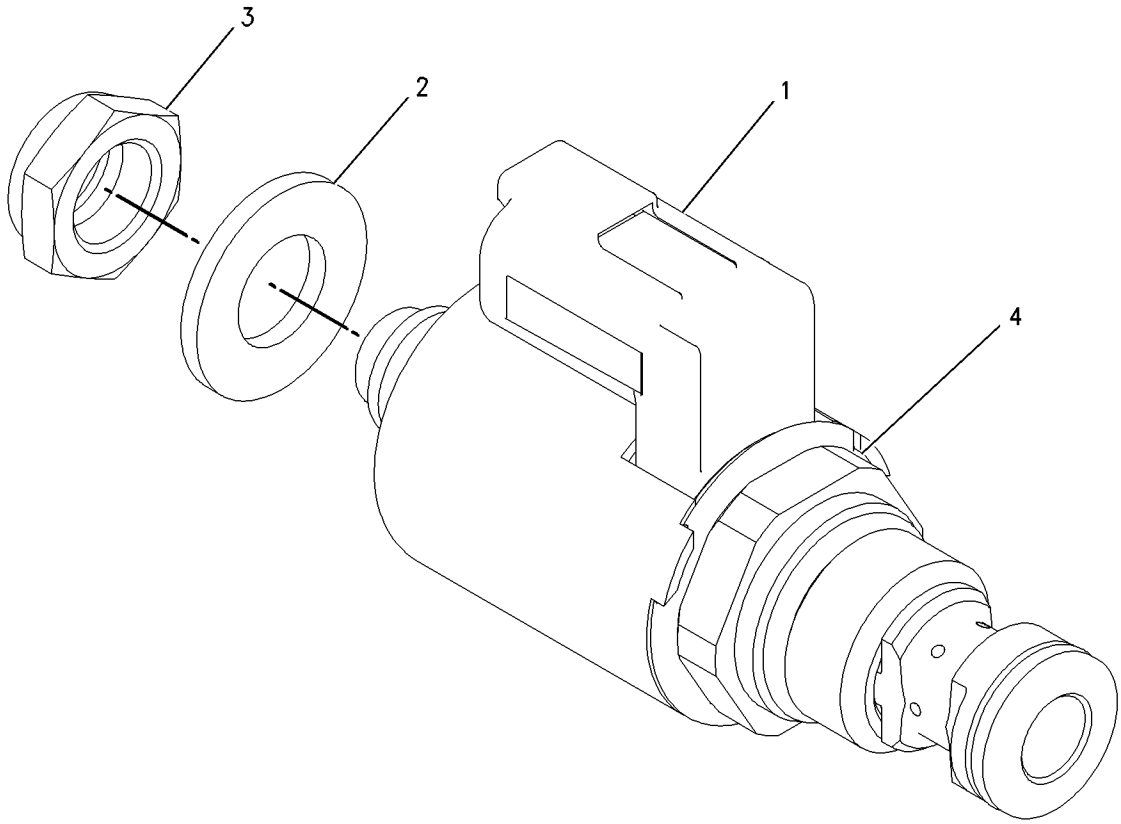

GRAPHIC #1 g00892437

MEMORANDA

POWER TRAIN

153-5447 VALVE GP-PRESSURE CONTROL

S/N: 1LY1345-UP

PART OF 153-5442, 157-3923 VALVE GP-CONTROL

SMCS-3073 **i01743172**

NOTE	REF NO	GRAPHIC REF	PART NUMBER	QTY	PART NAME 1 2 3 4 5 6 (PRODUCT LEVEL)	SEE PAGE
	1	1	**3T-3494**	1	SPOOL-RATIO	
	2	1	**116-7474**	1	STOP	
	3	1	**9W-5568**	1	SLUG	
	4	1	**6Y-0724**	1	SPOOL-SPEED SELECTOR	
	5	1	**9W-9830**	1	ORIFICE-SCREEN	
	6	1	**7G-4842**	1	SPRING	
	7	1	**9P-3041**	1	SPRING	
	8	1	**6Y-0726**	4	RETAINER	
	9	1	**6I-9519**	2	SPRING	
	10	1	**6Y-0727**	2	STOP	
	11	1	**8M-5249**	2	SEAL-O-RING	
	12	1	**5P-6261**	2	RING-RETAINING	
	13	1	**8M-5254**	2	SEAL-O-RING	
	14	1	**8E-3026**	1	PISTON-LOAD	
B	15	1	**5M-9622**	1	SHIM (1.6MM THK)	
B	16	1	**5M-9623**	1	SHIM (0.9MM THK)	
B	17	1	**5M-9624**	3	SHIM (0.25MM THK)	
	18	1	**6P-9785**	1	SPRING	
	19	1	**3P-8485**	1	RING-RETAINING	
	20	1	**6P-9786**	1	RETAINER	
	21	1	**6P-9783**	1	SPRING	
	22	1	**6P-9784**	1	SPRING	
	23	1	**6Y-0725**	1	SPOOL-SELECTOR	
	24	1	**151-3833**	1	SPOOL-VALVE	
	25	1	**2S-4872**	1	STOP	
	26	1	**3T-4215**	1	SLUG	
	27	1	**6Y-0717**	1	BODY-PRESSURE SELECTOR	
	28	1	**6Y-0728**	1	COVER	
	29	1	**8P-9296**	2	ORIFICE-PLUG	
	30	1	**2H-2995**	1	SETSCREW (10-24THD X 7/16)	
	31	1	**2B-2695**	5	BOLT (5/16-18X0.875 IN)	
	32	1	**6Y-0744**	1	STOP	
	33	1	**2S-0696**	2	DOWEL	
	34	1	**5H-8853**	1	SEAL-O-RING	
	35	1	**9W-5567**	1	SPOOL AS-RELIEF	
	36	1	**3D-8317**	1	RING-RETAINING	
	37	1	**8M-1013**	1	RETAINER	
	38	1	**4M-2381**	1	SPRING	
	39	1	**4B-9880**	1	BALL	

B-USE AS REQUIRED

153-5447 VALVE GP-PRESSURE CONTROL *(contd.)* **i01743172**

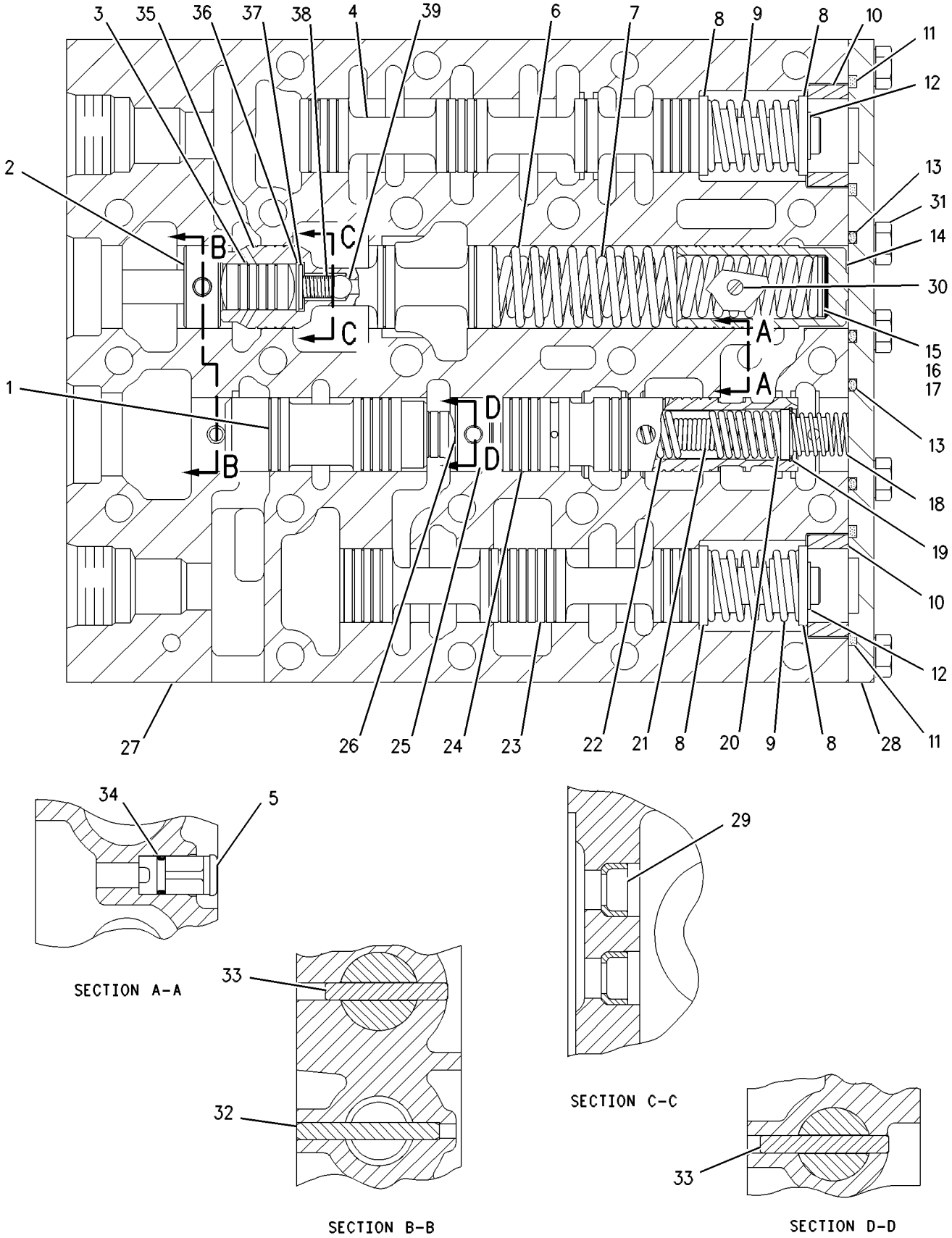

GRAPHIC #1 g00510570

POWER TRAIN

6Y-0771 VALVE GP-PRIORITY

S/N: 1LY1-UP

PART OF 113-8276 CONTROL GP-TRANSMISSION HYD

SMCS-3180, 4320 **i00603247**

NOTE	REF NO	GRAPHIC REF	PART NUMBER	QTY	PART NAME 1 2 3 4 5 6 (PRODUCT LEVEL)	SEE PAGE
	1	1	**2M-7041**	1	SLUG	
	2	1	**9S-2792**	1	COVER	
	3	1	**0L-1351**	2	BOLT (3/8-16X.875IN)	
	4	1	**6Y-0768**	1	BODY-VALVE	
	5	1	**7T-8556**	1	SPRING	
B	6	1	**5M-9624**	6	SPACER (.25MM THK)	
B	7	1	**5M-9623**	1	SPACER (.9MM THK)	
B	8	1	**5M-9622**	1	SPACER (1.6MM THK)	
	9	1	**5S-4437**	1	SPOOL AS	
	10	1	**4M-2381**	1	SPRING	
	11	1	**4B-9880**	1	BALL	
	12	1	**3D-8317**	1	RING-RETAINING	
	13	1	**8M-1013**	1	RETAINER	

B-USE AS REQUIRED

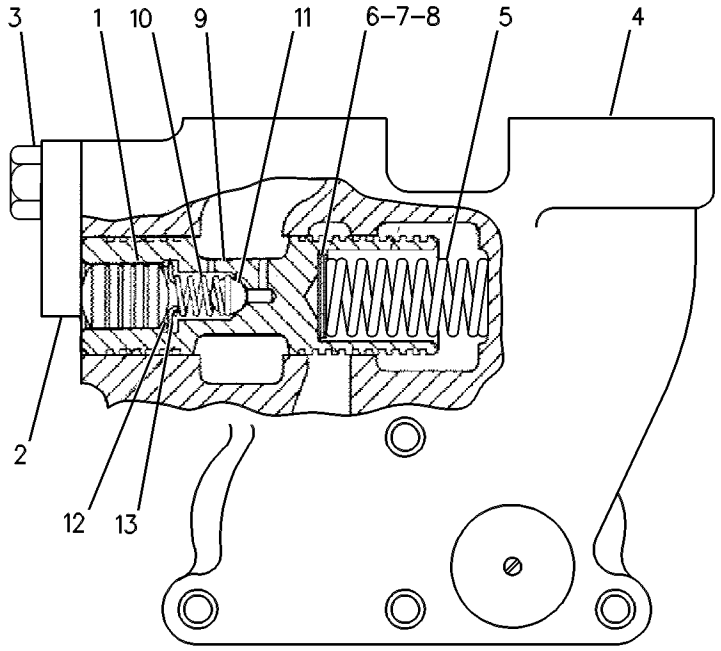

GRAPHIC #1 g00252715

MEMORANDA

POWER TRAIN

117-1034 VALVE GP-RELIEF

S/N: 3KR1-UP

PART OF 118-2486 LINES GP-POWER TRAIN OIL

SMCS-3133, 3182 **i01743173**

NOTE	REF NO	GRAPHIC REF	PART NUMBER	QTY	PART NAME 1 2 3 4 5 6 (PRODUCT LEVEL)	SEE PAGE
	1	1	**117-1032**	1	BODY-VALVE	
	2	1	**6P-3206**	1	VALVE AS-CONTROL	
	3	1	**2P-5711**	1	SPRING	
B	4	1	**5M-9622**	2	SHIM (1.6MM THK)	
B	5	1	**5M-9623**	3	SHIM (0.9MM THK)	
B	6	1	**5M-9624**	1	SHIM (0.25MM THK)	
	7	1	**4M-8239**	1	COVER	
	8	1	**8M-4986**	2	SEAL-O-RING	
	9	1	**0S-1594**	4	BOLT (3/8-16X1 IN)	
	10	1	**6V-3965**	1	FITTING AS	
	11	1	**3J-1907**	1	SEAL-O-RING	
	12	1	**6V-0852**	1	CAP-DUST	
	13	1	**8T-6762**	1	PLUG-PIPE	
	14	1	**8E-6927**	1	PLATE	
	15	1	**3P-0774**	1	GASKET	
	16	1	**2P-4538**	1	SPOOL AS-RELIEF	
	17	1	**8M-2537**	1	RETAINER	
	18	1	**9M-4313**	1	POPPET	
	19	1	**5M-9548**	1	SPRING	
	20	1	**1L-3162**	1	RING-RETAINING	

B-USE AS REQUIRED

117-1034 VALVE GP-RELIEF *(contd.)* i01743173

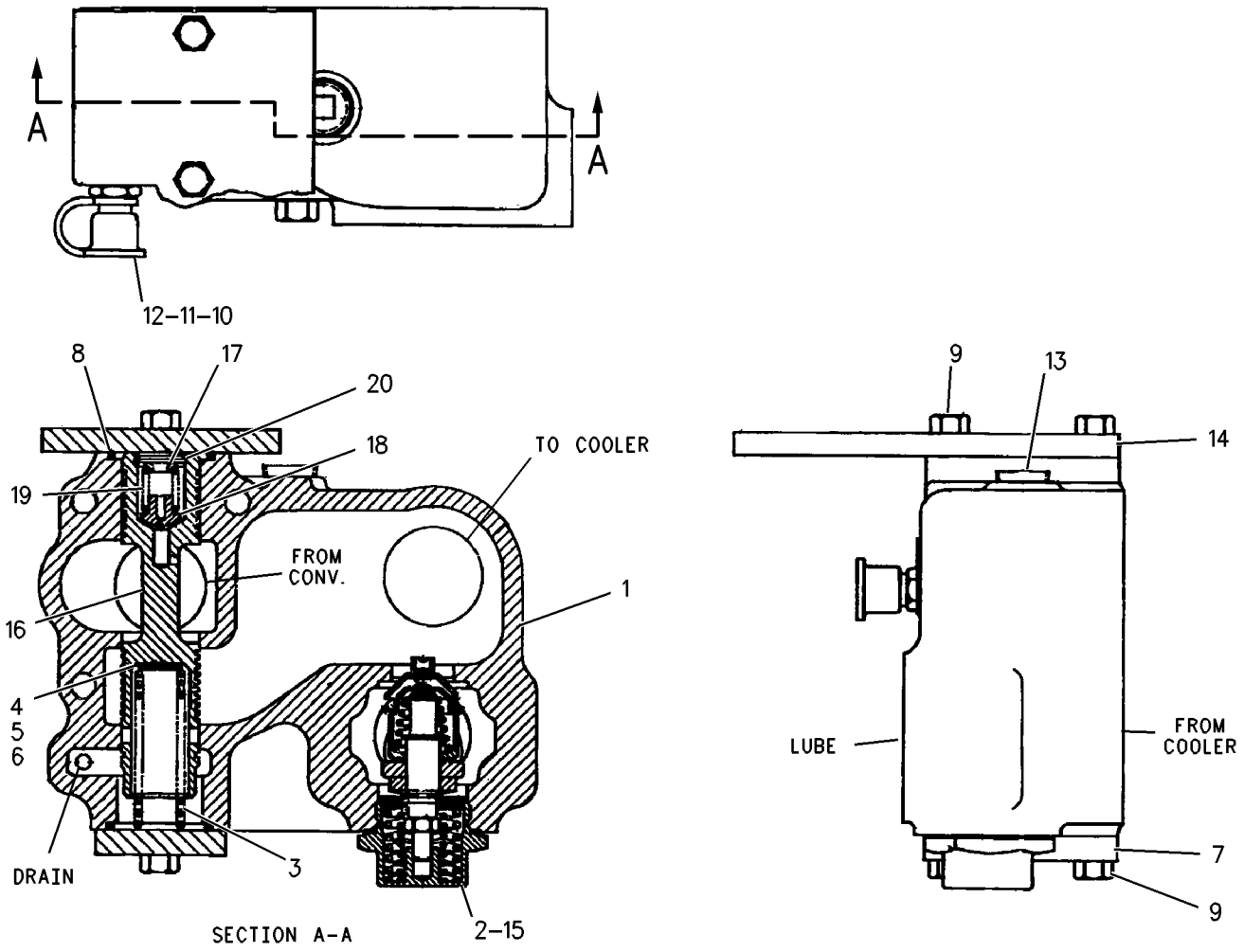

GRAPHIC #1 g00738394

POWER TRAIN

145-2888 VALVE GP-RELIEF

S/N: 3KR1178-UP

PART OF 118-2486 LINES GP-POWER TRAIN OIL

SMCS-3133, 3182 **i01743174**

NOTE	REF NO	GRAPHIC REF	PART NUMBER	QTY	PART NAME 1 2 3 4 5 6 (PRODUCT LEVEL)	SEE PAGE
	1	1	**117-1032**	1	BODY-VALVE	
	2	1	**2P-4538**	1	SPOOL AS-RELIEF	
	3	1	**9M-4313**	1	POPPET	
	4	1	**5M-9548**	1	SPRING	
	5	1	**1L-3162**	1	RING-RETAINING	
	6	1	**8M-2537**	1	RETAINER	
	7	1	**4M-8239**	1	COVER	
	8	1	**8M-4986**	2	SEAL-O-RING	
	9	1	**0S-1594**	4	BOLT (3/8-16X1 IN)	
	10	1	**6V-3965**	1	FITTING AS	
	11	1	**3J-1907**	1	SEAL-O-RING	
	12	1	**6V-0852**	1	CAP-DUST	
	13	1	**8T-6762**	1	PLUG-PIPE	
	14	1	**8E-6927**	1	PLATE	
	15	1	**3P-0774**	1	GASKET	
	16	1	**6P-3206**	1	VALVE AS-CONTROL	
	17	1	**145-7450**	1	SPRING	
B	18	1	**5M-9622**	2	SHIM (1.6MM THK)	
B	19	1	**5M-9623**	3	SHIM (0.9MM THK)	
B	20	1	**5M-9624**	1	SHIM (0.25MM THK)	

B-USE AS REQUIRED

145-2888 VALVE GP-RELIEF *(contd.)* **i01743174**

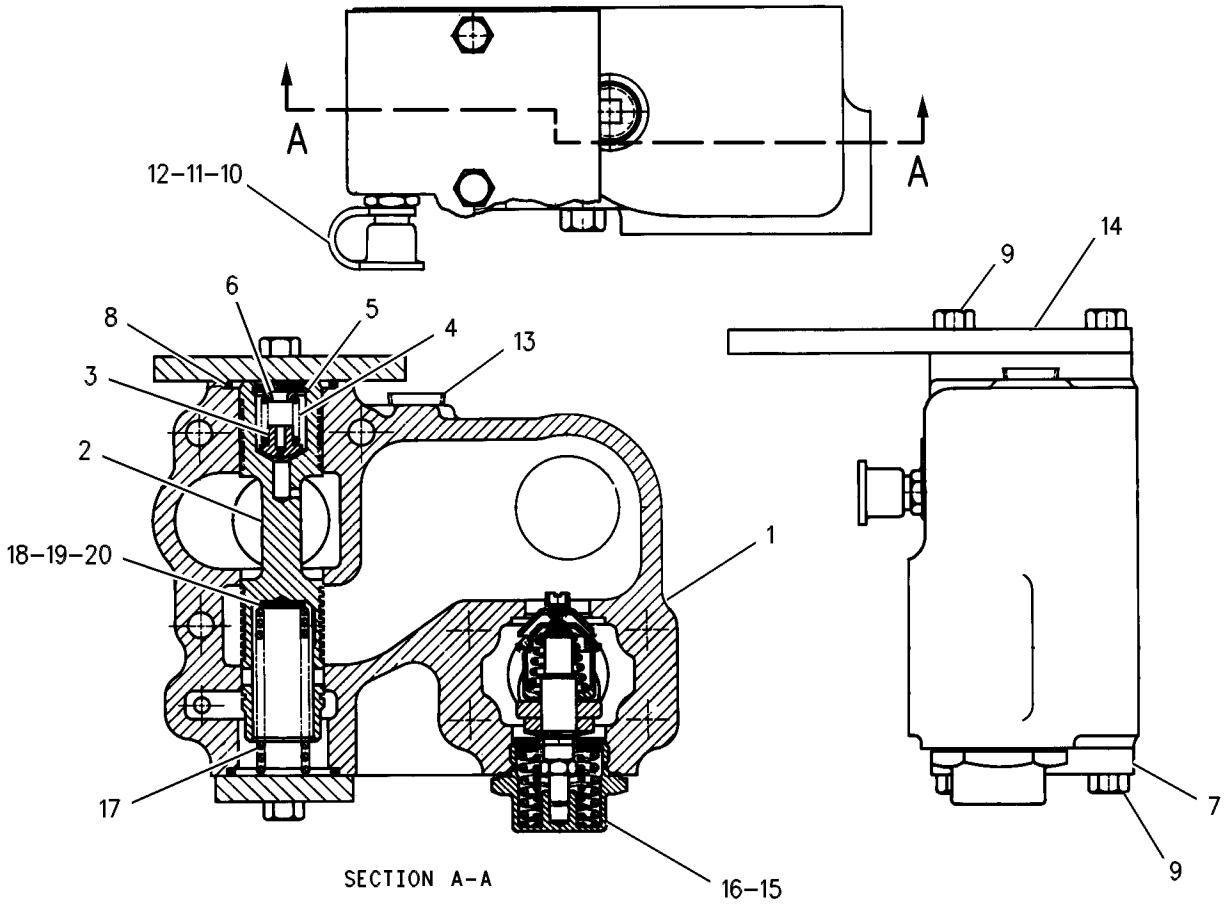

GRAPHIC #1 g00588875

POWER TRAIN

6Y-0723 VALVE GP-SELECTOR

S/N: 1LY1-UP

PART OF 113-9270 VALVE GP-BANK, 153-5442, 157-3923 VALVE GP-CONTROL

SMCS-3157, 3158, 5065 **i01743176**

NOTE	REF NO	GRAPHIC REF	PART NUMBER	QTY	PART NAME 1 2 3 4 5 6 (PRODUCT LEVEL)	SEE PAGE
	1	1	**6Y-0718**	1	MANIFOLD-BOTTOM	
	2	1	**2S-4872**	1	STOP	
	3	1	**2S-0696**	1	DOWEL	
	4	1	**6Y-0725**	1	SPOOL-SELECTOR	
	5	1	**6Y-0726**	2	RETAINER	
	6	1	**6I-9519**	1	SPRING	
	7	1	**6Y-0729**	1	STOP	
	8	1	**5P-8065**	1	SEAL-O-RING	
	9	1	**5P-6261**	1	RING-RETAINING	
	10	1	**2B-2695**	2	BOLT (5/16-18X0.875 IN)	
	11	1	**7S-6997**	1	COVER	

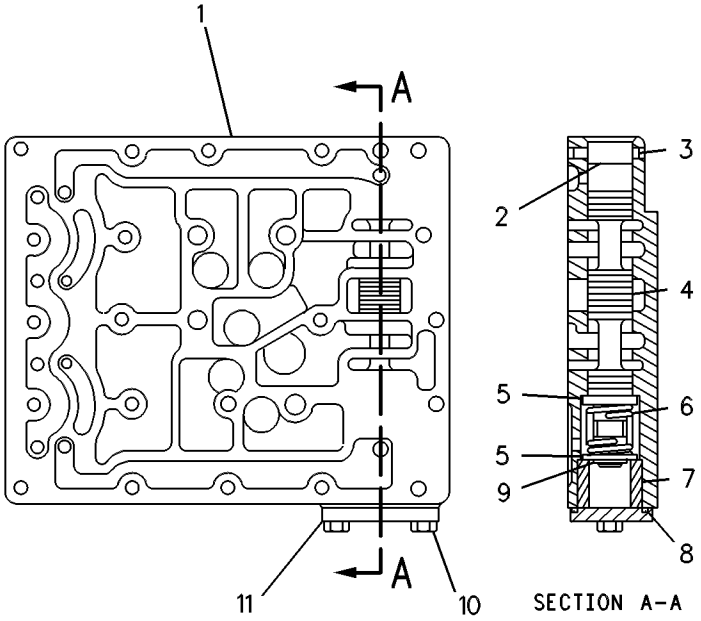

GRAPHIC #1 g00252714

POWER TRAIN

3E-3748 VALVE GP-SOLENOID

S/N: 1LY1-2019

12 VOLT DC

PART OF 113-9270 VALVE GP-BANK, 153-5442, 157-3923 VALVE GP-CONTROL

SMCS-4282, 5479 **i01692390**

NOTE	REF NO	GRAPHIC REF	PART NUMBER	QTY	PART NAME 1 2 3 4 5 6 (PRODUCT LEVEL)	SEE PAGE
	1	1	**3E-3747**	1	COIL AS	
	2	1	**1S-9593**	2	STRAP-CABLE	
	3	1	**3E-3361**	1	PLUG AS-CONNECTOR (2 PIN)	
		1	**8T-8730**	2	SOCKET-CONNECTOR	
		1	**3E-3362**	1	WEDGE-PLUG LOCK (2 PIN)	
	4	1	**104-5970**	1	LOCKNUT (1/4-20 THD)	
	5	1	**4B-4276**	1	WASHER (7X16X1.6MM THK)	
	6	1	**7X-1121**	1	CARTRIDGE AS	
					AVAILABLE REPAIR KIT(S):	
			100-4083	1	KIT-SEAL	
					(INCLUDES O-RING SEALS & BACKUP RING)	

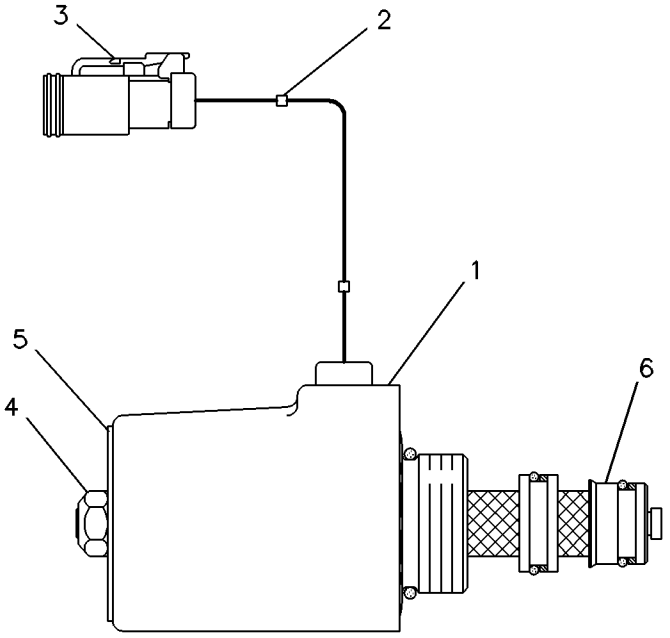

GRAPHIC #1 g00083412

POWER TRAIN

147-5399 VALVE GP-SOLENOID

S/N: 1LY2020-UP
12 VOLT DC
PART OF 157-3923 VALVE GP-CONTROL

SMCS-4282, 5479 **i01749562**

NOTE	REF NO	GRAPHIC REF	PART NUMBER	QTY	PART NAME 1 2 3 4 5 6 (PRODUCT LEVEL)	SEE PAGE
	1	1	**107-8611**	1	CARTRIDGE AS	
		1	**111-0343**	1	LOCKNUT (5/16-18 THD)	
		1	**149-5628**	1	WASHER (8.3X38.1X1.2MM THK)	
	2	1	*118-8182*	1	COIL AS	
		1	**1S-9593**	2	STRAP-CABLE	
		1	**3E-3362**	1	WEDGE-PLUG LOCK (2 PIN)	
		1	**155-2270**	1	KIT-CONNECTING PLUG (2 PIN)	
					(INCLUDES PLUG AS AND WEDGE)	
	3	1	**149-5628**	1	WASHER (8.3X38.1X1.2MM THK)	
	4	1	**111-0343**	1	LOCKNUT (5/16-18 THD)	

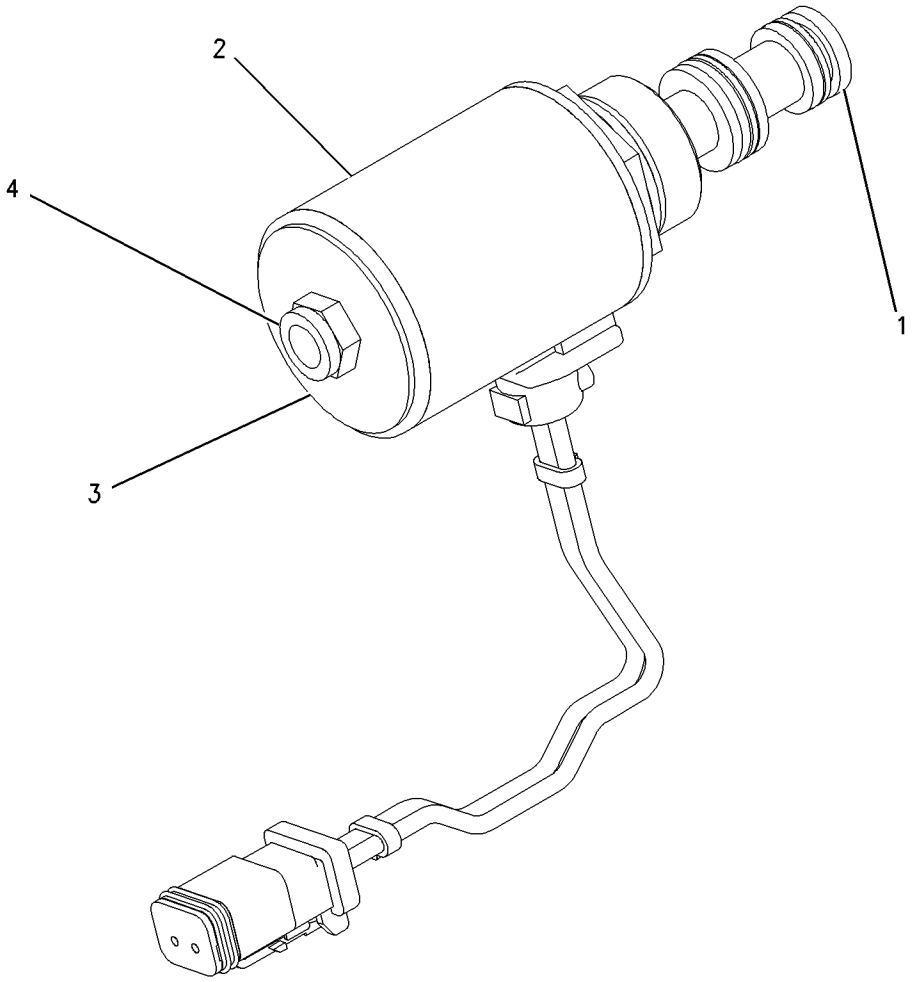

GRAPHIC #1 g00747733

POWER TRAIN

137-8796 VALVE GP-TRANSMISSION CONTROL

S/N: 3KR1-1604

PART OF 133-3255 VALVE GP-CONTROL

SMCS-3073 **i01618016**

NOTE	REF NO	GRAPHIC REF	PART NUMBER	QTY	PART NAME 1 2 3 4 5 6 (PRODUCT LEVEL)	SEE PAGE
	1	1	**8T-4224**	3	WASHER-HARD (8.8X16X2MM THK)	
	2	1	**108-4429**	4	PISTON-LOAD	
	3	1	**133-3248**	2	VALVE-CHECK	
	4	1	**108-4430**	4	SPRING	
	5	1	**9S-8008**	4	PLUG-O-RING	
	6	1	**3D-2824**	4	SEAL-O-RING	
	7	1	**108-4432**	4	SPRING (30.5MM OD)	
	8	1	**108-4431**	4	SPRING (18.8MM OD)	
	9	1	**108-4433**	1	PLATE-END	
	10	1	**6J-2419**	4	SEAL-O-RING	
M	11	1	**8T-7547**	3	BOLT (M8X1.25X30MM)	
	12	1	**6V-0852**	4	CAP-DUST	
	13	1	**6V-3965**	4	FITTING AS	
	14	1	**3J-1907**	4	SEAL-O-RING	
	15	1	**5P-1404**	2	ADAPTER-O-RING (STRAIGHT THREAD)	
	16	1	**2M-9780**	2	SEAL-O-RING	
M	17	1	**7X-2537**	3	BOLT (M8X1.25X35MM)	

M-METRIC PART

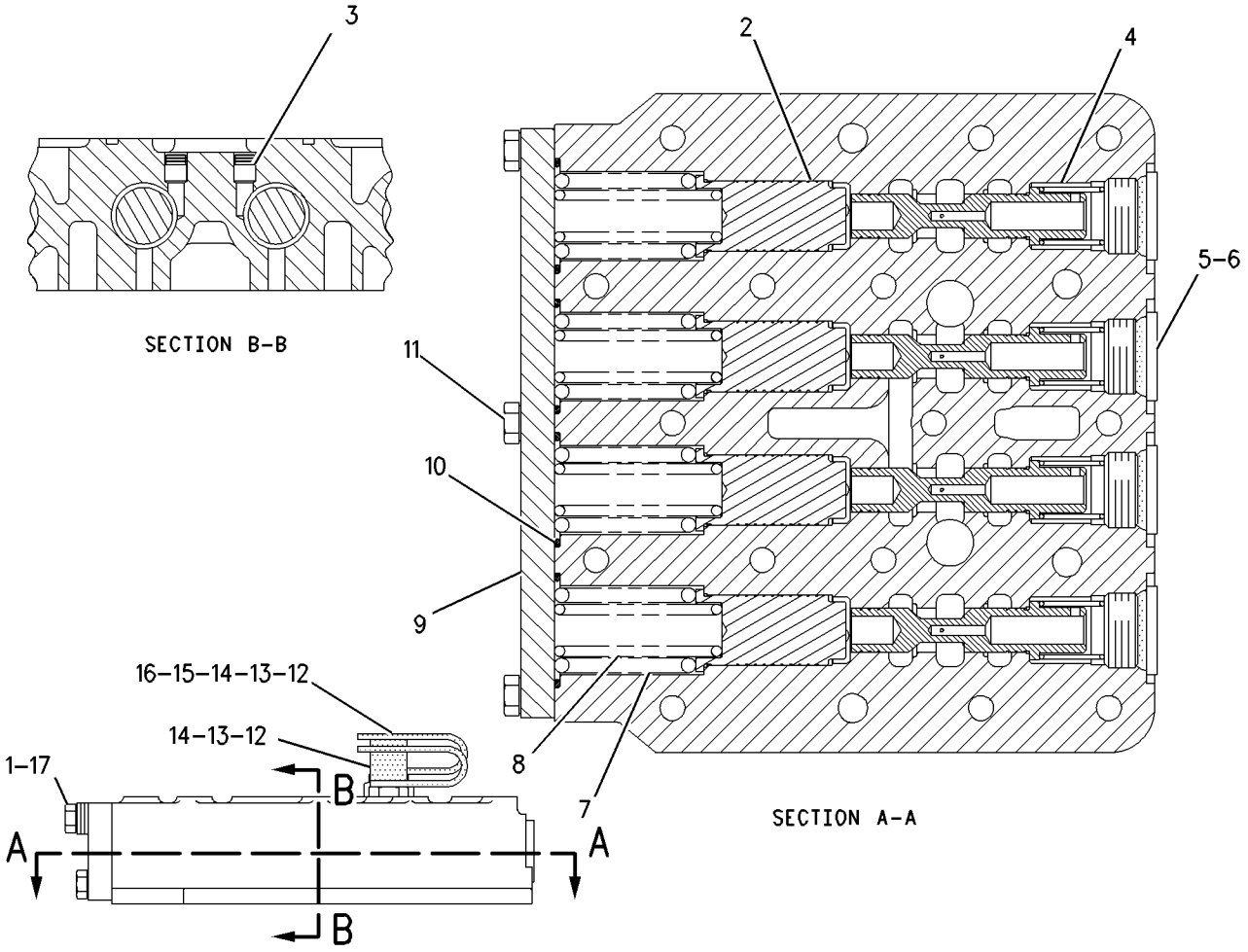

GRAPHIC #1 g00683390

201-7270 VALVE GP-TRANSMISSION CONTROL

S/N: 3KR1605-UP

PART OF 201-7272 VALVE GP-CONTROL

SMCS-3073 **i01690781**

NOTE	REF NO	GRAPHIC REF	PART NUMBER	QTY	PART NAME 1 2 3 4 5 6 (PRODUCT LEVEL)	SEE PAGE
	1	1	**188-7067**	4	SPRING	
	2	1	**188-7068**	4	RETAINER	
	3	1	**188-7069**	4	PISTON-LOAD	
	4	1	**108-4430**	4	SPRING	
	5	1	**108-4433**	1	PLATE-END	
	6	1	**9S-8008**	4	PLUG	
M	7	1	**7X-2537**	3	BOLT (M8X1.25X35MM)	
M	8	1	**8T-7547**	3	BOLT (M8X1.25X30MM)	
	9	1	**2M-9780**	2	SEAL-O-RING	
	10	1	**3D-2824**	4	SEAL-O-RING	
	11	1	**3J-1907**	2	SEAL-O-RING	
	12	1	**9S-4190**	2	PLUG	
	13	1	**6J-2419**	4	SEAL-O-RING	
	14	1	**3G-3250**	2	PLUG	
	15	1	**8T-4224**	3	WASHER-HARD (8.8X16X2MM THK)	

M-METRIC PART

201-7270 **VALVE GP-TRANSMISSION CONTROL** *(contd.)* **i01690781**

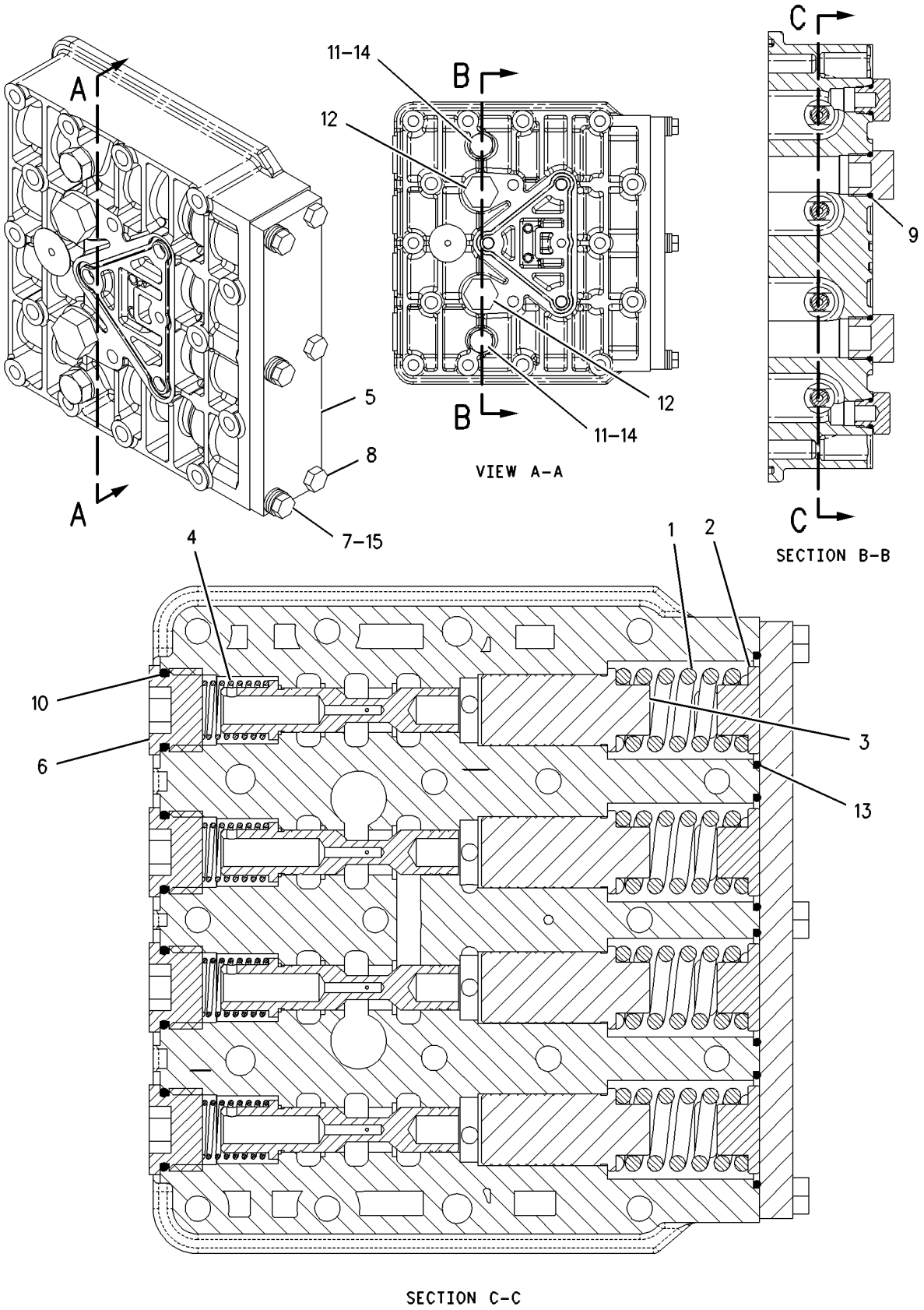

GRAPHIC #1 g00871068

MEMORANDA

PART NUMBER INDEX

Part	Page
0	
0L-0139	1075
0L-0646	998
0L-0829	1338
	1340
	1342
0L-1026	848
	850
	1075
0L-1124	1070
0L-1143	110
	113
	118
	158
	162
	166
	210
	268
	636
	991
	1075
	1076
0L-1178	822
	824
	826
	828
	830
	832
	834
0L-1351	120
	130
	159
	163
	167
	264
	550
	664
	1075
	1100
0L-1352	90
	92
	93
	156
	894
0L-2070	120
	130
	159
	163
	167
	270
	272
	274
	276
	278
	280
	282
	284
	550
	1086
0L-2315	1075
0R-8521	594
0S-0509	12
	14
	16
	18
	20
	194
	195
	200
	264
	1070
	1076
0S-1566	23
	634
0S-1569	1041
0S-1571	80
	156
	192
	210
	894
0S-1573	108
0S-1585	56
	550
	646
	848
	850
	1074
0S-1587	94
	96
	158
	162
	166
	206
	210
	1041
0S-1588	21
	22
	24
	120
	156
	158
	162
	166
	210
	264
	268
	520
	550
	894
	1070
	1075
	1076
	1086
	1088
	1100
0S-1589	944
	949
	1074
0S-1590	24
	90
	113
	156
	192
	200
	894
	986
	1074
0S-1591	24
	120
	126
	156
	158
	162
	166
	172
	174
	176
	200
	628
	894
	1086
0S-1592	1142
0S-1594	21
	22
	24
	96
	120
	126
	156
	158
	161
	162
	166
	169
	170
	171
	197
	200
	210
	264
	399
	403
	520
	550
	666
	668
	894
	994
	996
	998
	1070
	1075
	1076
	1136
0S-1595	82
	86
	120
	805
	806
	807
	810
	811
	812
	1074
0S-1597	1082
0S-1604	641
	649
0S-1608	120
	130
	156
	264
	631
	894
	991
0S-1614	212
	215
0S-1616	1305
0S-1617	192
	234
	242
	270
	272
	274
	276
	278
	280
	282
	284
	294
	296
	297
	298
	300
	302
	304
	1146
0S-1618	234
	242
	244
	1146
0S-1619	22
	90
	158
	162
	166
	399
	403
	550
0S-1620	520
0S-1625	1101
0S-1627	308
	312
0T-0055	24
	96
0T-0065	120
	156
	158
	162
	166
	197
	894
	998
0T-0167	634
0T-0573	80
	92
	93
	96
	192
0T-0768	120
	156
	894
0V-0375	994
	996
1	
1A-0168	637
1A-1135	107

► PRIMARY REFERENCE

PART NUMBER INDEX

Part	Page
	172
	174
	176
1A-1460	206
	808
	809
	813
	814
1A-2029	82
	86
	90
	130
	158
	162
	166
	200
	328
	336
	346
	368
	540
	542
	544
	550
	637
	642
	644
	992
	1074
	1075
	1115
1A-2209	1075
1A-2330	634
1A-4350	1369
	1370
1A-5183	158
	162
	166
	650
	877
1A-5822	158
	162
	166
	642
	848
	850
1A-5964	90
	286
	287
	288
	289
	290
	636
1A-9579	26
	27
	1100
1B-2578	138
	228
	230
	232
1B-2693	1404
1B-2790	26
	27
	264
1B-2886	158
	162
	167
	628
1B-3216	1144
1B-3978	558
	562
	566
	570
	574
	578
	582
	586
	590
	594
1B-3980	558
	562
	566
	570
	574
	578
	582
	586
	590
	594
1B-4367	646
1B-4430	1108
	1410
	1414
1B-5170	216
	218
1B-5355	197
1B-5675	637
1B-6182	1196
1B-7182	172
	174
	176
	192
	254
	291
	292
	1144
	1148
1B-8702	1148
1B-8704	1112
1B-8705	20
	80
	638
1B-8706	228
	230
	232
1B-8707	1026
	1027
1B-8714	852
	854
	856
1B-8736	636
1B-9575	234
	242
	244
	264
1C-0569	210
	1372
	1374
1C-2251	96
1D-4539	540
	542
	544
1D-4541	48
	50
	52
	54
	234
	242
	244
1D-4556	120
1D-4566	82
	86
	1041
	1042
1D-4569	108
1D-4585	1074
1D-4593	1041
1D-4627	106
	926
	928
	930
1D-4628	898
	900
1D-4631	106
	926
	928
	930
1D-4637	912
	914
	916
	918
	920
	922
1D-4640	559
	563
	574
	578
	582
	586
	590
	594
1D-4675	1198
1D-4677	1408
1D-4706	192
1D-4717	822
	824
	826
	1070
1D-5118	1342
1D-5875	972
	978
	982
	1103
1F-0748	220
	246
	310
	603
	609
	614
	618
	622
	680
	682
	694
	695
	698
	702
	704
	706
	708
	709
	730
	736
	746
	748
	976
	1140
	1234
	1271
	1276
	1334
	1338
	1340
	1342
	1354
	1358
1F-0750	116
	124
	126
	132
	150
	151
	178
	180
	184
	186
	188
	190
	228
	230
	232
	246
	248
	250
	262
	310
	328
	329
	336
	344
	353
	361
	369
	398
	399
	402
	403
	429
	430
	431
	432
	600
	678
	680
	682
	694
	698
	700
	702
	704

PART NUMBER INDEX

Part	Page
	708
	709
	958
	1082
	1104
	1112
	1242
	1244
	1248
	1250
	1252
	1253
	1256
	1257
	1260
	1261
	1271
	1308
	1312
	1313
	1316
	1317
	1320
	1324
	1329
	1334
	1338
	1340
	1342
	1354
	1358
1F-7567	986
1H-0974	992
	1115
1H-1023	484
	488
	494
1H-1200	1108
	1112
1H-2629	484
	488
	494
1H-3244	320
	322
	506
	508
	512
	516
1H-4106	692
1H-8128	220
	222
	224
	226
	313
	602
	608
	1076
1H-8720	1027
1H-9696	1144
1J-1971	14
1J-2192	898
	900
1J-2859	1102
1J-2890	1074
1J-5929	720
	722
1J-6474	994
	996
1J-7468	978
	982
	1103
1J-7922	1324
1J-8569	898
	900
1J-8668	964
	976
1J-9227	1075
1J-9671	220
	222
	224
	226
	1144
1K-0502	1112
1K-5760	1366
1K-6853	746
1K-6870	216
	222
1K-6872	216
	222
	734
	735
	852
	854
	856
	942
	950
	958
1K-8850	695
	737
1K-9415	686
1L-3162	666
	668
1L-4775	111
	112
1L-5072	896
1L-5081	822
	824
	826
	828
	830
	832
	834
1L-5316	1146
1L-7203	558
	562
	566
	570
	574
	578
	582
	586
	590
	594
1L-7319	558
	562
	566
	570
	574
	578
	582
	586
	590
	594
1L-8490	994
	996
1L-9080	1370
1M-1230	1274
1M-3464	602
	608
	614
	618
	622
1M-3780	638
1M-3909	638
1M-6119	329
	336
	338
	344
	345
	353
	361
	369
	476
	480
	481
1M-6120	329
	336
	338
	344
	345
	353
	361
	369
	476
	480
	481
1M-6573	598
1M-8653	822
	824
	826
	828
	830
	832
	834
1M-8657	630
1M-9968	484
	488
	495
1M-9971	485
	489
1N-3279	212
	215
1N-3300	210
1N-5999	48
	50
	52
	54
1P-0436	246
	254
	264
	291
	292
1P-1367	120
1P-1744	627
	874
1P-2176	1076
1P-2178	1076
1P-2807	1468
1P-3240	1074
1P-3262	1136
1P-3276	1074
1P-3703	972
	978
	982
	1103
1P-3705	942
	950
	956
	1000
	1002
	1006
	1010
	1012
	1103
1P-3708	126
	602
	608
	614
	618
	622
1P-4056	1075
1P-4105	1074
1P-4232	1075
1P-4233	1075
1P-4278	167
	178
	184
	186
	188
	190
1P-4576	602
	608
	614
	618
	622
	972
	974
	978
	982
	1058
	1059
	1103
1P-4577	912
	914
	916
	918
	920
	922
	926
	928
	930
	934
	942
	943
	950
	956
	972
	974
	978
	982

► **PRIMARY REFERENCE**

PART NUMBER INDEX

Part	Page
	988
	1000
	1002
	1006
	1010
	1012
	1026
	1032
	1036
	1058
	1059
	1103
	1104
1P-4578	934
	942
	943
	950
	956
	1026
	1032
	1036
1P-4579	603
	609
	614
	618
	622
	988
1P-4582	216
	218
	220
	222
	224
	226
	603
	609
	614
	618
	622
	943
	950
	957
1P-4585	944
	950
	956
1P-5130	1148
1P-5273	1074
1P-5290	1075
1P-5292	1075
1P-5294	1074
1P-5419	1074
1P-5420	1074
1P-5760	978
	982
	1103
1P-5763	602
	608
	614
	618
	622
1P-6070	1075
1P-6071	1075
1P-6153	1074
1P-6155	1074
1P-6158	1074
1P-6167	1074
1P-6172	1075
1P-6173	1075
1P-6175	1075
1P-6176	1074
1P-6178	1075
1P-6179	1074
1P-6180	1075
1P-6181	1074
1P-6182	1076
1P-6188	1075
1P-6209	1076
1P-6217	1146
1P-6356	1253
	1256
	1260
	1308
	1312
	1316
	1320
1P-6754	1074
1P-7346	80
	822
	824
	826
	828
	830
	832
	834
1P-7405	700
	828
	830
	832
	834
1P-7545	1089
1P-9254	772
	774
	780
1P-9261	630
1P-9265	1070
1Q-1157	1138
	1140
1Q-1345	398
	402
1Q-1445	398
	402
1Q-1487	932
	971
1Q-1488	932
	971
1Q-1489	932
	971
1Q-1490	932
	971
1Q-1492	932
	970
1Q-1493	932
	970
1Q-1494	932
	970
1Q-1495	932
	970
1Q-1496	932
	970
1Q-1497	932
	970
1Q-1572	694
1Q-1573	694
1Q-1574	694
1Q-1576	694
1Q-1581	399
	403
1Q-1592	424
	425
	439
	440
1Q-1609	1268
	▶1363
1Q-1620	695
1Q-1626	695
1Q-1649	695
1Q-1675	695
1Q-1678	694
1Q-1681	695
1Q-1742	1252
	1256
	1260
1Q-1743	1252
	1257
	1261
1Q-1967	398
	402
1Q-2448	398
	402
1Q-2541	310
1Q-2606	1230
	1232
1Q-2607	1230
	1232
1Q-2608	1230
	1232
1Q-2645	1230
	1232
1Q-2646	1230
	1232
1Q-2647	1230
	1232
1Q-2754	398
	402
1Q-2969	398
	402
1Q-2976	1230
	1232
1Q-2977	1230
	1232
1Q-3012	398
	402
1Q-3152	1278
1Q-3265	398
	402
1Q-3309	310
1Q-3310	310
1Q-3363	310
1Q-3366	310
1Q-3367	310
1Q-3369	310
1Q-3385	932
	970
1Q-3386	932
	970
1Q-3392	224
	226
1Q-3453	763
1Q-3457	742
	▶767
1Q-3458	742
	744
	▶762
1Q-3459	▶684
1Q-3460	684
1Q-3462	762
1Q-3463	762
1Q-3465	763
1Q-3466	763
1Q-3467	762
1Q-3468	742
	744
	▶763
1Q-3527	583
1Q-3536	583
1Q-3613	152
	154
1Q-3626	724
1Q-3627	724
1Q-3677	716
	728
1Q-3739	802
	803
	804
1Q-3740	802
	803
	804
1Q-3741	802
	803
1Q-3742	802
	803
1Q-3744	▶742
1Q-3760	1216
	1221
	1225
	1228
1Q-3762	1216
	1218
	1221
	1222
	1226
1Q-3764	1216
	1218
	1221
	1222
	1226
1Q-3765	1216
	1221
	1225
	1228
1Q-3779	1338
	1340
	1342
1Q-3783	1338
	1340
	1342
1Q-3785	1338
	1340
	1342
1Q-3787	1214
1Q-3800	1216

▶ PRIMARY REFERENCE

PART NUMBER INDEX

Part	Page
	1218
	1221
	1222
	1226
1Q-3811	1338
	1340
	1342
1Q-3828	310
1Q-4630	►836
1R-0716	550
1R-0735	998
1R-0749	264
1R-0769	253
1S-0004	132
	134
	136
	138
1S-0994	126
	951
1S-1014	708
1S-1015	943
	950
	956
	1309
	1313
	1317
	1320
1S-1638	1076
1S-4295	213
	214
1S-4698	1242
	1244
	1248
1S-4915	328
	329
	330
	338
	344
	345
	346
	352
	353
	360
	361
	368
	369
	476
	477
	480
	481
1S-5347	1074
1S-7251	328
	329
	330
	337
	338
	344
	345
	346
	352
	353
	354
	360
	361
	362

Part	Page
	368
	369
	370
	476
	477
	480
	481
1S-7252	329
	330
	338
	345
	353
	361
	369
	476
	480
1S-7446	484
	488
	494
1S-8385	598
	646
1S-8687	12
	14
	16
	18
1S-9110	644
1S-9209	57
	58
	59
	62
	63
	64
	65
	66
	70
	73
	75
	76
1S-9497	1074
	1076
1S-9498	1076
1S-9593	526
	671
	672
	880
	1020
	1047
	1048
	1049
	1051
	1052
	1053
	1054
	1056
	1108
	1112
	1203
	1287
	1291
1T-0043	1075
1T-0068	764
	765
	766
	802
	803

Part	Page
	804
1T-0141	644
1T-0229	642
1T-0241	642
1T-0242	642
1T-0278	642
1T-0414	1146
1T-0416	654
	656
	658
	1018
1T-0550	82
	86
1T-0610	642
1T-0720	82
	86
1T-0738	652
	878
	1146
1T-0822	1086
1U-0367	1043
1U-1187	1131
	1132
1U-1364	972
1U-1799	1026
1U-2092	998
1U-2533	1131
	1132
1U-2816	994
	996
1U-3173	912
	914
	916
	918
	920
	922
1U-3174	902
	904
	906
	908
	910
	912
	914
	916
	918
	920
	922
1U-3243	1038
1U-3658	1064
1U-4717	1034
1U-8846	24
	48
	50
	52
	54
1V-6341	443
	1082
1V-6652	1274
1V-8442	1350
	1352
1W-0467	210
1W-0481	200
1W-1116	120
1W-3014	108
1W-3077	474

Part	Page
1W-3136	90
1W-3189	90
1W-3862	114
1W-5283	42
	43
1W-5378	130
1W-5380	200
1W-5381	192
1W-6185	210
1W-6186	200
1W-6448	860
	862
	864
1W-6694	202
	203
1W-8795	120
1W-9460	98
1Y-7927	1298
	1302
1Z-0749	2
	4
	►724
1Z-0885	►802
	►803
2	
2A-1162	90
2A-1531	628
2A-1538	106
2A-1736	1082
	1108
2A-3746	234
	242
	244
	644
2A-4429	45
	46
2A-4639	1075
2A-4996	1027
2A-5885	1026
2B-0858	646
	854
	856
	943
	950
	959
2B-0941	181
	248
	250
	262
	964
2B-0947	994
	996
2B-2694	1144
2B-2695	80
	500
	662
	670
	1044
	1144
	1146
	1148
	1372

► PRIMARY REFERENCE

PART NUMBER INDEX

Part	Page
	1374
2D-0388	1428
	1432
2D-1290	329
	337
	345
	353
	361
	369
2D-1511	994
	996
2D-2751	1264
2D-4202	998
2D-4534	220
	222
	224
	226
2D-5173	1075
2D-5658	631
2D-6235	695
	845
	1235
	1274
	1298
	1302
2D-6374	56
2D-6392	484
	488
	494
2D-6398	1100
2D-6533	646
2D-8009	602
	608
	991
2D-9457	642
2F-5326	748
	752
	754
	757
	759
	760
	761
2F-6678	485
	488
	495
2F-7306	1344
2G-0493	694
	736
	943
	948
	958
2G-1133	522
2G-6087	1364
2G-9000	218
2H-1190	234
	242
	244
	783
	784
	786
	788
	790
2H-1537	692
2H-2525	1082
2H-2995	662
	1044
2H-3046	634
2H-3429	485
	489
	494
2H-3745	746
	748
	754
2H-3755	210
	530
	898
	912
	916
	926
2H-3856	898
	900
2H-3920	1280
	1282
	1456
	1460
2H-3922	499
	522
	527
	1202
	1210
2H-3923	1202
	1210
2H-3931	548
	637
	944
	950
	956
	994
	996
2H-3932	768
	770
	772
	774
	776
	778
	780
2H-3934	944
	950
2H-5001	1148
2H-6124	998
2H-6184	602
	608
	1070
	1074
2H-6338	944
	950
	958
	1136
2H-6488	90
2H-6622	1438
	1439
	1440
	1441
	1449
	1450
2J-0564	898
	900
2J-1227	1061
	1063
	1090
	1092
	1094
	1096
	1118
	1122
	1185
	1186
	1187
	1188
	1189
	1190
2J-1740	898
	900
2J-3118	630
	964
2J-3507	689
	1103
	1131
	1132
2J-6089	1027
2J-6356	228
	230
	232
	852
	854
	856
2J-7761	896
2J-7763	994
	996
2J-8163	484
	488
	494
2J-8348	689
2K-2813	48
	50
	52
	54
2K-4821	320
	322
2K-4973	93
	184
	186
	188
	190
	194
	195
	678
	680
	682
	695
	736
	998
	1082
	1112
	1197
	1198
	1261
	1320
	1327
	1372
	1374
	1394
	1404
	1408
	1410
	1414
	1418
2K-5254	646
2K-5830	1026
2K-5957	1076
2K-6830	924
2K-7471	598
2K-7979	228
	230
	232
2K-8199	1038
	1039
2K-8467	870
	872
2K-9111	1362
	1404
2L-1224	1264
2L-2685	120
2L-3650	642
2L-6267	1108
	1112
2L-6679	484
	488
	495
2L-8075	320
	322
	1274
2L-8076	1274
2L-9038	1082
2M-0849	637
2M-1168	1144
2M-1538	602
	608
	614
	618
	622
2M-1656	96
2M-2488	24
2M-2561	1086
2M-2742	12
	14
	16
	18
2M-3530	746
	748
	754
2M-3827	1074
2M-3974	637
2M-4453	1027
2M-5173	202
	203
2M-5407	96
2M-5656	639
	640
2M-5795	310
	700
	708
	736
2M-6095	730
2M-6096	698
2M-7041	664
2M-7819	1298
	1302
2M-9780	134
	136

PART NUMBER INDEX

Part	Page
	138
	246
	247
	248
	250
	291
	406
	408
	673
	674
	848
	850
	877
	944
	949
	950
	958
	959
	1026
	1036
	1069
	1144
2N-2765	213
	214
2N-2766	204
	205
	213
	214
2N-3162	228
	230
	232
	852
	854
	856
2N-3480	1305
2N-5775	41
2N-7029	1026
2N-7174	48
	50
	52
	54
2N-7228	105
2N-8109	26
	27
	114
2P-0911	210
2P-1005	1074
2P-1014	991
2P-1053	986
2P-1286	132
2P-1976	1076
2P-1981	1075
2P-1985	1075
2P-1986	1076
2P-1990	1075
2P-1992	1074
2P-1994	1074
2P-2003	1101
2P-2508	194
2P-2772	90
2P-2817	98
2P-2934	1076
2P-2935	1076
2P-2949	1101
2P-2975	330

Part	Page
	338
	345
	354
	362
	370
2P-3203	96
2P-3204	96
2P-3206	286
	287
	288
	289
	290
2P-3555	1101
2P-3558	1101
2P-3559	1101
2P-3566	1076
2P-3617	1146
2P-3639	1146
2P-3644	1144
2P-3646	1144
2P-3650	1148
2P-3683	1146
2P-4154	944
	950
	958
2P-4337	1428
	1432
2P-4339	1280
	1282
2P-4370	1074
	1076
2P-4439	986
2P-4538	666
	668
2P-5616	320
	322
2P-5711	666
2P-5834	1086
2P-6008	1082
2P-6532	1244
	1248
2P-6969	1148
2P-6971	1148
2P-7333	1242
2P-8421	328
	336
	344
	352
	360
	368
	603
	609
	614
	618
	622
	1040
2P-9845	110
2Q-0392	398
	402
2Q-3371	152
	154
2R-2376	1280
	1282
	1354
	1358

Part	Page
2S-0613	558
	562
	566
	570
	574
	578
	582
	586
	590
	594
2S-0696	662
	670
	1044
2S-2053	116
	120
2S-2760	140
2S-3029	111
	112
2S-3230	73
2S-4078	337
	346
	354
	362
	370
	536
	554
	556
	558
	562
	566
	570
	574
	578
	582
	586
	590
	594
	942
	943
	949
	956
	958
	1026
	1032
	1036
2S-4080	992
	1115
2S-4663	1043
2S-4872	662
	670
	1044
2S-4958	986
2S-5925	822
	824
	826
	828
	830
	832
	834
2S-5926	822
	824
	826
	828
	830
	832

Part	Page
	834
2S-6150	12
	14
	16
	18
2S-6151	12
	14
	16
	18
2S-6160	12
	14
	16
	18
2S-6218	502
2S-6408	1075
2S-7010	116
2S-8439	552
2S-8939	630
2S-9006	12
	14
	16
	18
2T-2305	796
2V-0447	1063
	1094
	1096
	1187
	1189
2V-0460	12
	14
2V-1256	1063
	1120
	1122
	1187
	1189
2V-2043	132
2V-2045	512
	516
2V-4868	167
	186
2V-5019	1276
	1338
	1340
	1342
2V-9923	796
2W-0985	156
	894
2W-1733	28
	30
2W-1734	28
	30
	32
2W-3815	34
	36
2W-3875	80
2W-4087	80
2W-4088	28
2W-6000	34
2W-6687	192
2W-6908	180
2W-6965	202
	203
2W-6967	202
	203
2W-7434	158

► PRIMARY REFERENCE

PART NUMBER INDEX

Part	Page
	162
	166
2W-7561	120
2W-7610	82
	86
2W-7614	82
	86
2W-7615	82
	86
2W-8225	550
2W-9978	893
	894
2Y-1349	1088
2Y-1371	1088
2Y-7359	1070
2Y-8284	1194
	1195
3	
3B-0551	180
3B-0623	42
	43
3B-0645	38
	40
	42
	43
3B-1915	80
	96
	158
	162
	166
	186
	200
	822
	824
	826
	828
	830
	832
	834
3B-2968	106
3B-4501	522
	527
	1202
	1206
	1210
3B-4505	1144
	1146
3B-4510	1101
3B-4605	310
	695
	698
3B-4607	700
	736
	1108
	1112
	1148
3B-4610	246
	702
	704
	730
3B-4617	12
	14
	16
	18
	726
3B-5317	722
3B-5324	1070
3B-5325	1070
	1089
3B-6552	166
	202
	203
3B-6677	720
3B-7255	986
	1324
3B-7741	167
3B-7742	161
3B-7764	986
3B-8485	12
	14
	16
	18
	70
	73
	76
3B-8489	582
	746
	748
	752
	754
	757
	759
	760
	761
	786
	902
	904
	906
	908
	910
	912
	914
	916
	918
	920
	922
	926
	928
	930
	1064
	1089
	1090
	1092
	1094
	1096
	1098
	1103
	1104
	1114
3C-1884	1452
	1454
3C-3257	698
3D-0472	796
3D-2824	132
	246
	248
	250
	262
	330
	336
	346
	354
	362
	370
	497
	498
	552
	554
	556
	602
	608
	615
	619
	623
	673
	674
	798
	800
	943
	944
	948
	949
	950
	956
	957
	958
	1040
	1069
	1086
3D-2871	90
3D-2891	1026
	1056
3D-2898	1089
3D-2975	1298
	1302
3D-2992	1148
3D-6209	477
3D-7943	627
	874
3D-8012	692
3D-8241	646
3D-8317	662
	664
	994
	996
	1044
3D-8748	1274
3D-8749	1274
3D-9133	558
	562
	566
	570
	574
	578
	582
	586
	590
	594
3D-9348	103
	104
	152
	154
3E-0109	1354
	1358
3E-0400	1202
	1206
	1210
	1286
	1290
	1294
3E-1906	►1238
	1244
3E-3361	671
3E-3362	444
	671
	672
	844
	1203
	1287
	1291
3E-3365	152
	154
	315
	328
	329
	336
	344
	345
	352
	353
	360
	361
	368
	369
	416
	417
	443
	444
	466
	467
	474
	480
	498
	522
	526
	844
	1051
	1052
	1053
	1056
	1202
	1203
	1206
	1211
	1253
	1256
	1260
	1264
	1266
	1286
	1287
	1290
	1291
	1294
	1308
	1312
	1316

► PRIMARY REFERENCE

PART NUMBER INDEX

Part	Page
	1320
3E-3368	48
	50
	52
	453
	454
	456
	457
	458
	459
	460
	461
	462
	464
	465
3E-3371	152
	154
	158
	162
	166
	264
	414
	450
	451
	452
	463
	468
	469
	470
	888
	890
	1110
	1428
	1432
3E-3374	508
	512
	516
	1428
	1432
3E-3377	445
	1047
	1048
	1049
	1320
	1428
	1432
3E-3380	1202
	1286
	1428
	1432
3E-3383	504
	876
	1202
	1269
	1280
	1282
	1286
	1330
	1332
	1452
	1454
	1456
	1460
3E-3386	522
3E-3535	1253
	1256
	1260
	1308
	1312
	1316
3E-3658	1246
3E-3747	671
3E-3748	654
	656
	▶671
	1018
3E-4051	1253
	1256
	1260
	1308
	1312
	1316
	1320
3E-4052	1253
	1256
	1260
	1308
	1312
	1316
	1320
3E-4053	1253
	1256
	1260
	1308
	1312
	1316
	1320
3E-4054	1253
	1256
	1308
	1312
	1316
	1320
3E-4057	1253
	1256
	1260
	1308
	1312
	1316
	1320
3E-4058	1253
	1256
	1260
	1308
	1312
	1316
	1320
3E-4335	1344
3E-4336	1344
3E-4352	210
	380
3E-4356	1305
3E-4362	1344
3E-4374	1112
3E-4876	547
3E-4880	547
3E-4898	1354
	1358
3E-5180	858
3E-5239	330
	337
	346
	354
	362
	370
	1264
	1266
3E-5464	1202
	1206
	1210
3E-6328	▶315
	522
	526
3E-6333	474
3E-6388	1452
	1454
	1456
	1460
3E-6389	▶414
	1234
3E-6392	1202
	1206
	1286
	1290
3E-6575	1344
3E-6601	1336
3E-6653	886
3E-6747	286
	287
	288
	289
	290
3E-6756	1090
	1092
	1094
	1096
	1098
	1104
3E-6758	1090
	1092
	1094
	1096
	1098
	1104
3E-6772	48
	50
	52
	54
3E-6900	389
	390
3E-6918	1334
3E-6919	1334
3E-6920	1334
3E-7294	506
	508
	512
	516
3E-7428	200
3E-7447	194
	195
3E-7700	228
	▶446
3E-7753	330
	337
	345
	354
	362
	370
3E-7768	485
	489
	494
3E-7771	484
	488
3E-7835	1216
	1218
	1221
	1222
	1226
	▶1274
3E-7837	1274
3E-7838	1274
3E-7839	1274
3E-8362	1336
3E-8575	1016
	1017
	▶1047
3E-8581	1047
	1048
	1049
3E-8680	▶502
	1110
3E-8825	522
	526
3E-8848	329
	336
	345
	353
3E-9177	▶1452
	1456
	1460
3E-9199	384
3E-9205	▶1048
	▶1049
	1058
	1059
3E-9350	329
	337
	345
	353
	361
	369
3E-9459	1466
3E-9865	477
	481
	1350
	1352
	1426
3F-0379	484
	488
	494
3F-1395	1074
3F-4479	1027
3F-6353	1271
3F-9556	504
3G-1258	1026
3G-1877	1090
	1092
	1094
	1096
	1185
3G-2192	882

▶ PRIMARY REFERENCE

PART NUMBER INDEX

Part	Page
3G-2193	882
3G-2241	883
3G-2242	883
3G-2292	80
3G-3094	1020
3G-3126	1040
3G-3250	674
3G-3475	1026
	1032
	1036
3G-3747	926
	928
	930
3G-3901	1026
3G-5596	1191
	1192
	1193
3G-5766	1027
3G-6065	1126
3G-6509	1191
3G-6859	1020
3G-7242	634
3G-7547	1040
3G-7624	912
	914
	916
	918
	920
	922
3G-7669	1020
	1034
3G-7698	680
3G-7891	1106
	1107
3G-8047	938
	940
3G-8051	1131
	1132
3G-8052	1131
	1132
	1152
	1154
	1156
	1159
	1160
	1162
	1164
	1166
	1168
	1170
	1172
3G-8053	1130
	1159
	1160
	1162
	1164
	1166
	1168
	1170
	1172
3G-8054	937
	938
	940
	964
	1104
3G-8057	937
	938
	940
	964
	1104
3G-8148	1027
3G-8149	1027
3G-8163	1027
3G-8164	1027
3G-8165	1027
3G-8415	1026
3G-8633	902
3G-8695	1020
	►1038
3G-8696	1039
3G-8698	1038
3G-8710	1026
	1032
	1036
3G-8858	1186
	1187
	1188
3G-9037	1038
	1039
3G-9105	1042
3G-9363	972
3G-9895	942
	948
	957
	►1043
3H-0107	1146
3H-0703	12
	14
	16
	18
3H-5366	695
3H-5841	1410
3H-6660	1234
3H-7654	783
	784
	788
3H-9675	768
	770
	772
	774
	776
	778
	780
3J-1907	152
	248
	250
	262
	310
	328
	336
	338
	344
	352
	360
	368
	536
	540
	542
	544
	552
	554
	556
	603
	609
	614
	618
	622
	636
	642
	646
	654
	656
	658
	666
	668
	673
	674
	796
	877
	886
	888
	890
	937
	938
	940
	942
	944
	948
	949
	950
	956
	957
	958
	959
	964
	976
	998
	1017
	1018
	1020
	1022
	1024
	1026
	1027
	1031
	1034
	1040
	1058
	1059
	1086
	1102
	1104
	1144
3J-2903	308
3J-4278	746
	748
	754
3J-4818	1410
	1414
3J-5169	730
	1188
3J-5552	1026
3J-6035	1063
	1189
	1190
3J-6484	926
	928
	930
3J-7354	186
	190
	202
	203
	603
	609
	614
	618
	622
	759
	760
	761
	796
	998
	1020
	1027
	1034
	1090
	1092
	1094
	1096
	1098
	1104
3J-7470	1026
3J-7473	1026
3J-7582	1027
3J-7719	994
	996
3J-8903	1074
3J-9196	1054
3K-0360	134
	136
	152
	246
	248
	250
	262
	329
	337
	344
	352
	360
	368
	406
	408
	558
	562
	566
	570
	574
	578
	582
	586
	590
	594
	603
	609
	614
	618
	622
	772
	774

► PRIMARY REFERENCE

PART NUMBER INDEX

Part	Page
	780
	798
	800
	937
	938
	940
	942
	949
	956
	964
	1020
	1023
	1031
	1102
	1104
	1144
	1146
3K-0526	1076
3K-0846	602
	608
	614
	618
	622
3K-1470	268
3K-2889	684
	686
	692
3K-3256	92
	93
3K-4897	1348
3K-5234	766
3K-5762	1146
3K-6060	328
	336
	344
	352
	360
	368
	477
	481
	1334
3K-6113	1027
3K-6235	1234
3K-7942	864
3K-8782	506
	508
	513
	517
3K-9770	692
	1175
	1176
	1177
	1178
	1179
	1180
	1181
	1182
3L-1425	994
	996
3L-1473	1404
3L-3380	484
	488
	494
3L-5893	183
3L-8187	502
	522
	523
	526
	527
	886
	888
	890
	1274
	1280
	1282
3N-3763	485
	489
	495
3N-3790	1468
3P-0218	1144
	1146
3P-0647	654
	656
	658
	1018
3P-0719	1074
3P-0747	636
3P-0774	666
	668
3P-1323	34
	36
3P-1849	574
	578
3P-1932	603
	609
	614
	618
	622
3P-2767	1144
3P-2792	630
3P-2793	630
	631
3P-2794	630
3P-2847	1144
3P-3103	630
3P-3202	1146
3P-3321	631
3P-3441	848
	850
3P-3604	704
3P-3676	1108
3P-3839	522
	526
3P-4117	1146
3P-4121	►1146
	1148
3P-4660	1144
3P-5168	1144
3P-5169	1144
3P-5938	1082
3P-7238	1075
3P-7447	630
	631
3P-7489	630
3P-7570	631
3P-8485	662
	1044
3P-8820	558
	562
	566
	570
	574
	578
	582
	586
	590
	594
3P-8822	558
	562
	566
	570
	574
	578
	582
	586
	590
	594
3P-8827	558
	562
	566
	570
	574
	578
	582
	586
	590
	594
3R-5387	180
3R-6716	1070
3R-8801	484
	488
	494
3S-0004	636
	638
	650
	877
	991
3S-0036	90
3S-1349	689
	692
	902
	904
	906
	908
	910
3S-1356	746
	748
	754
3S-2093	167
	264
	328
	329
	338
	344
	345
	352
	353
	360
	361
	368
	369
	476
	480
	509
	520
	652
	654
	656
	658
	878
	1018
	1051
	1202
	1206
	1210
	1264
	1266
	1280
	1282
	1286
	1290
	1294
	1424
3S-2682	1146
3S-2708	630
	631
	644
	1075
3S-3439	602
	608
	614
	618
	622
3S-3875	602
	608
	614
	618
	622
3S-4346	1075
	1148
3S-4388	1075
3S-6049	476
	480
3S-6050	338
	353
	361
	369
	476
	480
3S-6162	684
	686
	692
	1124
3S-6605	38
	40
	234
	242
	244
3S-6956	1112
3S-8652	552
	554
	556
3S-8664	180
3S-9233	1026
3S-9557	506
	508
	513
	517
	1444
3S-9643	158

► PRIMARY REFERENCE

PART NUMBER INDEX

Part	Page
	162
	166
3T-0304	1350
	1352
3T-0376	506
	508
	512
3T-0395	678
	680
	682
3T-0852	1203
	1211
	1287
	1291
	1295
3T-1121	1438
	1439
	1440
	1441
	1449
	1450
3T-2176	1075
3T-2284	750
3T-2357	522
	527
3T-2592	1108
	1112
3T-2662	506
	508
	512
	516
3T-2710	602
	608
	614
	618
	622
3T-2977	708
3T-3047	398
	402
3T-3048	398
	402
	1253
	1309
3T-3294	558
	562
	566
	570
	574
	578
	582
	586
	590
	594
3T-3384	736
3T-3418	484
	488
3T-3422	484
	488
	494
3T-3423	484
	488
	495
3T-3424	484
	488
	495
3T-3434	485
	489
	494
3T-3462	1354
3T-3494	662
	1044
3T-3634	1354
	1358
3T-3663	638
3T-3665	638
3T-3811	642
3T-3951	1354
	1358
3T-3953	1354
	1358
3T-4214	746
	748
	754
3T-4215	662
	1044
3T-4391	598
3T-4403	540
	542
	544
3T-4578	1174
3T-4580	1076
3T-4704	▶472
	488
3T-4709	484
	488
	495
3T-4710	484
	488
	495
3T-4711	488
3T-4816	964
3T-4817	964
3T-4820	964
3T-4965	1086
3T-4968	1076
3T-4969	1086
3T-4992	1069
3T-4993	▶1086
	1194
	1195
3T-5016	1086
3T-5036	▶1069
	1086
3T-5231	1082
3T-5233	1076
3T-5355	637
3T-5830	628
3T-6280	1354
	1358
3T-6281	1354
	1358
3T-6354	320
	322
3T-6457	540
	542
	544
3T-6655	1456
	1460
3T-7059	1452
	1454
3T-7086	1452
	1454
3T-7566	684
	686
3T-7567	684
	686
	692
3T-8250	1082
3T-8339	1082
3T-8340	1082
3T-8341	1082
3T-8343	1082
3T-8349	1082
3T-8459	1120
	1122
3T-8649	▶1144
	1148
3T-8650	1086
	▶1148
3T-8791	692
3T-8792	692
3T-9310	722
3T-9345	1108
	1112
3T-9352	1112
3T-9353	1112
3T-9476	698
3T-9494	484
	485
	488
	489
	495
3T-9524	484
	488
	494
3T-9525	484
	488
	495
3T-9549	337
	346
	354
	362
	370
3T-9658	678
	680
	682
3V-7689	1280
3V-9399	695
	698
3W-1547	1338
	1340
	1342
3W-1809	1118
	1120
	1122
3W-2647	720
	722
3W-3110	700
	708
3W-6541	1364
3Y-7829	678
	680
	682
4	
4B-0418	264
4B-1270	860
	862
	864
4B-1282	1082
4B-1284	1082
4B-2043	322
	497
4B-2047	1305
4B-2049	472
	485
	489
	494
4B-3609	228
	230
	232
4B-3611	228
	230
	232
4B-3823	695
4B-4158	744
	767
	768
	770
	772
	774
	776
	778
	780
	1065
	1066
	1067
	1068
	1133
	1134
	1135
	1194
	1195
	1468
4B-4161	550
4B-4274	472
	602
	608
	614
	618
	622
	798
	800
	1274
4B-4276	506
	508
	512
	516
	671
	1274
4B-4278	695
	698
	1394
	1404
	1410
4B-4280	1148
	1394
4B-4281	1394

▶ PRIMARY REFERENCE

PART NUMBER INDEX

Part	Page
	1404
4B-4463	1108
	1112
	1338
4B-4845	1074
4B-4863	497
	1110
4B-5059	1298
	1302
4B-5324	520
4B-8024	1174
4B-8641	92
	93
	550
4B-9782	1052
	1053
4B-9783	1074
	1075
4B-9784	1075
4B-9785	536
	598
4B-9880	662
	664
	1044
	1144
4D-1326	138
4D-3704	78
4D-4064	1112
4D-4508	772
	774
	780
4D-6432	1369
	1370
4D-6695	1074
4D-6716	180
	329
	338
	345
	353
	361
	369
	476
	481
4D-6763	603
	609
	614
	618
	622
4D-7388	380
	398
	402
	520
4D-7733	796
4D-7735	126
	1308
	1312
	1316
	1320
4D-8148	536
4D-8924	1112
4D-8948	474
4D-9376	246
	708
4D-9517	184
	186
	188
	190
4D-9986	1146
4E-0724	380
4F-0411	24
4F-2041	642
4F-2129	848
	850
4F-2294	506
	508
	512
	516
4F-3508	654
	656
	658
	1018
4F-4879	986
	1388
	1389
	1390
	1391
	1392
	1393
	1397
	1398
	1399
	1400
	1401
4F-7389	848
	850
4F-8503	641
4F-8965	120
4F-9101	246
	700
	702
	704
4F-9653	1102
4H-0408	1020
4H-1641	80
	700
	702
	704
4H-2558	695
	698
4H-7728	698
	736
4H-9027	308
4J-0520	912
	914
	916
	918
	920
	922
	926
	928
	934
	942
	943
	950
	956
	968
	972
	974
	976
	978
	982
	988
	1002
	1004
	1006
	1008
	1010
	1012
	1014
	1015
	1026
	1040
	1103
	1104
4J-0522	934
	942
	943
	950
	956
	964
	1026
	1031
	1032
	1036
	1041
	1042
	1058
	1059
4J-0523	603
	609
	1027
	1031
4J-0524	603
	609
	942
	943
	950
	956
	988
	1088
4J-0525	1032
	1036
	1041
	1042
4J-0526	1032
	1036
	1041
	1042
4J-0527	216
	218
	220
	222
	224
	226
	308
	943
	950
	957
4J-0528	603
	609
	615
	619
	623
4J-2379	902
	904
	906
	908
	910
4J-3044	1108
	1112
4J-3427	994
	996
4J-4262	730
4J-4955	926
	928
	930
4J-5267	602
	608
	615
	619
	623
	972
	974
	976
	978
	982
	1103
4J-5351	986
4J-5477	310
	796
	1090
	1092
	1094
	1096
	1098
	1104
4J-5573	1041
	1042
4J-5977	692
4J-6888	912
	914
	916
	918
	920
	922
4J-7083	726
4J-7376	926
	928
	930
4J-7385	1040
4J-7386	1040
4J-7533	652
	878
	1017
	1020
	1024
	1031
	1034
	1038
	1039
	1059
	1144
4J-8251	998
4J-8252	998
4J-8734	904
	906
	908
	910
4J-8820	218
	220

► PRIMARY REFERENCE

PART NUMBER INDEX

Part	Page
4J-8996	1026
4J-8997	1026
	1031
4K-0684	684
	686
	692
	764
	765
	1175
	1176
	1177
	1178
	1180
	1181
	1182
	1271
4K-2039	1144
4K-2542	1250
4K-5122	506
	508
	512
	516
4K-5175	536
	783
	784
	786
	788
	848
	850
	992
	1115
4K-8302	1252
	1256
	1260
	1308
	1312
	1316
	1320
4K-8501	695
	737
4K-8864	1100
4K-9097	152
	154
	1216
	1221
	1225
	1228
	1372
	1374
4K-9429	1345
4L-1250	517
4L-2729	485
	489
4L-6454	12
	14
	16
	18
	116
	124
	126
	132
	143
	144
	150
	151
	178
	180
	184
	186
	188
	190
	207
	208
	218
	220
	222
	224
	226
	246
	248
	250
	262
	310
	313
	318
	324
	326
	329
	336
	338
	345
	353
	361
	369
	406
	408
	410
	411
	412
	420
	422
	424
	425
	439
	440
	442
	600
	602
	608
	615
	619
	623
	694
	698
	700
	702
	704
	708
	713
	796
	886
	888
	890
	937
	938
	950
	958
	964
	974
	976
	988
	1026
	1104
	1112
	1138
	1140
	1234
	1242
	1244
	1248
	1250
	1252
	1253
	1256
	1260
	1276
	1280
	1282
	1308
	1312
	1316
	1320
	1324
	1338
	1340
	1342
4L-6459	248
	250
	262
	943
	950
	957
	972
	978
	982
	1102
4L-6499	138
4L-7124	494
	506
	508
	512
	516
4L-8337	200
4L-9337	184
	186
	188
	190
	330
	338
	346
	354
	362
	370
	706
	968
	1082
	1104
	1112
	1242
	1244
	1248
	1250
	1260
	1321
4M-0200	520
4M-1336	172
	174
	176
4M-1712	1075
4M-1815	472
	495
4M-1827	485
	489
	494
4M-1828	484
	488
	494
4M-1829	484
	488
	494
4M-1831	484
	488
	494
4M-1853	485
	489
	494
4M-1854	485
	489
	494
4M-1896	485
	489
	495
4M-2381	662
	664
	1044
4M-3915	1076
4M-5281	138
	522
	526
	1038
	1039
4M-5282	1235
4M-5317	798
	1100
4M-5912	1040
4M-6425	12
	14
	16
	18
	474
	1362
4M-6921	998
4M-7470	695
	698
4M-7651	994
	996
4M-8239	666
	668
4M-8910	646
4N-0342	20
4N-0614	34
4N-0683	38
	108
4N-0684	28
	30
	32
	82
	86
4N-0685	34
	36

PART NUMBER INDEX

Part	Page
4N-0848	82
	86
4N-0861	120
4N-0864	21
	22
	159
	163
	167
	399
	403
	410
	411
	412
4N-0865	120
4N-0913	120
4N-0914	120
4N-0922	6
	8
	10
	▶28
	▶30
4N-0932	102
4N-0933	90
	268
4N-0955	57
	58
	59
	62
	63
	64
	65
	66
	70
	73
	75
	76
4N-1114	23
4N-1151	96
4N-1156	158
	162
	166
4N-1186	1100
4N-1232	82
	86
4N-1235	82
	86
4N-1650	38
4N-1682	21
4N-1684	21
	22
4N-1946	158
	162
	166
4N-1948	172
	174
	176
4N-2198	158
	162
	166
4N-2199	158
	162
	166
4N-2380	158
	162
	166
4N-2388	6
	▶145
4N-2481	6
	8
	10
	▶113
4N-2514	78
4N-2531	318
4N-2564	192
4N-2803	45
4N-2927	1298
	1302
4N-3329	443
4N-3808	548
4N-3841	500
4N-4307	156
	894
4N-4668	26
	27
4N-5339	140
4N-5614	105
4N-5837	7
	9
	11
	▶169
	▶170
	▶171
4N-5858	36
4N-5893	42
	43
4N-5906	45
	46
4N-6658	34
	36
4N-6672	130
4N-6876	6
	8
	10
	▶23
4N-7183	82
	86
4N-8225	324
	326
4N-8411	120
4N-8452	158
	162
	166
4N-8628	192
4N-8770	120
4N-9915	1305
4P-0513	96
4P-0519	96
4P-0692	130
	210
4P-0707	118
	270
	272
	274
	276
	278
	280
	282
	284
4P-1759	▶12
4P-3864	158
	162
	166
4P-5544	▶106
4P-5546	106
4P-5969	202
	203
4P-7428	337
	338
	346
	354
	362
	370
	410
	411
	412
	437
	438
	477
	481
	1253
	1257
	1261
4P-7429	328
	336
	337
	338
	346
	352
	360
	368
	420
	422
	438
	520
4P-7581	152
	154
	328
	336
	337
	344
	352
	360
	368
	410
	422
	440
	442
	476
	481
	520
	526
	860
	862
	866
	886
	888
	890
	1104
	1203
	1206
	1211
	1253
	1256
	1260
	1287
	1291
	1295
	1308
	1312
	1316
	1321
	1350
	1352
	1428
	1432
4P-7582	329
	336
	345
4P-8134	328
	336
	337
	344
	352
	360
	368
	520
	522
	890
	1252
	1257
	1261
	1308
	1312
	1316
	1321
	1350
	1352
	1428
	1432
4P-8495	98
	99
4Q-5430	398
	402
4Q-5432	398
	402
4R-6450	180
4S-1722	1090
	1092
	1094
	1096
4S-1962	248
	250
	1202
	1211
	1286
	1291
	1295
4S-4455	132
4S-5367	12
	14
	16
	18
4S-5780	318
	324
	326
4S-8033	730
4S-8287	1344
4S-8537	630
	631
4S-9191	156

▶ PRIMARY REFERENCE

PART NUMBER INDEX

Part	Page
	894
4T-0417	▶882
	994
	996
4T-1422	1090
	1094
	1096
	1098
4T-1864	1040
4T-2069	768
	770
	772
	774
	776
	778
	780
4T-2620	1032
	1036
4T-2698	943
	956
	▶1023
	1102
4T-3797	1159
	1160
	1162
	1164
	1166
	1168
	1170
	1172
4T-3980	1152
	1154
4T-3981	978
	982
	1103
4T-4073	1031
	▶1046
4T-4143	902
	904
	906
	908
	910
	912
	914
	916
	918
	920
	922
4T-4203	1041
4T-4205	1000
	1002
	1006
	1010
	1012
	▶1041
	▶1042
4T-4207	1041
	1042
4T-5111	▶912
	▶914
	1133
	1134
	1135
4T-5112	▶916
	▶918
	1133
	1134
	1135
4T-5114	912
	914
	916
	918
	920
	922
4T-5502	1191
	1192
	1193
4T-6116	1022
4T-6117	942
	948
	958
	▶1022
4T-6907	924
4T-6920	▶1024
	1058
4T-8181	1130
	▶1132
4T-8182	1130
	▶1131
4T-8183	1065
	1067
	▶1159
	▶1160
4T-8186	1065
	1066
	1067
	1068
	▶1130
4T-8223	1133
	▶1185
4T-8288	1149
	▶1152
4T-8594	1026
4T-9365	994
	996
4T-9366	994
	996
4T-9367	994
	996
4T-9368	994
	996
4T-9369	994
	996
4T-9370	994
	996
4T-9378	994
	996
4T-9702	1131
	1132
4T-9707	1103
	1131
	1132
4T-9977	▶926
	▶928
	▶930
	1133
	1134
	1135
4V-6981	152
	154
	1234
	1307
4V-7412	246
4V-7850	1196
4V-7855	1196
4V-7857	1196
4V-7859	1196
4V-7860	1196
4V-7865	1196
4V-7872	1404
4V-7873	1404
4V-7874	1404
4V-7876	1404
4V-7881	1196
4V-7884	1404
	1408
	1410
	1414
	1418
4V-7890	1404
4V-7891	1404
4V-7904	1394
4V-7908	1394
4V-8026	1394
4V-8029	1394
4V-8031	1394
4V-8032	1394
4V-8033	1394
4V-8034	1394
4V-8035	1394
4V-8256	1196
	1197
	1198
	1394
4V-8264	1404
4V-8554	1404
4V-8556	1404
	1410
	1414
4V-8561	1404
4V-8562	1404
4V-8565	1404
4V-8566	1404
4V-8577	1404
	1408
	1418
4V-8579	1394
4V-8586	1394
4V-8605	1394
4V-8606	1404
4V-8609	1404
4V-8610	1404
4W-1890	130
4W-2109	130
4W-2110	130
4W-4588	34
	36
4W-4794	158
	162
4W-4949	197
4W-5412	163
	167
4W-5492	28
	30
	32
4W-5596	198
4W-5698	28
	30
	32
4W-5699	28
	30
	32
4W-5700	28
	30
	32
4W-5701	28
	30
	32
4W-5702	98
	99
4W-5703	98
	99
4W-5998	110
4W-6061	34
	36
4Z-6354	897
	▶908
4Z-6355	897
	▶910
5	
5B-2638	1075
	1086
5B-4274	140
5B-9318	1146
5B-9603	158
	162
	166
	1075
5C-2890	480
	1264
	1266
5C-3240	631
5C-6565	329
	338
	345
	353
	361
	369
	406
	408
	420
	422
	437
	438
	476
	481
	600
	695
	702
	704
	709
	726
	730
	736
	746
	748
	754

▶ PRIMARY REFERENCE

PART NUMBER INDEX

Part	Page
	942
	950
	957
	972
	1000
	1002
	1006
	1010
	1012
	1102
	1271
	1364
	1365
5C-7261	844
5C-8811	1456
	1460
5C-9553	796
	866
	1202
	1206
	1210
	1264
	1286
	1290
	1294
	1452
	1454
	1456
	1460
5D-0353	558
	562
	566
	570
	574
	578
	582
	586
	590
	594
	852
	854
	856
	1250
5D-0718	1138
	1140
5D-1026	1252
	1256
	1260
	1308
	1312
	1316
	1320
	1324
5D-1849	1112
5D-1911	896
5D-4822	1298
	1302
5D-6657	641
5D-6659	598
5D-7523	558
	562
	566
	570
	574
	578

Part	Page
	582
	586
	590
	594
5D-7635	424
	425
	439
	440
5D-7927	998
5F-0304	90
5F-1678	748
	752
	754
	757
	759
	760
	761
5F-3106	943
	950
	1100
5F-3488	998
5F-3999	70
	73
	76
5F-4639	730
5F-4899	140
5F-7054	558
	562
	566
	570
	574
	578
	582
	586
	998
	1148
5F-7055	1103
5F-7845	678
	680
	682
5F-8651	994
	996
5F-9144	253
	1146
5F-9757	522
	526
5G-2944	167
5G-5503	730
5H-0135	120
5H-1504	48
	50
	52
	54
	110
5H-2068	120
5H-2767	986
5H-2824	1074
5H-3182	1404
5H-4018	974
5H-4019	912
	914
	916
	918

Part	Page
	920
	922
	926
	928
	934
	943
	950
	958
	1026
5H-4020	942
	943
	950
	956
	1032
	1036
5H-4279	637
5H-4909	1075
5H-6005	1026
5H-6733	998
5H-6734	220
	222
	224
	226
	313
	768
	770
	772
	774
	776
	778
	780
5H-7110	1070
5H-7153	603
	609
	615
	619
	623
5H-8803	684
	686
5H-8853	662
	1044
5H-8936	986
5H-8985	172
	174
	176
	644
5H-9394	708
5H-9809	1144
5J-1193	898
	900
5J-1389	1026
5J-1572	902
5J-3241	1026
5J-3326	898
	900
5J-3488	926
	928
	930
5J-4664	1026
5J-5314	485
	489
	494
5J-5315	1108
	1112
5J-5365	1103

Part	Page
	1114
5J-5402	924
5J-5559	926
	928
	930
5J-5793	628
	992
	1115
5J-8325	912
	916
	926
5J-8350	898
5K-0906	474
	1216
	1218
	1221
	1222
	1226
5K-1770	313
	615
	619
	623
5K-3772	70
	74
	76
5K-3931	598
5K-3932	598
5K-5120	536
5K-6875	143
	144
5K-7143	558
	562
	566
	570
	574
	578
	582
	586
	590
	595
5K-9065	82
	86
5K-9090	132
	134
	136
	602
	608
	615
	619
	623
	942
	949
	958
5K-9107	536
	998
5K-9179	1326
5K-9235	536
5K-9238	602
	608
	614
	618
	622
	986
5K-9244	986
5K-9246	986

► PRIMARY REFERENCE

PART NUMBER INDEX

Part	Page
5K-9592	120
5K-9989	536
	986
5L-1761	654
	656
	658
	1018
5L-2683	78
5L-2952	796
5L-4019	530
5L-4398	848
	850
5L-4756	902
	904
	906
	908
	910
	1064
	1103
5L-4758	627
	874
	998
5L-7200	522
	527
5L-8957	1250
5M-0402	246
5M-0544	692
	904
	906
	908
	910
5M-1719	1324
5M-1932	57
	58
	59
	62
	63
	64
	65
	66
	75
5M-2130	1074
5M-2894	21
	22
	24
	48
	50
	52
	54
	80
	82
	86
	90
	92
	93
	96
	110
	113
	118
	120
	130
	140
	156
	158
	161
	162
	166
	186
	192
	197
	200
	204
	205
	210
	238
	239
	240
	264
	270
	272
	274
	276
	278
	280
	282
	284
	520
	536
	540
	542
	544
	550
	602
	608
	615
	619
	623
	628
	630
	637
	642
	644
	894
	986
	992
	998
	1076
	1082
	1086
	1088
	1100
	1115
5M-3034	485
	489
	494
5M-3062	116
	124
	126
	134
	136
	138
	180
	184
	186
	188
	190
	246
	262
	328
	336
	337
	344
	352
	360
	368
	398
	402
	426
	427
	428
	429
	430
	431
	432
	442
	481
	522
	526
	527
	538
	600
	694
	713
	796
	934
	974
	976
	1082
	1102
	1252
	1256
	1260
	1277
	1308
	1312
	1316
	1321
	1324
	1327
	1354
	1355
	1358
	1376
	1377
	1378
	1394
	1408
	1410
5M-3320	991
5M-3605	638
5M-4480	631
5M-5860	1070
5M-6126	630
5M-6187	630
5M-6214	163
	167
	583
	654
	656
	658
	726
	786
	1018
	1069
5M-6687	194
	195
5M-8009	70
	73
	76
5M-8500	1235
5M-9548	666
	668
5M-9622	662
	664
	666
	668
	1044
5M-9623	662
	664
	666
	668
	1044
5M-9624	662
	664
	666
	668
	1044
5M-9735	12
	14
	16
	18
5N-0093	34
	36
5N-9227	737
5N-9379	116
5P-0063	102
5P-0076	236
	237
	238
	239
	240
	1058
	1059
5P-0537	212
	215
	254
	264
	291
	292
	1350
	1352
	1452
	1454
5P-0597	116
5P-0695	328
	329
	330
	338
	344
	345
	346
	352
	353
	360
	361
	368
	369
	476
	477
	480

PART NUMBER INDEX

Part	Page
	481
5P-0738	800
5P-0747	329
	330
	337
	338
	345
	353
	354
	361
	362
	369
	370
	476
	480
5P-0761	328
	329
	330
	336
	338
	344
	345
	352
	353
	360
	361
	368
	369
	476
	477
	480
	481
5P-0763	398
	402
5P-0904	994
	996
5P-1046	310
5P-1075	116
	124
	126
	132
	150
	151
	178
	180
	184
	186
	188
	190
	194
	195
	198
	208
	228
	230
	232
	247
	248
	250
	262
	310
	313
	318
	324
	326
	329
	337
	344
	353
	361
	369
	398
	402
	420
	422
	424
	425
	426
	427
	428
	429
	430
	431
	432
	439
	440
	477
	481
	522
	527
	600
	602
	608
	615
	619
	623
	678
	680
	682
	698
	700
	702
	704
	706
	708
	713
	726
	736
	798
	800
	856
	934
	940
	958
	964
	974
	976
	978
	982
	988
	998
	1082
	1103
	1105
	1112
	1116
	1118
	1120
	1122
	1138
	1140
	1214
	1235
	1242
	1244
	1248
	1250
	1252
	1253
	1256
	1260
	1264
	1266
	1277
	1280
	1282
	1307
	1308
	1312
	1316
	1321
	1334
	1338
	1340
	1342
	1354
	1355
	1358
	1376
	1377
	1378
	1408
	1456
	1460
5P-1076	206
	247
	248
	250
	262
	602
	608
	615
	619
	623
	692
	694
	698
	706
	708
	709
	716
	726
	728
	730
	736
	815
	816
	817
	818
	820
	978
	979
	982
	1041
	1042
	1271
	1354
	1358
	1364
	1365
5P-1251	184
	186
	188
	190
5P-1255	116
5P-1262	180
5P-1268	180
5P-1275	346
5P-1327	1133
	1134
	1135
5P-1370	82
	86
5P-1404	101
	673
	877
5P-1442	310
5P-1465	167
	184
	186
	188
	190
5P-1695	248
	250
	262
5P-1981	598
5P-2226	422
5P-2228	248
	250
	262
	308
	420
	437
	438
	704
	815
	816
	817
	818
	820
	976
	1027
	1102
	1234
	1308
	1312
	1316
	1321
	1354
	1358
5P-2322	1103
	1114
5P-2346	310
	708
	709
5P-2369	116
5P-2424	942
	950
	957
	1026

► PRIMARY REFERENCE

PART NUMBER INDEX

Part	Page
	1242
	1244
	1248
5P-2566	150
	184
	186
	188
	190
	220
	222
	224
	226
	603
	609
	615
	619
	623
	646
	684
	686
	695
	716
	726
	728
	730
	736
	934
	944
	950
	957
	976
	988
	1138
	1140
	1242
	1244
	1248
	1394
5P-2618	220
	222
	224
	226
5P-2675	1350
	1352
5P-2755	200
5P-2955	426
	427
	428
	429
	430
	431
	432
5P-3092	768
	770
	772
	774
	776
	778
	780
5P-3108	1020
	1034
5P-3414	630
5P-3418	320
	322
5P-3419	320

Part	Page
	322
5P-3422	167
5P-3488	848
	850
5P-3489	848
	850
5P-3501	603
	609
	614
	618
	622
5P-3620	554
	556
5P-3931	206
5P-3948	1252
	1257
	1261
5P-4115	136
	138
	152
	695
	1202
	1206
	1210
	1216
	1218
	1221
	1222
	1226
	1277
	1286
	1290
	1294
	1350
	1352
	1456
	1460
5P-4116	474
	844
	866
	1203
	1211
	1277
	1287
	1291
	1295
5P-4143	598
5P-4295	481
	1252
	1257
	1261
5P-4479	1100
5P-4483	1070
5P-4536	167
	184
5P-4625	70
	73
	76
5P-4868	197
5P-4961	310
5P-5405	644
5P-5422	639
	640
5P-5454	1280
	1282

Part	Page
5P-5598	130
5P-5639	700
	702
	704
5P-5643	1283
5P-5673	1203
	1207
	1211
	1264
	1266
5P-5680	1436
	1437
	1438
	1439
	1440
	1441
	1447
	1448
	1449
	1450
5P-5755	1283
	1334
5P-5824	1280
	1282
5P-5855	80
	270
	272
	274
	276
	278
	280
	282
	284
5P-5901	523
	526
5P-5908	1210
	1294
5P-5924	1264
	1266
5P-5939	1211
5P-5969	1203
	1207
	1287
	1291
	1295
5P-5991	246
	248
	250
	291
5P-5992	798
	1421
	1422
	1428
5P-6003	1110
5P-6025	354
	362
	370
5P-6129	1252
	1256
	1260
	1308
	1312
	1316
	1321
5P-6254	631

Part	Page
5P-6261	662
	670
	1044
5P-6264	523
	526
5P-6298	484
	495
5P-6313	474
5P-6314	474
5P-6393	642
5P-6605	1234
5P-6652	308
	312
5P-6670	1202
	1206
	1210
	1286
	1290
	1294
5P-6871	1327
5P-6874	1326
5P-6887	354
	362
	370
5P-6944	942
	949
	957
	964
	1102
5P-6994	406
	408
	1324
5P-7086	1432
5P-7179	768
	770
	772
	774
	776
	778
	780
5P-7211	708
	1234
5P-7213	634
5P-7462	964
5P-7463	964
5P-7466	988
5P-7467	988
5P-7468	602
	608
	615
	619
	623
5P-7469	602
	608
	615
	619
	623
5P-7513	1334
5P-7538	1051
5P-7684	48
	50
	52
	54
5P-7701	96
	615

PART NUMBER INDEX

Part	Page
	619
	623
5P-7705	700
	702
	704
5P-7807	320
	322
5P-7815	268
5P-7892	1027
5P-7907	474
5P-7957	397
	1345
	1394
5P-7958	397
	1394
5P-7972	1027
5P-8065	670
5P-8068	120
5P-8077	942
	950
	956
5P-8112	968
	988
	1104
5P-8132	1043
5P-8167	328
	337
	344
	352
	360
	368
	700
	702
	704
	1338
	1340
	1342
	1410
	1414
5P-8221	836
	837
	838
5P-8244	120
5P-8245	14
	82
	86
	90
	94
	120
	270
	272
	274
	276
	278
	280
	282
	284
	520
	558
	562
	566
	570
	575
	579
	582
	586
	590
	595
	598
	628
	630
	642
	646
	805
	806
	807
	808
	809
	810
	811
	812
	813
	814
	848
	850
	942
	950
	1088
5P-8247	23
	82
	86
	107
	536
	598
	944
	950
	956
	1074
5P-8248	106
	694
	736
5P-8249	106
	898
	900
	926
	928
	930
5P-8250	559
	563
	574
	578
	582
	586
	590
	595
	639
	640
	689
	912
	914
	916
	918
	920
	922
5P-8356	38
5P-8429	82
	86
5P-8438	1264
5P-8441	1266
5P-8445	1298
	1302
5P-8476	1089
5P-8500	216
	218
	248
	250
	262
	308
	312
	477
	481
	694
	700
	702
	704
	708
	736
	896
5P-8501	702
5P-8502	216
	218
	248
	250
	262
	308
	312
	477
	481
	694
	700
	704
	708
	736
	896
5P-8522	434
	435
	436
	437
	438
	1103
5P-8823	1175
	1176
	1177
	1178
	1179
	1180
	1181
	1182
5P-8831	550
5P-8837	730
5P-8907	876
5P-8918	1438
	1439
	1440
	1441
	1449
	1450
5P-8944	558
	562
	566
	570
	574
	578
	582
	586
	590
	594
5P-8998	536
5P-9119	998
5P-9132	1269
5P-9212	330
	337
	345
5P-9262	497
5P-9297	12
	14
	16
	18
5P-9299	161
	184
	186
	188
	190
5P-9466	1468
5P-9519	536
	628
5P-9617	998
5P-9658	548
5P-9757	126
5P-9884	1468
5P-9890	120
	130
	236
	237
	238
	239
	240
5P-9899	1098
5P-9938	886
	888
	890
5P-9957	786
5P-9959	200
5R-7545	1410
5R-7755	491
	492
5S-0003	210
5S-0581	172
	174
	176
	324
5S-0969	1076
5S-1188	200
5S-1522	634
5S-3552	1075
5S-3618	1076
5S-3664	1076
5S-3676	1076
5S-4437	664
5S-5063	398
	402
5S-5729	1075
5S-6622	991
5S-7349	134
	320
	322
	523
	526
	700
	1216

► PRIMARY REFERENCE

PART NUMBER INDEX

Part	Page
	1221
	1225
	1228
	1350
	1352
	1428
	1432
5S-7379	116
	180
	184
	186
	188
	190
	246
	328
	336
	337
	344
	352
	360
	368
	399
	403
	440
	476
	600
	646
	698
	708
	736
	798
	800
	978
	982
	1032
	1036
	1102
	1242
	1244
	1248
	1307
	1334
	1338
	1340
	1342
	1394
	1456
	1460
5S-7382	248
	250
	262
	318
	324
	326
	398
	402
	602
	608
	615
	619
	623
	912
	914
	916
	918

Part	Page
	920
	922
	926
	928
	930
	934
	942
	943
	950
	957
	974
	988
	1000
	1002
	1006
	1010
	1012
	1026
	1032
	1036
	1058
	1059
	1102
	1242
	1244
	1248
5S-7383	181
	202
	203
	547
	934
	944
	950
	957
	979
	983
	1026
	1102
	1108
	1112
	1250
	1362
5T-4502	329
	338
	345
	353
	361
	369
5T-4896	684
	686
	692
5T-8645	218
5T-9314	246
5T-9884	943
	948
	957
5V-0770	1298
	1302
5V-1474	1202
	1206
	1210
	1286
	1290
	1294
	1404

Part	Page
5V-1496	708
	1382
	1384
	1394
5V-1497	1196
	1408
	1418
5V-1498	1394
5V-1499	1394
5V-1839	1404
5V-4845	1404
5V-4855	1404
6	
6A-9718	1452
	1454
	1456
	1460
	1464
6B-0533	698
	730
6B-0830	1144
	1146
6B-1124	12
	14
	16
	18
6B-1557	540
	542
	544
6B-2882	1280
	1282
6B-4540	852
6B-4594	695
	726
6B-4661	1324
6B-6684	1342
6B-6863	630
6B-7254	24
6B-8692	184
	188
6C-3680	328
	337
	344
	352
	360
	368
	398
	402
	526
6D-0047	1404
6D-1641	1324
6D-1746	246
	702
	704
	730
6D-2928	1277
6D-4244	246
	248
	250
	262
	406
	408

Part	Page
6D-4246	161
	1264
	1266
6D-4247	399
	403
	1252
	1253
	1256
	1260
	1308
	1312
	1316
	1321
6D-4636	1309
	1313
	1317
	1321
6D-5801	1329
	1355
6D-6812	1214
	1377
	1378
6E-0381	1046
6E-0382	1046
6E-1821	634
6E-1822	634
6E-1823	634
6E-1824	634
6E-1825	634
6E-2943	994
	996
6E-3113	►924
	1125
6E-3332	998
6E-3667	904
	906
	908
	910
6E-3976	924
6E-3980	924
6E-4343	1026
	1032
	1036
6E-4432	1032
	1036
6E-4492	1032
	1036
6E-4976	924
6E-6199	912
	914
	916
	918
6F-0156	631
6F-0295	603
	609
	615
	619
	623
6F-0711	678
	680
	682
6F-5559	1144
6F-7012	538
6F-7045	499
6F-8146	558

► PRIMARY REFERENCE

PART NUMBER INDEX

Part	Page
	562
	566
	570
	575
	579
	583
	587
	591
	595
6G-7803	216
	218
6G-9102	1224
6H-1717	642
6H-3956	642
	698
	730
	741
6H-3977	1074
6H-4746	134
	136
	138
6H-9361	998
6I-0975	70
	73
	76
6I-0976	70
	73
	76
6I-0977	70
	73
	76
6I-1418	376
	377
	378
6I-1684	70
	73
	76
6I-2431	178
6I-2435	178
6I-4611	38
6I-8033	▶1402
6I-8210	▶1271
6I-8211	▶1271
6I-8212	1271
6I-8361	228
	230
	232
6I-8363	228
	230
	232
6I-8639	1354
6I-8921	1350
	1352
6I-9255	630
6I-9434	1277
6I-9441	1277
6I-9519	662
	670
	1044
6I-9534	1307
6I-9535	1307
6J-0368	998
6J-0369	998
6J-0488	708
	1280
	1282
	1354
	1358
6J-1038	1031
6J-1323	678
	680
	682
6J-2419	540
	542
	544
	673
	674
6J-2561	1027
6J-2797	924
6J-2921	994
	996
6J-2925	994
	996
6J-3134	1020
	1026
	1034
6J-5985	1159
	1160
	1162
	1164
	1166
	1168
	1170
	1172
6J-5986	1103
	1159
	1160
	1162
	1164
	1166
	1168
	1170
6J-7500	1103
	1130
	1159
	1160
	1162
	1164
	1166
	1168
	1170
	1172
6J-9298	994
	996
6J-9299	994
	996
6K-0138	1104
	1126
	1128
6K-0806	1410
	1414
6K-2188	708
6K-2198	399
	402
6K-3273	1382
	1384
	1394
6K-3274	1394
6K-3630	1104
	1126
	1128
6K-4936	1280
	1282
6K-6165	156
	894
6K-6166	156
	894
6K-8079	986
6K-8178	124
6K-8498	986
6K-9632	1428
	1432
6L-1596	255
6L-1651	603
	609
	615
	619
	623
6L-2609	796
6L-4428	38
6L-4783	1148
6L-4784	637
6L-6560	644
6L-7751	1082
6L-9284	536
	628
6L-9781	143
	144
6L-9965	536
	646
6N-0008	158
	162
	166
6N-0977	80
6N-1025	80
6N-1027	80
6N-1029	140
6N-1186	12
	14
	16
	18
6N-1350	6
	8
	10
	▶78
6N-1378	7
	9
	11
	▶107
6N-1604	410
6N-1872	320
	322
6N-1944	320
	322
6N-1945	322
6N-2206	114
6N-2229	6
	8
	10
	▶56
6N-2343	140
6N-2469	96
6N-2508	24
6N-2509	24
6N-2656	132
	136
	138
6N-2946	264
6N-2985	602
	608
	614
	618
	622
6N-3279	485
	489
	494
6N-3356	194
	195
6N-3826	484
	488
	494
6N-3896	106
6N-3897	106
6N-4414	264
6N-5650	134
6N-6037	56
6N-6657	324
6N-6872	110
6N-6984	1274
6N-7145	158
	162
	166
6N-7523	463
	1456
	1460
6N-7654	56
6N-7672	474
6N-8589	506
	508
	509
	512
	516
	1252
6N-8744	1250
6N-8942	98
	99
6N-9135	38
6P-1272	992
	1115
6P-3206	666
	668
	1022
6P-3458	631
6P-3470	1089
6P-3471	1089
6P-3473	1089
6P-3767	1074
6P-3901	644
6P-3904	642
6P-4677	1070
6P-4684	1076
6P-4685	1174
6P-5317	848
	850
6P-5661	1082
6P-6641	523
	527
6P-6739	630
6P-6926	1280

▶ PRIMARY REFERENCE

PART NUMBER INDEX

Part	Page
	1282
	1354
	1358
6P-7072	1108
6P-7564	630
6P-8339	646
6P-8340	646
6P-8829	689
	720
	722
6P-8861	1082
6P-8862	1082
6P-8863	1082
6P-8901	690
6P-9163	642
6P-9367	1148
6P-9783	662
	1044
6P-9784	662
	1044
6P-9785	662
	1044
6P-9786	662
	1044
6P-9959	1144
6S-1066	328
6S-2828	1074
6S-2829	1074
6S-4039	329
	337
	344
	352
	360
	368
6S-5993	796
6S-6308	12
	14
	16
	149
6S-9720	186
	264
6T-0206	720
6T-0302	1457
	1461
6T-0303	1457
	1461
6T-0362	472
	485
6T-0363	484
	488
	495
6T-0371	484
	488
	495
6T-0372	484
	488
	495
6T-0410	684
	686
	692
6T-0609	558
	562
	566
	570
	575
	579
	582
	586
	590
	595
6T-0840	848
	850
6T-0841	848
	850
6T-0842	848
	850
6T-1119	472
6T-1120	472
	495
6T-1139	766
6T-1141	▶766
	838
	839
	840
	841
	842
6T-1382	815
	816
6T-2037	848
	850
6T-2962	957
6T-3083	736
6T-3381	1048
6T-3382	1047
6T-3583	▶686
6T-3584	686
6T-3588	684
	686
	688
6T-3589	686
6T-3590	684
	686
6T-3591	684
	686
6T-3631	886
	888
	890
	1274
6T-3632	886
	888
	890
	1274
6T-3633	886
	888
	890
	1274
6T-3643	152
	1257
	1260
6T-3764	412
6T-3990	522
	523
	526
	1280
	1282
6T-4802	942
	948
	958
6T-4883	943
	948
	958
6T-4944	1074
6T-4964	802
	803
	804
6T-4965	802
	803
	804
6T-5246	783
	786
6T-5247	805
	810
6T-5385	695
6T-5814	522
	523
	526
	527
6T-5941	720
	722
6T-6066	522
	523
	526
6T-6079	308
	312
	726
6T-6080	308
	312
6T-6329	1280
	1282
6T-6566	558
	562
	566
	570
	574
	578
	582
	586
	590
	594
6T-6686	1203
	1207
	1210
	1286
	1290
	1294
6T-6708	1203
	1206
	1210
	1294
6T-6970	886
	888
	890
6T-7058	1350
	1352
6T-7529	1257
	1261
	1317
	1320
6T-7774	250
	262
6T-8115	512
	516
6T-8402	1435
	▶1436
6T-8403	1435
	▶1437
6T-8943	1274
6T-9099	709
6T-9134	964
6T-9180	600
6T-9222	552
6T-9223	552
6T-9244	1048
	1049
6T-9255	1274
6T-9256	1274
6T-9538	558
	574
	582
	586
	▶639
6T-9559	1016
6V-0457	598
6V-0458	598
6V-0484	310
6V-0513	▶484
	491
6V-0683	964
6V-0709	744
	767
	768
	770
	772
	774
	776
	778
	780
	848
6V-0836	630
	631
6V-0852	101
	126
	536
	602
	603
	608
	609
	614
	618
	622
	651
	666
	668
	673
	877
	943
	948
	956
	1040
6V-0894	856
	860
	862
	864
6V-0928	▶488
	492
6V-0974	937
	964
	1104
6V-1050	1020
6V-1179	389

▶ PRIMARY REFERENCE

PART NUMBER INDEX

Part	Page
	390
	883
6V-1193	708
	1112
6V-1195	883
6V-1197	270
	272
	274
	276
	278
	280
	282
	284
	882
6V-1228	246
	248
	250
	406
	408
6V-1322	484
	488
	494
6V-1355	186
	190
6V-1390	167
6V-1584	1394
6V-1653	558
	562
	566
	570
	574
	578
	582
	586
	590
	594
6V-1668	1202
	1206
	1210
	1286
	1290
	1294
6V-1748	522
	526
6V-1813	167
6V-1849	1041
	1042
6V-1899	634
6V-1949	1038
	1039
6V-1950	1354
	1358
6V-1965	502
6V-1966	502
6V-1982	1026
6V-2312	1444
	1446
6V-2317	845
6V-2318	994
	996
6V-2331	1235
6V-2360	822
	824
	826
	828
	830
	832
	834
6V-2375	1234
6V-2455	443
6V-2456	1348
	1372
6V-2485	48
	52
	►453
6V-2492	184
	186
	188
	190
6V-2495	1252
	1256
	1308
	1312
	1316
6V-2686	218
	220
	474
6V-2689	876
6V-2698	783
	786
6V-2700	805
	810
6V-2712	210
6V-2722	413
6V-2866	1112
6V-2867	1112
6V-3259	1404
6V-3260	1234
6V-3298	558
	562
	566
	570
	574
	578
	582
	586
	590
	594
6V-3319	82
	86
6V-3324	503
6V-3505	1036
6V-3536	105
6V-3549	236
	237
	238
	239
	240
6V-3830	96
	120
	550
6V-3831	26
	27
	114
6V-3884	1216
	1218
	1221
	1222
	1226
	1234
	1277
	1280
	1282
	1307
	1334
	1350
	1352
6V-3960	1456
	1460
6V-3965	101
	126
	536
	602
	603
	608
	609
	614
	618
	622
	651
	666
	668
	673
	877
	943
	949
	956
	1040
6V-4253	1026
6V-4270	1234
6V-4365	540
	542
	544
6V-4432	934
	943
	950
	956
	1032
	1036
6V-4589	24
	74
	82
	86
	100
	101
	124
	130
	236
	237
	238
	239
	240
	314
	550
	881
	1051
	1052
	1053
	1056
6V-4611	477
	481
	1468
6V-5044	200
	210
6V-5048	48
6V-5049	48
	50
	52
	54
	101
	124
	126
	142
	234
	236
	237
	238
	239
	240
	242
	244
	253
	264
6V-5050	126
	247
6V-5051	330
	337
	346
	354
	362
	370
6V-5100	26
	27
6V-5101	615
	619
	623
6V-5134	268
6V-5142	260
6V-5185	126
6V-5186	126
6V-5266	48
	50
	52
	54
6V-5645	506
	508
	513
	517

► PRIMARY REFERENCE

PART NUMBER INDEX

Part	Page
6V-5656	615
	619
	623
6V-5657	898
	900
6V-5658	898
6V-5749	1264
6V-5754	944
	948
	958
6V-5782	1026
6V-5817	1424
6V-5833	1436
	1437
	1438
	1439
	1440
	1441
	1447
	1448
	1449
	1450
6V-5849	1456
	1460
6V-5850	1456
6V-5851	1456
	1460
6V-6206	1452
6V-6207	1464
6V-6208	1452
6V-6209	1452
	1454
	1456
	1460
	1464
6V-6210	1464
6V-6211	1456
	1460
6V-6212	1456
	1460
6V-6213	1452
	1454
	1456
	1460
6V-6214	1452
	1454
	1456
	1460
6V-6215	1454
6V-6218	1454
6V-6561	1456
	1460
	►1464
6V-6572	848
	850
6V-6703	392
	393
	394
6V-6716	336
	346
	354
	362
	370
	522
6V-6757	800
6V-6797	1456
	1460
6V-6798	1456
	1460
6V-6888	1452
	1454
	1456
	1460
6V-6889	1428
	1432
	1452
	1454
	1456
	1460
	1464
6V-6923	314
6V-7190	1234
6V-7357	1350
	1352
6V-7423	82
	86
6V-7607	228
	230
	232
	852
	854
	856
6V-7631	506
	508
	513
	517
6V-7636	1234
6V-7646	1305
	1382
	1384
6V-7728	1211
	1295
6V-7744	998
6V-8073	1234
6V-8118	858
6V-8183	1108
	1112
6V-8185	506
	508
	512
	513
	516
	517
	700
	1082
	1277
	1336
6V-8186	504
	506
	508
	512
	516
6V-8187	320
	322
	1082
6V-8188	57
	58
	59
	62
	63
	64
	65
	66
	70
	74
	75
	76
	152
	154
	329
	337
	338
	345
	353
	361
	369
	399
	403
	406
	408
	472
	477
	481
	484
	488
	494
	796
	942
	943
	950
	957
	972
	974
	978
	982
	988
	1026
	1103
	1138
	1242
	1244
	1248
6V-8189	426
	427
	428
	429
	430
	431
	432
	474
	1103
6V-8190	720
	722
6V-8237	924
6V-8260	111
	112
	957
6V-8281	558
	562
	566
	570
	574
	578
	582
	586
	590
	594
6V-8358	248
	250
	262
6V-8362	503
6V-8363	522
	527
6V-8365	506
	508
	509
	512
	516
6V-8369	1456
	1460
6V-8370	522
	527
6V-8373	472
	495
6V-8374	522
	523
	526
	527
	886
	888
	890
	1274
	1280
	1282
6V-8376	152
	506
	508
	509
	512
	516
	852
	854
	856
	1252
	1257
	1260
6V-8378	138
	504
	506
	508
	512
	516
6V-8397	796
	886
	888
	890
	937
	942
	944
	948
	949
	950
	956
	957
	958
	959
	964
	976
	1027
	1040

► PRIMARY REFERENCE

PART NUMBER INDEX

Part	Page
	1102
	1104
6V-8398	247
	248
	250
	262
	291
	938
	940
6V-8400	942
	949
	957
	958
6V-8547	1216
	1218
	1221
	1222
	1226
6V-8556	126
6V-8624	291
6V-8625	938
	940
6V-8626	268
6V-8627	310
6V-8628	1090
	1092
	1094
	1096
	1098
	1104
6V-8632	124
	126
	134
	136
6V-8633	126
6V-8634	264
6V-8635	132
	134
	136
	942
	949
	958
6V-8636	124
	126
	264
	886
	888
	890
	942
	944
	949
	957
	964
6V-8637	943
	949
	958
6V-8639	124
6V-8641	796
6V-8642	124
6V-8676	260
	294
	296
	297
	300
	304
6V-8713	246
	248
	250
	798
	800
6V-8714	132
	602
	608
	614
	618
	622
6V-8715	943
	949
	958
6V-8716	602
	608
6V-8722	248
	250
	262
	406
	408
	798
	800
6V-8723	937
	1104
6V-8724	264
	886
	888
	890
	937
	943
	948
	956
	964
	976
	1040
	1104
6V-8729	310
6V-8739	126
6V-8758	700
6V-8774	942
	956
	976
	1102
6V-8781	942
	948
	958
6V-8791	126
6V-8801	116
	126
	150
	151
	184
	186
	188
	190
	202
	203
	218
	220
	328
	336
	337
	344
	352
	360
	368
	420
	422
	426
	427
	428
	429
	430
	481
	520
	523
	526
	538
	602
	603
	608
	609
	615
	619
	623
	700
	716
	728
	798
	800
	828
	830
	832
	834
	886
	888
	890
	964
	976
	1103
	1108
	1112
	1242
	1244
	1248
	1257
	1261
	1276
	1308
	1312
	1316
	1321
	1324
	1428
	1432
	1456
	1460
6V-8849	772
	774
	780
6V-8927	522
	526
	1280
	1282
6V-8928	1234
6V-8938	124
6V-8942	126
6V-8943	246
	248
	250
6V-8953	1337
6V-8954	1124
6V-8957	695
6V-8969	1305
	1336
	1456
	1460
6V-8970	684
	686
	692
6V-9000	796
6V-9001	943
	949
	957
	964
6V-9002	940
6V-9003	130
	268
6V-9005	132
6V-9006	958
6V-9007	944
	948
	956
6V-9008	615
	619
	623
6V-9009	268
6V-9168	144
6V-9176	644
6V-9182	942
	949
	958
6V-9200	1027
6V-9273	216
	218
6V-9327	1214
6V-9355	958
6V-9481	768
	770
	772
	774
	776
	778
	780
6V-9632	398
	402
	844
	860
	862
	864
	866
	1203
	1207
	1210
	1286
	1290
	1294
6V-9648	1468
6V-9746	247
	248
	250
	602
	608
	944

► **PRIMARY REFERENCE**

PART NUMBER INDEX

Part	Page
	948
	949
	950
	956
	958
6V-9806	310
6V-9829	958
	1027
6V-9830	246
	248
	250
6V-9833	134
	136
	138
6V-9837	124
	126
6V-9838	124
6V-9840	134
	136
6V-9850	942
	949
	958
6V-9872	124
	126
	796
6V-9873	124
	126
	264
	940
6W-0590	1404
6W-5233	1404
6W-5698	796
6W-8281	1404
6W-8502	1394
	►1404
6W-8505	►1196
	1404
6W-8506	1196
6Y-0091	218
	220
6Y-0206	1334
6Y-0255	►1194
6Y-0256	►1194
6Y-0259	►1074
	1194
6Y-0260	►1174
	1194
6Y-0265	1194
6Y-0275	1194
	►1195
6Y-0317	►1088
	1194
	1195
6Y-0471	793
	794
6Y-0473	1
	783
	784
	786
	788
	790
	792
	793
	794
	805
	806
	807
	808
	809
	810
	811
	812
	813
	814
	816
	818
	820
6Y-0617	►822
	839
6Y-0634	798
	800
6Y-0708	654
	1018
6Y-0717	662
	1044
6Y-0718	670
6Y-0722	1018
	►1044
6Y-0723	654
	656
	658
	►670
	1018
6Y-0724	662
	1044
6Y-0725	662
	670
	1044
6Y-0726	662
	670
	1044
6Y-0727	662
	1044
6Y-0728	662
	1044
6Y-0729	670
6Y-0744	662
	1044
6Y-0762	1074
6Y-0768	664
6Y-0771	540
	542
	544
	►664
6Y-0774	540
	542
	544
6Y-0775	540
	542
	544
6Y-0789	654
	656
	658
	1018
6Y-0889	802
	804
	►810
	839
	841
6Y-0890	►805
	839
	841
6Y-0891	810
	811
	812
6Y-0892	805
	806
	807
6Y-0893	805
	810
6Y-1011	1183
6Y-1101	602
	608
	614
	618
6Y-1102	602
	608
	614
	618
	622
6Y-1161	934
6Y-1180	695
6Y-1202	1104
	1191
	1192
	1193
6Y-1204	1191
	1192
	1193
6Y-1473	944
	948
	959
	1082
6Y-1577	792
6Y-1578	792
6Y-1579	793
	794
6Y-2044	1082
6Y-2057	792
	793
	794
6Y-2058	►792
	837
	838
6Y-2090	106
6Y-2130	547
6Y-2255	934
6Y-2546	598
6Y-2547	598
6Y-2549	602
	608
	614
	618
	622
6Y-2573	602
	608
	614
	618
	622
6Y-2652	1114
6Y-2762	654
	656
	658
	1018
6Y-2875	848
	850
6Y-2876	848
	850
6Y-2878	848
	850
6Y-2879	848
6Y-3233	1152
	1154
	1156
6Y-3484	630
	631
	848
	850
6Y-3567	974
6Y-3568	974
6Y-3682	1234
6Y-3712	1220
	►1326
6Y-3732	1235
6Y-4056	602
	608
6Y-4373	708
6Y-4374	709
6Y-4376	708
6Y-4378	709
6Y-5094	1350
	1352
6Y-5493	1152
	1154
	1156
6Y-5793	642
6Y-5888	644
6Y-6041	978
	982
6Y-6042	972
	978
6Y-6043	972
	978
	982
6Y-6044	978
	982
6Y-6140	1185
	►1191
6Y-6584	329
	337
	345
	353
	361
	369
6Y-6588	1074
6Y-6785	838
6Y-6786	838
6Y-6787	836
6Y-6788	836
6Y-7651	70
	73
	76
6Y-7652	70
	73
	76
6Y-7920	1076
6Y-8189	►793
	836
6Y-8456	956
6Y-8773	708

► PRIMARY REFERENCE

PART NUMBER INDEX

Part	Page
6Y-8777	709
6Y-8787	709
6Y-8865	1152
	1154
6Y-9287	1092
	1105

7

Part	Page
7B-1251	330
	337
	346
	354
	362
	370
7B-2564	1234
7B-2742	254
	264
	291
	292
7B-3028	848
	1044
7B-3235	94
	1070
	1088
7B-7525	1372
	1374
7C-0145	145
	163
	167
7C-0190	196
7C-0307	156
	158
	162
	166
	894
7C-0754	406
	408
7C-1068	172
	174
7C-1511	140
7C-1512	140
7C-1527	140
7C-1772	7
	9
	10
	▶140
7C-1843	158
	162
	166
7C-1933	158
	162
	166
7C-3095	166
7C-3386	192
7C-4485	6
	8
	10
	▶120
7C-4938	120
7C-5017	7
	8
	10
	▶96
7C-5287	318
	324
	326
7C-6460	6
	▶546
7C-6461	▶146
	546
7C-6514	26
	27
7C-7091	246
7C-7407	38
7C-8246	603
	609
	614
	618
	622
7C-9614	38
	40
7C-9770	194
	195
7D-1195	998
7D-1649	210
	550
	598
7D-4069	603
	609
	614
	618
	622
7D-4903	181
7D-5135	695
	736
7D-6055	736
7D-6922	508
	513
	517
7D-7233	184
	186
	188
	190
7D-7735	248
	250
	262
7D-9749	1027
7E-2721	86
7E-3205	200
7E-5346	252
	254
	291
	292
7E-5665	98
	99
7E-6508	530
7E-7312	48
	50
	52
	54
7E-9262	28
	30
	32
7F-0560	413
7F-2050	1202
	1210
7F-2060	1202
	1210
7F-3425	1086
7F-3488	484
	488
	494
7F-3491	484
	488
	494
7F-3525	484
	488
	495
7F-5711	692
7F-6112	746
	748
	754
7F-7621	320
	322
7F-8607	291
	292
	1257
	1261
7F-9223	858
	1277
7G-0362	1075
7G-0378	1074
7G-0535	329
	345
	353
	361
	369
7G-0603	1070
7G-0610	1070
7G-0611	1070
7G-0612	1070
7G-0613	1070
7G-0614	1070
7G-0615	1070
7G-0645	1070
7G-1060	329
	337
	344
	352
	360
	368
7G-1078	1070
7G-1180	▶1070
	1194
7G-1256	1074
7G-1257	1075
7G-1258	1076
7G-1259	1075
7G-1262	1174
7G-1264	1074
7G-1265	▶986
	1194
	1195
7G-1267	986
7G-1268	986
7G-1269	986
7G-1270	986
7G-1271	986
7G-1360	1086
7G-1744	1334
7G-1785	1334
7G-1786	1334
7G-1814	720
7G-1815	720
7G-1952	768
	770
	772
	774
	776
	778
	780
7G-1958	744
	774
	776
	778
	780
7G-2176	140
7G-2248	637
7G-2250	638
7G-2325	598
7G-2384	944
	948
	956
7G-2385	944
	948
7G-2386	943
	948
	957
7G-2387	944
	1102
7G-2388	943
	948
	957
7G-2390	942
	948
7G-2419	822
	824
	826
	828
	830
	832
	834
7G-2421	822
	824
	826
	828
	830
	832
	834
7G-2425	822
	824
	826
	828
	830
	832
	834
7G-2454	1234
7G-2476	630
7G-2500	1076
7G-2703	746
	748
7G-2704	746
	748
	754
7G-2812	678
	680
	682
7G-3316	1070

▶ PRIMARY REFERENCE

PART NUMBER INDEX

Part	Page
7G-3317	1070
7G-3411	1354
7G-3413	709
	934
7G-3414	934
7G-3415	934
7G-3441	646
7G-3832	974
	1138
	1140
7G-3833	974
	1138
	1140
7G-3834	974
	1138
	1140
7G-3907	815
	816
	817
	818
	820
7G-3945	680
	682
7G-3977	726
7G-3978	726
7G-3979	726
7G-3980	726
7G-4332	792
	793
	794
7G-4408	815
	817
7G-4766	822
	824
	826
	828
	830
	832
	834
7G-4786	▶1136
	1194
	1195
7G-4817	631
7G-4818	631
7G-4823	1334
7G-4824	1334
7G-4842	662
	1044
7G-4873	600
7G-4928	1354
	1358
7G-4993	602
	608
	614
	618
	622
7G-4998	554
	556
7G-5186	180
	181
7G-5221	815
	816
	817
	818
	820
7G-5403	1136
7G-5438	767
7G-5578	642
7G-5622	644
7G-5671	642
7G-5984	943
	948
	957
7G-5985	678
	680
	682
	957
7G-5986	943
	950
	957
7G-6059	642
7G-6114	642
7G-6115	642
7G-6171	708
7G-6176	1337
7G-6495	720
	722
7G-6503	720
	722
7G-6623	692
7G-6723	1354
	1358
7G-6724	1354
	1358
7G-6757	720
7G-6758	720
7G-6767	602
	608
	614
	618
	622
7G-6784	991
7G-6786	991
7G-6787	▶991
	992
	1102
7G-6788	▶992
	1102
7G-6916	1354
	1358
7G-6917	1354
	1358
7G-6989	736
7G-7156	695
	736
7G-7630	1234
7G-7684	228
	230
	232
7G-7714	1086
7G-7919	522
7G-8150	248
	250
	262
7G-8282	822
	824
	826
	828
	830
	832
	834
7G-8420	852
	854
	856
7G-8839	398
	402
7G-8947	680
	682
7G-9476	1044
7G-9709	768
	770
	772
	774
	776
	778
	780
7G-9913	737
7G-9998	1070
7H-1447	998
7H-4543	1274
7I-1334	14
7J-0204	329
	654
	656
	658
	1018
7J-1337	694
	716
	726
	728
7J-1338	694
	716
	726
	728
7J-1592	1027
7J-2086	920
	922
7J-2087	902
	904
	906
	908
	910
	912
	914
	916
	918
	920
	922
7J-2596	1026
7J-3296	750
	751
	752
	756
	757
	758
	759
	760
	761
7J-4083	912
	914
	916
	918
	920
	922
7J-4169	1104
	1126
	1128
7J-5225	680
	682
7J-6250	1089
7J-7844	1038
	1039
7J-8080	994
	996
7J-8814	709
7J-9018	854
	856
7J-9108	134
	136
	138
	246
	247
	248
	250
	262
	406
	408
	798
	800
7J-9250	902
7J-9884	1101
7K-1181	134
	136
	138
	152
	154
	247
	328
	336
	337
	344
	398
	402
	440
	442
	476
	481
	526
	1103
	1110
	1216
	1218
	1221
	1222
	1225
	1226
	1228
	1260
	1321
	1421
	1422
7K-3176	1252
	1257
	1261
7K-3222	1334
7K-6413	726
7K-6956	689
7K-9211	1090
	1092
	1094

▶ PRIMARY REFERENCE

PART NUMBER INDEX

Part	Page
	1096
	1098
	1104
7L-2894	484
	488
	494
7L-7262	161
	184
	186
	188
	190
7L-8170	1198
7L-8316	1274
7M-0324	484
	488
	494
7M-0325	484
	488
	494
7M-0326	484
	488
	494
7M-0327	484
	488
7M-0475	628
7M-1199	630
7M-1297	554
	556
	1041
	1042
7M-1674	202
	203
7M-5717	1027
7M-7219	1298
	1302
7M-7260	1074
	1174
7M-7410	158
	162
7M-8480	536
	630
	631
	678
	680
	682
7M-8485	132
	134
	136
	184
	186
	188
	190
	398
	402
	552
	554
	556
	602
	603
	608
	609
	615
	619
	623
	942
	949
	950
	956
	957
	958
	1026
	1032
	1036
	1070
	1075
7M-8651	484
	488
7M-9107	1104
	1191
	1192
	1193
7N-0060	328
	336
	344
	354
	370
	476
	480
7N-0210	410
	411
	412
7N-0296	474
7N-0719	329
	338
	345
	353
	361
	369
	▶499
7N-1210	108
7N-1277	184
	186
	188
	190
7N-1346	7
	9
	11
	▶108
7N-1430	180
7N-1447	180
7N-1448	180
7N-1459	180
7N-1464	180
7N-1564	1100
7N-1565	1100
7N-1639	181
7N-1996	1350
	1352
7N-2059	474
7N-2155	140
7N-2156	140
7N-2213	140
7N-2256	1309
	1313
	1317
	1320
7N-2257	1253
7N-2443	80
7N-2867	506
7N-3864	181
7N-4932	180
7N-5168	156
	894
7N-5274	329
	338
	345
	353
	361
	369
	476
	480
7N-5876	522
	526
7N-6252	120
7N-6253	120
7N-6391	78
7N-6494	491
	492
7N-7049	▶491
7N-7078	98
7N-7559	130
7N-7628	161
7N-7688	180
7N-7779	502
	1239
7N-7780	502
	1239
7N-7782	502
7N-7878	161
7N-9021	320
	322
7N-9023	320
	322
7N-9212	120
7N-9737	1239
7N-9801	474
7N-9802	96
7N-9943	414
7P-3895	1214
7P-4190	852
	854
	856
7R-8872	784
	788
	790
7S-1912	248
	250
	262
	976
7S-3916	678
	680
	682
	972
	978
	982
	1103
7S-3919	678
	680
	682
	972
	978
	982
	1103
7S-4244	1082
7S-4326	558
	562
	566
	570
	575
	579
	583
	587
	591
	595
7S-5003	197
7S-5005	28
	30
	32
	80
7S-6369	898
	912
	916
	926
7S-6997	670
7S-8767	163
	167
	546
7S-8920	942
	950
	957
	1000
	1002
	1006
	1010
	1012
	1103
7S-8921	942
	950
	957
	1000
	1002
	1006
	1010
	1012
	1103
7S-9203	992
	1115
7S-9372	1089
7T-0020	414
7T-0131	1354
	1358
7T-0134	1354
7T-0135	1355
	1358
7T-0136	1354
	1358
7T-0138	1354
	1358
7T-0145	1112
7T-0157	783
	786
7T-0159	805
	810
7T-0266	329
	336
	344
	353
	361
	369
	1324

▶ PRIMARY REFERENCE

PART NUMBER INDEX

Part	Page
7T-0374	815
7T-0375	815
	816
	817
	818
	820
7T-0376	815
7T-0597	1234
7T-0601	1234
7T-0688	810
7T-0715	793
	794
7T-0716	793
	794
7T-0717	793
	794
7T-0718	793
	794
7T-0719	792
	793
	794
7T-0720	792
	793
	794
7T-0723	▶836
	839
	841
	842
7T-0724	836
	838
7T-0779	1354
	1358
7T-0905	852
	854
	856
7T-0942	1456
	1460
7T-0961	783
	784
	786
	788
	790
7T-0969	328
	336
	344
	352
	360
	368
7T-0970	328
	336
	344
	352
	360
	368
7T-0998	792
	793
	794
7T-0999	792
	793
	794
7T-1000	836
	837
	838
7T-1068	1436
	▶1438
	▶1439
7T-1069	1437
	▶1440
	▶1441
7T-1078	1456
	1460
7T-1099	246
	310
	420
	422
	424
	425
	426
	427
	428
	429
	437
	438
	439
	440
	678
	680
	682
	700
	702
	704
	708
	709
	1112
	1203
	1207
	1210
	1264
	1266
	1286
	1290
	1294
	1329
	1354
	1358
	1366
7T-1330	1436
	1437
7T-1342	1054
7T-1354	678
	680
	682
7T-1776	695
	736
7T-1777	695
	736
7T-1778	695
	736
7T-1885	848
	850
7T-1890	1280
	1282
7T-2413	216
	218
7T-3359	822
	824
	826
	828
7T-3810	502
7T-3829	▶1000
	1004
	1008
	1014
	1015
7T-3877	776
	778
	780
7T-3912	968
7T-3913	968
7T-3914	968
7T-3915	968
7T-3916	968
7T-3926	822
	824
	826
	828
	830
	832
	834
7T-3927	822
	824
	826
	828
	830
	832
	834
7T-3928	822
	824
	826
	828
	830
	832
	834
7T-4129	774
	780
7T-4130	768
	770
	772
	776
	778
7T-4131	768
	770
	772
	774
	776
	778
	780
7T-4132	772
	774
	780
7T-4133	768
	770
	772
	774
	776
	778
	780
7T-4134	768
	770
	772
	774
	776
	778
	780
7T-4135	678
	680
	682
7T-4145	768
	770
	772
	774
	776
	778
	780
7T-4306	1280
7T-4385	700
	702
	704
7T-4501	1104
	1126
	1128
7T-4502	1104
	1126
	1128
7T-4532	1238
	1239
	1241
	1246
7T-4605	836
	837
7T-4606	▶836
7T-4607	837
7T-4608	▶837
7T-4761	1457
	1461
7T-4777	1152
	1154
7T-4809	1103
	1159
	1160
	1162
	1164
	1166
	1168
	1170
	1172
7T-4810	1159
	1160
	1162
	1164
	1166
	1168
	1170
	1172
7T-4890	1000
	1002
	1006
	1010
	1012
7T-4966	1131
	1132
7T-5066	1354
	1358
7T-5103	700
	702
	704
7T-5459	902
7T-5463	1082
7T-5856	1266
7T-5868	1264

▶ PRIMARY REFERENCE

PART NUMBER INDEX

Part	Page
7T-5869	1152
	1154
	1156
7T-5959	815
	816
	817
	818
	820
7T-6040	▶690
7T-6135	154
	1244
7T-6192	822
	824
	828
	830
	834
7T-6193	822
	826
	828
	832
	834
7T-6339	680
	682
7T-6347	682
7T-6799	503
7T-6992	642
7T-6994	848
	850
7T-7190	1092
7T-7222	1090
	1092
	1094
	1096
	1098
7T-7303	1092
7T-7305	1090
	1092
	1094
	1096
	1098
	1104
7T-7577	▶1064
	1130
7T-7578	1064
7T-7586	1064
7T-7777	330
	338
	346
	353
	361
	369
	477
	481
7T-7942	▶692
7T-8006	768
	770
	772
	774
	776
	778
	780
7T-8332	398
	402
7T-8341	1075
7T-8342	1075
7T-8556	664
7T-8712	1149
	▶1175
7T-8713	1150
	1151
	▶1176
7T-8772	1125
	▶1126
7T-8891	1420
	1424
7T-9009	680
	682
7T-9010	680
	682
7T-9014	678
	680
	682
	694
	716
	726
	728
7T-9105	957
7T-9123	472
	485
	489
	495
7T-9302	1456
	1460
7T-9309	815
	816
	817
	818
	820
7T-9310	1
7T-9328	▶1060
	1061
7T-9515	522
	527
7T-9612	944
	948
	957
7T-9802	680
	682
7T-9982	328
	338
	344
	352
	360
	368
	476
7U-4898	1372
	1374
7U-6358	144
7V-3728	1394
7V-5190	1404
7V-5191	1298
	1302
7V-8087	1354
	1358
7W-1096	200
7W-1208	197
7W-1659	12
	14
	16
	149
7W-1944	200
7W-2131	126
	1252
	1256
	1260
	1308
	1312
	1316
	1320
7W-2243	▶41
7W-2478	197
	198
7W-2872	▶194
7W-3145	200
7W-3379	156
	894
7W-3382	156
	894
7W-3447	48
	50
	52
	54
	161
	550
	944
	948
	957
7W-5157	132
7W-5532	180
7W-5823	399
	402
7W-5867	206
7W-5919	200
7W-5990	180
7W-6492	34
	40
	192
7W-6528	140
7W-6534	40
	100
	101
	158
	140
7W-7141	181
7W-7233	181
7W-7346	197
7W-9379	▶197
7W-9380	197
7W-9381	194
7W-9749	195
	1274
7X-0264	1034
7X-0275	1020
7X-0282	852
7X-0288	854
	856
	968
	978
	982
	1026
	1102
	1104
7X-0289	964
7X-0290	552
	603
	609
	615
	619
	623
	890
7X-0291	328
	336
	344
	352
	360
	368
7X-0293	318
	324
	326
	352
	360
7X-0295	180
7X-0301	1040
7X-0308	1026
	1032
	1036
7X-0311	1000
	1002
	1006
	1010
	1012
	1102
7X-0314	942
	950
	958
7X-0315	942
	950
	956
	1000
	1002
	1006
	1010
	1012
	1102
7X-0318	958
7X-0323	759
	760
	761
7X-0325	398
	402
	695
	943
	950
	957
	972
	978
	982
	1102
7X-0326	603
	609
	695
	736
	1032
	1036
7X-0328	70
	74
	75
	76
	716
	728

▶ **PRIMARY REFERENCE**

PART NUMBER INDEX

Part	Page
	735
	942
	950
	956
	1027
7X-0331	943
	950
	957
7X-0340	218
	220
7X-0341	216
	222
7X-0342	330
	336
	345
	776
	778
	780
7X-0343	111
	112
	736
	1143
7X-0344	694
7X-0345	730
	768
	770
	772
	774
	776
	778
	780
	956
	1104
	1126
	1128
7X-0346	318
	324
	326
	726
	944
	950
	958
	1242
	1244
	1248
7X-0347	684
	686
	730
	942
	950
	956
7X-0349	692
	944
	950
7X-0350	181
	959
7X-0352	1042
7X-0353	943
	944
	950
	956
7X-0356	944
	950
7X-0358	944
	950
	956
	1042
7X-0365	722
	1090
	1092
	1094
	1096
	1098
	1104
	1366
7X-0366	1366
7X-0371	964
7X-0375	216
	222
7X-0379	1064
	1102
	1130
	1159
	1160
	1162
	1164
	1166
	1168
	1170
	1172
7X-0381	972
	978
	982
	1102
7X-0386	815
	816
	817
	818
	820
7X-0392	1354
	1358
7X-0394	1102
	1114
7X-0396	1102
	1106
	1107
7X-0403	690
	720
	722
	1064
	1102
7X-0405	720
	722
	802
	803
	804
	1102
	1104
	1116
	1118
	1120
	1122
	1126
	1128
7X-0414	722
7X-0418	720
	722
7X-0420	762
	763
7X-0422	720
	722
	762
	763
7X-0429	1364
	1365
7X-0439	1104
	1116
	1118
	1120
	1122
7X-0444	720
	722
	802
	803
	804
7X-0448	318
	324
	326
	1112
	1242
	1244
	1248
7X-0449	1103
	1106
	1107
7X-0469	1214
	1376
	1377
	1378
7X-0515	978
	982
	1105
	1126
	1128
7X-0525	1103
	1114
7X-0531	720
	722
	746
	748
	754
	762
	763
7X-0533	746
	748
	754
	1364
	1365
7X-0537	1105
	1116
	1118
	1120
	1122
	1126
	1128
7X-0549	720
	722
7X-0562	472
	484
	488
	494
7X-0572	972
	978
	982
	1103
	1354
	1359
7X-0575	1282
7X-0578	886
	888
	890
	1266
7X-0582	424
	425
	439
	440
	708
	1354
	1359
	1366
7X-0584	730
7X-0589	1000
	1002
	1006
	1010
	1012
	1103
7X-0590	746
	748
	754
7X-0591	318
	324
	326
7X-0603	1214
	1377
	1378
7X-0608	1197
	1198
7X-0616	1105
	1116
	1118
	1120
	1122
7X-0618	1334
7X-0620	138
7X-0766	741
7X-0772	247
	310
	700
	702
	704
	1261
	1280
	1282
	1321
	1334
7X-0818	376
	377
	378
7X-0871	126
7X-1121	671
7X-2031	463
7X-2049	1320
7X-2533	152
	154
7X-2537	673
	674
7X-2541	652
	878
7X-2715	926

PART NUMBER INDEX

Part	Page
7X-3178	228
	230
	232
7X-3182	1456
	1460
7X-3351	1034
7X-3353	322
7X-3373	485
	489
	494
7X-3374	1338
	1340
	1342
7X-3392	603
	609
	615
	619
	623
	1334
7X-6315	389
	390
	392
	393
	394
7X-7644	1468
7X-7700	308
	313
7X-7702	1428
	1432
7X-7729	844
	1234
7X-7731	102
	158
	162
	166
	180
7X-7763	1456
	1460
7X-7888	860
	862
	864
7X-7927	964
	1422
7X-7928	964
	1422
7X-7929	964
	1422
7X-7930	964
	1422
7X-7931	964
7X-7958	184
	186
	188
	190
	398
	402
7Y-2853	694
7Y-3281	1421
	1422

8

Part	Page
8B-1312	630
	1070
8B-2327	12
	14
	16
	18
8B-4338	1350
	1352
	1456
	1460
8B-4624	247
	702
	704
8B-6561	265
8B-8439	1075
8C-3075	598
8C-3077	602
	608
	615
	619
	623
8C-3078	882
8C-3089	485
	489
	494
8C-3093	615
	619
	623
8C-3100	172
	174
8C-3121	116
	964
8C-3221	1468
8C-3334	506
8C-3442	1234
8C-3445	550
8C-3446	550
	603
	609
	614
	618
	622
	998
8C-3447	603
	609
	614
	618
	622
8C-3451	998
8C-3681	184
	186
	188
	190
8C-3756	1202
	1206
	1210
	1264
	1266
	1286
	1290
	1294
8C-3992	1376
8C-4427	1277
8C-4428	1277
8C-4436	694
	698
	706
	736
	942
	950
	957
	1242
	1244
	1248
8C-4586	1202
	1206
	1210
	1286
	1290
	1294
8C-5060	1457
	1461
8C-5063	310
8C-5219	898
8C-5222	70
	73
	76
8C-5230	550
	998
8C-5608	228
	230
	232
	1350
	1352
8C-5917	329
	336
	353
	361
	369
	476
	480
8C-6354	506
	508
	512
	516
8C-6358	413
8C-6561	330
	582
	586
	590
	595
8C-6711	1050
8C-6761	631
8C-6874	126
8C-6913	558
	562
	566
	570
	574
	578
	582
	586
	590
	594
	815
	816
	817
	818
	820
8C-7514	247
	248
	250
8C-7581	328
	336
	344
	352
	360
	368
8C-8451	1202
	1206
	1286
	1290
8C-8514	1110
8C-8762	246
	248
	250
8C-8817	634
8C-8843	1118
	1122
8C-8844	218
	220
8C-8902	1468
8C-8950	1402
8C-8988	124
	126
8C-9052	1402
8C-9121	912
	916
	926
8C-9660	485
	489
	494
8D-3508	709
8D-3932	1252
	1257
	1261
8D-4771	558
	562
	566
	570
	574
	578
	582
	586
	590
	594
8D-5898	964
8D-7209	958
8E-0381	956
8E-0618	531
	533
	534
8E-0911	964
8E-0912	943
	948
	957
8E-0992	708
8E-1040	968
8E-1041	968
8E-1042	968
	1104
8E-1043	968
	1104
8E-1118	1305
8E-1144	958
8E-1290	603
	609

► PRIMARY REFERENCE

PART NUMBER INDEX

Part	Page
	614
	618
	622
8E-1291	603
	609
8E-1356	700
	702
	704
	1282
8E-1378	1103
	1106
	1107
8E-1597	1185
8E-1866	978
8E-1867	978
8E-2087	1180
8E-2173	1066
	1068
	▶1162
	▶1164
8E-2485	689
8E-2497	1350
	1352
8E-2514	1350
	1352
8E-2589	1428
	1432
8E-2593	1456
	1460
8E-2646	1329
	1354
	1358
8E-2685	1235
8E-2729	631
8E-2827	768
	770
	772
	774
	776
	778
	780
8E-2900	772
	774
	780
8E-2901	772
	774
	780
8E-2902	772
	774
	780
8E-3026	662
	1044
8E-3124	558
	562
	566
	570
	575
	579
	583
	587
	591
	595
8E-3129	▶600
8E-3185	1280
8E-3241	431
	432
8E-3249	1354
	1358
8E-3250	1280
	1282
	1354
	1358
8E-3270	1220
	▶1307
8E-3271	1307
8E-3272	1307
8E-3273	1307
8E-3274	1307
8E-3277	1307
8E-3278	1307
8E-3280	1307
8E-3284	1220
	▶1305
8E-3430	124
	126
8E-3446	1435
	▶1442
8E-3447	1435
	▶1443
8E-3581	1152
	1154
8E-3582	1152
	1154
8E-3583	1152
	1154
8E-3584	1152
	1154
8E-3599	1152
	1154
8E-3600	1152
	1154
8E-4198	1175
	1176
8E-4199	1175
	1176
8E-4260	328
	336
	346
	354
	362
	476
8E-4541	1177
	1178
	1181
8E-4542	1177
	1178
	1181
8E-4815	726
8E-4836	1336
8E-5044	1376
8E-5113	1234
	▶1435
8E-5114	1234
	▶1435
8E-5170	156
	894
8E-5922	1235
8E-5923	1235
8E-5926	1235
8E-5931	1235
8E-5932	1234
8E-5933	1234
8E-5934	1329
	1354
8E-5956	1280
8E-5959	1280
	1282
8E-5962	1112
8E-5975	1280
	1282
	1354
	1358
8E-5978	1082
	1354
	1358
8E-6248	▶815
	838
	839
8E-6249	▶824
	838
8E-6250	▶826
	839
8E-6251	▶768
	838
8E-6252	▶770
	839
8E-6253	▶838
	842
8E-6254	▶839
	843
8E-6433	1044
8E-6619	805
	806
	807
	808
	809
	810
	811
	812
	813
	814
8E-6753	1159
	1162
	1166
	1170
8E-6757	732
8E-6834	1334
8E-6856	1428
	1432
8E-6866	732
8E-6877	1334
8E-6887	1421
	1422
8E-6914	768
	772
8E-6915	770
	772
8E-6927	666
	668
8E-7111	976
8E-7112	976
8E-7118	474
8E-7235	1334
8E-7236	1334
8E-7237	1334
8E-7238	1334
8E-7239	1334
8E-7301	1420
8E-7302	▶1420
	1421
	1422
8E-7364	1108
	1112
8E-7791	1334
8E-7792	1421
	1422
8E-7793	1421
	1422
8E-7802	▶1277
8E-7804	892
	▶1108
8E-7838	646
8E-7928	▶794
	836
	837
8E-8130	1376
8E-8292	1420
	1424
8E-8293	1420
8E-8304	630
8E-8310	631
8E-8316	644
8E-8415	1191
8E-8417	1192
	1193
8E-8630	684
	686
8E-8914	1126
	1128
8E-9010	1150
	▶1154
8E-9052	▶688
8E-9253	1280
	1282
8E-9289	684
	686
	692
8E-9299	1112
8E-9546	▶1367
8E-9570	▶732
	1154
8E-9592	1334
8E-9595	1334
8E-9607	1329
	1354
	1358
8E-9654	1305
8E-9656	1305
8E-9736	1364
8E-9738	1364
8E-9869	884
	▶1110
8E-9938	732
8E-9947	732
	733
8F-0394	1069
8F-1434	138
	472
	485
	489

▶ PRIMARY REFERENCE

PART NUMBER INDEX

Part	Page
	494
	504
	522
	527
8F-1462	1344
8F-1846	180
8F-5340	852
	854
	856
8F-6437	942
	950
	957
8F-6711	1076
8F-7702	844
8F-8544	631
8F-8733	644
	783
	784
	786
	788
	790
8F-9516	805
	806
	807
	808
	809
	810
	811
	812
	813
	814
8F-9836	310
	708
	964
8G-4386	678
	680
	682
8G-9794	216
	222
8H-2262	783
	786
8H-3127	463
8H-5303	499
8H-5306	499
8H-5724	634
8H-5727	689
8H-8769	379
	380
8J-1196	709
8J-1699	1020
	1034
8J-2283	497
8J-4351	120
	882
8J-4386	926
	928
	930
8J-4916	708
	709
8J-5326	1132
8J-5914	536
	943
	949
8J-6913	998
8J-7236	709
	1366
8J-7360	1026
8J-7366	1026
8J-7462	1026
8J-7466	1027
8J-7467	1027
8J-8322	644
8J-8621	1058
	1059
8J-9212	634
8J-9383	1334
8K-1433	1305
8K-2692	631
8K-5130	1103
	1131
	1132
8L-2746	124
	126
	130
	247
	881
	1051
	1052
	1053
	1056
8L-2777	1046
8L-2779	124
	126
	264
8L-2786	21
	22
	74
	124
	126
	264
	270
	272
	274
	276
	278
	280
	282
	284
	464
	465
8L-3282	143
	144
8L-3441	98
	99
8L-5008	12
	14
	16
	18
8L-8413	480
	1298
	1302
	1410
	1414
	1428
	1432
	1456
	1460
8M-0456	506
	508
	512
8M-0505	516
	1023
8M-0755	184
	186
	188
	190
8M-1013	662
	664
	1044
8M-1865	380
	654
	656
	658
	1018
8M-1871	1070
8M-2530	1041
	1042
8M-2537	666
	668
8M-2770	184
	186
	188
	190
8M-2771	860
	862
	864
8M-2772	520
8M-2773	124
	127
	264
8M-3121	398
	402
8M-3267	1410
	1414
8M-4389	848
	850
8M-4390	602
	608
	615
	619
	623
8M-4395	631
8M-4432	540
	542
	544
8M-4433	646
8M-4435	986
	1086
8M-4438	650
	877
8M-4443	615
	619
	623
8M-4446	654
	656
	658
	1018
8M-4986	540
	542
	544
	666
	668
8M-4987	1088
8M-4989	646
8M-4992	602
	608
	615
	619
	623
8M-5249	662
	1044
8M-5252	992
	1115
8M-5253	644
8M-5254	650
	662
	877
	1044
8M-5260	1146
8M-5266	536
8M-5661	615
	619
	623
	631
8M-6393	552
	554
	556
8M-6802	234
	242
	244
8M-7145	1032
	1036
8M-8157	603
	609
	615
	619
	623
8M-8489	140
	636
	638
	991
8M-8948	152
	154
	506
	508
	513
	517
8M-9124	90
8N-0301	180
8N-0396	120
8N-0397	120
8N-0422	96
8N-0423	96
8N-0605	82
	86
8N-0610	120
8N-0612	120
8N-0614	6
	8
	10
	►82
8N-0634	82
8N-0744	6
	►893
8N-0745	►206
8N-0788	161
8N-0869	328
	330
	344
	346

► PRIMARY REFERENCE

PART NUMBER INDEX

Part	Page
	352
	353
	360
	361
	368
	369
	476
	477
	480
	481
8N-0878	200
8N-0879	200
8N-0881	156
	894
8N-0882	156
	894
8N-0934	1100
8N-0935	1100
8N-1537	506
	508
8N-1594	210
8N-1608	98
8N-1619	210
8N-1725	328
	344
	352
	360
	368
	476
	480
8N-1825	329
	337
	345
	353
	361
	369
8N-2104	120
8N-2113	156
	894
8N-2258	200
8N-2282	156
	894
8N-2299	192
8N-2306	156
	894
8N-2368	210
8N-2574	200
8N-2705	192
8N-2729	202
	203
8N-2730	202
	203
8N-2745	202
	203
8N-5827	12
	16
8N-6739	120
	550
8N-6740	120
8N-7257	181
8N-7507	▶1100
	1102
8N-7806	82
	86
8N-7953	210

Part	Page
8N-7954	210
8N-8753	476
	480
	▶492
8N-8846	184
	188
8N-9103	212
	215
8N-9104	212
	215
8N-9961	202
	203
8P-0015	1144
8P-0021	805
	810
8P-0056	631
8P-0058	536
8P-0325	1144
8P-0345	1144
8P-0346	1144
8P-0612	310
	700
	708
	709
	736
8P-0847	1074
8P-0976	1070
8P-2391	1101
8P-2392	1101
8P-2397	▶1101
8P-2933	1101
8P-3741	1075
8P-4047	631
8P-4299	1146
8P-4617	631
8P-4661	783
	784
	786
	788
	790
8P-5056	644
8P-5141	1202
	1206
	1210
	1286
	1290
	1294
8P-5229	642
8P-5264	822
	824
	826
	828
	830
	832
	834
8P-5265	822
	824
	826
	828
	830
	832
	834
8P-5374	816
8P-5698	558
	562

Part	Page
	566
	570
	574
	578
	582
	586
	590
	594
8P-6099	152
	154
8P-6334	680
	682
8P-6363	1266
8P-6817	642
8P-7598	678
	680
	682
	694
	716
	726
	728
8P-8360	848
	850
8P-8542	1364
8P-8780	642
8P-8896	1112
8P-9142	750
	751
	752
	756
	757
	758
	759
	760
	761
8P-9265	642
8P-9266	642
8P-9296	662
	1044
8P-9382	748
	754
8P-9770	1061
	1063
	1090
	1092
	1094
	1107
	1131
	1132
	1152
	1154
	1156
	1185
	1186
	1187
	1188
	1190
8P-9859	943
	948
	957
8Q-1963	318
8Q-1996	4
	▶195
8Q-1997	2
	195

Part	Page
8R-1876	1404
8R-1877	1404
8R-1878	1404
8R-1883	1404
8R-1884	1404
8R-5287	1394
8R-7699	16
	18
8S-0023	268
	958
8S-0024	268
	958
8S-0934	1368
8S-0948	124
	127
	181
8S-2332	491
	492
8S-2634	330
	338
	345
	354
	362
	370
8S-3371	1074
8S-4211	329
	337
	346
	353
	361
	369
8S-4212	114
8S-4756	815
	816
	817
	818
	820
8S-5383	318
	324
	326
8S-5653	784
8S-7048	1082
8S-7803	1298
	1302
	1372
	1374
8S-9075	1074
8S-9076	1074
8S-9129	1136
8S-9130	536
	646
	1136
8S-9191	120
	630
	1086
8T-0075	943
	949
	959
8T-0130	124
	126
8T-0151	330
	336
	345
	354
	362

▶ PRIMARY REFERENCE

PART NUMBER INDEX

Part	Page
	370
8T-0154	1202
8T-0197	942
	950
	956
8T-0208	768
	770
	772
	774
	776
	778
	780
8T-0267	860
	862
	864
8T-0318	1234
8T-0319	1457
8T-0320	1456
8T-0328	320
	322
	472
	485
	489
	494
	504
	854
	856
	860
	862
	864
	1382
	1384
8T-0337	415
8T-0404	262
8T-0687	1436
	1437
	1447
	1448
8T-0741	1108
	1112
8T-0788	124
	127
8T-0789	1428
8T-1118	1428
8T-1119	1428
8T-1141	630
	631
8T-1172	844
8T-1444	631
8T-1572	1334
8T-1579	695
	716
	728
8T-1674	602
	608
	614
	618
	622
8T-1686	270
	272
	274
	276
	278
	280
	282
	284
8T-1739	1456
	1460
8T-1786	798
8T-1788	898
	900
8T-1905	937
	943
	950
	958
	976
	1104
8T-1979	1235
8T-1980	1235
8T-1981	822
	824
	826
	828
	830
	832
	834
8T-2174	1456
	1460
8T-2225	328
	329
	330
	338
	344
	345
	346
	352
	353
	354
	360
	361
	362
	368
	369
	370
	476
	477
	480
	481
8T-2275	998
8T-2353	796
8T-2501	329
	337
	344
	352
	360
	368
	536
	547
	646
	1082
	1234
	1250
	1410
	1414
8T-2502	127
	178
	180
	198
	210
	228
	230
	232
	310
	329
	336
	344
	353
	361
	369
	431
	432
	558
	562
	566
	570
	575
	579
	583
	587
	591
	595
	678
	680
	682
	695
	716
	728
	852
	854
	940
	968
	1104
	1108
	1112
	1116
	1118
	1120
	1122
	1252
	1256
	1260
	1308
	1312
	1316
	1321
	1334
8T-2530	406
	408
8T-2561	694
	700
	702
	704
	736
	979
	983
	1103
	1234
8T-2658	844
8T-2895	1277
8T-3490	798
	800
	844
	860
	862
	864
	1264
	1266
	1414
8T-3491	248
	250
	262
8T-3518	413
8T-3519	413
8T-3561	1234
8T-3597	1264
	1266
8T-3611	942
	949
8T-3612	844
	860
	862
	864
8T-3647	652
	878
8T-3848	1234
8T-3994	1264
8T-4121	726
	845
	860
	862
	864
	974
	1264
	1266
8T-4122	180
	318
	324
	326
	330
	337
	346
	694
	708
	716
	726
	728
	730
	736
	768
	770
	772
	774
	776
	778
	780
	942
	943
	950
	956
	1103
	1128
	1242
	1244
	1248
8T-4133	845
	1264
	1266
8T-4136	845
8T-4137	860
	862

► **PRIMARY REFERENCE**

PART NUMBER INDEX

Part	Page
	864
	1264
	1266
8T-4138	860
	862
	864
	1350
	1352
8T-4139	1252
	1256
	1261
8T-4149	603
	609
8T-4167	852
	854
	856
	1105
	1126
	1128
8T-4171	1280
	1282
	1350
	1352
8T-4177	652
	878
8T-4189	845
	1203
	1211
	1287
	1291
	1295
8T-4192	1264
	1266
8T-4195	845
8T-4198	1264
8T-4200	866
8T-4205	134
	138
	154
	228
	230
	232
	320
	322
	330
	337
	346
	354
	362
	370
	477
	481
	484
	488
	494
	506
	508
	513
	517
	523
	526
	844
	1038
	1039
	1082

Part	Page
	1202
	1206
	1210
	1216
	1221
	1225
	1228
	1264
	1266
	1286
	1290
	1294
	1307
	1309
	1313
	1317
	1350
	1352
	1354
	1359
	1382
	1384
	1421
	1422
	1426
	1428
	1432
8T-4222	1274
8T-4223	57
	58
	59
	62
	63
	64
	65
	66
	70
	74
	75
	76
	132
	150
	151
	152
	154
	181
	184
	186
	188
	190
	216
	218
	220
	222
	224
	226
	308
	318
	324
	326
	329
	337
	338
	345
	353

Part	Page
	361
	369
	406
	408
	420
	422
	437
	438
	476
	481
	559
	563
	566
	570
	575
	579
	583
	587
	591
	595
	600
	602
	603
	608
	609
	615
	619
	623
	646
	684
	686
	694
	702
	704
	716
	724
	726
	728
	730
	734
	735
	736
	746
	748
	754
	759
	760
	761
	768
	770
	772
	774
	776
	778
	780
	790
	796
	852
	854
	856
	934
	943
	951
	956
	972

Part	Page
	974
	976
	978
	982
	988
	1000
	1002
	1006
	1010
	1012
	1027
	1032
	1036
	1103
	1138
	1140
	1224
	1234
	1242
	1244
	1248
	1252
	1256
	1260
	1264
	1266
	1308
	1312
	1316
	1321
	1324
8T-4224	116
	330
	376
	377
	378
	426
	427
	428
	429
	430
	431
	432
	474
	504
	582
	586
	590
	595
	673
	674
	845
	866
	1026
	1103
	1216
	1218
	1221
	1222
	1226
	1362
8T-4226	708
8T-4777	1444
	1446
8T-4835	57

PART NUMBER INDEX

Part	Page	Part	Page	Part	Page	Part	Page
	58		324		926		222
	59		326		928		694
	62		328		930		722
	63		336		934		964
	64		337		937		1366
	65		344		938	8T-4999	1468
	66		352		942	8T-5004	858
	132		360		943		1277
	152		368		951	8T-5050	248
	154		398		957		250
	318		402		964		262
	324		406		968	8T-5071	776
	326		408		972		778
	602		422		974	8T-5360	934
	603		426		976		942
	608		427		978		943
	609		428		982		951
	615		440		988		957
	619		442		1000		976
	623		520		1002		1000
	692		523		1006		1002
	694		526		1010		1006
	706		538		1012		1010
	735		547		1026		1012
	790		552		1032		1026
	1242		554		1036		1032
	1248		556		1058		1036
	1252		558		1059		1103
	1257		562		1082		1368
	1261		566		1103		1369
8T-4896	12		570		1105		1370
	14		575		1108		1456
	16		579		1112		1460
	18		583		1214	8T-5361	218
	70		587		1242		220
	76		591		1244		690
	116		595		1248		720
	124		600		1250		722
	127		602		1252		730
	134		603		1256		746
	136		608		1260		748
	138		609		1276		754
	150		615		1308		802
	151		619		1312		803
	154		623		1316		804
	180		646		1321	8T-5383	1421
	184		678		1324		1422
	186		680		1327		1426
	188		682		1338	8T-5391	1277
	190		694		1340	8T-5400	1428
	198		716		1342		1432
	207		728		1376	8T-5410	844
	210		796		1428	8T-5413	1264
	218		852		1432	8T-5911	310
	220		854		1456		706
	222		856		1460		708
	224		886	8T-4908	845		709
	226		888	8T-4983	398		722
	247		890		402	8T-5912	310
	248		912	8T-4984	159		706
	250		914		163		708
	291		916		167		709
	310		918	8T-4986	180		722
	313		920	8T-4994	144		1138
	318		922		216		1140

PART NUMBER INDEX

Part	Page
8T-6342	502
8T-6466	1253
	1256
	1260
	1308
	1312
	1316
	1321
8T-6631	1202
	1206
	1210
8T-6638	248
	250
	262
8T-6675	180
8T-6685	1266
8T-6744	912
	914
	916
	918
8T-6745	926
	928
	930
8T-6747	902
	904
	906
	908
	910
8T-6757	28
	30
	32
	38
	40
	100
	101
8T-6761	22
	90
	96
	159
	163
	167
	399
	403
8T-6762	102
	158
	162
	166
	536
	666
	668
8T-6763	38
	40
8T-6764	48
	50
	52
	54
	90
	158
	162
	166
	172
	174
	176
	181
8T-6765	90
	200
8T-6767	143
	144
	156
	894
8T-6871	180
	708
8T-6876	248
	250
	262
	264
	938
	940
8T-6907	310
8T-6935	1422
8T-6936	1421
8T-7008	410
	411
	412
	886
	888
	940
	974
	1104
8T-7371	1065
	1066
	1067
	1068
8T-7521	938
8T-7529	798
	800
8T-7547	673
	674
8T-7566	700
	702
	704
	1282
	1346
	1347
8T-7934	845
8T-7971	398
	402
	602
	608
	615
	619
	623
	708
8T-8382	926
	928
	930
8T-8383	902
	912
	914
	916
	918
	920
	922
8T-8389	912
	916
	926
8T-8729	158
	162
	166
	264
	328
	329
	336
	344
	345
	352
	353
	360
	361
	368
	369
	414
	416
	417
	443
	444
	445
	446
	447
	448
	449
	450
	463
	466
	467
	469
	470
	474
	480
	504
	522
	526
	858
	876
	880
	888
	890
	1048
	1051
	1052
	1053
	1054
	1056
	1202
	1203
	1206
	1253
	1256
	1260
	1286
	1287
	1290
	1291
	1308
	1312
	1316
	1320
	1330
	1331
	1332
	1452
	1454
	1456
	1460
8T-8730	48
	50
	52
	444
	453
	454
	455
	456
	464
	465
	522
	671
	1203
	1287
	1291
8T-8737	74
	152
	154
	504
	506
	508
	512
	516
	522
	880
	1054
	1202
	1206
	1211
	1280
	1282
	1286
	1290
	1294
	1428
	1432
	1452
	1454
	1457
	1461
8T-8908	330
	337
	346
	354
	362
	370
	695
	1038
	1039
8T-8911	1103
8T-8914	1235
8T-8915	554
	556
	942
	951
	957
8T-8916	934
	942
	943
	951
	956
8T-8917	70
	73
	76
	246
	398

PART NUMBER INDEX

Part	Page
	402
	559
	563
	566
	570
	575
	579
	583
	587
	591
	595
	615
	619
	623
	694
	698
	708
	726
	737
	768
	770
	772
	774
	776
	778
	780
	942
	951
	957
	972
	974
	978
	982
	988
	1103
	1138
	1140
	1159
	1160
	1162
	1164
	1166
	1168
	1170
	1172
	1252
	1257
	1261
8T-8919	74
	151
	216
	218
	220
	222
	224
	226
	318
	324
	326
	602
	608
	615
	619
	623
	646

Part	Page
	694
	720
	722
	852
	854
	856
	1042
	1324
8T-8920	154
	181
	602
	608
	615
	619
	623
	1244
8T-8924	216
	222
	708
8T-9006	844
8T-9041	1027
8T-9048	1234
8T-9049	1234
8T-9101	180
8T-9312	1354
	1359
8T-9364	152
	154
	1082
	1354
	1359
	1421
	1422
	1426
8T-9367	136
	138
	523
	526
	845
	1309
	1313
	1317
8T-9368	845
	1274
8T-9371	702
	704
	1214
8T-9377	124
	127
	246
	248
	250
	262
	600
	603
	609
	615
	619
	623
8T-9378	262
8T-9379	943
	951
	957
	976
	1082

Part	Page
8T-9380	976
8T-9383	1224
8T-9384	603
	609
	615
	619
	623
8T-9386	134
	136
8T-9389	724
	772
	774
	780
8T-9391	976
8T-9393	716
	726
	728
	978
	982
	1103
8T-9396	943
	951
	958
8T-9397	424
	425
	439
	440
8T-9398	726
8T-9399	708
8T-9400	558
	562
	566
	570
	574
	578
	582
	586
	590
	594
	972
	978
	982
	1103
8T-9407	481
8T-9412	559
	563
	574
	578
	582
	586
	590
	594
8T-9496	695
	716
	728
	1276
8T-9530	152
	154
	398
	402
8T-9655	376
	377
	378
	379
	380

Part	Page
8T-9757	329
	336
	353
	361
	369
	476
	480
8T-9762	320
8V-0442	126
8V-0622	329
	336
	345
	353
	361
	369
	476
	480
8V-4881	1196
8V-5279	1138
8W-2543	937
8W-2957	942
	1102
8W-3188	943
	948
	959
8W-4710	246
	408
8W-5729	246
	408
8W-9912	649
8Y-3792	►1368
	1379
	1388
	1391
8Y-3966	741
8Y-3998	741
8Y-4002	1394
8Y-4207	1394
8Y-4208	1394
8Y-5747	741
8Y-5874	►1272
	1379
	1380
	1381
	1388
	1389
	1390
8Y-5877	1272
	1273
8Y-5889	1388
	1391
	1397
8Y-5891	1374
8Y-5892	1348
8Y-5903	1344
8Y-5928	1372
	1374
8Y-5929	1372
	1374
8Y-5930	1372
	1374
8Y-5931	1372
	1374
8Y-5932	1372
	1374

► PRIMARY REFERENCE

PART NUMBER INDEX

Part	Page
8Y-5936	1372
	1374
8Y-5937	1372
	1374
8Y-5938	1372
	1374
8Y-5943	1272
8Y-5944	1408
	1418
8Y-5945	1298
	1302
8Y-5947	1272
	1273
	1372
	1374
8Y-5953	1368
	1369
8Y-5957	1372
8Y-5959	▶1273
	1391
	1392
	1393
8Y-5960	1273
8Y-5965	1408
	1418
8Y-5972	1344
8Y-5976	▶1372
	1391
	1392
	1393
8Y-5979	1372
8Y-5981	1372
	1374
8Y-5986	▶1374
	1379
	1380
	1381
	1388
	1389
	1390
8Y-5992	▶1348
	1372
	1374
8Y-5995	1348
8Y-5998	1348
8Y-5999	1348
8Y-6006	1344
8Y-6010	1344
8Y-6012	1408
	1418
8Y-6014	1408
	1418
8Y-6022	1408
8Y-6023	1408
8Y-6024	1408
	1418
8Y-6029	1298
8Y-6041	1298
	1302
8Y-6045	1298
	1302
8Y-6046	1298
	1302
8Y-6047	1298
	1302
8Y-6051	1372
	1374
8Y-6060	1298
	1302
8Y-6062	1298
	1302
8Y-6063	1298
	1302
8Y-6064	1298
	1302
8Y-6066	1298
	1302
8Y-6067	1298
	1302
8Y-6068	1298
	1302
8Y-6069	1298
	1302
8Y-6138	1220
	▶1388
	▶1389
	▶1390
8Y-6179	1367
	1376
	1377
	▶1391
	▶1392
	▶1393
8Y-6277	1382
	1384
8Y-6343	1456
	1460
8Y-6364	216
	218
	248
	250
	262
	308
	312
	477
	481
	694
	700
	702
	704
	708
	736
	896
8Y-6388	1283
8Y-6400	694
	716
	728
	▶741
	1276
8Y-6419	1443
8Y-6420	1443
	▶1444
8Y-6422	1444
8Y-6423	1442
	1443
	1444
	1446
8Y-6424	1442
	1443
8Y-6430	1442
	1443
	1444
	1446
8Y-6431	1446
8Y-6432	1442
8Y-6433	1442
	▶1446
8Y-6448	1438
	1439
	1440
	1441
8Y-6454	1444
	1446
8Y-6455	1444
	1446
8Y-6456	1234
	▶1447
	▶1448
8Y-6459	1442
	1443
	1444
	1446
8Y-6460	1444
	1446
8Y-6461	1444
	1446
8Y-6462	1442
	1443
8Y-6826	1447
	1448
	▶1449
	▶1450
8Y-6827	1449
	1450
8Y-6828	1447
	1448
8Y-6833	1372
	1374
8Y-6834	1372
	1374
8Y-6839	1436
	1437
	1438
	1439
	1440
	1441
	1447
	1448
	1449
	1450
8Y-6859	1298
	1302
8Y-6860	1298
	1302
8Y-6910	1442
	1443
	1444
	1446
8Y-6917	1410
	1414
8Y-6922	1410
8Y-6928	1410
	1414
8Y-6933	1372
	1374
8Y-6957	1404
8Y-8306	741

9

Part	Page
9B-1948	1064
	1103
9B-2052	695
	737
9B-7233	152
	320
	322
	328
	336
	344
	352
	360
	368
	503
	506
	508
	509
	512
	516
	852
	854
	856
	1252
	1257
	1260
9B-7237	57
	58
	59
	62
	63
	64
	65
	66
	70
	75
	76
	124
	127
	150
	151
	154
	180
	198
	202
	203
	228
	230
	232
	246
	248
	250
	291
	310
	328
	398
	402
	422
	602
	608

▶ PRIMARY REFERENCE

PART NUMBER INDEX

Part	Page
	615
	619
	623
	706
	708
	709
	720
	722
	726
	736
	856
	964
	972
	974
	978
	982
	1103
	1140
	1253
	1256
	1260
	1274
	1308
	1312
	1316
	1321
	1334
9C-2177	1404
9C-5681	1394
9C-5986	2
	▶1394
9D-0630	216
	218
	220
	222
	224
	226
9D-1829	974
9D-3768	434
	435
	436
	1216
	1218
	1221
	1225
	1226
	1228
	1428
	1432
9D-4439	1328
9F-0836	994
	996
9F-2978	120
	886
	888
	890
	1274
	1354
	1358
9F-3691	695
9F-5599	484
	488
	495
9F-5644	499
9F-6304	120
9F-6445	148
	149
	1216
	1218
	1221
	1222
	1225
	1226
	1228
	1234
	1280
	1282
	1334
	1456
	1460
9F-6604	1090
	1094
9F-6641	1040
9F-6656	1468
9F-7283	603
	609
9F-7378	1075
9F-8999	638
9G-0003	329
	336
	345
	353
	361
	369
	476
	480
9G-0004	329
	336
	345
	353
	361
	369
	476
	480
9G-0142	1376
9G-0150	184
	186
	188
	190
9G-0162	942
	948
	957
9G-0371	216
	222
9G-0398	1264
9G-0772	228
	230
	232
9G-1919	631
9G-1935	684
	686
9G-1950	1202
	1286
9G-2398	750
	751
	752
	756
	757
	758
	759
	760
	761
9G-2401	746
	748
	754
9G-2991	848
	850
9G-3464	598
9G-4101	484
	488
9G-4360	506
	508
9G-4524	1100
9G-4865	709
9G-4872	1
	783
	784
	786
	788
	790
	805
	806
	807
	808
	809
	810
	811
	812
	813
	814
	815
	816
	817
	818
	820
9G-5127	603
	609
	614
	618
	622
	1102
9G-5209	852
	854
	856
9G-5211	852
	854
	856
9G-5212	852
	854
	856
9G-5213	852
	854
	856
9G-5742	1234
9G-6094	942
	948
	956
9G-6242	942
	948
9G-6655	410
	411
9G-6770	472
	495
9G-6935	943
	948
	957
9G-6936	943
	948
	957
9G-7516	768
	770
	772
	774
	776
	778
	780
9G-7641	▶503
	522
	526
9G-7960	708
9G-8103	708
9G-8253	1089
9G-8451	506
	508
	512
	516
9G-8615	536
9G-8661	338
	346
	352
	360
	368
	1082
9G-8909	329
	330
	338
	345
	353
	361
	369
9G-9032	1252
	1256
	1260
	1308
	1312
	1316
	1320
9G-9151	1264
	1266
9G-9288	▶896
9G-9325	▶689
9G-9487	506
	508
	509
	512
	516
9H-1031	34
	36
9H-3360	848
	850
9H-3757	484
	488
	494
9H-6454	998
9H-6687	180
9J-0791	1027
9J-1302	1026
9J-1716	1058
	1059
9J-1722	1058

▶ PRIMARY REFERENCE

PART NUMBER INDEX

Part	Page
	1059
9J-1979	998
9J-1999	1026
9J-2365	1064
	1103
	1130
	1159
	1160
	1162
	1164
	1166
	1168
	1170
	1172
9J-4523	1126
9J-4772	1038
	1039
9J-4782	1090
	1092
	1094
	1096
	1098
	1104
9J-4800	1039
9J-5498	1027
9J-5499	1027
9J-5753	1026
9J-5754	1026
9J-5756	1031
9J-5942	1114
9J-6001	1114
9J-6006	1065
	1066
	►1114
9J-6061	►1106
	1130
9J-6062	1106
	1107
9J-6063	1106
9J-6067	678
	680
	682
	1152
	1154
9J-6069	1142
9J-6070	1142
9J-6071	1142
9J-6073	1065
	1066
	1067
	1068
	►1142
	►1143
9J-6491	1031
9J-6549	912
	914
	916
	918
	920
	922
9J-6556	912
	914
	916
	918
9J-6662	1064

Part	Page
	1130
9J-6689	1090
	1094
	1096
	1098
9J-6691	1090
	1092
	1094
	1096
	1098
9J-8714	1038
	1039
9J-9055	1090
	1092
	1094
	1096
	1098
9K-3050	678
	680
	682
9K-6034	1112
9L-1775	894
9L-5125	1100
9L-5312	180
9L-5854	34
9L-6645	326
9L-6770	320
	322
9L-6776	320
	322
9L-7469	1372
	1374
9L-7712	105
9L-8781	1250
9L-9068	652
	878
9L-9132	120
	156
	268
	894
9M-0164	1410
	1414
9M-1503	630
9M-1869	202
	203
9M-1974	26
	27
	192
	200
	210
	254
	264
	270
	272
	274
	276
	278
	280
	282
	284
	291
	292
	379
	500
	530

Part	Page
	540
	542
	544
	637
	654
	656
	658
	1018
	1148
	1198
9M-1986	1069
9M-1997	1076
9M-2074	644
9M-2076	644
9M-2200	991
9M-2209	991
9M-2744	598
9M-2904	116
	968
	1104
9M-3695	196
9M-3835	310
	695
	700
	708
	736
9M-3838	310
	700
	708
	709
9M-4007	642
9M-4136	200
9M-4225	90
9M-4313	666
	668
9M-4355	630
9M-4370	636
9M-5590	180
9M-5731	854
	856
9M-5732	602
	608
	614
	618
	622
9M-5733	798
	800
	1344
	1348
9M-5884	1234
9M-5894	558
	562
	566
	570
	574
	578
	582
	586
	590
	594
	772
	774
	780
9M-6527	172
	174

Part	Page
	176
9M-6590	1075
9M-6803	1362
9M-7129	234
9M-7394	896
9M-7606	484
	488
	494
9M-7609	484
	488
	494
9M-7959	398
	402
9M-7961	184
	186
	188
	190
9M-8406	246
	1308
	1312
	1316
	1321
9M-9647	536
	603
	609
	615
	619
	623
	628
9N-0869	234
	242
	244
	376
	377
	378
	379
	380
9N-0942	320
	322
9N-0943	320
	322
9N-1995	768
	770
	772
	774
	776
	778
	780
	1235
	1428
	1432
	1468
9N-2038	212
	215
9N-3388	320
9N-3645	143
	144
9N-3666	143
	144
	184
	186
	188
	190
9N-3668	143
	144

► PRIMARY REFERENCE

PART NUMBER INDEX

Part	Page
9P-0575	1234
9P-1444	1354
	1358
9P-1508	1069
9P-1535	1327
9P-1536	1327
9P-1896	►1327
	1364
9P-2262	1334
9P-2704	818
	820
9P-2749	976
9P-2750	976
9P-2870	737
9P-3041	662
	1044
9P-3066	694
	736
	943
	948
	958
9P-3555	558
	562
	566
	570
	574
	578
	582
	586
	590
	594
9P-3657	558
	562
	566
	570
	574
	578
	582
	586
	590
	594
9P-3697	1038
	1112
9P-3801	558
	562
	566
	570
	574
	578
	582
	586
	590
	594
9P-4057	644
9P-4898	1334
9P-6571	1355
	1358
9P-6572	1358
9P-6911	746
	748
9P-7121	308
	312
9P-7361	1038
	1112
9P-7452	1089
9P-7453	1089
9P-7523	1089
9P-7526	1089
9P-7728	►1089
9P-7859	1438
	1439
	1440
	1441
	1449
	1450
9P-7860	1438
	1439
	1440
	1441
	1449
	1450
9P-8663	694
	736
9P-9150	652
	878
9P-9282	1069
9P-9388	1326
9P-9548	694
	695
	736
9P-9549	694
	695
	736
9P-9550	694
	695
	736
9P-9692	942
	948
	957
9P-9693	942
	948
	957
9P-9694	943
	948
	957
9P-9726	1089
9Q-3673	316
	►318
9R-2078	328
9R-2152	943
	948
	959
9R-4282	948
9R-6776	1090
	1092
	1094
	1096
	1098
9S-1018	650
	877
9S-1303	1108
	1112
	1148
9S-1307	1101
9S-1315	12
	16
	149
9S-1343	631
9S-1350	536
9S-1354	1082
9S-1366	158
	162
	166
	848
	850
9S-1367	598
9S-1803	246
	248
	250
9S-2009	320
	322
9S-2013	320
	322
9S-2075	698
9S-2302	320
	322
9S-2390	320
	322
9S-2437	1234
9S-2544	320
	322
	484
	488
	494
9S-2792	664
9S-3581	1075
	1076
9S-3582	1075
	1076
9S-4167	252
	254
	264
	292
9S-4180	294
	296
	297
	298
	300
	302
	306
	1020
	1031
	1034
	1038
	1039
9S-4181	96
	602
	608
	614
	618
	622
9S-4182	264
	998
9S-4183	96
9S-4185	21
	22
	74
	152
	558
	562
	566
	570
	574
	578
	582
	586
	590
	594
	772
	774
	780
	949
	1020
9S-4190	24
	40
	74
	100
	101
	550
	674
9S-4191	142
	152
	264
	536
	540
	542
	544
	552
	554
	556
	636
	642
	646
	654
	656
	658
	944
	949
	956
	1018
	1020
	1022
	1034
	1058
	1059
9S-4372	646
9S-6130	536
	956
9S-6465	852
	854
	856
9S-6558	195
9S-7710	536
9S-7949	1174
9S-7950	1174
9S-8001	294
	296
	297
	298
	300
	302
	1024
	1038
	1059
	1144
9S-8002	252
	254
	292
	294

► PRIMARY REFERENCE

PART NUMBER INDEX

Part	Page
	296
	297
	298
	300
	302
	306
	759
	760
	761
	1020
	1034
9S-8003	294
	296
	297
	298
	1144
9S-8004	48
	50
	52
	54
	234
	242
	244
	264
	294
	296
	297
	298
	300
	302
	306
	1017
	1020
	1024
	1026
	1027
	1031
	1034
	1059
	1086
	1144
9S-8005	1020
	1031
	1144
	1146
9S-8006	48
	50
	52
	54
	848
	850
	1069
9S-8007	294
	296
	297
	298
	300
	302
	306
	654
	656
	658
	1018
9S-8008	552
	554
	556
	673
	674
	1069
9S-8010	554
	556
9S-8230	700
	702
	704
9S-8752	24
	48
	50
	52
	54
	82
	86
	92
	96
	118
	120
	156
	169
	170
	171
	210
	264
	550
	894
	998
9S-8889	1076
9S-9334	552
	554
	556
9T-0085	926
	928
	930
9T-0714	998
9T-1080	▶994
	1102
9T-1181	902
9T-1182	▶1026
9T-2865	898
	900
9T-2868	898
	900
9T-2869	▶898
	▶900
	1000
	1002
	1006
	1010
	1012
9T-3493	924
9T-3746	1026
9T-3747	1026
9T-4318	▶1040
9T-4447	902
9T-4733	1041
	1042
9T-5041	882
9T-5044	883
9T-5048	882
9T-5052	883
9T-5058	883
9T-5072	882
9T-5080	883
9T-5086	882
9T-5088	883
9T-5090	882
9T-5095	883
9T-5099	882
9T-5102	883
9T-5109	883
9T-5110	882
9T-5114	883
9T-5336	▶883
	994
	996
9T-5337	994
	996
9T-5338	994
	996
9T-5483	1027
9T-5769	1027
	▶1031
9T-7059	898
	900
9T-7490	998
9T-7567	998
9T-7568	998
9T-7569	998
9T-7570	998
9T-7571	998
9T-7572	998
9T-7578	998
9T-7883	1020
	1034
	▶1039
9T-7884	▶1020
9T-8206	1032
	1036
9T-8207	1032
	1036
9T-8208	1032
	1036
9T-8210	1032
	1036
9T-8213	892
	▶1032
9T-9199	902
9T-9200	906
	910
9T-9201	904
	908
9T-9202	▶902
	1130
9T-9203	897
	▶904
9T-9204	897
	▶906
9T-9682	904
	906
	908
	910
9T-9840	▶634
	990
9U-8154	1074
9U-8215	▶1149
	1159
	1160
9U-8216	▶1150
	1162
	1164
9U-8402	1126
9U-8404	1090
	1092
	1094
	1096
	1098
	1105
9U-8405	1126
9U-8537	792
	793
	794
9U-9014	1421
	1422
9U-9015	420
	437
9U-9046	1428
	1432
9U-9048	1428
	1432
9U-9049	1456
	1460
9U-9050	1456
	1460
9U-9285	552
9U-9337	1108
9U-9487	978
	982
9U-9488	978
	982
9U-9552	▶1336
9U-9557	132
9U-9622	1128
9U-9623	1104
	1116
	1120
9U-9634	▶1366
9U-9635	1366
9U-9638	1366
9U-9956	1271
	1364
	1365
9U-9957	1271
	1364
	1365
9V-0999	602
	608
	614
	618
	622
	976
9V-2500	481
9V-2818	152
	154
9V-3043	1404
9V-7451	1305
9V-7943	1404
9V-8427	1061
	1063
	1186
	1188
	1190
9W-0352	708

▶ PRIMARY REFERENCE

PART NUMBER INDEX

Part	Page
9W-0498	943
	948
	958
9W-0647	262
9W-0648	310
	706
	708
	709
9W-0742	329
	338
	346
	354
	362
	370
	▶413
	476
	481
9W-0844	1202
	1206
	1286
	1290
9W-0852	1202
	1206
	1211
	1264
	1266
	1280
	1282
	1286
	1290
	1294
9W-0875	976
9W-0992	1075
9W-1258	1183
9W-1261	1183
9W-1461	497
9W-1599	247
	248
	250
9W-1694	798
	800
9W-1867	836
	838
9W-1869	836
	837
9W-1870	837
9W-1991	330
	940
	1105
9W-2251	1154
	▶1183
9W-2252	944
	948
9W-2255	678
	680
	682
9W-2380	768
	770
	772
	774
	776
	778
	780
9W-2381	1110
9W-2409	1152
9W-2718	736
9W-2770	736
9W-2877	978
	982
	1103
9W-2881	978
	982
9W-2883	978
	982
9W-2886	972
9W-2890	978
9W-2893	972
	978
	982
9W-2894	972
	978
	982
9W-2896	978
	982
9W-2938	329
	338
	345
	353
	361
	369
	476
	481
9W-2939	1159
	1160
	1162
	1164
	1166
	1168
	1170
	1172
9W-3073	1305
9W-3215	972
	978
	982
	1103
9W-3218	972
9W-3219	972
9W-3244	▶972
	1065
	1066
	1067
	1068
9W-3459	338
9W-3671	798
	800
9W-4023	1146
9W-4162	598
9W-4163	598
9W-4168	▶837
9W-4170	▶837
9W-4194	783
	784
	786
	788
	790
9W-4201	942
	948
	956
	964
9W-4221	698
9W-4233	698
9W-4361	426
	427
	428
	429
	430
	1103
9W-4364	942
	956
	1102
9W-4488	764
	765
9W-4489	815
	816
	817
	818
	820
9W-4580	943
	948
	957
9W-4581	943
	948
	957
9W-4888	1000
	1002
	1006
	1010
	1012
9W-4904	692
9W-5065	▶720
9W-5265	792
9W-5266	792
9W-5567	662
	1044
9W-5568	662
	1044
9W-5575	768
	770
	772
	774
	776
	778
	780
9W-5652	1150
	▶1177
9W-5653	1150
	▶1178
9W-5721	792
9W-5722	792
9W-5768	631
9W-5776	▶838
	839
9W-6118	1152
	1154
	1156
9W-6343	1092
9W-6371	1090
	1092
	1094
	1096
	1098
	1105
9W-6521	698
9W-6522	698
9W-6524	698
9W-6525	698
9W-6608	1175
	1176
9W-6609	1175
9W-6615	1176
9W-6656	1177
9W-6657	1177
	1178
9W-6658	1178
9W-6854	792
9W-6958	706
	708
9W-6991	630
	642
9W-7007	726
9W-7138	964
9W-7140	965
9W-7141	965
9W-7310	▶1364
9W-7311	1220
	▶1365
9W-7312	1364
9W-7313	1363
	1365
9W-8100	216
	222
9W-8277	798
	800
9W-8365	1191
	1192
	1193
9W-8394	406
	408
9W-8558	1118
	1122
9W-8576	1104
9W-8666	328
9W-8751	972
9W-8878	806
	809
	811
	814
9W-8941	968
9W-9027	1354
	1358
9W-9132	558
	562
	566
	570
	574
	578
	582
	586
	590
	594
9W-9133	558
	562
	566
	570
	574
	578
	582
	586
	590
	594

▶ PRIMARY REFERENCE

PART NUMBER INDEX

Part	Page
9W-9134	558
	562
	566
	570
	574
	578
	582
	586
	590
	594
9W-9135	558
	562
	566
	570
	574
	578
	582
	586
	590
	594
9W-9136	558
	562
	566
	570
	574
	578
	582
	586
	590
	594
9W-9163	1131
	1132
9W-9300	792
	793
	794
9W-9499	805
	806
	807
	808
	809
	810
	811
	812
	813
	814
9W-9536	▶772
	839
9W-9540	768
	770
	772
9W-9546	822
	824
	826
9W-9551	767
	768
	770
	772
9W-9577	700
9W-9734	▶783
	839
9W-9830	662
	1044
9W-9856	631
9W-9978	216
	222
9X-0199	522
	527
9X-0261	236
	237
	238
9X-0262	270
	272
	274
	276
	278
	280
	282
	284
9X-0263	48
	50
	52
	54
	202
	203
9X-0358	1252
	1256
	1260
9X-0438	1350
	1352
9X-1138	1456
	1460
9X-1386	345
	443
	470
	480
9X-1484	1050
9X-1813	48
	50
	52
	158
	162
	166
	264
	445
	453
	454
	455
	456
	457
	458
	459
	460
	462
	463
	464
	465
	466
	467
	468
	469
	498
9X-1878	1468
9X-2038	154
	1334
	1376
	1377
	1378
9X-2043	866
9X-2045	1376
	1377
	1378
9X-2092	1394
9X-2185	1203
9X-2205	308
	313
9X-2488	406
	408
	1206
	1210
	1286
	1290
	1294
9X-2498	395
9X-2500	320
	322
9X-2508	1334
9X-2546	858
9X-3402	459
9X-3439	1264
9X-3451	1264
9X-3452	1264
	1266
9X-3463	415
	416
	417
	418
	419
9X-3994	1234
9X-4292	1264
9X-4587	776
	778
9X-4588	768
	770
	772
	774
	776
	778
	780
9X-5535	1050
9X-5592	▶447
	852
	854
	860
9X-5727	1466
9X-6016	1252
	1329
	1355
9X-6076	2
9X-6258	508
	513
	517
	520
9X-6268	1438
	1440
	1447
	1449
9X-6281	852
	854
	856
9X-6333	1468
9X-6458	24
	130
	156
	159
	163
	167
	210
	264
	550
	894
9X-6551	497
9X-6581	124
9X-6615	860
	862
	864
9X-6772	74
	124
	143
	144
	248
	250
	328
	336
	337
	344
	352
	360
	368
	410
	411
	412
	420
	422
	424
	425
	435
	436
	437
	438
	439
	476
	481
	522
	526
	650
	798
	844
	858
	860
	862
	864
	866
	886
	888
	890
	1105
	1252
	1253
	1256
	1260
	1308
	1312
	1316
	1426
9X-7371	82
	86
	169
	170
	171
9X-7373	1266

▶ PRIMARY REFERENCE

PART NUMBER INDEX

Part	Page
9X-7378	1253
	1256
	1260
	1308
	1312
	1316
	1321
9X-7380	1252
	1253
	1256
	1260
	1308
	1312
	1316
	1321
9X-7381	1252
	1257
	1261
	1308
	1312
	1316
	1321
9X-7382	1252
	1256
	1260
	1308
	1312
	1316
	1321
9X-7383	1252
	1256
	1260
	1308
	1312
	1316
	1321
9X-7385	1238
	1239
	1241
	1246
	1253
	1256
	1260
	1308
	1312
	1316
	1321
9X-7405	900
9X-7406	908
	910
9X-7409	1053
	1056
9X-7487	1
9X-7500	750
	752
	756
	757
	759
	760
9X-7674	602
	608
9X-7680	260
	300
	306
9X-7681	286
	287
	288
	289
	290
9X-7734	268
9X-7781	329
	337
	345
	353
	▶497
9X-7803	318
	▶320
9X-8071	497
9X-8256	796
	860
	862
	864
	866
	870
	872
	1280
	1282
9X-8464	1350
9X-8486	152
9X-8498	1202
	1206
	1210
	1286
	1290
	1294
9X-8600	216
	218
	308
	313
9X-8703	2
9X-8793	1194
	1195
9X-8874	598
9X-8880	536
9X-8881	598
9X-8883	598
9X-8889	694
	736
9X-8902	860
	862
	864
	876
9X-8918	1298
	1302
9X-9013	1203
	1206
	1287
	1291
9X-9730	2
	328
	336
	344
	354
	362
	370
	476
	480
9X-9896	1350
	1352
9Y-1022	143
9Y-1800	140
9Y-3368	34
	36
9Y-4294	1468
9Y-6089	23
9Y-9236	184
	186
	188
	190
9Y-9497	98
	99
9Y-9929	82
	86

0

Part	Page
001-6842	180
003-9514	184
	186
	188
	190
	1324
004-6683	184
	186
	188
	190
005-7889	1324
008-2103	1086
008-3214	634
008-9792	1307
009-2062	883
013-8289	1196
027-3924	1404
030-7571	1082
	1394
030-7732	1214
030-7765	1324
030-7950	1086
030-7962	143
	144
030-8194	82
	86
030-8535	1280
	1282
030-8538	558
	562
	566
	570
	574
	578
	582
	586
	590
	594
030-9612	320
	322
031-0213	684
031-0214	1362
031-1119	183
	184
	188
031-2701	244
032-0676	598
032-1013	143
	144
032-1267	82
	86
033-0512	688
033-5853	260
033-6027	48
	50
	52
	54
	260
033-6028	1050
033-6033	124
	126
	264
	270
	272
	274
	276
	278
	280
	282
	284
	314
	463
033-6034	530
033-6036	654
	656
	658
	1018
033-6039	260
	1046
	1050
033-6042	260
033-6783	248
	250
	262
033-8248	964
034-3557	536
034-4202	398
	402
036-9821	484
	488
	494
036-9823	484
	488
	494
039-6360	310
045-4065	472
	485
	489
	495
061-7278	330
	337
	345
	354
	362
	370
	476
	480
061-7540	120
	550
061-8561	48
	50
	52
	54

▶ PRIMARY REFERENCE

PART NUMBER INDEX

Part	Page
061-8803	1372
	1374
061-9457	994
	996
064-7310	882
064-7311	882
066-4133	994
	996
067-3161	815
	816
	817
	818
	820
068-4209	506
	508
	512
	516
	1257
	1261
068-5893	728
082-2817	3
	1402
084-4111	1444
	1446
091-0081	262
091-8792	1202
	1206
	1210
	1286
	1290
	1294
091-9035	944
	948
	959
	1082
093-0386	1342
095-0843	1382
	1384
095-0878	1298
	1302
	1372
	1374
095-1314	1374
095-1751	1036
095-7950	631
096-5962	852
	854
	856
096-6166	328
	344
	352
	360
	368
098-5687	264
1	
100-3131	1149
100-3132	1149
100-3133	1149
100-3134	1149
100-3224	1299
	1302
100-4083	671
100-4336	124
100-4417	7
	9
	11
	►500
100-4645	998
100-5179	1298
	1302
100-5568	1350
	1352
100-5895	►1330
	1350
100-6531	320
	322
100-6532	320
	322
100-6889	110
100-7401	205
100-9965	926
	928
	930
101-0003	1408
	1418
101-0523	38
101-0852	392
	393
	394
101-1759	►1239
	►1240
	1242
101-2749	169
	170
	171
101-2850	1468
101-2865	1394
101-2867	1362
101-3374	20
101-4194	1408
	1418
101-4195	1408
	1418
101-6713	80
101-7771	►886
	►888
	►890
101-7788	110
101-8240	406
	408
101-8296	1252
	1256
	1308
	1312
	1316
101-8789	1252
	1256
	1308
	1312
	1316
101-8909	216
	218
101-8917	38
101-9397	1234
101-9398	1234
102-0288	1307
102-0347	1239
102-0685	►395
	1220
102-2240	158
	162
	166
	264
102-2913	1468
102-3001	►1454
	1456
	1460
102-3019	1220
	►1428
	►1432
102-3020	1220
	►1456
	►1460
102-3456	1220
	►1421
102-3679	886
	888
	890
102-3680	886
	888
	890
102-4353	4
	►782
102-4365	►207
102-4366	►208
102-4394	4
	►424
	►425
102-4395	►434
	►435
	►436
102-4399	►1216
	►1218
102-6317	1410
	1414
102-7412	848
102-7494	44
	45
	46
102-7535	264
	►314
102-8800	1257
102-8801	858
	1257
102-8802	74
	134
	136
	138
	152
	154
	315
	328
	329
	336
	344
	345
	352
	353
	360
	361
	368
	369
	416
	417
	443
	444
	466
	467
	474
	480
	498
	522
	526
	658
	844
	1051
	1052
	1053
	1056
	1202
	1203
	1206
	1211
	1256
	1260
	1264
	1266
	1286
	1287
	1290
	1291
	1294
	1308
	1312
	1316
	1320
	1410
	1414
102-8803	74
	152
	154
	158
	162
	166
	264
	414
	446
	447
	448
	449
	450
	451
	452
	463
	468
	469
	470
	888
	890
	1110
	1257
	1280
	1282
	1428
	1432
102-8804	445
	880

► PRIMARY REFERENCE

PART NUMBER INDEX

Part	Page
	1047
	1048
	1049
	1054
	1320
	1428
	1432
102-8805	504
	1202
	1206
	1211
	1269
	1280
	1282
	1286
	1290
	1294
	1330
	1331
	1332
	1452
	1454
	1456
	1460
102-8807	352
	360
	368
	444
	1203
	1256
	1287
	1291
102-8808	48
	50
	52
	453
	454
	464
	1257
102-8809	352
	360
	368
	508
	512
	516
	1428
102-8810	1202
	1206
	1286
	1290
	1428
	1432
102-8811	522
102-8813	48
	50
	52
	453
	454
	456
	460
	464
	465
102-8814	1428
	1432
102-8815	1202

Part	Page
	1286
	1428
	1432
102-9062	1104
	1186
	1187
	1188
	1189
	1190
	1191
102-9073	1104
	1186
	1187
	1188
	1189
	1190
	1191
102-9235	522
	526
102-9946	1308
	1312
	1316
	1320
103-4722	526
103-5526	522
	526
	▶1269
103-6091	48
	50
	52
103-6092	270
	272
	274
	276
	278
	280
	▶454
103-6093	202
	236
	237
	▶455
103-6100	1252
	1253
	1256
	1260
	1308
	1312
	1316
	1320
103-6262	860
	862
	864
103-6283	▶216
103-8120	1110
103-9527	1252
	1257
	1261
	▶1264
	▶1266
104-2079	228
104-2091	1282
	1358
104-3947	1052
104-5771	700
	702

Part	Page
	704
104-5773	700
	702
	704
104-5970	671
104-6729	540
	542
	544
104-6730	540
	542
	544
105-0196	169
	▶172
105-1515	228
	230
	232
105-2508	254
	291
	292
105-3372	850
105-3380	1334
105-3480	1350
	1352
105-3763	320
	322
105-3764	320
	322
105-3785	172
	174
105-3790	172
	174
105-3800	41
	▶42
	45
105-4169	926
	928
	930
105-4172	926
	928
	930
105-6122	380
	▶387
105-9149	522
	526
105-9152	134
	136
	138
106-0466	▶848
	▶850
106-0468	848
	850
106-0469	848
	850
106-0470	848
	850
106-0471	848
	850
106-0472	848
	850
106-0476	848
	850
106-0478	848
106-0735	270
	272
	274

Part	Page
	276
	278
	280
	282
	284
	▶468
106-1792	48
	50
	52
	54
106-2721	1264
106-3027	234
	242
106-3968	194
	195
	▶196
106-3969	196
106-3973	196
106-4150	536
	▶548
	646
106-4437	▶448
	862
106-4454	1350
	1352
106-4572	178
106-5122	▶1241
	1248
106-5472	854
	856
106-5823	406
	408
106-7098	642
106-7099	644
106-7408	1469
106-7483	886
	888
	▶1016
106-7687	320
	322
106-7689	320
	322
106-7690	320
	322
106-8186	678
	680
	682
106-8187	678
	680
	682
106-8484	▶328
	▶336
	▶344
106-8485	328
	336
	344
	352
	360
	368
106-8489	329
	337
	344
106-8490	329
	337
	344

▶ PRIMARY REFERENCE

PART NUMBER INDEX

Part	Page
106-8491	328
	336
	344
	352
	360
	368
106-8964	▶415
	427
	428
106-9188	1309
	1313
	1317
106-9408	200
106-9488	26
	27
106-9586	96
106-9648	884
	▶1058
	▶1059
107-0266	1280
	1282
107-0576	904
	906
	908
	910
107-0677	294
	296
	297
	298
	300
	302
	306
	▶1050
107-1954	▶105
	110
107-1964	1350
	1352
107-2066	1054
107-2114	1252
	1256
	1308
	1312
	1316
107-3202	268
107-3500	▶1179
107-3510	1179
107-3515	1179
107-3516	1179
107-3947	806
	807
	808
	809
	811
	812
	813
	814
107-4057	806
	807
	808
	809
	811
	812
	813
	814
107-4393	1257
	1261
107-4394	1257
	1261
107-4399	1257
	1261
107-4888	806
	809
	811
	814
107-5851	415
	416
	417
107-5852	415
	416
	417
107-5853	415
	416
	417
107-5854	415
107-5919	207
	208
107-6761	530
107-8106	204
107-8107	204
107-8611	672
107-9326	286
	287
	288
	289
	290
107-9570	48
	50
	52
	54
107-9613	1
	▶811
107-9614	1
	▶806
107-9616	806
	807
	808
	809
	811
	812
	813
	▶784
107-9620	784
	788
107-9621	784
108-0219	48
	50
	52
	54
108-1274	156
	894
108-1434	130
	210
108-1537	152
	1252
	1257
	1261
108-1553	6
	8
	10
	▶20
108-1874	7
	9
	11
	▶110
108-1887	▶45
	▶46
	48
	50
	52
	54
108-2735	630
108-2736	631
108-3612	204
	205
108-3956	26
	27
108-4082	1388
	1389
	1390
	1391
	1392
	1393
	▶1408
108-4086	1298
	1303
108-4087	1299
	1303
108-4103	1299
	1303
108-4429	673
108-4430	673
	674
108-4431	673
108-4432	673
108-4433	673
	674
108-4434	652
	878
108-4582	▶1298
	1408
108-5461	▶1034
	1082
108-5603	105
108-5803	48
	50
	52
108-5806	48
	50
	52
	54
108-6043	598
108-6044	598
108-6278	20
108-7090	7
	9
	10
	▶286
	▶287
	▶288
	▶289
108-7930	172
	174
	176
108-8105	159
	163
	167
108-8421	▶1344
	1372
	1374
108-8423	1344
108-8424	1344
108-8425	1372
108-8426	1374
108-9432	130
109-0063	848
	850
109-0072	156
	894
109-0073	156
	192
	894
109-0074	158
	162
	166
109-0075	158
	162
	166
109-0076	120
	158
	162
	166
	603
	609
	614
	618
	622
109-0077	145
	163
	167
109-0079	192
109-0400	6
	8
	10
	▶379
109-0401	7
	9
	11
	▶530
109-0628	1108
	1338
	1340
	1342
109-1364	310
109-1633	1253
	1256
	1260
	1308
	1312
	1316
	1320
109-1634	1253
	1256
	1260
	1308
	1312
	1316

▶ PRIMARY REFERENCE

PART NUMBER INDEX

Part	Page
	1320
109-1645	328
	336
	337
	344
	346
	352
	354
	360
	362
	368
	370
	522
	526
109-2377	2
	▶397
109-2811	158
	162
	166
109-2823	7
	8
	10
	▶98
109-3134	▶1192
109-3206	260
109-3875	1252
	1257
	1261
109-5745	352
	360
	368
109-5746	352
	360
	368
109-5747	522
109-5748	522
109-5749	▶352
	▶360
	▶368
109-5750	▶522
109-6550	184
109-7210	4
	▶722
109-8217	156
	894
109-8774	1252
	1256
	1260
109-9010	6
	8
	10
	▶38
109-9038	▶1149
109-9039	▶1149
109-9685	260
109-9758	116
109-9908	▶708
110-0040	210
110-2220	34
110-2619	▶641
110-2627	641
	▶649
110-2628	649
110-2637	▶531
	▶532
	▶533
	▶534
110-2655	▶558
	▶562
110-2656	▶566
	▶570
110-2662	558
	562
	566
	570
	574
	578
	582
	586
	590
	594
110-2663	558
	562
	566
	570
	574
	578
	582
	586
	590
	594
110-2664	558
	562
	566
	570
	574
	578
110-2665	558
	562
	566
	570
	574
	578
	582
	586
	590
	594
110-2670	559
	563
	567
	571
	574
	578
	582
	586
	590
	594
110-2671	558
	562
	566
	570
	574
	578
	582
	586
	590
	594
110-2673	566
110-2674	559
	563
	567
	571
	574
	578
	582
	586
	590
	594
110-2767	▶642
	644
110-2768	▶644
	646
110-2769	▶646
110-2780	1
	▶574
	▶578
110-3020	6
	▶156
110-4506	1252
	1256
	1261
110-4724	897
	▶1107
110-4727	978
	982
110-4729	1107
110-5188	716
	728
110-5358	695
110-5435	722
110-5436	722
110-5437	722
110-5438	722
110-5439	722
110-5733	694
110-5918	943
	948
	959
110-5952	706
110-5975	706
110-5980	132
110-5981	248
	250
	262
110-6030	706
110-6031	706
110-6032	4
	▶1465
110-6109	1280
	1282
110-6393	1200
	1201
110-7357	1338
	1340
	1342
110-7621	1338
	1340
	1342
110-7880	844
110-7890	1280
	1282
110-7935	1465
110-8009	786
110-8010	782
	▶786
110-8213	520
110-8318	132
110-8319	132
110-8454	694
110-8455	695
110-8485	310
110-8826	132
110-8827	132
110-9243	631
110-9245	631
110-9246	631
110-9248	631
110-9251	631
110-9255	631
110-9258	630
110-9262	630
110-9264	630
110-9269	630
110-9272	630
110-9274	630
110-9276	630
110-9278	630
110-9280	630
110-9281	631
110-9282	630
110-9283	630
110-9284	630
110-9285	631
110-9286	631
110-9287	631
110-9288	631
110-9289	631
110-9291	536
110-9292	▶598
	648
110-9293	▶536
	648
110-9295	▶630
	648
110-9296	▶648
110-9298	536
110-9299	536
110-9300	536
110-9301	598
110-9302	598
110-9303	598
110-9304	598
110-9305	598
110-9306	598
110-9307	598
110-9309	598
110-9311	641
111-0343	672
111-0611	706
	708
111-0613	310
	706
	709
111-0625	▶1102
111-0877	1202
	1286
111-2106	1090
	1092
	1094
	1096
	1098
111-2721	172
	174

▶ PRIMARY REFERENCE

PART NUMBER INDEX

Part	Page
	176
111-3199	627
	874
111-3203	660
	1052
	1053
	1056
111-3230	1338
	1340
	1342
111-3231	1338
	1340
	1342
111-3247	520
111-4402	330
	337
	345
	354
	362
	370
111-4639	158
	162
111-4640	158
	162
111-4919	637
111-7090	1334
	1338
	1340
111-7091	1334
	1338
	1340
111-7259	1252
	1257
	1308
	1312
	1316
111-7916	▶255
	286
111-8314	426
	427
	428
	429
	430
	431
	432
111-8411	389
	390
111-8547	1220
	▶1234
	1237
111-8549	1216
	▶1220
	1224
	1228
	1230
111-8863	294
	296
	297
	298
111-8919	630
111-8920	631
111-9289	406
	408
111-9827	406
	408
111-9862	494
111-9864	494
111-9866	495
112-0817	▶1468
112-1289	598
112-1577	156
	894
112-1579	169
	170
	171
112-1580	169
	170
	171
112-2014	700
112-2895	▶1220
112-3258	156
	894
112-3837	976
112-4398	▶1337
112-4400	1337
112-4509	630
112-4511	631
112-4512	536
112-4577	1372
	1374
112-5282	158
	162
	166
112-7317	598
112-7686	852
	854
	856
112-7750	204
	205
112-7751	204
	205
112-9217	80
112-9265	264
113-0318	▶1180
113-0338	1180
113-0520	148
	149
113-0521	148
	149
113-0899	1372
	1374
113-1921	268
113-4316	328
	337
	344
	352
	360
	368
113-4323	96
113-4536	1156
113-8276	▶540
	▶542
	▶544
	648
113-8866	536
113-9270	540
	▶1018
114-0325	598
114-0917	210
114-0966	28
114-2368	427
	429
114-2386	▶1354
	▶1358
114-2388	1329
	1354
114-2389	1329
	1354
114-2401	▶322
	324
	326
114-3107	▶439
	▶440
114-3824	550
114-3825	550
114-3926	650
	877
114-4427	40
114-4652	631
114-4653	630
114-4654	631
114-4655	536
114-4698	152
	154
114-5333	1253
	1256
	1260
	1308
	1312
	1316
	1320
114-5508	1329
	1355
114-5544	▶736
114-5565	▶700
	▶702
	▶704
114-5633	▶308
114-5638	▶726
114-5639	726
114-5985	1280
	1282
114-5992	▶427
	434
	435
	437
	439
114-6005	▶442
	1133
	1134
	1135
114-6006	▶437
	▶438
	1065
	1066
114-6009	▶420
	▶422
114-6471	1220
	▶1280
	▶1282
114-6474	▶1350
	▶1352
114-6476	▶1376
	▶1377
	▶1378
114-6664	▶526
114-8681	27
114-8684	26
	27
114-8998	▶474
114-9002	▶262
114-9363	426
	428
114-9365	424
	425
	439
	440
115-0496	▶324
	▶326
115-1032	420
	422
115-1250	420
	422
	437
	438
115-1888	424
	439
	440
115-1889	424
	425
	439
115-1911	410
115-2151	318
	324
	326
115-3307	1200
	▶1242
	▶1244
115-3598	255
	256
	257
	258
	259
115-4555	▶410
115-4643	1280
115-6469	379
	380
115-7078	▶942
	▶948
115-7079	▶974
115-7080	▶934
115-7082	892
	▶964
115-7084	884
	▶976
115-7294	▶678
115-7395	678
115-7411	▶852
	▶854
	▶856
115-7412	▶538
115-7413	▶376
115-7414	▶650
115-7641	▶6
115-7645	1242
	1244
	1248
	1313
115-7646	1242
115-8082	1242

▶ PRIMARY REFERENCE

PART NUMBER INDEX

Part	Page
	1244
	1248
115-8086	1242
	1244
	1248
115-8087	1242
	1244
	1248
115-8094	▶998
115-8384	550
115-8454	1350
115-8456	1280
	1282
115-8475	1350
	1352
115-9650	1242
	1244
	1248
116-2030	▶884
116-2482	▶1200
116-2586	▶1133
116-2589	1280
	1282
116-2590	1280
	1282
116-2591	848
	850
116-2592	848
	850
116-3119	1280
	1282
116-3307	308
116-4900	147
	▶150
	1402
116-4948	▶124
	1402
116-5255	▶103
	147
	1402
116-5256	103
116-5288	636
116-5819	264
116-5829	▶476
116-6202	1253
	1257
	1261
	1309
	1313
	1317
	1320
116-6769	▶134
	▶136
	▶138
116-7220	110
116-7221	286
	287
	288
	289
	290
116-7222	255
	256
	257
	258
	259
116-7474	662
	1044
116-7876	603
	609
	614
	618
	622
116-7877	603
	609
	614
	618
	622
116-7880	1350
	1352
116-8658	630
116-9526	▶636
	637
116-9530	636
116-9533	636
116-9692	934
116-9694	934
116-9972	976
116-9973	974
	1138
116-9974	974
	1138
117-0610	494
117-1032	666
	668
117-1034	603
	609
	▶666
117-1158	324
117-1317	398
	402
	708
117-1328	420
	424
	▶428
117-1601	124
117-1620	294
	296
	297
	298
	300
	302
	304
117-1708	▶1002
	▶1004
	1065
	1066
117-1852	1220
	▶1334
117-3006	904
	906
	908
	910
	1064
117-4486	1198
117-4492	1197
	1198
117-4722	636
117-4725	636
117-4990	▶1090
	1133
	1134
117-4995	1090
	1098
117-5676	1449
117-5677	1438
	1440
117-5697	▶1065
117-5698	▶1065
117-5722	▶1066
117-5723	▶1066
117-5724	▶897
117-5725	897
	▶978
	▶982
117-5792	644
117-5794	644
117-5878	998
117-6418	1002
	1004
	1006
	1008
117-7091	▶892
117-7092	603
	609
117-7127	646
117-7423	943
	948
	957
117-7424	944
	948
	957
117-7425	942
	948
117-7607	1397
	▶1410
117-8131	1355
	1358
117-8301	550
117-8312	1252
	1256
	1309
	1313
	1317
117-8315	1220
	▶1324
117-8316	1308
	1312
	1316
	1320
117-8320	1200
	1201
	▶1308
	▶1312
	▶1316
	▶1320
117-8547	678
	680
	682
117-8618	158
	162
	166
117-8619	158
	162
	166
117-8621	6
	▶158
117-8859	852
117-9154	158
	162
	166
117-9512	▶34
	38
117-9650	268
117-9690	322
117-9712	80
117-9758	852
	854
	856
117-9783	852
118-0289	852
118-0609	904
	906
	908
	910
118-0611	904
	906
	908
	910
118-0612	904
	906
	908
	910
118-0639	858
118-2141	1186
	1187
	1188
	1189
	1190
	▶1193
118-2461	▶746
	▶748
	839
118-2462	746
	748
	▶750
118-2486	▶602
	▶608
	▶614
	▶618
	▶622
118-2900	574
	578
118-3624	654
	656
	658
	1018
118-4546	726
118-4547	726
118-4548	726
118-5068	118
118-6330	57
	58
	59
	62
	63
	64
	65
	66
	70
	74

▶ PRIMARY REFERENCE

PART NUMBER INDEX

Part	Page
	75
	76
	152
	154
118-6335	236
	237
	238
	239
	240
118-6365	328
	336
	346
	354
	362
	370
	522
	526
118-6840	150
118-7214	158
	162
	166
118-7226	328
	329
	336
	337
	338
	344
	354
	362
	370
	▶469
118-8015	▶1125
118-8157	270
	272
	274
	276
	278
	280
	282
	284
118-8182	672
118-8475	94
118-9115	94
118-9158	798
	800
119-0585	156
	894
119-0586	156
	894
119-0763	150
	151
119-0764	150
	151
119-0765	150
	151
119-1708	286
	287
	288
	289
	290
119-3481	1242
	1244
	1248
119-4166	60
	61
	67
	68
	72
	▶463
119-4287	150
	151
119-4288	150
	151
119-4289	1200
	1201
	▶1250
119-4290	184
	186
	188
	190
	1250
119-4291	1250
119-4292	1250
119-4295	1250
119-4774	178
119-5115	262
119-5117	248
	250
	262
119-6141	1112
119-6510	736
119-6511	736
119-6516	736
119-6676	▶730
119-6677	730
119-6678	730
119-6679	730
119-6685	700
119-6931	477
	481
119-7015	1116
	1118
	1120
	1122
119-7256	180
119-7257	180
119-7258	180
119-7259	180
119-7307	1112
119-7308	1108
119-7539	694
	736
119-7540	694
	736
119-7541	694
	736
119-7746	700
	702
	704
119-7830	▶1092
	1133
119-7851	700
	702
	704
119-8210	▶1133
119-8455	926
	928
	930
119-9015	26
	27
120-0114	1338
	1340
	1342
120-0158	57
	58
	59
120-5820	886
	888
	890
120-5821	886
	888
	890
120-9750	7
	9
	11
	▶520
121-0145	636
	637
	638
121-0596	520
121-0691	848
	850
121-2725	50
121-2730	1230
	1232
121-4030	627
	▶1051
121-4034	6
	8
	10
	▶268
121-4035	1051
121-5455	200
121-5457	200
121-5459	200
121-5461	200
121-5756	60
121-5767	60
121-6160	1112
121-6198	210
121-6766	264
121-9231	1022
121-9258	1334
121-9259	1334
121-9871	598
122-0097	264
122-0163	105
122-0321	45
	46
122-0322	45
	46
122-0333	598
122-1512	▶860
	▶862
	▶864
	866
122-2738	522
	527
122-3492	976
122-4244	860
122-4268	844
122-4270	844
122-4271	844
122-4426	736
122-4545	1108
122-4575	598
122-4617	▶1369
	1380
	1389
	1392
122-4974	1051
	1052
	1053
	1056
122-5023	158
	162
	166
122-5024	158
	162
	166
122-6037	398
122-6046	844
122-6049	844
122-6133	1108
	1112
	1338
	1340
	1342
122-6824	844
122-6825	844
122-6826	844
122-7372	860
	862
	864
	▶870
122-8026	866
122-8079	695
	736
122-8682	▶628
122-9832	1220
	▶1422
123-0555	264
123-0912	858
123-0932	398
123-0941	398
123-0944	398
123-2923	158
	162
	166
123-3132	1050
123-3283	866
123-3295	860
	862
	864
123-3296	860
	862
	864
123-3474	636
123-3826	860
	862
	864
123-4207	92
123-4731	48
	50
	52
123-5150	134
	136
	138
123-5886	▶57
	▶58

▶ PRIMARY REFERENCE

PART NUMBER INDEX

Part	Page
	►59
123-5888	57
	58
	59
123-5889	57
	58
	59
	62
	63
	64
	65
	66
	75
123-5895	124
123-5898	124
	126
123-6377	860
	862
	864
123-6392	860
	862
	864
123-6446	►858
	860
	862
	864
123-6449	328
	336
	344
	352
	360
	368
123-6666	172
123-6801	246
123-6968	57
	59
	►60
	62
	64
123-7767	1052
123-8157	1410
	1414
123-8180	130
123-8223	1410
123-8266	1410
	1414
123-8329	1264
123-8617	848
	850
123-8686	134
	136
	138
	►494
123-9052	21
	22
123-9128	1410
	1414
123-9131	1410
	1414
123-9144	1410
123-9176	866
123-9773	495
123-9776	495
123-9812	860
	862

Part	Page
	864
124-0077	►937
	►938
	1125
124-0205	1002
	1004
	1006
	1008
124-0206	►1006
	►1008
	1065
	1066
124-0799	844
124-2354	►844
	866
124-2356	538
	►866
124-2375	558
	562
	566
	570
	574
	578
	582
	586
	590
	594
124-2463	220
	222
	224
	226
124-2725	124
	►142
124-2793	934
124-3346	978
	982
124-3347	978
	982
124-3496	1052
	1053
124-3497	142
	►1052
	►1053
124-3702	870
	872
124-3744	886
	890
124-4347	92
124-4456	7
	9
	10
	►102
124-5517	►1276
	1278
124-5518	1276
124-5519	1276
124-5524	1276
124-6329	1410
124-6625	48
	50
	52
	54
124-6626	48
	50
	52

Part	Page
	54
124-6640	234
	242
	244
124-6641	234
124-6838	1334
124-6864	178
124-6867	►178
	181
124-7101	798
	800
124-7113	798
	800
124-7128	1410
	1414
124-7271	654
	656
	658
	1018
124-7609	80
124-7610	654
	656
	658
	1018
124-8490	1266
124-9325	329
	337
	344
	352
	360
	368
	►445
124-9336	234
124-9337	234
124-9630	1221
	►1230
124-9774	1438
	1440
124-9775	1449
125-0254	►180
125-0260	180
125-0370	►1112
125-0473	134
	136
	138
125-0497	1468
125-0582	876
125-0583	860
	862
	864
	►876
125-1173	234
125-1261	1253
	1308
125-1302	477
	480
	506
	508
	512
	516
125-2000	442
125-2001	►429
	►430
	435
	436

Part	Page
	438
	440
	442
125-2730	234
125-3225	270
	►294
125-3268	803
	804
	►812
125-3270	►807
	841
	842
	843
125-3298	870
	876
125-3299	872
125-3420	►228
	►230
	►232
125-3429	234
125-3430	►234
	236
125-3431	6
	8
	10
	►236
	►237
	►238
	►239
	►240
125-3537	►788
	839
	840
	841
	842
	843
125-3688	234
125-4490	522
	526
125-4521	1354
	1358
125-4992	1354
	1358
125-5023	700
125-5341	540
	542
	544
125-5457	►184
	►186
125-5458	184
	188
125-5825	►116
125-5826	116
125-5827	116
125-5829	116
125-5835	234
	242
	244
125-5859	116
125-6224	►1379
	►1380
	►1381

► PRIMARY REFERENCE

PART NUMBER INDEX

Part	Page
	1397
	1398
	1399
125-6392	730
125-6393	730
125-6533	484
	494
125-6535	485
	489
	495
125-6536	485
	489
	494
125-6537	489
	494
125-6539	134
125-6796	264
125-6797	264
125-6806	▶1332
	1350
	1352
125-7011	654
	656
	658
	1018
125-7925	▶798
	▶800
125-7997	798
	800
125-8826	876
125-9215	1104
	1126
125-9577	716
	728
125-9578	716
	728
125-9664	860
	862
	864
	▶872
125-9740	1206
	1210
	1290
	1294
125-9794	550
126-0587	558
	562
	566
	570
	574
	578
	582
	586
	590
	594
126-0588	558
	562
	566
	570
	574
	578
	582
	586
	590
	594

Part	Page
126-1372	▶36
	40
126-1373	▶40
126-1599	152
	154
126-1600	152
126-1602	152
	154
126-1753	1338
	1340
	1342
126-2267	6
	8
	10
	▶94
126-2317	1350
126-2372	1092
126-2487	860
	862
	864
126-2741	152
126-2749	▶1237
126-2846	583
126-2847	583
126-2849	583
126-2853	▶547
126-2854	547
126-2857	531
126-2859	531
126-2869	152
	154
126-3197	737
126-3578	180
126-3579	180
126-3767	603
	609
	614
	618
	622
126-3935	▶406
126-3938	▶218
126-4885	522
	526
126-4886	526
126-5056	210
126-5144	152
	154
126-5948	1047
	1049
126-6232	152
	154
126-6513	698
126-6822	736
126-7142	1027
126-7234	294
126-7235	294
126-7292	7
	9
	10
	▶270
	▶272
	▶274
	▶276
	▶278
	▶280

Part	Page
	▶282
	▶284
126-7525	▶381
	▶382
	▶383
126-7538	132
126-7539	132
126-7574	389
	390
126-7836	554
	556
126-8588	816
	817
	818
	820
126-8924	▶1102
126-8925	▶956
	990
126-9180	1250
127-0116	558
	562
	566
	570
	583
	587
	591
	594
127-0644	1350
127-0843	750
	751
	752
	756
	757
	758
	759
	760
	761
127-1008	92
	▶464
127-1472	152
	154
127-1610	506
127-1622	152
	154
127-1695	680
127-1696	▶680
	1138
	1140
127-1697	▶1138
	▶1140
127-1805	4
	▶714
127-1806	▶582
	714
127-1807	583
127-1969	270
	272
	274
	276
	278
	280
	282
	284
127-2415	398
	402

Part	Page
	1329
	1354
	1358
127-2419	512
	516
127-2420	512
	516
127-2422	506
127-2423	▶506
	▶508
	526
127-2803	1354
	1358
127-2945	860
	862
	864
	▶868
127-3018	1354
	1358
127-3445	764
127-3446	▶764
	838
	839
	840
	841
	842
127-3511	6
	10
	▶21
127-3512	7
	▶100
127-3513	6
	8
	10
	▶48
	▶50
	▶52
	▶54
127-3514	6
	8
	10
	▶92
	▶93
127-3515	6
	8
	▶26
127-3516	6
	8
	10
	▶80
127-3517	6
	8
	10
	▶24
127-3605	90
127-4326	550
127-4532	398
	402
127-4540	1280
	1282
127-4840	1124
127-4978	218
	220
127-5134	6
	8

▶ PRIMARY REFERENCE

PART NUMBER INDEX

Part	Page
	10
	▶204
127-5156	1133
	▶1186
127-5170	1061
	1186
127-5182	406
127-5183	406
127-5419	964
127-5486	522
127-5781	▶1067
127-5782	▶1067
127-5783	▶1068
127-5784	▶1068
127-6256	550
127-6462	▶212
	213
127-6465	212
	215
127-6467	212
	215
127-6958	▶713
127-6983	1102
	▶1124
127-6984	1124
127-6985	1124
127-6986	▶988
	1102
127-6987	988
127-6988	988
127-6989	▶1082
	1102
127-6990	1082
127-6991	1082
127-6993	6
	8
	10
	▶200
127-7285	▶1116
	▶1118
	1133
127-7286	1116
127-7287	1116
127-7494	844
127-8383	1082
127-8787	4
	▶316
127-8836	▶1466
	1468
127-8928	2
	▶990
127-8929	956
127-8930	956
127-8949	550
127-8950	550
127-8953	24
127-8954	118
127-9083	1264
127-9136	1280
	1282
	▶1286
	▶1290
	▶1294
127-9138	1200
	1201
	▶1202
	▶1206
	▶1210
127-9189	726
127-9374	6
	8
	10
	▶114
127-9619	442
127-9813	7
	9
	11
	▶213
	▶214
127-9885	174
128-0317	176
128-0571	746
128-0598	114
128-0613	1410
	1414
128-0686	1410
	1414
128-0947	6
	8
	10
	▶118
128-0948	6
	8
	10
	▶550
128-1023	506
	508
	512
	516
128-1570	▶1061
128-1571	148
	149
	▶152
	▶154
128-2313	6
	8
	10
	▶192
128-2976	328
	337
	346
	352
	360
	368
128-2982	6
	8
	10
	▶90
128-3339	▶111
128-3340	111
	112
128-3341	111
128-3503	765
128-3504	▶765
	838
	839
	840
	841
	842
128-3813	111
128-4332	6
	8
	10
	▶130
128-4414	816
	817
	818
	820
128-4415	▶816
	839
128-4416	▶839
128-5107	6
	8
	10
	▶264
128-5108	6
	8
	10
	▶161
128-5109	6
	8
	10
	▶443
128-6157	506
	508
	512
	516
128-6316	506
128-6317	506
	508
128-6611	264
128-6612	130
128-7096	713
128-7097	713
128-7098	713
128-7135	264
128-7989	1252
	1257
	1261
128-8401	506
	508
	512
	516
128-8402	506
	508
	512
	516
128-8403	506
	508
	512
	516
128-8404	506
128-8405	477
	481
128-8557	252
	254
	292
128-9693	783
	786
129-0372	246
	252
	292
129-0373	246
	252
	292
129-0375	246
	252
	292
129-0447	▶1221
	▶1222
129-1192	1242
	1244
	1248
129-1609	614
	618
	622
	636
	638
129-1610	637
129-2861	893
	894
129-3069	172
129-3178	870
	872
	1202
	1206
	1210
	1286
	1290
	1294
129-4416	700
129-4607	1102
	▶1115
129-4832	248
	▶292
129-5081	1156
129-5767	1250
129-5768	1250
129-6377	▶1224
	1225
	1268
129-6628	93
	▶465
129-8169	1143
129-8171	1143
129-8172	1143
129-9208	640
129-9247	850
129-9377	1466
129-9378	1466
129-9379	1466
129-9380	1466
129-9381	1466
129-9382	1466
129-9383	1466
129-9384	1466
129-9385	1466
129-9417	200
129-9452	204
	205
130-0106	522
	526
130-0701	844
130-0956	134
	▶444
130-1812	134
	136
	138
130-1813	134
	136

▶ PRIMARY REFERENCE

PART NUMBER INDEX

Part	Page
	138
130-1814	134
	136
	138
130-1977	968
	1104
130-1985	844
130-2563	751
	758
	761
130-2596	▶202
	▶203
130-2597	181
130-2667	1242
	1244
	1248
130-2676	166
130-2677	166
130-3281	207
	208
	▶209
130-3859	▶4
130-3860	4
	▶1213
	1338
130-3863	4
	▶694
130-3864	4
	▶1268
130-3866	▶1338
	▶1340
	▶1342
130-3867	▶2
130-4607	294
130-4846	1280
	1282
130-5100	3
	1402
130-5161	3
	1402
130-5300	520
130-5853	1027
130-6178	1252
	1257
	1261
	1309
	1313
	1317
	1320
130-6183	1252
	1257
	1261
130-6188	1324
130-6366	1128
130-6889	558
	562
	566
	570
	583
	587
	591
	594
130-7439	22
	399
	403
130-7516	1350
130-7656	▶1156
	1157
	1158
130-7657	▶1150
	1166
	1168
130-7658	1066
	1068
	▶1166
	▶1168
130-7659	▶1150
	1170
	1172
130-7660	1065
	1067
	▶1170
	▶1172
130-7749	1151
	▶1157
130-7750	▶1151
130-7751	1150
	▶1157
130-7769	517
130-7953	1213
	▶1214
130-7954	▶1328
130-7975	844
130-8200	1338
	1340
	1342
130-8201	1338
	1340
	1342
130-8590	682
130-8591	4
	▶682
130-8614	726
130-9117	210
130-9143	▶210
130-9146	716
	728
130-9147	716
	728
130-9191	968
	1104
130-9213	1202
	1286
130-9214	1202
	1206
	1210
	1286
	1290
	1294
130-9215	1202
	1206
	1210
	1286
	1290
	1294
130-9216	1202
	1206
	1210
	1286
	1290
	1294
130-9218	1202
	1206
	1210
	1286
	1290
	1294
130-9219	1202
	1206
	1210
	1286
	1290
	1294
130-9220	1202
	1206
	1210
	1286
	1290
	1294
130-9221	1202
	1206
	1210
	1286
	1290
	1294
130-9222	1202
	1286
130-9223	1202
	1286
130-9224	1202
	1206
	1210
	1286
	1290
	1294
130-9225	1202
	1207
	1210
130-9226	1203
	1207
	1210
130-9227	1203
	1207
	1210
	1286
	1290
	1294
130-9228	1203
	1207
	1210
	1286
	1290
	1294
130-9233	1203
	1207
	1210
	1286
	1290
	1294
130-9234	1203
	1207
	1210
	1286
	1290
	1294
130-9235	1287
	1290
	1294
130-9719	▶1
130-9720	▶1278
130-9721	▶932
130-9989	844
130-9990	844
131-0136	614
	618
	622
131-0167	638
131-0401	4
	▶728
131-0447	876
131-0463	▶252
	291
131-0467	728
131-0545	1203
	1207
	1210
	1287
	1291
	1294
131-0782	733
131-0783	733
131-0785	▶733
	1157
131-0786	733
131-1650	766
131-1721	132
131-1722	▶132
131-2441	1203
	1207
	1210
	1287
	1291
	1294
131-3098	255
131-3234	1076
131-3235	1075
131-3815	172
	174
131-3916	526
131-3925	▶698
131-3926	698
131-3927	698
131-4125	1268
	1328
	▶1329
131-4242	1298
	1302
131-4258	1200
	1201
	▶1252
	▶1256
	▶1260
131-4259	▶1200
	1268
131-4426	▶1396
131-5082	4
	▶706
131-5167	1298
	1302
131-5354	1203

▶ PRIMARY REFERENCE

PART NUMBER INDEX

Part	Page
	1207
	1210
	1287
	1291
	1294
131-7123	80
131-8422	1396
	▶1397
	▶1398
	▶1399
131-8428	159
	163
	167
132-0338	1197
	1198
132-1485	1157
	▶1184
132-1486	1184
132-1487	1184
132-1488	1184
132-3457	706
132-3458	706
132-3581	844
132-3629	602
	608
	614
	618
	622
	▶637
132-3630	637
	▶638
132-3631	638
132-3634	638
132-3636	638
132-3638	638
132-3871	1203
	1207
	1210
	1287
	1291
	1294
132-4484	143
	144
132-4485	291
132-4907	898
	900
	920
	922
132-4922	902
132-4924	638
132-4985	706
132-4986	706
132-5125	159
	163
	167
132-5311	291
132-5312	▶143
132-5313	▶291
132-5538	631
132-5546	631
132-5793	1207
	1210
	1291
	1294
132-6284	694
132-6453	695
132-7077	852
	854
	856
132-7121	706
132-7122	706
132-7141	695
132-7187	159
	163
	167
132-7370	159
	163
	167
132-7419	876
132-7450	876
132-7950	694
132-7994	1096
	1098
132-8799	1150
	1157
	▶1158
132-8875	552
132-8876	554
	556
	614
	618
	622
132-9455	626
	875
132-9899	652
	878
132-9900	652
	878
133-0155	844
133-0223	1120
133-0224	1120
133-0225	1094
	1096
133-0227	1187
133-0229	▶1120
	▶1122
	1133
	1134
	1135
133-0230	▶1134
133-0231	▶1094
	1134
133-0232	1134
	▶1187
133-0770	112
133-0771	2
	▶112
133-1121	586
	590
133-1124	587
	591
133-1278	552
133-1279	554
	556
133-1280	▶552
	603
133-1288	552
133-1296	▶554
	609
	614
133-1298	554
133-1448	▶388
133-1705	260
133-1706	296
	297
133-1707	296
133-1708	272
	▶296
133-2015	1094
	1096
133-2198	554
	556
133-2249	880
	1054
133-2250	626
	▶1054
133-3246	▶626
	652
133-3248	673
133-3255	650
	▶652
133-3283	694
133-3285	694
133-3801	476
	480
133-3867	24
133-3868	24
133-5082	1282
133-5631	748
	752
	754
	757
	759
	760
	761
133-6012	694
133-6036	1203
	1211
	1287
	1291
	1295
133-6107	1203
	1287
	1291
133-6126	695
133-6127	694
133-6335	▶416
	429
133-6336	▶417
	431
133-6438	1
	▶14
133-6441	1
	▶188
	▶190
133-6442	▶1
	2
133-6443	109
133-6445	109
133-6446	▶109
133-6595	844
133-6974	844
133-6983	694
133-7145	▶968
	1133
	1134
	1135
133-7212	844
133-7214	844
133-7230	844
133-7231	844
133-8468	860
	862
	864
133-9499	934
133-9500	934
133-9501	934
133-9522	481
133-9528	181
133-9529	181
133-9944	152
	154
134-0126	▶1
134-0127	▶396
134-0165	1252
	1257
	1261
134-0978	▶431
	▶432
134-1035	695
134-1487	170
	▶174
134-1598	274
	▶297
134-1599	297
134-2252	346
	352
	354
	360
	362
	368
	370
	▶470
134-2263	105
134-2521	695
134-2522	694
134-3992	1282
134-3993	1283
134-3997	1240
	▶1246
134-5060	944
	948
	957
134-5418	978
	982
134-5419	978
	982
134-6062	860
134-7258	1469
134-7264	508
134-8079	602
	608
	614
	618
	622
134-9404	298
134-9405	276
	▶298
135-0327	▶16
135-0743	2

▶ PRIMARY REFERENCE

PART NUMBER INDEX

Part	Page
	▶751
135-0796	124
135-0797	124
135-0821	▶1104
135-0822	2
135-0823	2
135-0824	▶2
	4
135-1742	932
	939
135-1823	1334
135-1828	3
135-1829	3
135-1830	▶3
135-1831	3
135-1832	3
135-1833	2
	3
135-1834	3
135-2542	▶1061
135-2610	1282
135-2652	260
	300
	306
135-2655	260
135-2806	695
135-2808	695
135-3173	726
135-3199	▶310
	1278
135-3200	310
135-3202	310
135-3205	310
135-3206	310
135-3209	310
135-3210	▶398
	▶402
	1278
135-3225	105
135-3678	411
135-3679	412
135-3703	6
	10
	▶162
135-3704	6
	8
	10
	▶894
135-4487	212
135-4553	178
135-4928	174
	176
135-4938	▶1010
135-4939	▶1012
135-4952	1010
	1012
	1014
	1015
135-4953	1010
	1012
	1014
	1015
135-5105	1128
135-5114	1104
	1128
135-5424	152
	154
135-6243	▶411
135-6245	▶412
135-6916	398
	402
135-6944	398
	402
135-7086	▶716
135-7810	2
	▶8
135-8172	1082
135-8173	1082
135-8174	1082
135-8175	1082
135-8176	1082
135-8178	1082
135-8179	1082
135-8288	161
135-8581	860
	862
	864
135-8654	152
	154
135-8761	398
	402
135-8771	▶1056
135-8772	1056
135-8773	1056
135-9579	1181
135-9580	1181
135-9598	▶1181
135-9880	24
135-9942	118
135-9980	7
	8
	10
	▶101
136-0486	184
	186
	188
	190
136-1107	176
136-1543	1345
136-1544	1197
	1198
136-1869	256
	257
	258
	259
136-1953	1203
	1206
	1211
	1287
	1290
	1291
	1295
136-2076	600
136-2077	600
136-3315	522
	526
136-5158	900
136-6426	154
136-6427	▶148
	▶149
136-6428	152
	154
136-7476	508
136-7477	508
136-7609	58
	▶61
137-1339	171
	▶176
137-1344	176
137-1724	902
137-1741	902
137-1788	8
	▶22
137-1789	8
	▶166
137-1790	166
	399
	403
137-1970	176
137-2082	152
	154
137-3936	888
	890
137-3937	1352
137-4707	178
137-4830	858
137-5532	630
137-6500	45
	46
137-6501	45
	46
137-7089	▶897
137-7365	▶971
137-7369	1377
	1378
137-7372	▶970
137-7375	▶939
137-7401	716
137-8479	1130
	1160
	1164
	1168
	1172
137-8793	627
	874
137-8794	627
	874
137-8795	▶627
	652
137-8796	652
	▶673
138-0507	716
	728
138-0994	695
138-1015	1377
	1378
138-1025	1377
	1378
138-1103	476
	480
138-1224	▶144
138-1876	116
138-1877	116
138-2828	1160
	1164
	1168
	1172
138-2829	1132
138-2833	1131
138-2834	1132
138-2835	1131
138-3094	461
138-3622	7
138-4037	7
138-4038	7
138-4039	7
138-4040	7
138-4042	7
138-4044	7
138-4045	7
138-4046	7
138-4123	8
	▶86
138-4125	6
	8
	10
	▶27
138-4176	614
	618
	622
138-4309	298
	300
	302
	306
138-4311	298
	300
	302
	306
138-4313	298
	300
	302
	306
138-6256	▶260
	298
	300
	302
	306
138-6744	176
138-7478	734
138-8221	734
138-8223	▶734
138-8361	734
138-8711	399
	403
138-8745	264
138-8754	256
138-8756	▶256
	287
138-8886	1350
	1352
138-9370	134
	136
139-0178	508
	512
	516
139-0466	1140
139-1507	207
139-1585	136
	▶504
139-2429	1140

▶ PRIMARY REFERENCE

PART NUMBER INDEX

Part	Page
139-2455	968
	1104
139-2456	968
	1104
139-2468	1218
	▶1225
	1232
139-4592	1222
	▶1232
139-8660	416
	417
140-2749	7
140-3107	504
140-3108	136
	138
	504
140-9700	▶752
141-0284	246
	252
	292
141-1963	1140
141-1964	1140
141-2723	1116
	1118
	1120
	1122
141-6607	54
141-7219	1116
	1120
141-8770	512
	516
141-9484	512
	516
141-9492	▶936
141-9497	614
	618
	622
141-9853	61
141-9854	61
141-9873	512
	516
141-9874	513
	517
141-9875	513
	517
142-0044	14
142-0406	218
	220
142-2633	898
142-2723	898
142-2725	898
	900
142-2766	513
	517
142-2768	513
	517
142-2803	783
142-2804	786
142-2805	784
	788
142-3363	376
	391
	▶392
142-5867	32
142-6217	34
142-6921	62
	63
	64
	65
	66
142-7072	34
142-8438	614
	618
	622
142-8620	1264
	1266
143-0013	866
143-1229	208
143-1230	207
143-1288	1198
	1382
	1384
143-3615	▶43
	44
	46
143-4090	1256
	1312
	1316
143-4991	1358
143-5031	398
	402
	1358
143-5139	936
	▶1014
143-5140	936
	▶1015
143-5493	398
	402
	1358
143-5494	398
	402
	1358
143-7543	4
	▶714
143-7547	▶586
	▶590
	714
143-7549	587
	591
143-7550	587
	591
143-7551	587
	591
143-7552	587
	591
143-8656	154
144-0195	1424
	1432
144-0331	876
144-0835	278
	282
	▶300
144-0837	300
145-0326	1408
	1414
	1418
145-1144	881
145-2363	897
145-2364	897
145-2365	897
145-2366	897
145-2367	897
145-2859	1358
145-2888	614
	618
	622
	▶668
145-5150	▶512
	▶516
	522
145-7450	668
145-8503	140
145-8739	1461
145-8740	1460
145-8741	1460
145-8934	1
	▶396
146-0240	888
	890
146-2574	1201
	▶1248
146-2581	▶1201
146-2582	▶1201
	1268
146-3584	805
146-3672	982
146-4370	154
146-6204	178
146-6924	▶62
	▶63
	▶64
	▶65
	▶66
	1402
146-9793	398
	402
147-0071	558
	562
	570
	574
	578
	582
	586
	590
	595
147-0319	▶418
	426
	430
147-0633	495
147-1226	533
	534
147-1680	▶449
	856
	862
	864
147-4549	1414
147-5352	776
	780
147-5353	778
	780
147-5399	658
	▶672
147-6522	1414
147-6523	1414
147-6541	1414
148-2712	854
	856
148-2713	854
	856
148-2714	854
	856
148-3663	854
	856
148-3664	854
	856
148-3749	1410
	1414
148-8313	949
	964
	1102
148-8319	949
	958
148-8325	796
148-8326	796
148-8327	949
	958
148-8334	949
148-8335	138
	949
	958
148-8336	888
	890
	949
	957
	964
148-8338	949
	959
148-8341	800
148-8342	138
148-8347	948
	956
148-8353	949
	957
	964
148-8360	949
	958
148-8367	949
	958
148-8378	888
	890
	948
	956
	964
	976
148-8385	796
148-8407	949
148-8411	949
148-8429	138
148-8435	948
	958
148-8439	956
	976
	1102
148-9652	354
	362
	370
149-1950	300
	302
	304
149-2404	1398

▶ PRIMARY REFERENCE

PART NUMBER INDEX

Part	Page
	1399
	▶1414
149-2407	532
	533
149-2408	532
149-2888	532
149-2889	532
	533
149-3893	▶384
149-4280	246
	702
149-4745	1389
	1390
	1392
	1393
	1398
149-4889	844
149-5264	262
149-5628	672
149-6065	614
	618
	622
149-6371	1261
	1320
149-7027	▶480
149-7028	480
149-8199	1206
	1290
149-8218	1206
	1210
	1290
	1294
149-9934	246
	248
	250
149-9935	248
	250
149-9936	▶248
	▶250
150-0316	▶198
150-0413	▶408
150-1156	98
	99
150-1302	534
150-1960	62
	63
	64
	65
	66
	70
	75
	76
150-2392	234
	242
	244
150-3036	950
	958
	976
150-3037	408
150-4047	796
150-4048	408
	800
150-7989	455
151-2940	30
	32
151-2941	30
	32
151-2946	80
151-3015	183
151-3833	662
151-4854	422
	438
151-7075	▶385
151-8071	508
	512
	516
151-9275	876
152-2938	268
152-2939	268
152-3405	391
	396
152-3409	▶391
	396
152-4055	7
152-5505	940
152-8405	1188
152-8410	▶1134
152-8427	422
	425
	▶426
153-0976	425
	440
153-1157	614
	618
	622
153-1227	▶3
153-1256	176
153-1370	750
	752
	756
	757
	759
	760
	761
153-2073	▶419
	432
153-2681	1234
153-3699	70
	74
	76
	124
	126
	154
	246
153-3946	1261
	1320
153-5442	542
	▶654
153-5447	654
	656
	658
	▶662
153-5479	631
153-5480	631
153-5481	630
153-5482	630
153-6230	138
153-6238	958
153-6240	247
153-6242	950
	956
153-6281	370
	480
153-6781	1261
	1320
	1377
	1378
153-9516	178
154-3079	1334
154-3306	806
	807
	808
	809
	811
	812
	813
	814
154-3308	784
	788
	790
154-3771	183
154-4492	1090
	1092
	1094
	1096
	1098
154-6732	300
	302
154-6734	300
	302
	306
154-6735	300
	302
	306
154-7025	751
	758
154-9571	▶385
155-0058	3
	▶10
	1402
155-2260	50
	455
	456
	457
	458
	459
	460
	461
	462
	465
155-2270	134
	136
	138
	672
	844
155-2271	506
	1432
155-2745	744
155-2758	▶817
	840
155-2759	▶818
	841
155-4426	660
155-4788	107
155-5462	656
	658
155-6637	244
156-1148	▶1370
	1381
	1390
	1393
156-4202	▶774
	841
156-4203	774
156-4204	774
156-4205	774
156-4208	817
	820
156-4209	818
	820
156-4210	▶820
	841
	842
156-4213	▶828
	841
156-4215	828
	830
	832
	834
156-5462	246
	702
	704
156-5545	1197
	1198
156-5702	▶840
156-5703	▶840
156-5704	▶840
156-5705	840
	▶841
156-5706	▶776
	840
156-5707	▶778
	841
156-5708	▶830
	840
156-5709	▶832
	841
156-5970	880
156-6173	1051
156-6175	1426
156-6178	1053
	1056
156-7172	379
	▶389
156-8075	1244
	1248
157-2284	1047
	1048
	1049
157-3739	1234
157-3923	544
	▶656
	▶658
158-0248	418
	419
158-0250	418
	419
158-0252	418
	419
158-3032	902

▶ PRIMARY REFERENCE

PART NUMBER INDEX

Part	Page
	904
	906
	908
	910
158-8077	▶377
	▶378
159-0835	257
159-0836	▶257
	288
159-1966	▶183
	186
	190
159-2950	1367
	1378
	▶1400
159-2951	1220
	▶1401
159-7351	862
	864
159-7352	862
	864
159-7623	14
160-0785	▶841
160-1164	▶246
160-1758	377
	▶393
160-2540	▶754
	841
	842
160-4102	247
160-4876	246
160-4928	562
	578
	590
	594
	▶640
160-4930	246
160-5458	1118
	1122
160-5843	1047
	1048
	1049
160-5844	1047
	1048
	1049
160-6539	1118
160-6540	1118
160-6765	1122
160-6767	1122
160-7165	1400
	1401
	▶1418
160-7765	1414
160-7766	1414
160-7767	1414
160-8178	98
	99
160-9874	7
161-0018	180
161-0570	▶385
161-4177	▶386
161-5967	1298
	1302
161-7128	14
161-7293	90
161-8627	300
	302
	306
161-8979	▶450
	864
161-9227	754
	▶756
161-9840	1140
161-9862	63
	▶67
161-9863	67
161-9864	67
161-9925	239
	▶456
161-9926	203
	238
	▶457
161-9931	282
	▶458
162-0149	237
	238
	239
	▶242
162-0150	242
	244
162-0151	242
	244
162-0152	242
	244
162-0153	242
162-0155	242
162-0158	242
162-0160	242
	244
162-2167	807
	808
	812
	813
162-2168	788
	790
162-2501	268
162-6823	6
	8
	10
	▶380
162-7209	900
162-7487	900
162-7863	807
	808
	812
	813
162-7864	788
	790
163-1101	▶744
163-1146	1408
	1418
163-1532	112
163-2661	1404
163-3103	205
163-3104	205
163-3432	▶1270
163-4719	517
163-5455	220
	222
	224
	226
164-0759	300
	302
	306
164-2108	660
	881
164-3417	313
164-4146	1362
164-4531	1197
	1198
164-4540	1036
164-4610	214
	▶215
164-4883	1346
	1347
164-5025	70
	73
	76
164-5028	70
	73
164-5567	948
164-5602	949
164-6093	▶874
	878
164-7577	361
	369
	▶498
164-9429	▶1367
165-4026	516
165-5603	1056
165-6052	152
165-6064	1118
	1122
165-6881	300
165-8079	556
165-8428	▶556
	618
	622
166-4113	1131
	1132
166-5985	300
	302
	306
166-6781	1408
	1418
166-6928	▶1331
	1352
166-7221	1414
166-7225	1399
166-7401	1414
166-9145	93
166-9443	790
166-9444	790
166-9445	790
166-9446	790
167-1709	54
	▶459
167-1884	430
167-1946	718
	▶790
167-1949	4
	▶718
167-2190	924
167-2209	914
	918
	928
	930
167-2211	900
	920
	922
167-2216	902
	904
	906
	908
	910
167-2300	924
167-2320	914
	918
	928
	930
167-2324	920
	922
167-2331	902
	904
	906
167-2452	924
167-2471	914
	918
	928
	930
167-2474	900
	920
	922
167-2482	902
	904
	906
	908
	910
167-8132	56
167-9269	215
167-9524	660
	881
168-4538	98
168-8772	1305
169-0697	1346
169-1024	1347
169-1025	1384
169-1026	1382
169-1034	280
	▶302
169-1035	302
169-1216	1036
169-1644	1108
	1112
169-3189	248
	250
169-7055	630
	631
169-7380	1418
169-7443	1261
	1320
169-9649	▶1424
	1426
169-9650	1424
170-0235	1260
	1320
170-1112	1197
	1198
170-1114	1197
	1198

▶ PRIMARY REFERENCE

PART NUMBER INDEX

Part	Page
170-1115	1197
	1198
170-5293	1261
	1320
170-5921	1404
170-8590	1362
171-1230	1382
	1384
171-5349	466
	467
171-5809	▶842
171-6682	1382
	1384
171-6959	1190
171-8708	500
	▶501
172-0802	387
	▶390
172-0986	1260
	1320
172-1641	▶804
172-1642	804
172-1643	804
172-2391	880
172-2392	875
	▶880
172-2416	1382
	1384
172-3280	98
172-3852	▶757
172-4001	1198
172-4880	1260
	1320
172-6581	1384
172-6588	1350
172-8549	1250
172-8550	1250
172-9291	1206
	1210
	1290
	1294
172-9292	1206
	1210
	1290
	1294
172-9313	93
172-9389	378
	▶394
	471
173-0147	99
173-0148	99
173-0950	639
173-1028	▶1197
	▶1198
	1382
	1384
173-2024	1112
173-2052	1345
173-3083	1386
173-3084	1387
173-5787	1400
	1401
173-7035	1400
	1401
173-7126	253
173-7188	41
	44
	46
173-7756	912
	914
	916
	918
	920
	922
173-9779	924
174-0049	▶220
174-0050	220
	222
	224
	226
174-0051	▶222
174-0677	200
174-1494	1211
	1294
174-1495	1266
174-1503	1274
174-2231	▶1302
	1418
174-2237	1302
174-3777	646
174-3998	200
174-4895	209
174-4909	874
	▶881
174-5732	1108
	1112
174-5733	1108
	1112
174-6052	949
174-7468	▶312
174-7469	313
174-7526	258
174-7527	▶258
	289
174-8147	▶996
174-8943	300
	306
175-0288	982
175-0289	982
175-3185	998
175-3616	651
175-4972	▶875
	878
175-7162	1320
175-7783	178
175-7784	178
175-7900	924
176-0258	652
	878
176-0259	652
	878
176-0394	1051
	1053
	1056
176-0864	938
	940
176-1339	1134
	▶1188
176-1602	230
	▶451
176-5321	651
	▶660
176-5618	▶253
	254
177-1407	892
	▶1036
177-1860	1362
177-1862	1362
177-1863	1382
	1384
177-4308	138
177-4930	1345
177-4935	▶1362
	1382
	1384
177-4937	1386
	1387
177-7496	99
177-9388	151
178-0589	1189
178-0605	▶1345
	1346
	1347
178-0607	1362
178-0608	1362
178-0609	1362
178-1782	▶940
	1125
178-1783	1125
	▶1128
178-1784	▶1125
178-2552	1128
178-2553	1128
178-2972	7
178-7070	▶1306
178-7260	2
	▶758
178-7907	1345
178-9300	65
	▶68
178-9523	68
178-9524	68
178-9603	1189
	1190
179-0006	138
179-7024	6
	8
	10
	▶205
179-7087	530
180-2398	▶1062
180-2399	▶1096
	1135
180-2400	1135
	▶1189
180-2401	▶1135
180-2404	▶1135
180-2409	1063
180-3397	▶70
180-3921	74
	104
180-4525	▶104
180-4526	70
	74
	76
180-5559	1386
	1387
180-5560	1386
	1387
180-6632	▶1402
180-6644	240
	▶244
180-6645	244
180-6646	244
180-6647	244
180-7180	1260
	1320
180-7181	1260
	1320
180-7304	▶1382
	1386
180-7305	▶1346
	1382
180-7306	▶1384
	1387
180-7307	▶1347
	1384
180-7467	▶126
	147
	1402
180-7883	126
180-7884	126
180-7886	126
180-7887	126
180-7891	126
180-7912	126
180-7913	126
180-9340	460
	461
	462
180-9639	70
	73
	76
181-0000	▶842
181-0001	▶843
183-3648	1386
	1387
183-5011	361
	▶466
183-5116	66
	▶72
	75
183-7424	396
	471
184-1192	1036
184-2298	1382
	1384
184-2299	1382
	1384
184-2300	1346
	1347
184-4396	815
	817
	818
	820
184-6011	▶1386
	1400
184-6012	▶1387
	1401
185-1713	▶1063

▶ PRIMARY REFERENCE

PART NUMBER INDEX

Part	Page
185-1714	1135
	►1190
185-1715	►1098
	1135
185-1929	1352
185-3502	652
	878
185-3503	652
	878
185-4335	►151
185-5746	►73
	74
185-9977	250
	►254
186-3161	536
186-3301	1063
186-3302	►1063
186-3735	315
	451
	452
	468
	498
	844
	1047
	1049
	1269
	1320
186-3736	458
	844
186-4854	716
	728
186-4857	1424
186-5899	1220
	►1426
187-1507	99
187-1679	313
187-4012	►74
187-6282	830
	832
	834
187-6289	776
	778
	780
188-2034	318
	326
188-2901	1228
188-2903	1228
188-2904	1228
188-3548	72
188-3549	72
188-5095	220
	222
	224
	226
188-6140	890
	►1017
188-6141	1017
188-7067	674
188-7068	674
188-7069	674
188-8849	418
	419
189-0981	550
189-1839	880
189-3063	595
189-3064	594
189-3065	594
189-3094	126
189-5373	928
189-6244	595
189-8869	594
189-8874	594
189-9809	1358
189-9810	1358
190-5386	1468
190-7653	6
	8
	10
	►32
191-1814	704
191-4959	18
191-8242	76
191-9292	1228
192-0722	►594
	714
192-0729	126
	►651
192-1322	►44
192-2208	99
192-2843	126
192-5425	186
	188
	190
192-6148	75
192-6156	►75
	147
	1402
192-6445	►920
	1133
	1134
	1135
192-6446	►922
	1133
	1134
	1135
192-6447	920
	922
192-6448	920
	922
192-8807	99
192-8808	7
	8
	10
	►99
193-2550	369
	►467
193-3080	968
	1104
193-3081	968
	1104
194-1586	396
	►471
194-5226	457
194-5227	457
194-6722	240
	►460
194-6724	54
	►461
194-6725	284
	►462
194-7034	230
	232
194-7735	1
	►18
195-5853	813
	814
195-5854	808
	809
195-5855	804
	►813
	840
	842
	843
195-5856	►808
	840
	842
	843
195-7173	1182
195-7174	1182
195-9170	1182
195-9171	1182
196-2781	949
196-3829	►224
196-8562	►780
	842
196-8563	►834
	842
196-9523	28
	30
197-2715	►1306
197-5108	1108
197-5109	1110
197-5110	1352
197-5111	1352
197-5112	1352
197-5113	1352
197-7689	1408
	1418
197-8492	1
	►809
197-8493	1
	►814
197-8504	224
197-8663	178
198-3137	18
198-3138	18
198-7711	796
198-7912	►259
	290
199-3209	622
2	
200-2670	3
200-2964	1017
201-0357	18
201-0358	1
	►76
201-0700	►1226
201-0701	1226
	►1228
201-1230	1182
201-4155	306
201-4201	284
	►304
201-4202	304
	►306
201-4203	306
201-7270	►674
	878
201-7272	877
	►878
202-0349	►1271
202-1069	897
202-1070	897
202-2703	320
202-3572	140
202-7400	►877
203-2070	1266
203-7703	1400
	1401
203-7802	►147
203-9380	►735
203-9381	735
203-9382	735
203-9383	735
204-7949	232
	►452
204-9530	1266
204-9531	1266
204-9532	1266
205-1679	402
205-4276	312
	►313
205-4285	395
206-2630	7
	9
	10
	►290
206-6900	726
207-2681	►759
207-2682	►760
208-1686	1228
208-1687	1228
208-1691	1228
208-3576	►761
208-4826	►226
208-4831	226
208-5183	►1182
208-5804	6
	8
208-5807	10
209-3186	754
210-1926	1260
	1320
210-3907	1260
	1320
210-4720	796
210-4721	796
210-4723	796
210-4724	796
210-4725	796
210-6615	►796
210-7291	1211
	1294
210-8580	796
210-8629	1342
211-0243	796
211-1808	1469

► PRIMARY REFERENCE

PART NUMBER INDEX

Part	Page	Part	Page	Part	Page	Part	Page
213-7322	754						
214-9183	858						
214-9184	858						
215-8140	850						
216-4541	126						
	127						
217-5703	216						
217-7933	1362						
217-8433	1305						
220-4386	181						
220-4387	181						
220-7079	►838						

► PRIMARY REFERENCE

CATERPILLAR®

© 2002 Caterpillar
All Rights Reserved

Printed in U.S.A.

SEBP2478-35
VOLUME I
Pages 1-676

D10R Track-Type Tractor

3KR1-Up