CATERPILLAR®

SEBP3906-33
January 2010

VOLUME III
Pages 1397-2094

Parts Manual

SIS

See "General Information" for New Parts Manual Features.

988H Wheel Loader

BXY1-Up (Machine)
RHX1-Up (Engine)
DRT1-Up (Transmission)
SMA1-Up (Transmission)
6AT1-Up (Torque Converter)
TCR1-Up (Torque Converter)

Powered By C18 Engine

This Parts Manual is also Available in .PDF Format on Compact Disc(CD-ROM)-Caterpillar Form No. SERP3906

Product and Dealer Information

Note: For product identification plate locations, see the section “Product Identification Information” in the Operation and Maintenance Manual.

Delivery Date: _____

Product Information

Model: _____

Product Identification Number: _____

Engine Serial Number: _____

Transmission Serial Number: _____

Generator Serial Number: _____

Attachment Serial Numbers: _____

Attachment Information: _____

Customer Equipment Number: _____

Dealer Equipment Number: _____

Dealer Information

Name: _____ Branch: _____

Address: _____

_____

_____

	Dealer Contact	Phone Number	Hours
Sales:			
Parts:			
Service:			

MEMORANDA

TABLE OF CONTENTS

Name	Page
GENERAL INFORMATION	A6
REPAIR ALTERNATIVES	A9
SUPPLEMENTAL COOLANT ADDITIVES	A10
MAINTENANCE PARTS	A11
INDEX	A17
MACHINE ARRANGEMENT	1
CHASSIS AR	1
COMMON AR	3
CONVERSION AR-MACHINE	3
OPTION AR	4
OPTION AR-COLD WEATHER	5
OPTION AR-GUARD	5
STEEL MILL AR	6
ENGINE ARRANGEMENT	12
ENGINE AR	12
ENGINE AR-COMPLETE	13
ENGINE AR-CORE	19
INSTALLATION AR-ENGINE	23
BASIC ENGINE	24
ACTUATOR GP-VALVE	24
ADAPTER GP-PUMP DRIVE	26
BASE GP-VALVE COVER & INJ HARN	27
BELT TENSIONER GP	33
CAMSHAFT GP	34
COVER GP-CYLINDER BLOCK	36
COVER GP-FRONT HOUSING	38
COVER GP-SOUND SUPPRESSION	40
COVER GP-VALVE MECHANISM	41
CRANKSHAFT GP	47
CYLINDER BLOCK AS	48
CYLINDER BLOCK GP	53
CYLINDER HEAD AS	59
CYLINDER HEAD GP	67
DAMPER GP	75
DRAIN GP-ENGINE OIL	76
DRIVE GP-ACCESSORY	77
DRIVE GP-PUMP	78
ENGINE BRAKE GP	79
FASTENER GP-FRONT HOUSING	80
FASTENER GP-VALVE MECHANISM	82
FLYWHEEL GP	83
GEAR GP-CAMSHAFT	84
GEAR GP-FRONT	85
HOUSING GP-FLYWHEEL	88
HOUSING GP-FRONT	92
LIFTING GP-ENGINE	97
MECHANISM GP-FUEL PUMP & VALVE	99
MOUNTING GP-ALTERNATOR & COMPR	106
PAN GP-OIL	107
PANEL GP-SOUND SUPPRESSION	112
PISTON & ROD GP	115
PLUG GP-CYLINDER BLOCK	117
PLUG GP-CYLINDER HEAD	119
PULLEY GP-CRANKSHAFT	120
ROCKER ARM GP	121
SEAL GP-CRANKSHAFT	132
SUPPORT GP-ENGINE	134
LUBRICATION SYSTEM	136
EXTENSION GP-FUMES DISPOSAL	136
FASTENER GP-OIL PUMP MOUNTING	137
FILLER GP-ENGINE OIL	138
FILTER GP-ENGINE OIL	139
FUMES DISPOSAL GP	145
GAUGE GP-OIL LEVEL (DIPSTICK)	146
LINES GP-ENGINE OIL	147
LINES GP-TURBOCHARGER OIL	153
OIL CHANGE GP-HIGH SPEED	155
PUMP GP-ENGINE OIL	157
COOLING SYSTEM	158
COOLING AR	158
COOLING AR-HIGH AMBIENT TEMP	158
FAN & BAFFLE GP	159
FAN GP-SUCTION	161
FASTENER GP-WATER PUMP	166
LINES GP-WATER	167
PUMP GP-WATER	187
RADIATOR GP	190
VALVE GP-RADIATOR DRAIN	198
AIR INLET AND EXHAUST SYSTEM	199
AFTERCOOLER GP-AIR	199
AIR CLEANER GP	201
COVER GP-TURBOCHARGER	203
DUST EJECTOR GP	204
EXTENSION GP-EXHAUST	205
LINES GP-AIR	207
MANIFOLD GP-EXHAUST	210
MOUNTING GP-MUFFLER	211
MUFFLER GP	212
SHIELD GP-MANIFOLD	213
TURBOCHARGER GP	214
FUEL SYSTEM	220
ADAPTER GP-FAST FILL FUEL	220
FILTER GP-FUEL	223
FILTER GP-WATER SEP & FUEL	231
FUEL AR-FAST FILL	232
LINES GP-FUEL	234
LINES GP-FUEL HEATER	256

TABLE OF CONTENTS

Name	Page
MANIFOLD GP-FUEL	257
PLUG GP-FUEL FILTER BASE	258
PUMP & MTG GP-FUEL TRANSFER	259
PUMP GP-FUEL INJECTION	261
PUMP GP-FUEL PRM & PRIM FILTER	264
PUMP GP-FUEL PRM & WATER SEP	265
TANK & MTG GP-FUEL	266
TANK GP-FUEL	267
VALVE GP-CHECK	270
VALVE GP-PURGE	274
ELECTRICAL AND STARTING SYSTEM	275
ALARM GP	275
ALTERNATOR GP-CHARGING	276
BATTERY & WIRING GP	279
CAMERA AR	290
CONNECTION GP-ELECTRICAL	291
CONTROL & MTG GP-COMMUNICATION	292
CONTROL & MTG GP-ENGINE ELEK	295
CONTROL GP-LIFT & TILT POS	297
CONTROL GP-UNPROGRAMMED	299
ELECTRICAL AR	304
ELECTRONICS GP-COMMUNICATION	306
ELECTRONICS GP-IMPLEMENT	307
ELECTRONICS GP-MONITOR	309
ELECTRONICS GP-POWER TRAIN	310
FASTENER GP-ELECTRONICS	313
HEATER AR-FUEL	318
HEATER GP-FUEL	319
HEATER GP-JACKET WATER	321
INSTALLATION AR-COMMUNICATION	325
LAMP GP-DOME	326
LAMP GP-FLOOD	327
LAMP GP-HEAD	339
LAMP GP-INDICATOR	340
LAMP GP-SIGNAL	341
LAMP GP-WARNING BEACON	344
LIGHTING AR-FLOOD & SIGNAL	346
LIGHTING AR-SIGNAL	346
LIGHTING AR-STOP & FLOOD	347
LIGHTING GP-FLOOD	349
LIGHTING GP-FLOOD & SIGNAL	370
LIGHTING GP-STOP	390
LIGHTING GP-STOP & TAIL	392
LIGHTING GP-WARNING BEACON	394
MOUNTING GP-SENSOR	402
PLUG GP-CONNECTOR	405
SENSOR & MTG GP-LIFT POSITION	406
SENSOR & MTG GP-TILT POSITION	408
SENSOR GP-ENGINE	410
SENSOR GP-POSITION	414
SENSOR GP-PRESSURE	419
SENSOR GP-SPEED	428
SENSOR GP-TEMPERATURE	432
STARTING AID GP-ETHER	441
STARTING MOTOR GP-ELECTRIC	443
SWITCH GP-BYPASS	452
SWITCH GP-DISCONNECT	453
SWITCH GP-ENGINE BRAKE	454
SWITCH GP-MAGNETIC	456
SWITCH GP-PAYLOAD STORE	458
SWITCH GP-PRESSURE	460
SWITCH GP-RIDE CONTROL	462
SWITCH GP-ROCKER	463
SWITCH GP-SIGNAL	465
SWITCH GP-TOGGLE	468
SWITCH GP-WIPER	469
VALVE GP-ETHER STARTING	471
WARNING GP-BACKUP	473
WIRING GP-AUTOLUBE CONTROL	474
WIRING GP-BUMPER	479
WIRING GP-CAB	484
WIRING GP-CAMERA	524
WIRING GP-COMMUNICATION	527
WIRING GP-ELECTROHYDRAULIC	529
WIRING GP-ELECTRONICS BAY	533
WIRING GP-ENGINE	582
WIRING GP-ENGINE ELECTRONIC	601
WIRING GP-FRONT	605
WIRING GP-HEATER	616
WIRING GP-MACHINE	617
WIRING GP-POWER TRAIN	641
WIRING GP-REAR	654
WIRING GP-SENSOR	657
WIRING GP-SHUTOFF	664
WIRING GP-TILT REGEN CONTROL	669
WIRING GP-TRANSMISSION	672
WIRING GP-UNIT INJECTOR	674
POWER TRAIN	675
AXLE AR-FIXED	675
AXLE AR-OSCILLATING	675
AXLE GP-FIXED	676
AXLE GP-OSCILLATING	677
CASE & PARTS GP-PLANETARY	679
CONTROL GP-TRANSMISSION HYD	680
COOLER & FAN GP-AXLE OIL	688
COOLER AR-AXLE OIL	703
COOLER GP-AXLE OIL	704
COVER GP-TRANSMISSION	710
DIFFERENTIAL & BEVEL GEAR GP	712
DIFFERENTIAL GP	714
DIFFERENTIAL GP-NOSPIN	715
FASTENER GP-AXLE MOUNTING	717
FILTER & MTG GP-POWER TRAIN	718
FILTER GP-OIL	719
GAUGE GP-OIL LEVEL (DIPSTICK)	724
GAUGE GP-SIGHT	726

TABLE OF CONTENTS

Name	Page
GEAR GP-INPUT TRANSFER	727
GEAR GP-OUTPUT TRANSFER	730
LINES GP-AXLE OIL COOLER	738
LINES GP-AXLE OIL COOLER FAN	766
LINES GP-AXLE VENT	774
LINES GP-POWER TRAIN OIL	776
MOUNTING GP-RIM	810
MOUNTING GP-TORQUE CONVERTER	810
PLANETARY GP-TRANSMISSION	811
POWER TRAIN AR	821
PUMP GP-GEAR	822
PUMP GP-TRANSMISSION	824
RIM AR	827
RIM GP-DEMOUNTABLE	828
SHAFT GP-DRIVE	830
SHAFT GP-INPUT DRIVE	834
SLIP JOINT GP	835
SUPPORT GP-TRANSMISSION	837
TIRE & RIM AR	840
TORQUE CONVERTER & HOUSING GP	846
TORQUE CONVERTER AR	859
TORQUE CONVERTER AR-LOCKUP	859
TORQUE CONVERTER GP	860
TRANSMISSION AR	872
UNIVERSAL JOINT GP	873
VALVE & MTG GP-LOCKUP CLUTCH	876
VALVE GP-CHECK	877
VALVE GP-MODULATING	878
VALVE GP-RELIEF	881
VALVE GP-SOLENOID	884
VALVE GP-TRANSMISSION CONTROL	885
WHEEL & FINAL DRIVE GP	887
FRAME AND BODY	891
BUMPER GP-REAR	891
COVER GP-ACCESS	899
COVER GP-BUMPER	900
COVER GP-ELECTRONICS BAY	907
DEFLECTOR GP-HOOD	908
DOOR GP-ACCESS	909
DRAWBAR GP	912
FENDER GP	913
FENDER GP-FRONT	914
FENDER GP-REAR	917
FIREWALL GP	921
FRAME AS-LOADER	924
FRAME AS-REAR	928
GUARD GP-BOTTOM	935
GUARD GP-CRANKCASE	938
GUARD GP-FRONT	940
GUARD GP-HYDRAULIC TANK	941
GUARD GP-POWER TRAIN	942
GUARD GP-RADIATOR	943
GUARD GP-REAR	949
GUARD GP-SENSOR	953
HARDWARE GP-LOADER FRAME	954
HARDWARE GP-REAR FRAME	960
HITCH GP-ARTICULATING	966
HOOD & GUARD GP	968
INSULATION GP-HEAT	977
LADDER & FENDER AR	979
LADDER GP	980
LINES GP-AUTOMATIC LUBRICATION	997
LINES GP-GREASE	1137
LINES GP-LUBRICATION	1147
LINK GP-STEERING FRAME LOCK	1148
LUBRICATION AR-AUTOMATIC	1149
PANEL GP-SIDE	1157
PUMP GP-LUBRICATION	1159
SHIELD GP-ENGINE COMPARTMENT	1162
STEP GP	1164
SUPPORT GP-FILTER	1165
SUPPRESSION AR-SOUND	1166
SUPPRESSION GP-SOUND	1167
TANK & PUMP GP-LUBRICATION	1172
VALVE & LINES GP-LUBRICATION	1178
VALVE GP-LUBE DISTRIBUTION	1264
BRAKING SYSTEM	1272
ACCUMULATOR GP-BRAKE	1272
BASE GP-FOOT BRAKE	1274
BRAKE GP-PARKING	1278
BRAKE GP-SERVICE	1280
CONTROL GP-FOOT BRAKE	1282
CONTROL GP-PARKING BRAKE	1284
CONTROL GP-SERVICE BRAKE	1290
LINES GP-SERVICE BRAKE	1316
PUMP GP-GEAR	1319
VALVE & MTG GP-BRAKE CONTROL	1320
VALVE GP-BRAKE CONTROL	1328
VALVE GP-RELIEF	1329
VALVE GP-SHUTTLE	1331
STEERING SYSTEM	1332
CYLINDER & MTG GP-STEERING	1332
CYLINDER GP-STEERING	1334
GUARD GP-STEERING CYLINDER	1337
LINES GP-SECONDARY STEERING	1338
LINES GP-STEERING	1346
LINES GP-STEERING NEUTRALIZER	1363
PLUG GP-CONTROL VALVE	1370
PUMP GP-GEAR	1371
PUMP GP-PISTON	1373
ROTATING GP-PUMP	1375
STEERING AR	1376
VALVE GP-CHECK	1377
VALVE GP-PILOT	1380

TABLE OF CONTENTS

Name	Page
VALVE GP-PILOT CARTRIDGE	1381
VALVE GP-PUMP CONTROL	1383
VALVE GP-RELIEF	1384
VALVE GP-SELECTOR & PRESS CONT	1386
VALVE GP-SHUTTLE	1387
VALVE GP-STEERING	1388
VALVE GP-STEERING NEUTRALIZER	1394
HYDRAULIC SYSTEM	1397
ACCUMULATOR GP-RIDE CONTROL	1397
ACTUATOR GP-PILOT CONTROL	1399
CONTROL & LINES GP-RIDE	1405
CONTROL AR-RIDE	1410
CONVERSION GP-HYDRAULIC LINES	1410
COOLER GP-HYDRAULIC OIL	1411
CYLINDER & SENSOR GP-LIFT	1413
CYLINDER & SENSOR GP-TILT	1417
CYLINDER GP-COUPLER	1421
CYLINDER GP-LIFT	1422
CYLINDER GP-LIFT & TILT	1424
CYLINDER GP-TILT	1428
FILTER & LINES GP-CASE DRAIN	1431
FILTER GP-OIL	1439
GUARD GP-TILT CYLINDER	1442
HYDRAULIC AR	1443
HYDRAULIC AR-TILT REGENERATION	1444
LINES GP-FRONT	1446
LINES GP-HYDRAULIC	1462
LINES GP-HYDRAULIC FAN	1475
LINES GP-LIFT CYLINDER	1502
LINES GP-PILOT	1507
LINES GP-TILT CYLINDER	1515
MANIFOLD GP-CONTROL	1538
MANIFOLD GP-HYDRAULIC	1539
MOTOR & MTG GP-HYDRAULIC FAN	1540
MOTOR GP-PISTON	1541
PUMP & MTG GP-HYDRAULIC FAN	1542
PUMP & MTG GP-IMPLEMENT	1544
PUMP GP-PISTON	1546
ROTATING GP-MOTOR	1559
ROTATING GP-PUMP	1560
TANK & MTG GP-HYDRAULIC	1561
TANK AR-EXPANSION	1562
TANK GP-EXPANSION	1564
TANK GP-HYDRAULIC	1566
VALVE & MTG GP-MAIN CONTROL	1572
VALVE & MTG GP-REGENERATION	1600
VALVE GP-CHECK	1602
VALVE GP-CONTROL	1604
VALVE GP-DEMAND FAN	1616
VALVE GP-MAIN CONTROL	1617
VALVE GP-MANUAL	1636
VALVE GP-PRESSURE REDUCING	1637
VALVE GP-PUMP CONTROL	1638
VALVE GP-REGENERATION	1640
VALVE GP-RELIEF	1641
VALVE GP-RIDE CONTROL	1653
VALVE GP-SHUTTLE	1655
VALVE GP-SOLENOID	1657
IMPLEMENTS	1662
BOOM & BEARING AS	1662
BOOM GP-LOADER	1664
CONTROL GP-BUCKET	1666
HARDWARE GP-BOOM	1673
LIFT AR	1679
LINKAGE GP-BUCKET	1686
PIN & SEAL GP-LINKAGE	1688
OPERATOR STATION	1691
ADJUSTER GP-SEAT	1691
AIR COMPRESSOR GP-SEAT	1692
AIR CONDITIONER & MOUNTING GP	1694
AIR CONDITIONER AR	1695
AIR CONDITIONER GP	1697
ARM GP-WINDOW WIPER	1700
CAB AR	1702
CAB AR-ENCLOSED ROPS	1705
COMPRESSOR GP-REFRIGERANT	1706
CONDENSER GP-REFRIGERANT	1708
CONTROL GP-ELECTROHYDRAULIC	1709
CONTROL GP-HANDLE	1720
CONTROL GP-MONITOR	1721
CONTROL GP-STEERING	1724
CONTROL GP-STIC	1726
CONTROL GP-STIC LOCKOUT	1729
CONTROL GP-UNPRGMED MONITOR	1731
CONTROL GP-XMSN OVERRIDE	1733
COVER GP-DASH	1734
DISPLAY GP-CAMERA	1735
DOOR GP-CAB	1740
DOOR GP-STORAGE	1751
DUCT & FILTER GP-CAB AIR	1752
DUCT GP-CAB AIR	1754
FLOOR MAT GP	1756
HORN GP-ELECTRIC	1757
INSTALLATION GP-CONTROLS	1758
INSTALLATION GP-RADIO	1761
LINER GP-CAB	1768
LINES GP-AIR CONDITIONER	1774
LINES GP-CAB HEATER	1792
LITERATURE GP	1796
MIRROR GP-REAR VIEW	1797
MODULE GP-QUAD GAUGE	1801
MONITOR AR-PAYLOAD	1802
MONITOR GP-PAYLOAD	1803
MOTOR GP-WINDOW WIPER	1809
MOUNTING GP-ANTENNA	1813

TABLE OF CONTENTS

Name	Page
MOUNTING GP-CAB	1816
OPERATOR AR	1820
PAN GP-BACKREST	1822
PAN GP-SEAT	1827
PANEL GP-INSTRUMENT	1828
PEDAL GP-GOVERNOR	1831
PLATFORM GP	1833
PLATFORM GP-CAB	1836
PLATFORM GP-OPERATOR	1838
RADIO GP	1845
RADIO GP-COMMUNICATION	1853
RECLINER GP-SEAT	1854
ROOF GP-CAB	1855
ROPS GP-ENCLOSED	1860
SEALING GP-GLASS	1878
SEAT BELT GP	1879
SEAT GP	1880
SEAT GP-SUSPENSION	1888
SUPPORT GP-HYDRAULIC CONTROL	1890
SUPPORT GP-SEAT	1897
SUPPORT GP-STEERING CONTROL	1899
SUPPRESSION GP-CAB SOUND	1902
SUSPENSION GP-SEAT	1903
VISOR GP-CAB	1905
WASHER GP-WINDOW	1906
WINDOW GP-DOOR	1907
WIPER GP-WINDOW	1909
WORK TOOLS	1926
ADAPTER GP-TIP	1926
ADAPTER-TIP	1928
BUCKET AS-COAL	1944
BUCKET AS-GENERAL PURPOSE	1946
BUCKET AS-ROCK	1950
BUCKET GP-COAL	1982
BUCKET GP-GENERAL PURPOSE	1983
BUCKET GP-ROCK	1984
COUPLER GP-QUICK	1993
EDGE AS-BASE	1997
EDGE GP-BIT & CUTTING	2000
EDGE GP-CUTTING	2000
EDGE GP-SEGMENT	2007
EDGE-CUTTING	2009
EDGE-SEGMENT	2028
FRAME GP-QUICK COUPLER	2037
GUARD GP-BUCKET CORNER	2038
PLATE-WEAR	2039
PROTECTOR GP-EDGE	2040
PROTECTOR GP-SIDE BAR	2042
TIP GP-ABRASION	2043
TIP GP-HEAVY ABRASION	2046
TIP GP-LONG	2048
TIP GP-PENETRATION	2052
TIP GP-SHORT	2057
TIP-EXTRA-DUTY	2059
TIP-HEAVY PENETRATION	2060
TIP-LONG	2061
SERVICE EQUIPMENT AND SUPPLIES	2062
CAP GP-PROTECTION	2062
CERTIFICATION GP-MACHINE	2063
FILM GP	2064
LINES GP-DIAGNOSTIC	2067
PLATE & FILM GP	2087
PLATE GP-ENGINE IDENTIFICATION	2091
PROTECTION GP-VANDALISM	2092
TOOL GP-CONTROL SERVICE	2093
PART NUMBER INDEX	B1

MEMORANDA

HYDRAULIC SYSTEM

259-4694 ACCUMULATOR GP-RIDE CONTROL—CHARGED

S/N: BXY1-UP
PART OF 254-6063 CONTROL & LINES GP-RIDE
FIELD REPLACEMENT ORDER 259-4695—PAGE 1398
AN ATTACHMENT

SMCS-5004, 5077 **i03553138**

NOTE	REF NO	GRAPHIC REF	PART NUMBER	QTY	PART NAME 1 2 3 4 5 6 (PRODUCT LEVEL)	SEE PAGE
	1	1	**158-2336**	1	VALVE-GAS	
	2	1	**183-4063**	1	ELBOW (WITH VENT HOLE)	
	3	1	**241-0037**	1	FILM-WARNING (HIGH PRESSURE, READ OMM)	
	4	1	**5M-3062**	2	BOLT (3/8-16X0.75-IN)	
	5	1	**310-6493**	1	PLATE	
					AVAILABLE REPAIR KIT(S):	
			170-0493	1	KIT-SEAL (HYDRAULIC ACCUMULATOR)	
					(INCLUDES SEAL-O-RINGS, WASHERS, RINGS & SEAL)	

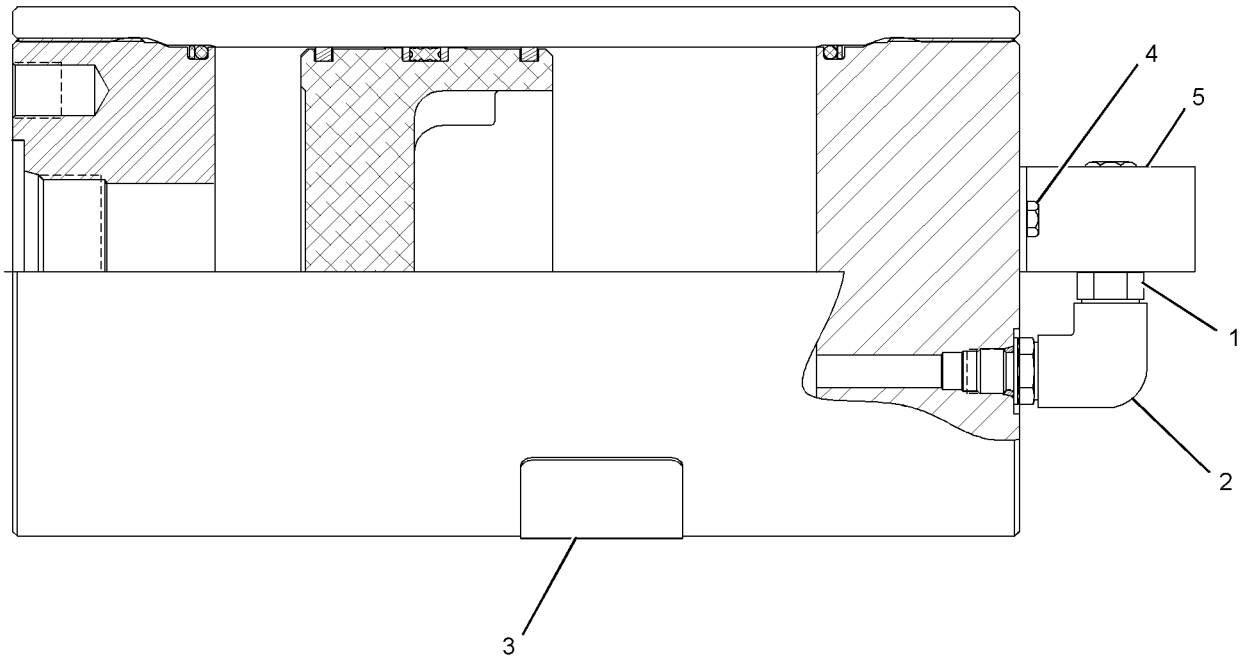

GRAPHIC #1 **<END>** g01950124

HYDRAULIC SYSTEM

259-4695 ACCUMULATOR GP-RIDE CONTROL—UNCHARGED

S/N: BXY1-UP

FIELD REPLACEMENT FOR 259-4694—PAGE 1397

SMCS-5004, 5077 **i03477121**

NOTE	REF NO	GRAPHIC REF	PART NUMBER	QTY	PART NAME 1 2 3 4 5 6 (PRODUCT LEVEL)	SEE PAGE
	1	1	**158-2336**	1	VALVE-GAS	
	2	1	**183-4063**	1	ELBOW (WITH VENT HOLE)	
	3	1	**241-0037**	1	FILM-WARNING (HIGH PRESSURE, READ OMM)	
	4	1	**5M-3062**	2	BOLT (3/8-16X0.75-IN)	
	5	1	**310-6493**	1	PLATE	
					AVAILABLE REPAIR KIT(S):	
			170-0493	1	KIT-SEAL (HYDRAULIC ACCUMULATOR)	
					(INCLUDES O-RINGS,WASHERS & SEALS)	

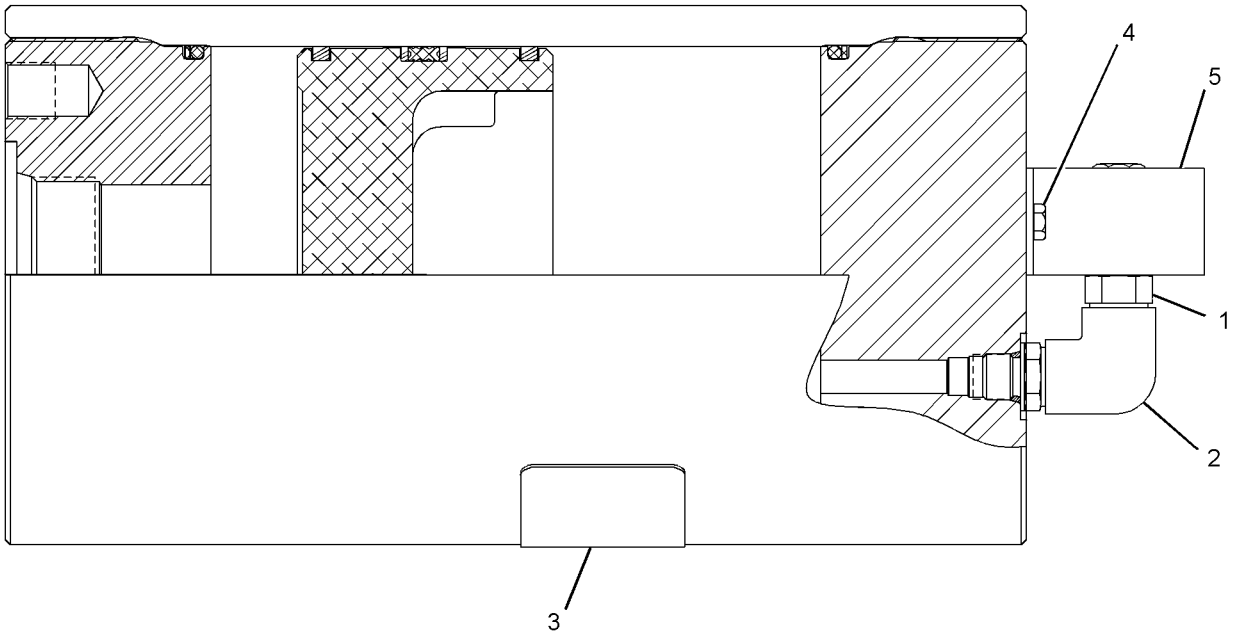

GRAPHIC #1 **<END>** g01834814

217-6719 ACTUATOR GP-PILOT CONTROL–

PROPORTIONAL SOLENOID–REGENERATION VALVE

S/N: BXY1-3999

PART OF 318-2925 VALVE GP-CONTROL, 212-8712, 212-8746, 292-8121, 292-8123 VALVE GP-MAIN CONTROL, 273-2130 VALVE GP-REGENERATION AN ATTACHMENT

SMCS-5078 **i02531192**

NOTE	REF NO	GRAPHIC REF	PART NUMBER	QTY	PART NAME 1 2 3 4 5 6 (PRODUCT LEVEL)	SEE PAGE
	1	1	**118-5083**	1	HOUSING	
	2	1	**118-5085**	1	RETAINER	
	3	1	**118-5086**	1	SPRING	
	4	1	**118-5087**	1	SPRING	
	5	1	**148-2350**	1	COIL AS	
	6	1	**154-4133**	1	CARTRIDGE AS	
	7	1	**155-2251**	1	PLATE	
	8	1	**6V-3965**	1	FITTING (QUICK DISCONNECT)	
	9	1	*162-0177*	2	PLUG AS	
					(EACH INCLUDES)	
		1	**3J-1907**	1	SEAL-O-RING	
		1	**9S-8004**	1	PLUG	
	10	1	**030-4605**	1	SEAL-O-RING	
	11	1	**146-3728**	1	WASHER-SPRING	
	12	1	**121-2051**	1	SPRING	
	13	1	**177-1405**	1	SPRING	
	14	1	**1P-3709**	1	SEAL-RECTANGULAR	
	15	1	**2D-6648**	1	RING-RETAINING	
	16	1	**3C-8388**	2	PIN-ROLL	
	17	1	**6K-0806**	1	STRAP-CABLE	
	18	1	**5H-6005**	2	SEAL-O-RING	
M	19	1	**8T-3998**	4	BOLT (M4X0.7X12-MM)	
	20	1	**6V-0852**	1	CAP-DUST	

M-METRIC PART

217-6719 ACTUATOR GP-PILOT CONTROL *(contd.)* i02531192

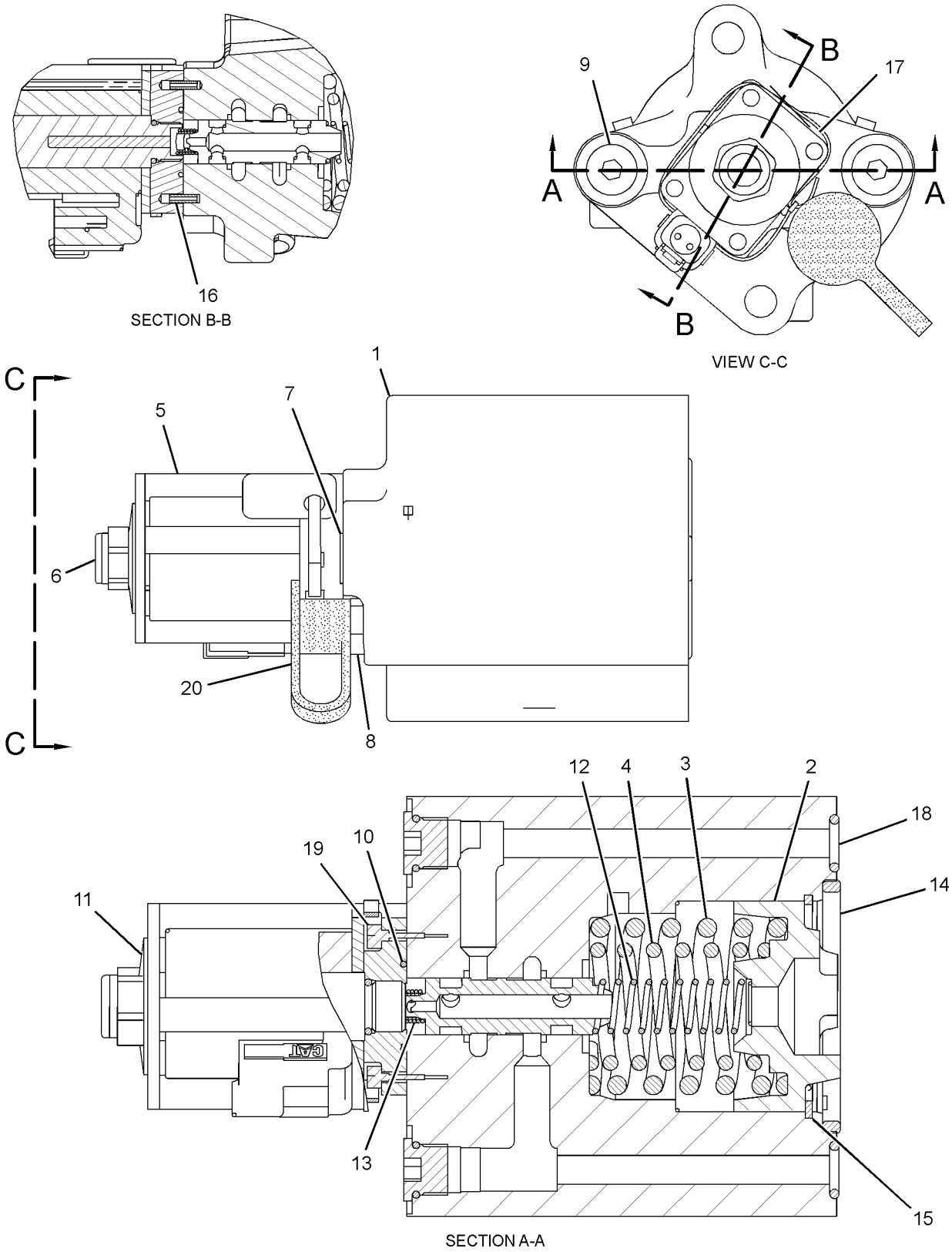

GRAPHIC #1 **<END>** g01275553

217-6719 ACTUATOR GP-PILOT CONTROL–

PROPORTIONAL SOLENOID–REGENERATION VALVE

S/N: BXY2983-UP

PART OF 222-4436, 291-8508, 318-2925 VALVE GP-CONTROL, 212-8712, 212-8746 VALVE GP-MAIN CONTROL, 273-2130 VALVE GP-REGENERATION AN ATTACHMENT

SMCS-5078 **i03790049**

NOTE	REF NO	GRAPHIC REF	PART NUMBER	QTY	PART NAME 1 2 3 4 5 6 (PRODUCT LEVEL)	SEE PAGE
	1	1	**118-5083**	1	HOUSING	
	2	1	**118-5085**	1	RETAINER	
	3	1	**118-5086**	1	SPRING	
	4	1	**118-5087**	1	SPRING	
C	5	1	**326-5212**	1	COIL AS	
C	6	1	**316-1438**	1	CARTRIDGE AS	
	7	1	**155-2251**	1	PLATE	
C	8	1	*164-5567*	1	COUPLER AS-QUICK DISCONNECT	
		1	**6V-3965**	1	FITTING (QUICK DISCONNECT)	
		1	**214-7568**	1	SEAL-O-RING	
	9	1	*162-0177*	2	PLUG AS	
					(EACH INCLUDES)	
		1	**3J-1907**	1	SEAL-O-RING	
		1	**9S-8004**	1	PLUG	
	10	1	**030-4605**	1	SEAL-O-RING	
C	11	1	**191-9247**	1	WASHER (19.15X31.65X2.36-MM THK)	
	12	1	**121-2051**	1	SPRING	
	13	1	**177-1405**	1	SPRING	
	14	1	**1P-3709**	1	SEAL-RECTANGULAR	
	15	1	**2D-6648**	1	RING-RETAINING	
	16	1	**3C-8388**	2	PIN-ROLL	
	17	1	**6K-0806**	1	STRAP-CABLE	
	18	1	**5H-6005**	2	SEAL-O-RING	
M	19	1	**8T-3998**	4	BOLT (M4X0.7X12-MM)	
	20	1	**6V-0852**	1	CAP-DUST	
C	21	1	**198-2914**	1	NUT (3/4-32-THD)	

C-CHANGE FROM PREVIOUS TYPE
M-METRIC PART

217-6719 ACTUATOR GP-PILOT CONTROL *(contd.)* i03790049

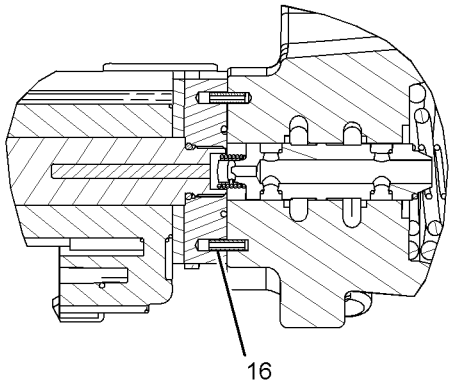

SECTION B-B

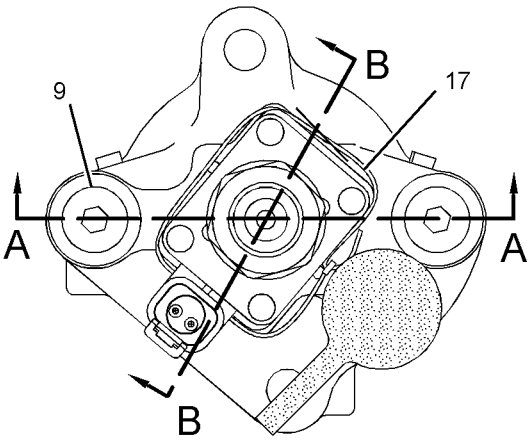

VIEW C-C

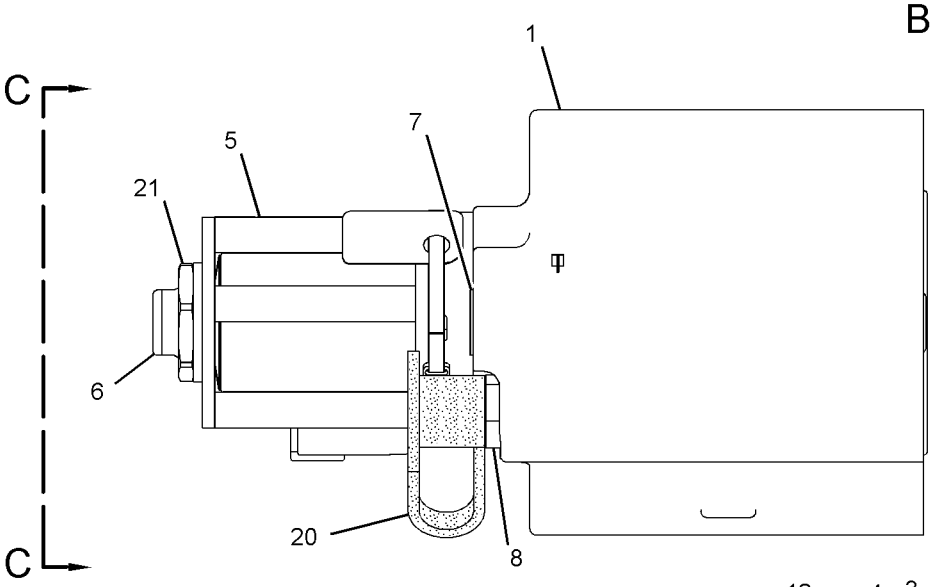

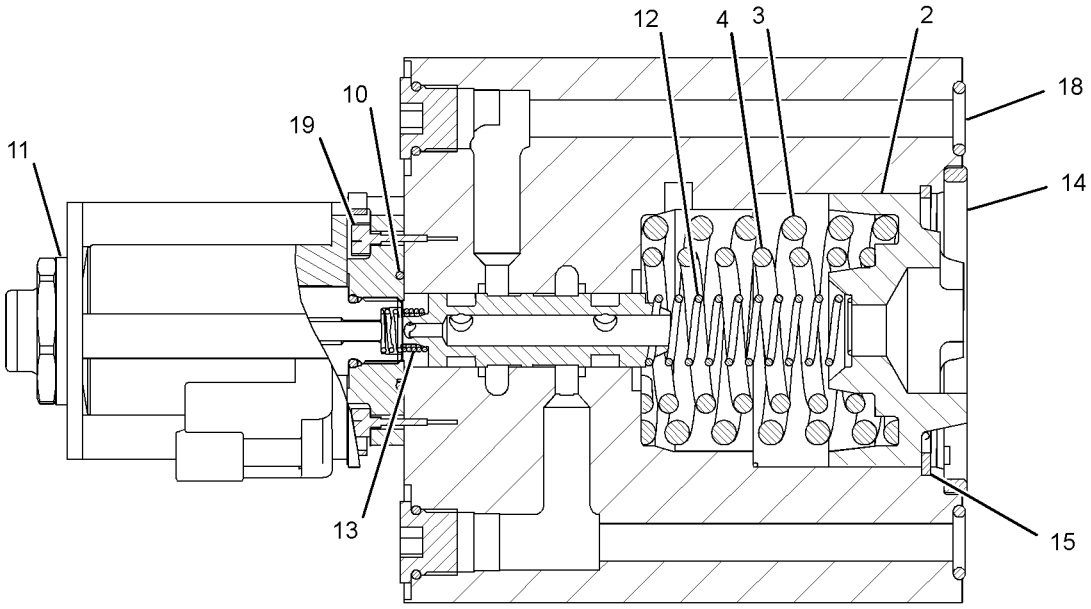

SECTION A-A

GRAPHIC #1 **<END>** g02059854

HYDRAULIC SYSTEM

217-6720 ACTUATOR GP-PILOT CONTROL–

PROPORTIONAL SOLENOID

S/N: BXY1-UP

PART OF 222-4436, 291-8508 VALVE GP-CONTROL, 212-8712, 212-8746, 292-8121, 292-8123 VALVE GP-MAIN CONTROL

AN ATTACHMENT

SMCS-5078 **i03662137**

NOTE	REF NO	GRAPHIC REF	PART NUMBER	QTY	PART NAME 1 2 3 4 5 6 (PRODUCT LEVEL)	SEE PAGE
	1	1	**118-5083**	1	HOUSING	
	2	1	**118-5085**	1	RETAINER	
	3	1	**118-5086**	1	SPRING	
	4	1	**118-5087**	1	SPRING	
	5	1	**326-5212**	1	COIL AS	
	6	1	**316-1438**	1	CARTRIDGE AS	
		1	**214-7568**	2	SEAL-O-RING	
	7	1	**155-2251**	1	PLATE	
	8	1	*164-5567*	1	COUPLER AS-QUICK DISCONNECT	
		1	**6V-3965**	1	FITTING (QUICK DISCONNECT)	
		1	**214-7568**	1	SEAL-O-RING	
	9	1	*162-0177*	2	PLUG AS	
					(EACH INCLUDES)	
		1	**9S-8004**	1	PLUG	
		1	**3J-1907**	1	SEAL-O-RING	
	10	1	**030-4605**	1	SEAL-O-RING	
	11	1	**191-9247**	1	WASHER (19.15X31.65X2.36-MM THK)	
	12	1	**121-2051**	1	SPRING	
	13	1	**177-1405**	1	SPRING	
	14	1	**1P-3709**	1	SEAL-RECTANGULAR	
	15	1	**2D-6648**	1	RING-RETAINING	
	16	1	**3C-8388**	2	PIN-ROLL	
	18	1	**5H-6005**	2	SEAL-O-RING	
M	19	1	**8T-3998**	4	BOLT (M4X0.7X12-MM)	
	20	1	**6V-0852**	1	CAP-DUST	
	21	1	**6K-0806**	1	STRAP-CABLE	
	22	1	**198-2914**	1	NUT (3/4-32-THD)	
F			**1H-5728**	1	SEAL-O-RING	
					PARTS SHOWN IN GRAPHIC(S) WITHOUT A REFERENCE NUMBER ARE NOT SERVICED SEPARATELY	

F-NOT SHOWN
M-METRIC PART

217-6720 ACTUATOR GP-PILOT CONTROL *(contd.)* i03662137

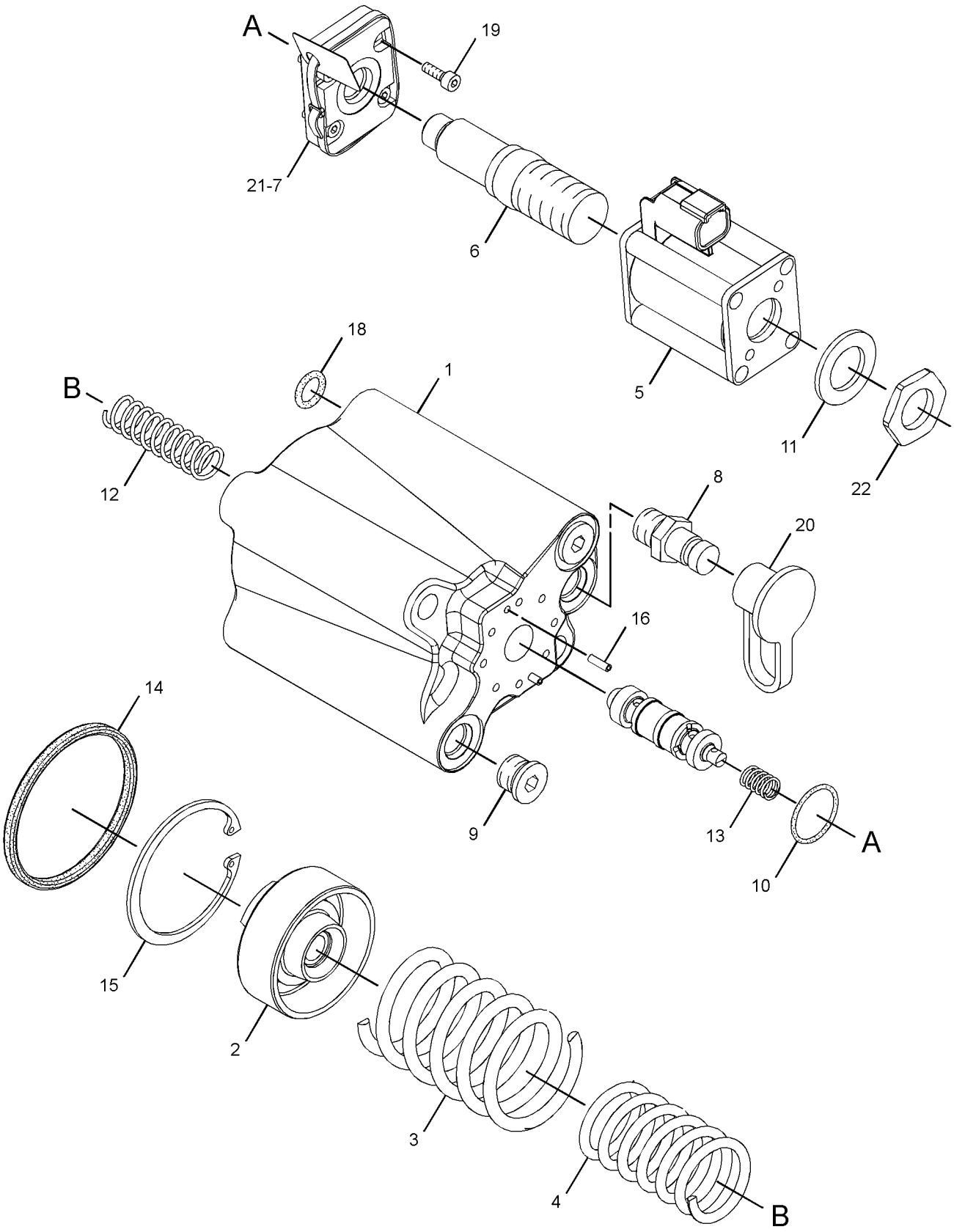

GRAPHIC #1 **<END>** g01875120

HYDRAULIC SYSTEM

254-6063 CONTROL & LINES GP-RIDE

S/N: BXY1-2935
PART OF 254-6062 CONTROL AR-RIDE
AN ATTACHMENT

SMCS-5004, 5057 **i02911199**

NOTE	REF NO	GRAPHIC REF	PART NUMBER	QTY	PART NAME 1 2 3 4 5 6 (PRODUCT LEVEL)	SEE PAGE
	1	2	**9X-6772**	1	STRAP-CABLE	
	2	2	**124-1718**	1	SLEEVE	
	3	2	**130-5300**	2	CLIP	
Y	4	2	**141-1481**	1	VALVE GP-SHUTTLE	1656
I	5	2	**299-6993**	1	HOSE AS	
I	6	2	**112-6150**	1	HOSE AS	
	7	2	**189-7787**	1	MANIFOLD	
	8	2	**189-7788**	1	MANIFOLD	
	9	1	**276-3607**	1	TUBE AS	
	10	1	**189-7895**	1	BRACKET	
	11	2	**189-7897**	1	MANIFOLD	
	12	1	**198-8871**	1	TUBE AS	
	14	2	**207-1810**	1	VALVE GP-CHECK (RIDE CONTROL)	
I	15	2	**246-2828**	1	HOSE AS	
I	16	2	**219-5098**	1	HOSE AS	
I	17	2	**219-5120**	1	HOSE AS	
	18	2	**220-1645**	1	TUBE AS	
	19	1	**220-1646**	1	TUBE AS	
I	20	2	**220-1650**	1	HOSE AS	
	21	2	**220-1657**	1	BRACKET AS	
	22	2	**220-1659**	1	BRACKET AS	
	23	2	**221-0130**	2	BRACKET AS	
I	24	1	**221-0134**	1	HOSE AS	
I	25	2	**221-0135**	1	HOSE AS	
	26	2	**221-5377**	1	HARNESS AS-RIDE CONTROL	
		2	**102-8802**	1	KIT-RECEPTACLE (2-PIN)	
					(INCLUDES RECEPTACLE AS & WEDGE)	
		2	**155-2270**	1	KIT-CONNECTING PLUG (2-PIN)	
					(INCLUDES PLUG AS & WEDGE)	
	27	2	**227-3275**	1	BRACKET AS	
	28	1	**227-3276**	1	BRACKET AS	
I	29	1	**227-3281**	1	HOSE AS	
	30	2	**228-7024**	2	U-BOLT	
	31	2	**246-0561**	1	PLATE	
Y	32	1	*259-4694*	2	ACCUMULATOR GP-RIDE CONTROL (CHARGED)	1397
Y	33	2	**259-6275**	1	VALVE GP-RIDE CONTROL	1653
I	34	2	**259-7143**	1	HOSE AS	
	35	2	**103-1303**	4	CLAMP-HALF	
	36	1	*148-8335*	2	CONNECTOR AS	
					(EACH INCLUDES)	
		1	**5K-9090**	1	SEAL-O-RING	
		1	**6V-8635**	1	CONNECTOR	
		1	**7M-8485**	1	SEAL-O-RING	
	37	2	*148-8336*	2	CONNECTOR AS	
					(EACH INCLUDES)	
		2	**3J-1907**	1	SEAL-O-RING	
		2	**6V-8397**	1	SEAL-O-RING	
		2	**6V-8636**	1	CONNECTOR	
	38	2	*148-8340*	1	CONNECTOR AS	
		2	**3K-0360**	1	SEAL-O-RING	
		2	**6V-8398**	1	SEAL-O-RING	
		2	**6V-8639**	1	CONNECTOR	
	39	1	*148-8352*	4	ELBOW AS	
					(EACH INCLUDES)	
		1	**5K-9090**	1	SEAL-O-RING	

254-6063 CONTROL & LINES GP-RIDE (contd.) i02911199

NOTE	REF NO	GRAPHIC REF	PART NUMBER	QTY	PART NAME 1 2 3 4 5 6 (PRODUCT LEVEL)	SEE PAGE
		1	**6V-9854**	1	ELBOW	
	40	2	*148-8364*	1	ELBOW AS	
		2	**3K-0360**	1	SEAL-O-RING	
		2	**6V-8398**	1	SEAL-O-RING	
		2	**6V-8625**	1	ELBOW	
	41	2	*148-8370*	1	ELBOW AS	
		2	**6V-8398**	1	SEAL-O-RING	
		2	**6V-9851**	1	ELBOW	
	42	2	*148-8374*	1	ELBOW AS	
		2	**3K-0360**	1	SEAL-O-RING	
		2	**6V-8397**	1	SEAL-O-RING	
		2	**6V-8723**	1	ELBOW	
	43	2	*148-8378*	1	ELBOW AS	
		2	**3J-1907**	1	SEAL-O-RING	
		2	**6V-8397**	1	SEAL-O-RING	
		2	**6V-8724**	1	ELBOW	
	44	2	*148-8415*	1	REDUCER AS	
		2	**6V-8397**	1	SEAL-O-RING	
		2	**6V-8936**	1	REDUCER	
	45	2	*148-8426*	1	TEE AS	
		2	**3K-0360**	1	SEAL-O-RING	
		2	**6V-8397**	1	SEAL-O-RING	
		2	**6V-8398**	1	SEAL-O-RING	
		2	**8T-6696**	1	TEE-O-RING	
	46	1	*148-8428*	1	TEE AS	
		1	**3K-0360**	1	SEAL-O-RING	
		1	**6V-8398**	2	SEAL-O-RING	
		1	**6V-8782**	1	TEE	
	47	2	*148-8444*	1	TEE AS-SWIVEL	
		2	**6V-8398**	2	SEAL-O-RING	
		2	**6V-9837**	1	TEE-SWIVEL	
	48	1	*148-8445*	1	TEE AS	
		1	**5K-9090**	2	SEAL-O-RING	
		1	**6V-9847**	1	TEE-SWIVEL	
	49	2	*150-4043*	3	CONNECTOR AS	
					(EACH INCLUDES)	
		2	**3J-1907**	1	SEAL-O-RING	
		2	**6V-8398**	1	SEAL-O-RING	
		2	**6V-9873**	1	CONNECTOR	
	50	2	**1P-3704**	1	SEAL-RECTANGULAR	
	51	2	**1P-3705**	5	SEAL-RECTANGULAR	
	52	1,2	**1P-3706**	3	SEAL-RECTANGULAR	
	53	2	**1P-5767**	2	FLANGE-HALF	
	54	2	**4J-0520**	2	SEAL-O-RING	
	55	1,2	**5P-7464**	3	CLIP (SLOT)	
	56	1,2	**5P-7465**	3	CLIP (TAB)	
	57	1,2	**5P-7468**	3	CLIP (SLOT)	
	58	1,2	**5P-7469**	3	CLIP (TAB)	
	59	2	**5P-8077**	8	FLANGE-HALF	
	60	1,2	**5P-8444**	2	GROMMET	
	61	2	**5P-9085**	2	CLIP	
	62	2	**5P-9299**	1	CLIP	
	63	1,2	**6V-1249**	3	GROMMET	
	64	1,2	**6V-8398**	2	SEAL-O-RING	
	65	2	**6V-9830**	1	CAP AS	
	66	2	**7X-0515**	6	WASHER-HARD (17X35X5-MM THK)	
M	67	2	**7X-2534**	2	BOLT (M6X1X50-MM)	
M	68	1,2	**7X-2553**	6	BOLT (M16X2X40-MM)	
M	69	2	**7X-2556**	4	BOLT (M16X2X100-MM)	

254-6063 CONTROL & LINES GP-RIDE *(contd.)* i02911199

NOTE	REF NO	GRAPHIC REF	PART NUMBER	QTY	PART NAME 1 2 3 4 5 6 (PRODUCT LEVEL)	SEE PAGE
	70	2	**8C-3206**	2	FLANGE-HALF	
M	71	2	**8T-0389**	4	LOCKNUT (M10X1.5-THD)	
	72	1,2	**8T-4121**	18	WASHER-HARD (11X21X2.5-MM THK)	
M	73	1,2	**8T-4136**	8	BOLT (M10X1.5X25-MM)	
M	74	2	**8T-4137**	1	BOLT (M10X1.5X20-MM)	
M	75	1,2	**8T-4139**	6	BOLT (M12X1.75X30-MM)	
M	76	2	**8T-4140**	15	BOLT (M16X2X60-MM)	
M	77	2	**8T-4172**	1	BOLT (M10X1.5X80-MM)	
M	78	1	**8T-4173**	8	BOLT (M16X2X110-MM)	
M	79	2	**8T-4176**	4	BOLT (M12X1.75X90-MM)	
	81	1,2	**8T-4223**	12	WASHER-HARD (13.5X25.5X3-MM THK)	
M	82	1,2	**8T-4779**	6	BOLT (M16X2X35-MM)	
M	83	2	**8T-4956**	2	BOLT (M12X1.75X35-MM)	
M	84	2	**8T-5005**	4	BOLT (M10X1.5X70-MM)	
	85	2	**8T-7087**	1	GROMMET	
	86	2	**9X-8256**	2	WASHER (6.6X12X2-MM THK)	
	87	1,2	**9X-8257**	36	WASHER (17.5X30X3.5-MM THK)	

I-REFER TO HYDRAULIC INFORMATION SYSTEM
M-METRIC PART
Y-SEPARATE ILLUSTRATION

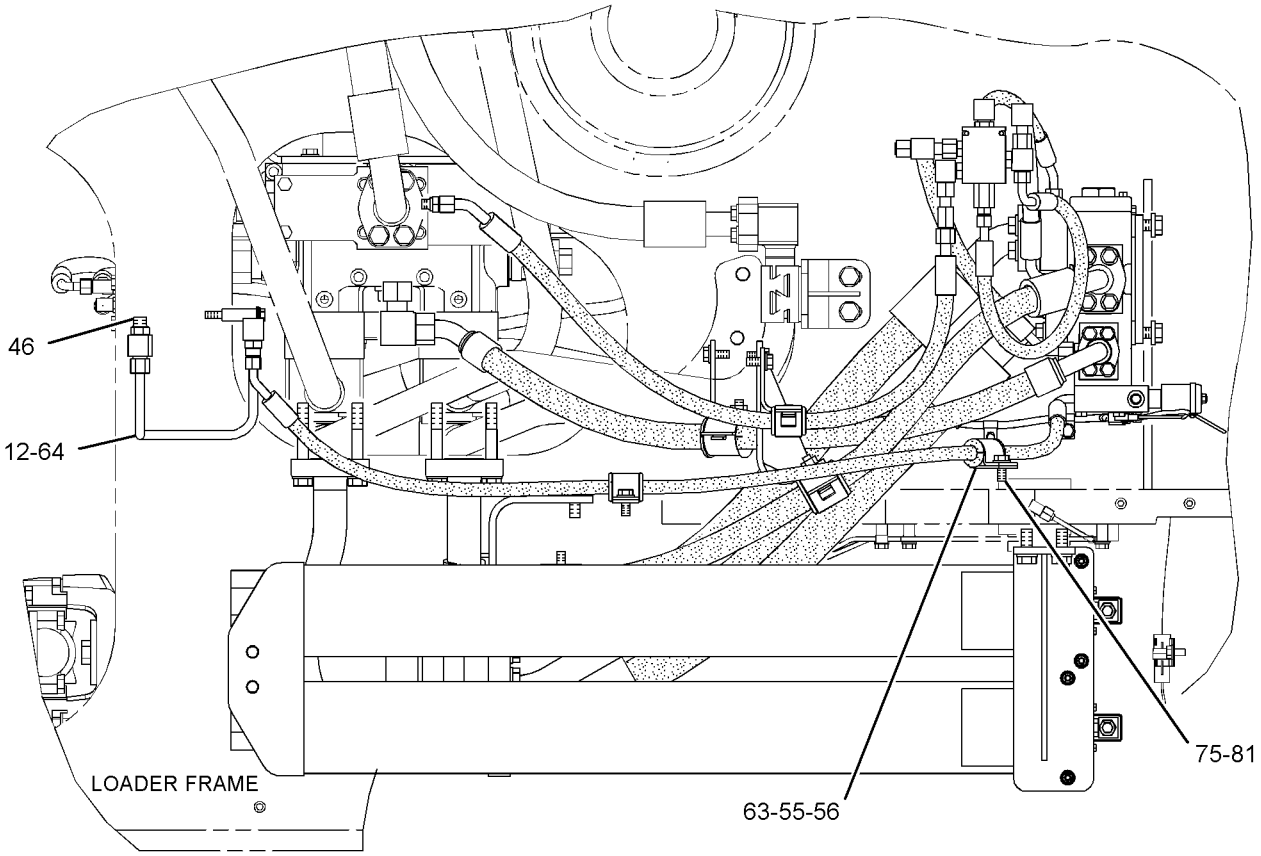

RIGHT SIDE VIEW

REFER TO ALL ILLUSTRATIONS OF THIS GROUP FOR AUXILIARY VIEWS

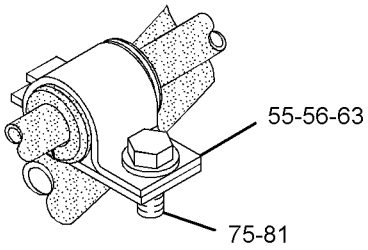

VIEW OF AREA B

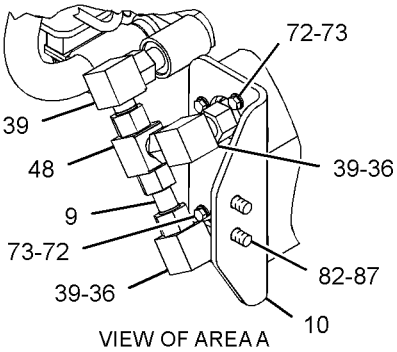

VIEW OF AREA A

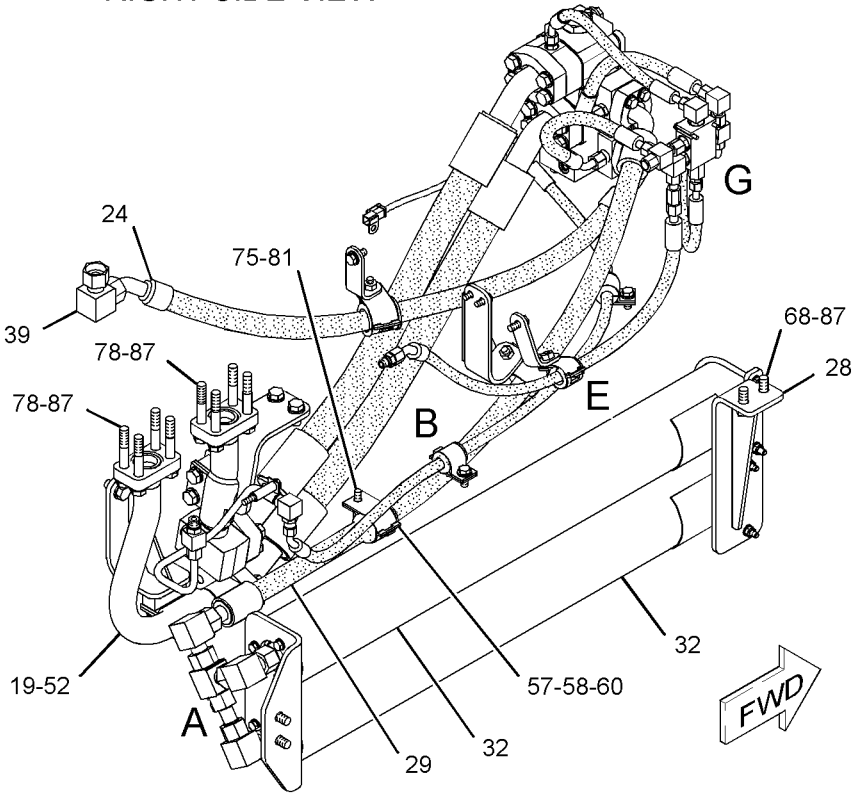

GRAPHIC #1

g01456091

254-6063 CONTROL & LINES GP-RIDE *(contd.)* i02911199

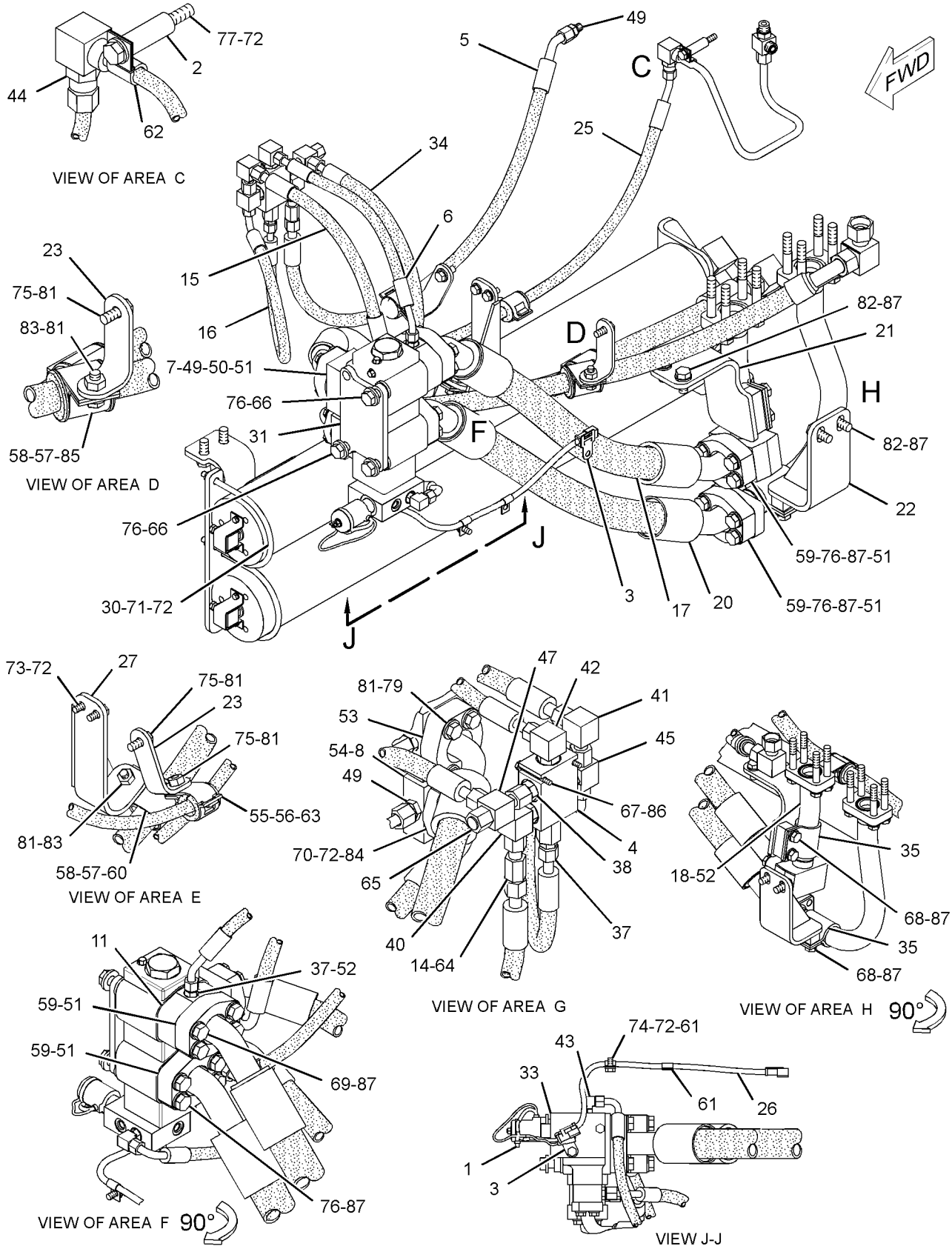

GRAPHIC #2 **<END>** g01456093

HYDRAULIC SYSTEM

254-6062 CONTROL AR-RIDE

S/N: BXY1-UP
AN ATTACHMENT

SMCS-5004 **i02224631**

NOTE	PART NUMBER	QTY	PART NAME 1 2 3 4 5 6 (PRODUCT LEVEL)	SEE PAGE
Y	*254-6063*	1	CONTROL & LINES GP-RIDE	1405
Y	*219-5066*	1	GUARD GP-BOTTOM	937
Y	*219-4977*	1	HARDWARE GP-REAR FRAME	961
Y	*261-0416*	1	SWITCH GP-RIDE CONTROL	462

Y-SEPARATE ILLUSTRATION

<END>

227-3317 CONVERSION GP-HYDRAULIC LINES

S/N: BXY1900-UP
CUSTOM
PART OF 2Q-8722, 2Q-8733, 2Q-8744 STEEL MILL AR
AN ATTACHMENT

SMCS-5057 **i02887174**

NOTE	PART NUMBER	QTY	PART NAME 1 2 3 4 5 6 (PRODUCT LEVEL)	SEE PAGE
Y	*304-8946*	1	INSULATION GP-HEAT	977
JY	*189-7253*	1	LINES GP-AXLE OIL COOLER	738
Y	*189-7250*	1	LINES GP-HYDRAULIC	1462
LY	*189-7259*	1	LINES GP-HYDRAULIC (MAIN CONTROL VALVE)	1463
Y	*189-7257*	1	LINES GP-LIFT CYLINDER	1504
Y	*189-7255*	1	LINES GP-POWER TRAIN OIL	776
Y	*189-7252*	1	LINES GP-SERVICE BRAKE	1318
Y	*222-3756*	1	LINES GP-SERVICE BRAKE	1318
Y	*310-3495*	1	LINES GP-STEERING	1358
Y	*219-5023*	1	LINES GP-STEERING NEUTRALIZER	1369
Y	*189-7254*	1	LINES GP-TILT CYLINDER	1517

J-FOR USE WITH COOLER AR-AXLE OIL
L-FOR USE WITH HYDRAULIC AR-2 VALVE
Y-SEPARATE ILLUSTRATION

<END>

HYDRAULIC SYSTEM

164-0058 COOLER GP-HYDRAULIC OIL

S/N: BXY1-UP

PART OF 225-5432, 284-2735 CHASSIS AR

SMCS-1374 **i01646246**

NOTE	REF NO	GRAPHIC REF	PART NUMBER	QTY	PART NAME 1 2 3 4 5 6 (PRODUCT LEVEL)	SEE PAGE
	1	1	**1M-6298**	4	CLAMP-MOUNTING	
	2	1	**1P-5411**	2	SLEEVE	
	3	1	**1P-5412**	4	BUSHING-TERMINAL	
	4	1	**3H-8726**	2	MOUNT AS	
	5	1	**4S-8875**	2	SPACER (13.5X38X22.6-MM THK)	
	6	1	**204-2640**	1	CORE AS-HYDRAULIC OIL COOLER	
	7	1	**7X-0590**	2	WASHER-HARD (13.5X44.5X6-MM THK)	
M	8	1	**7X-2549**	2	BOLT (M12X1.75X100-MM)	
	9	1	**8T-4121**	8	WASHER-HARD (11X21X2.5-MM THK)	
M	10	1	**8T-4172**	6	BOLT (M10X1.5X80-MM)	
M	11	1	**8T-4194**	2	BOLT (M12X1.75X50-MM)	
	12	1	**8T-4223**	4	WASHER-HARD (13.5X25.5X3-MM THK)	
M	13	1	**8T-4244**	2	NUT (M12X1.75-THD)	
I	14	1	**204-0341**	1	HOSE AS	
	15	1	*148-8327*	1	CONNECTOR AS	
		1	**3D-2824**	1	SEAL-O-RING	
		1	**6V-8637**	1	CONNECTOR	
		1	**6V-9746**	1	SEAL-O-RING	
	16	1	*148-8347*	1	ELBOW AS	
		1	**3D-2824**	1	SEAL-O-RING	
		1	**6V-9007**	1	ELBOW	
		1	**6V-9746**	1	SEAL-O-RING	
	17	1	**4S-4455**	2	CLIP	
M	18	1	**8T-4137**	2	BOLT (M10X1.5X20-MM)	

I-REFER TO HYDRAULIC INFORMATION SYSTEM
M-METRIC PART

164-0058 **COOLER GP-HYDRAULIC OIL** *(contd.)* **i01646246**

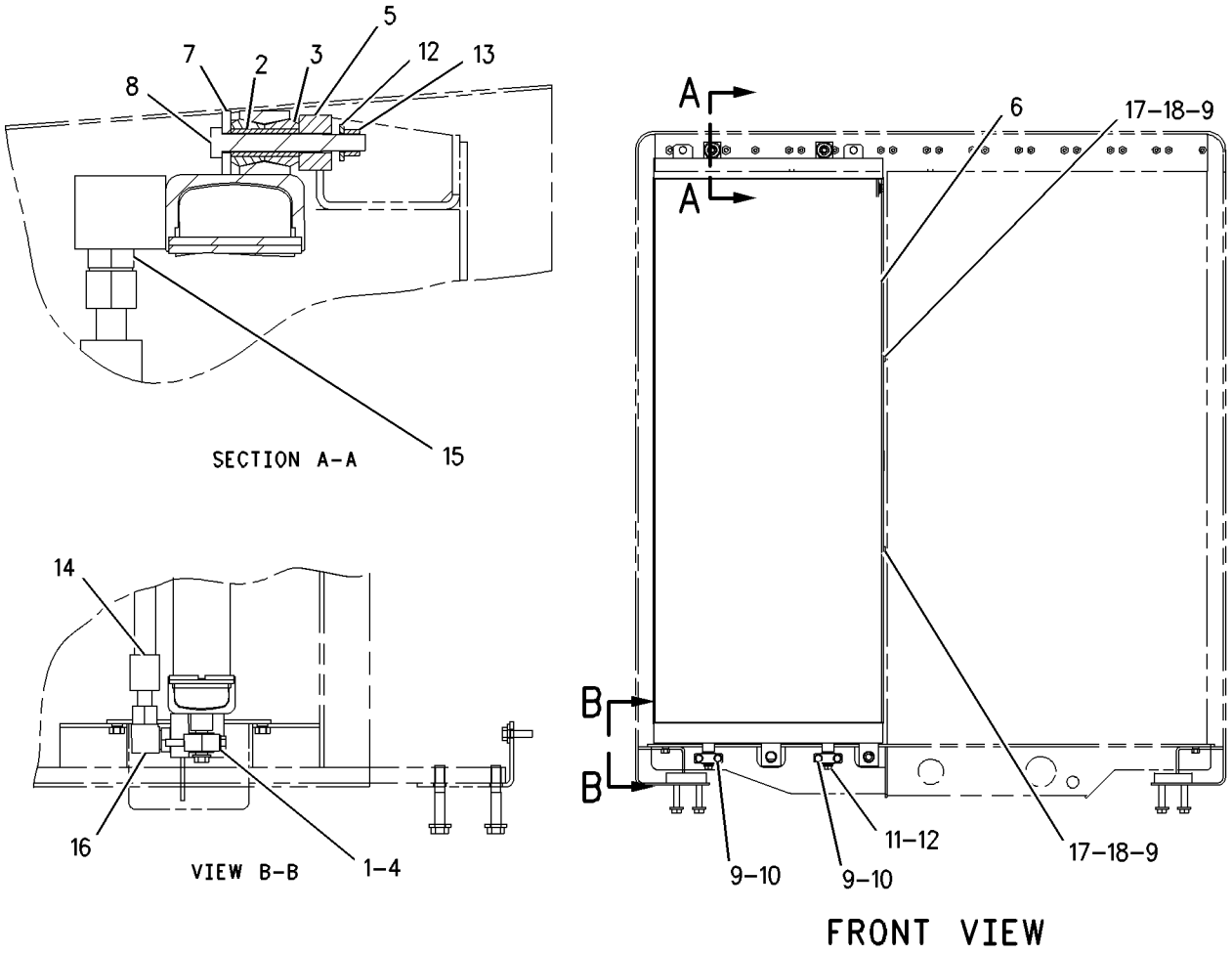

GRAPHIC #1 **<END>** g00814585

HYDRAULIC SYSTEM

230-7914 CYLINDER & SENSOR GP-LIFT—RH

S/N: BXY1900-2915
220-MM BORE X 911-MM STROKE
PART OF 261-1516 CYLINDER GP-LIFT & TILT
AN ATTACHMENT

SMCS-5102, 5736 **i03644701**

NOTE	REF NO	GRAPHIC REF	PART NUMBER	QTY	PART NAME 1 2 3 4 5 6 (PRODUCT LEVEL)	SEE PAGE
	1	1	**8T-8737**	1	PLUG-SEAL	
	2	1	**102-2244**	1	GROMMET	
	3	1	**102-8804**	1	KIT-RECEPTACLE (4-PIN)	
					(INCLUDES RECEPTACLE AS & WEDGE)	
	4	1	**173-8614**	1	HEAD	
	5	1	**212-0907**	1	PLATE-CONNECTOR	
	6	1	**214-1639**	1	MAGNET	
	7	1	**217-5073**	1	CYLINDER AS-LIFT	
		1	*217-5074*	1	CAP AS	
		1	**095-0879**	1	PIN-SPRING	
		1	**152-3750**	1	BEARING	
	8	1	**217-8763**	1	COVER-PROTECTION	
	9	1	**230-0877**	1	PISTON	
	10	1	**230-9985**	1	ROD AS	
		1	**152-3750**	1	BEARING	
	11	1	**243-3177**	1	RETAINER	
	12	1	**217-6567**	1	SENSOR GP-POSITION (LIFT)	
E		1	**9X-1386**		SLEEVE (23-CM)	
		1	**102-2244**	1	GROMMET	
		1	**9X-3401**	3	PIN-CONNECTOR (16-GA TO 18-GA)	
					—OR—	
		1	**126-1767**	3	PIN-CONNECTOR (14-GA)	
		1	**215-1942**	1	RING-BACKUP	
		1	**217-4521**	1	SEAL-O-RING	
	13	1	**108-0122**	1	RING-BACKUP	
	14	1	**167-2222**	1	SEAL AS-BUFFER	
	15	1	**167-2339**	1	SEAL-U-CUP	
	16	1	**188-2199**	1	SEAL-O-RING	
	17	1	**215-1942**	1	RING-BACKUP	
	18	1	**219-1438**	1	SEAL AS	
	19	1	**225-3290**	1	SEAL-WIPER	
	20	1	**3V-2431**	2	WASHER (10.2X16X2-MM THK)	
	21	1	**4S-5565**	2	BOLT (3/8-16X0.875-IN)	
	22	1	**6E-0496**	1	RING-WEAR	
	23	1	**6V-8237**	11	WASHER (26X44X4-MM THK)	
M	24	1	**8T-0668**	11	BOLT (M24X3X110-MM)	
	25	1	**8T-3331**	1	RING-WEAR	
	26	1	**8T-5070**	1	SETSCREW-SOCKET (3/8-16X0.5-IN)	
	27	1	**9M-5894**	1	SEAL-O-RING	
	28	1	**9X-6017**	1	LOCKNUT	
E	29	1	**9X-1386**		SLEEVE (9-CM)	
E	29A	1	**9X-1386**		SLEEVE (14-CM)	

E-ORDER BY THE CENTIMETER
M-METRIC PART

230-7914 CYLINDER & SENSOR GP-LIFT *(contd.)* i03644701

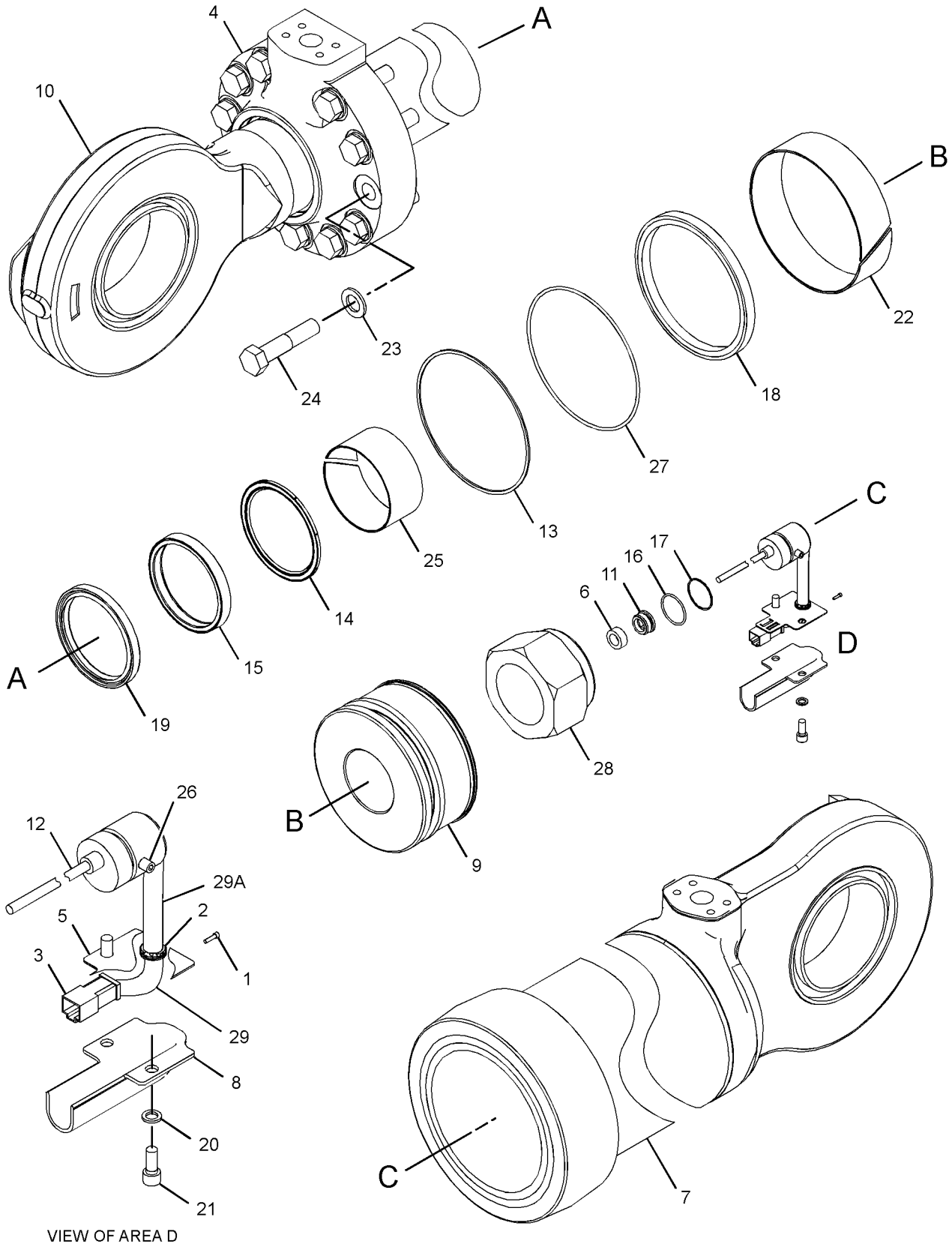

GRAPHIC #1 **<END>** g02062673

HYDRAULIC SYSTEM

230-7914 CYLINDER & SENSOR GP-LIFT–RH

S/N: BXY2916-UP
220-MM BORE X 911-MM STROKE
PART OF 261-1516 CYLINDER GP-LIFT & TILT
AN ATTACHMENT

SMCS-5102, 5736 **i03643868**

NOTE	REF NO	GRAPHIC REF	PART NUMBER	QTY	PART NAME 1 2 3 4 5 6 (PRODUCT LEVEL)	SEE PAGE
	1	1	**8T-8737**	1	PLUG-SEAL	
	2	1	**102-2244**	1	GROMMET	
	3	1	**102-8804**	1	KIT-RECEPTACLE (4-PIN)	
					(INCLUDES RECEPTACLE AS & WEDGE)	
	4	1	**173-8614**	1	HEAD	
C	5	1	**212-0907**	1	PLATE-CONNECTOR	
	6	1	**214-1639**	1	MAGNET	
	7	1	**217-5073**	1	CYLINDER AS-LIFT	
		1	*217-5074*	1	CAP AS	
		1	**095-0879**	1	PIN-SPRING	
		1	**152-3750**	1	BEARING	
	8	1	**217-8763**	1	COVER-PROTECTION	
	9	1	**230-0877**	1	PISTON	
	10	1	**230-9985**	1	ROD AS	
		1	**152-3750**	1	BEARING	
	11	1	**243-3177**	1	RETAINER	
C	12	1	**342-5986**	1	SENSOR GP-POSITION (LIFT)	
E		1	**9X-1386**		SLEEVE (23-CM)	
		1	**102-2244**	1	GROMMET	
		1	**9X-3401**	3	PIN-CONNECTOR (16-GA TO 18-GA)	
					–OR–	
		1	**126-1767**	3	PIN-CONNECTOR (14-GA)	
		1	**215-1942**	1	RING-BACKUP	
		1	**217-4521**	1	SEAL-O-RING	
	13	1	**108-0122**	1	RING-BACKUP	
	14	1	**167-2222**	1	SEAL AS-BUFFER	
	15	1	**167-2339**	1	SEAL-U-CUP	
	16	1	**188-2199**	1	SEAL-O-RING	
	17	1	**215-1942**	1	RING-BACKUP	
	18	1	**219-1438**	1	SEAL AS	
	19	1	**225-3290**	1	SEAL-WIPER	
	20	1	**3V-2431**	2	WASHER (10.2X16X2-MM THK)	
	21	1	**4S-5565**	2	BOLT (3/8-16X0.875-IN)	
	22	1	**6E-0496**	1	RING-WEAR	
	23	1	**6V-8237**	11	WASHER (26X44X4-MM THK)	
M	24	1	**8T-0668**	11	BOLT (M24X3X110-MM)	
	25	1	**8T-3331**	1	RING-WEAR	
	26	1	**8T-5070**	1	SETSCREW-SOCKET (3/8-16X0.5-IN)	
	27	1	**9M-5894**	1	SEAL-O-RING	
	28	1	**9X-6017**	1	LOCKNUT	
E	29	1	**9X-1386**		SLEEVE (9-CM)	
E	29A	1	**9X-1386**		SLEEVE (14-CM)	

C-CHANGE FROM PREVIOUS TYPE
E-ORDER BY THE CENTIMETER
M-METRIC PART

230-7914 CYLINDER & SENSOR GP-LIFT *(contd.)* i03643868

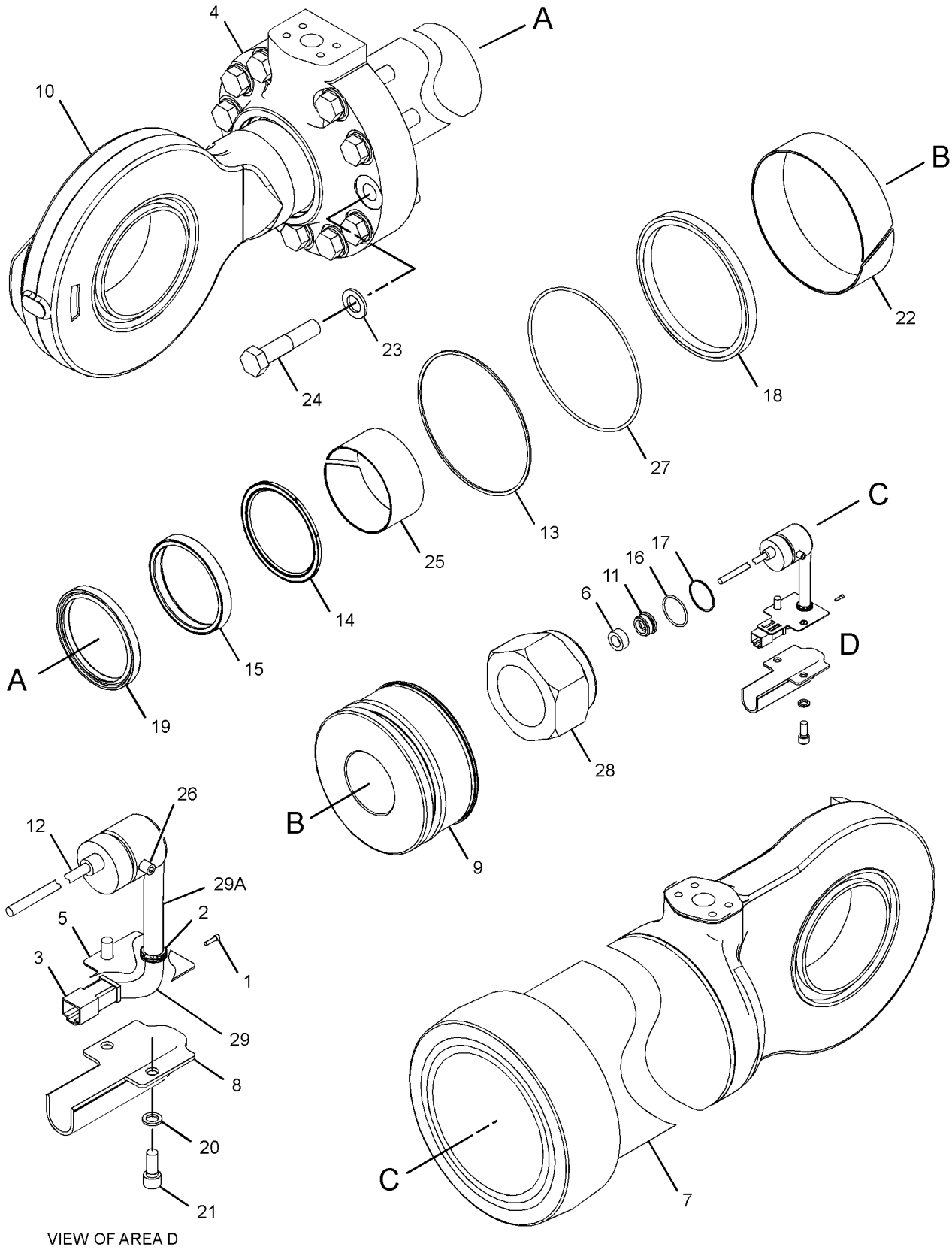

GRAPHIC #1 **<END>** g02062673

HYDRAULIC SYSTEM

230-7913 CYLINDER & SENSOR GP-TILT

S/N: BXY1900-2915

PART OF 261-1516 CYLINDER GP-LIFT & TILT

AN ATTACHMENT

SMCS-5104, 5736 **i02782488**

NOTE	REF NO	GRAPHIC REF	PART NUMBER	QTY	PART NAME 1 2 3 4 5 6 (PRODUCT LEVEL)	SEE PAGE
	1	1	**102-2244**	1	GROMMET	
	2	1	**212-0907**	1	PLATE-CONNECTOR	
	3	1	**214-1639**	1	MAGNET	
	4	1	**188-2199**	1	SEAL-O-RING	
	5	1	**217-6566**	1	SENSOR GP-POSITION (TILT)	
		1	**144-1636**	3	PIN-CONNECTOR (14-GA TO 18-GA)	
	6	1	**217-8763**	1	COVER-PROTECTION	
	7	1	**243-3177**	1	RETAINER	
	8	1	**218-9733**	1	CYLINDER AS-TILT	
		1	**095-0879**	1	PIN-SPRING	
	8A	1	**152-3739**	2	BEARING-SLEEVE	
	9	1	**230-0877**	1	PISTON	
	10	1	**230-0915**	1	ROD AS	
	10A	1	**152-3739**	2	BEARING-SLEEVE	
	11	1	**231-1960**	1	HEAD	
	12	1	**102-8804**	1	KIT-RECEPTACLE (4-PIN)	
					(INCLUDES RECEPTACLE AS AND WEDGE)	
	13	1	**108-0122**	1	RING-BACKUP	
	14	1	**167-2220**	1	SEAL AS-BUFFER	
	15	1	**167-2336**	1	SEAL-U-CUP	
	16	1	**215-1942**	1	RING-BACKUP	
	17	1	**219-1438**	1	SEAL AS	
	18	1	**225-3289**	1	SEAL-WIPER	
	19	1	**3V-2431**	2	WASHER (10.2X16X2-MM THK)	
	20	1	**4S-5565**	2	BOLT (3/8-16X0.875-IN)	
	21	1	**6E-0496**	1	RING-WEAR	
	22	1	**6V-8237**	12	WASHER (26X44X4-MM THK)	
M	23	1	**8T-0666**	10	BOLT (M24X3X90-MM)	
M	24	1	**8T-0669**	2	BOLT (M24X3X130-MM)	
	25	1	**8T-5070**	1	SETSCREW-SOCKET (3/8-16X0.5-IN)	
	26	1	**8T-8737**	1	PLUG-SEAL	
	27	1	**9M-5894**	1	SEAL-O-RING	
	28	1	**9X-3579**	1	RING-WEAR	
	29	1	**9X-6017**	1	LOCKNUT	
E	30	1	**9X-1386**		SLEEVE (14-CM)	
E	30A	1	**9X-1386**		SLEEVE (9-CM)	

E-ORDER BY THE CENTIMETER
M-METRIC PART

230-7913 CYLINDER & SENSOR GP-TILT *(contd.)* i02782488

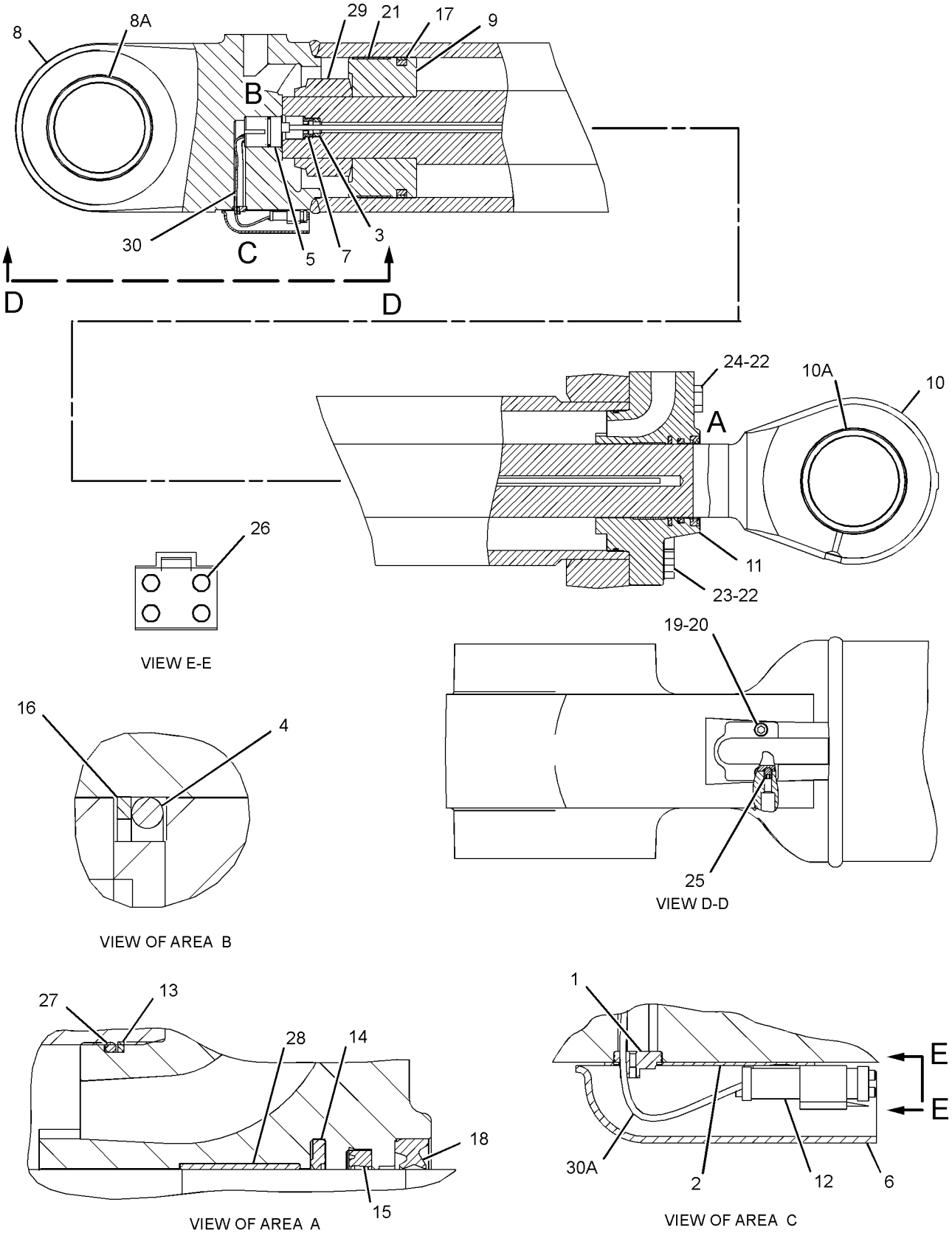

GRAPHIC #1 **<END>** g01432442

HYDRAULIC SYSTEM

230-7913 CYLINDER & SENSOR GP-TILT

S/N: BXY2916-UP

PART OF 261-1516 CYLINDER GP-LIFT & TILT

AN ATTACHMENT

SMCS-5104, 5736 **i03618607**

NOTE	REF NO	GRAPHIC REF	PART NUMBER	QTY	PART NAME 1 2 3 4 5 6 (PRODUCT LEVEL)	SEE PAGE
	1	1	**102-2244**	1	GROMMET	
	2	1	**212-0907**	1	PLATE-CONNECTOR	
	3	1	**214-1639**	1	MAGNET	
	4	1	**188-2199**	1	SEAL-O-RING	
C	5	1	**342-5985**	1	SENSOR GP-POSITION (TILT)	
		1	**144-1636**	3	PIN-CONNECTOR (14-GA TO 18-GA)	
	6	1	**217-8763**	1	COVER-PROTECTION	
	7	1	**243-3177**	1	RETAINER	
	8	1	**218-9733**	1	CYLINDER AS-TILT	
		1	**095-0879**	1	PIN-SPRING	
	8A	1	**152-3739**	2	BEARING-SLEEVE	
	9	1	**230-0877**	1	PISTON	
	10	1	**230-0915**	1	ROD AS	
	10A	1	**152-3739**	2	BEARING-SLEEVE	
	11	1	**231-1960**	1	HEAD	
	12	1	**102-8804**	1	KIT-RECEPTACLE (4-PIN)	
					(INCLUDES RECEPTACLE AS AND WEDGE)	
	13	1	**108-0122**	1	RING-BACKUP	
	14	1	**167-2220**	1	SEAL AS-BUFFER	
	15	1	**167-2336**	1	SEAL-U-CUP	
	16	1	**215-1942**	1	RING-BACKUP	
	17	1	**219-1438**	1	SEAL AS	
	18	1	**225-3289**	1	SEAL-WIPER	
	19	1	**3V-2431**	2	WASHER (10.2X16X2-MM THK)	
	20	1	**4S-5565**	2	BOLT (3/8-16X0.875-IN)	
	21	1	**6E-0496**	1	RING-WEAR	
	22	1	**6V-8237**	12	WASHER (26X44X4-MM THK)	
M	23	1	**8T-0666**	10	BOLT (M24X3X90-MM)	
M	24	1	**8T-0669**	2	BOLT (M24X3X130-MM)	
	25	1	**8T-5070**	1	SETSCREW-SOCKET (3/8-16X0.5-IN)	
	26	1	**8T-8737**	1	PLUG-SEAL	
	27	1	**9M-5894**	1	SEAL-O-RING	
	28	1	**9X-3579**	1	RING-WEAR	
	29	1	**9X-6017**	1	LOCKNUT	
E	30	1	**9X-1386**		SLEEVE (14-CM)	
E	30A	1	**9X-1386**		SLEEVE (9-CM)	

C-CHANGE FROM PREVIOUS TYPE
E-ORDER BY THE CENTIMETER
M-METRIC PART

230-7913 CYLINDER & SENSOR GP-TILT *(contd.)* i03618607

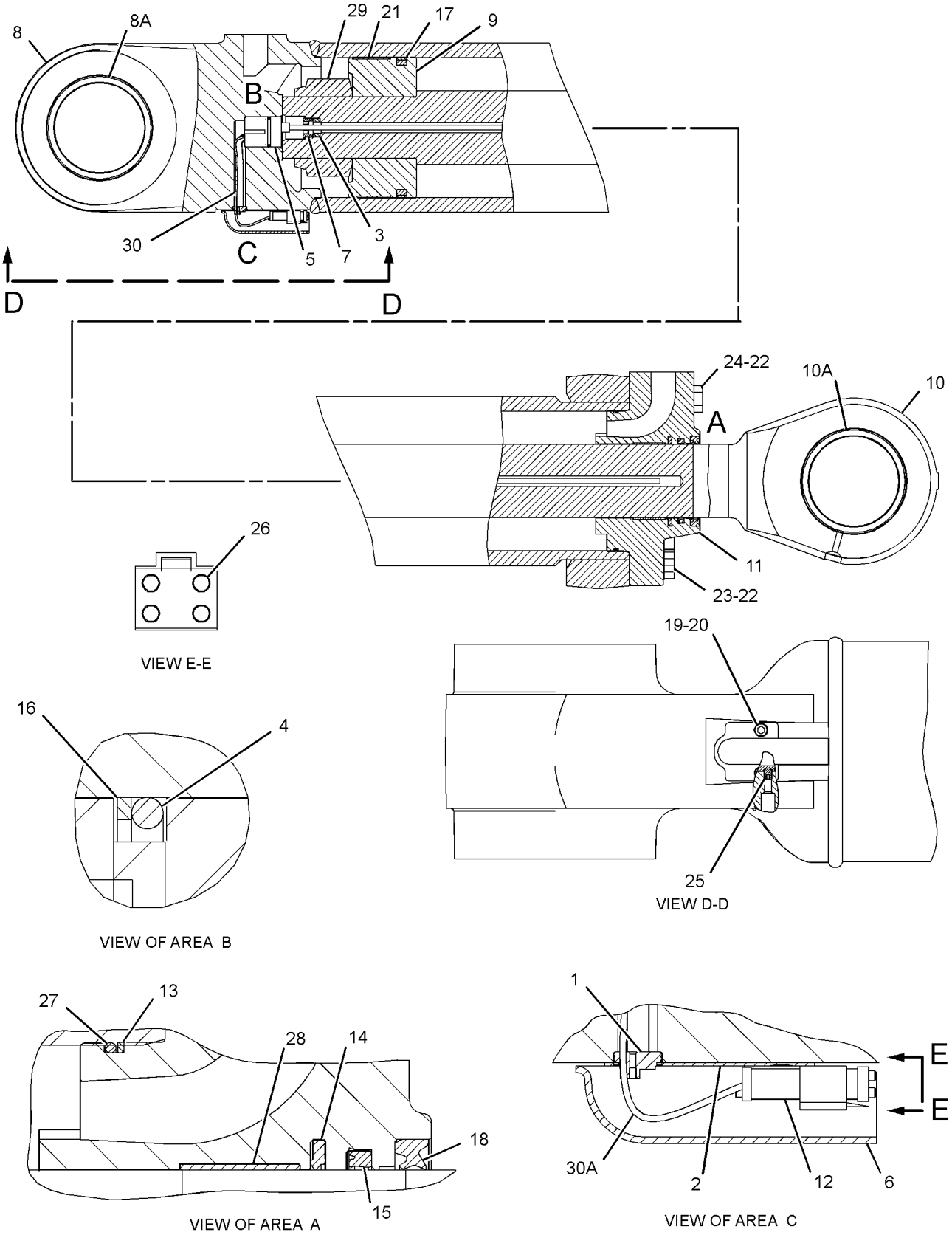

GRAPHIC #1 **<END>** g01432442

HYDRAULIC SYSTEM

194-9203 CYLINDER GP-COUPLER

S/N: BXY1-UP
PART OF 190-0948 COUPLER GP-QUICK
AN ATTACHMENT

SMCS-5133 **i03775890**

NOTE	REF NO	GRAPHIC REF	PART NUMBER	QTY	PART NAME 1 2 3 4 5 6 (PRODUCT LEVEL)	SEE PAGE
	1	1	**194-9194**	1	CYLINDER	
	2	1	**194-9204**	1	VALVE-CHECK	
	3	1	**194-9503**	1	ROD	
	4	1	**194-9504**	1	EYE	
	5	1	**194-9505**	1	BEARING	
	6	1	**194-9506**	2	BEARING	
	7	1	**194-9509**	1	CAP	
	8	1	**194-9508**	1	PISTON	
	9	1	**207-4720**	5	PLUG	
	10	1	**207-4721**	1	PLUG	
					AVAILABLE REPAIR KIT(S):	
			234-1902	1	KIT-SEAL	
					(INCLUDES RINGS AND SEALS)	

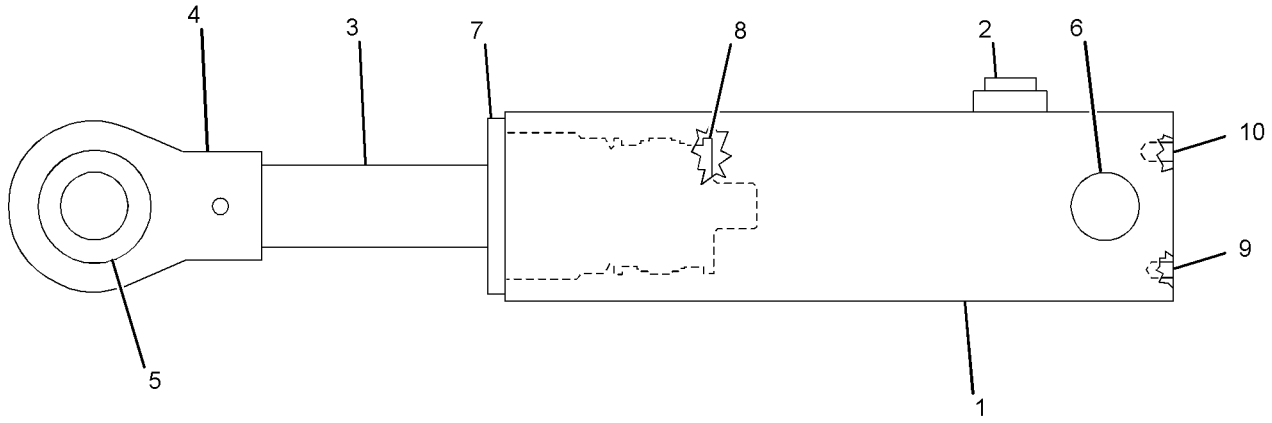

GRAPHIC #1 **<END>** g01069735

HYDRAULIC SYSTEM

173-8612 CYLINDER GP-LIFT–RH

S/N: BXY1-UP

220MM BORE X 911MM STROKE

PART OF 345-3930 HYDRAULIC AR, 132-6136 LINES GP-LIFT CYLINDER

SMCS-5102 **i02375318**

NOTE	REF NO	GRAPHIC REF	PART NUMBER	QTY	PART NAME 1 2 3 4 5 6 (PRODUCT LEVEL)	SEE PAGE
	1	1	**173-8615**	1	CYLINDER AS	
	1A	1	**152-3750**	1	BEARING	
	2	1	**7J-9250**	1	LOCKNUT (3-1/4X12-THD)	
	3	1	**6E-0496**	1	RING-WEAR	
	4	1	**219-1438**	1	SEAL AS	
	5	1	**276-0478**	1	PISTON	
	6	1	**9M-5894**	1	SEAL-O-RING	
	7	1	**108-0122**	1	RING-BACKUP	
	8	1	**173-8614**	1	HEAD	
	9	1	**135-7816**	1	ROD AS	
		1	**152-3750**	1	BEARING	
	10	1	**225-3290**	1	SEAL-WIPER	
	11	1	**167-2339**	1	SEAL-U-CUP	
	12	1	**167-2222**	1	SEAL AS-BUFFER	
	13	1	**8T-3331**	1	RING-WEAR	
M	14	1	**8T-0668**	11	BOLT (M24X3X110-MM)	
	15	1	**6V-8237**	11	WASHER (26X44X4-MM THK)	

M-METRIC PART

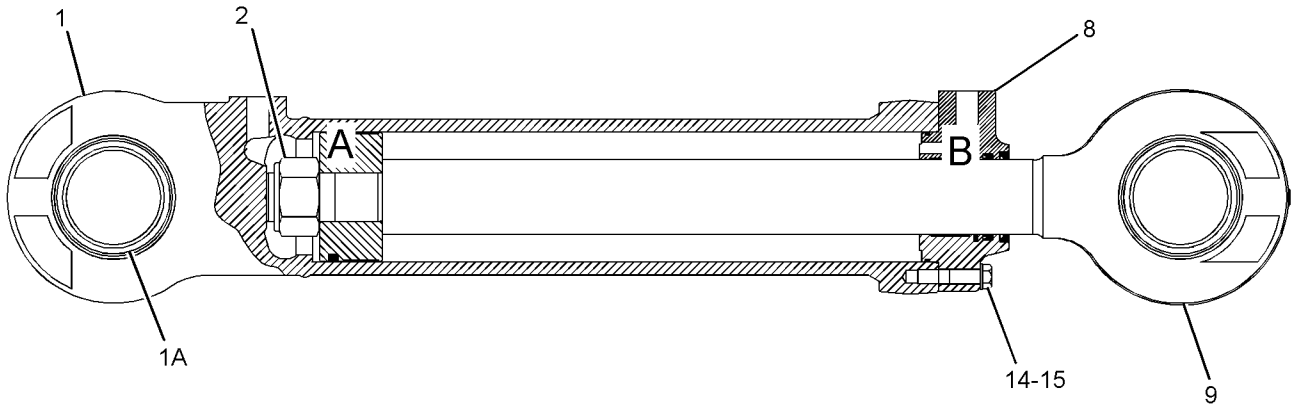

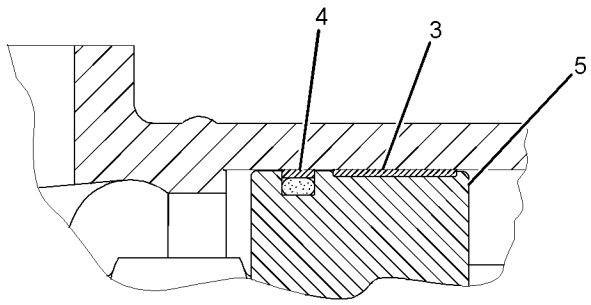

VIEW OF AREA A

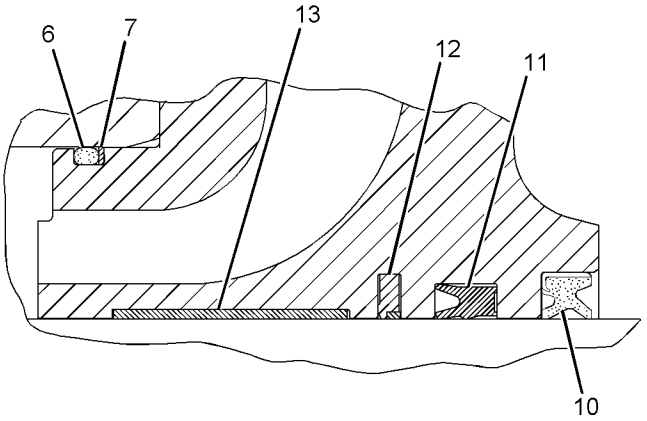

VIEW OF AREA B

GRAPHIC #1 **<END>** g01021002

HYDRAULIC SYSTEM

173-8613 CYLINDER GP-LIFT–LH

S/N: BXY1-UP

220MM BORE X 911MM STROKE

PART OF 345-3930 HYDRAULIC AR, 132-6136 LINES GP-LIFT CYLINDER

SMCS-5102 **i02375189**

NOTE	REF NO	GRAPHIC REF	PART NUMBER	QTY	PART NAME 1 2 3 4 5 6 (PRODUCT LEVEL)	SEE PAGE
	1	1	**173-8616**	1	CYLINDER AS	
	1A	1	**152-3750**	1	BEARING	
	2	1	**7J-9250**	1	LOCKNUT (3-1/4X12-THD)	
	3	1	**6E-0496**	1	RING-WEAR	
	4	1	**219-1438**	1	SEAL AS	
	5	1	**276-0478**	1	PISTON	
	6	1	**9M-5894**	1	SEAL-O-RING	
	7	1	**108-0122**	1	RING-BACKUP	
	8	1	**173-8614**	1	HEAD	
	9	1	**135-7816**	1	ROD AS	
		1	**152-3750**	1	BEARING	
	10	1	**225-3290**	1	SEAL-WIPER	
	11	1	**167-2339**	1	SEAL-U-CUP	
	12	1	**167-2222**	1	SEAL AS-BUFFER	
	13	1	**8T-3331**	1	RING-WEAR	
M	14	1	**8T-0668**	11	BOLT (M24X3X110-MM)	
	15	1	**6V-8237**	11	WASHER (26X44X4-MM THK)	

M-METRIC PART

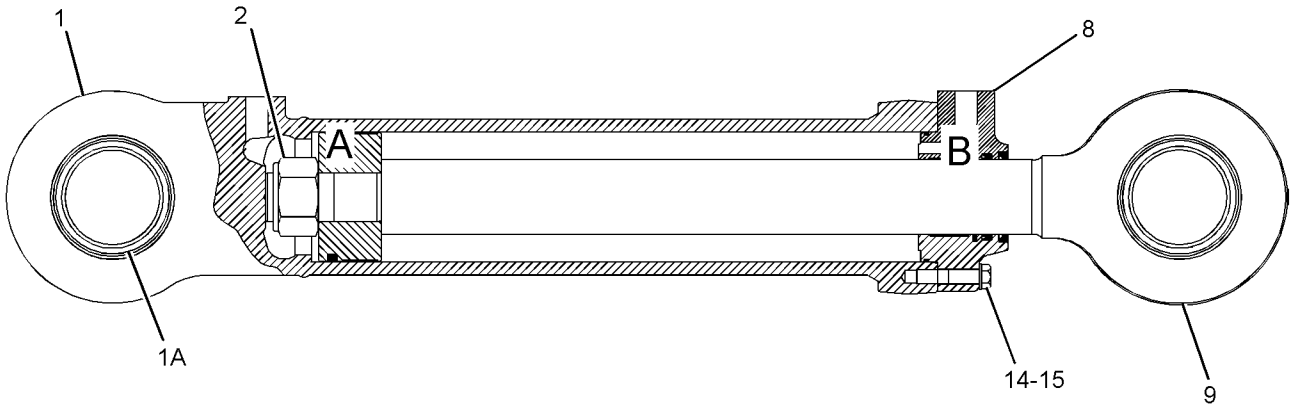

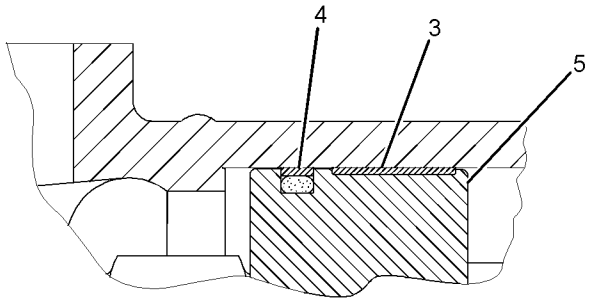

VIEW OF AREA A

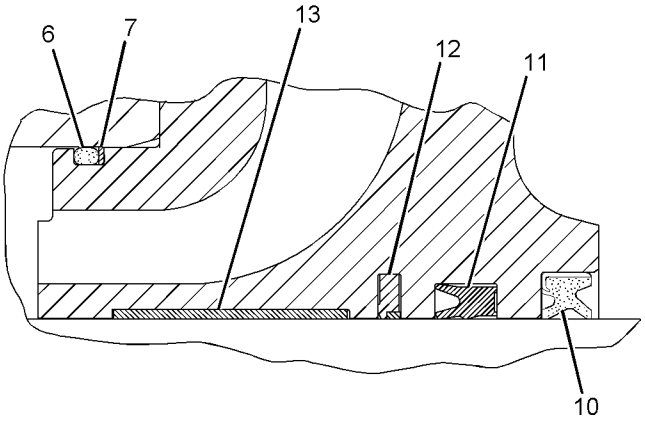

VIEW OF AREA B

GRAPHIC #1 **<END>** g01020962

HYDRAULIC SYSTEM

261-1516 CYLINDER GP-LIFT & TILT—LIFT, TILT

S/N: BXY1900-UP
PART OF 2Q-8733 STEEL MILL AR
AN ATTACHMENT

SMCS-5102, 5104, 5736 **i02928068**

NOTE	REF NO	GRAPHIC REF	PART NUMBER	QTY	PART NAME 1 2 3 4 5 6 (PRODUCT LEVEL)	SEE PAGE
	1	1	**118-9902**	1	SPACER (12X20X43-MM THK)	
	2	1	**203-5443**	1	BRACKET AS	
	3	1	**227-3316**	1	BRACKET	
Y	4	1	**230-7913**	1	CYLINDER & SENSOR GP-TILT	1417
Y	5	1	**230-7914**	1	CYLINDER & SENSOR GP-LIFT (RH)	1413
	6	1	**261-1517**	1	HARNESS AS-SENSOR (LIFT POSITION, TILT POSITION)	
	7	1	**115-3071**	1	CLIP AS-CONNECTOR (6-PIN)	
	8	1	**5P-9297**	5	CLIP	
	9	1	**6D-4246**	12	CLIP	
	10	1	**8T-4121**	13	WASHER-HARD (11X21X2.5-MM THK)	
M	11	1	**8T-4133**	1	NUT (M10X1.5-THD)	
M	12	1	**8T-4137**	11	BOLT (M10X1.5X20-MM)	
M	13	1	**8T-5005**	1	BOLT (M10X1.5X70-MM)	
E	14	1	**193-6911**		INSULATION (196.7-CM)	
E	14A	1	**193-6911**		INSULATION (187.4-CM)	

E-ORDER BY THE CENTIMETER
M-METRIC PART
Y-SEPARATE ILLUSTRATION

261-1516 **CYLINDER GP-LIFT & TILT** *(contd.)* **i02928068**

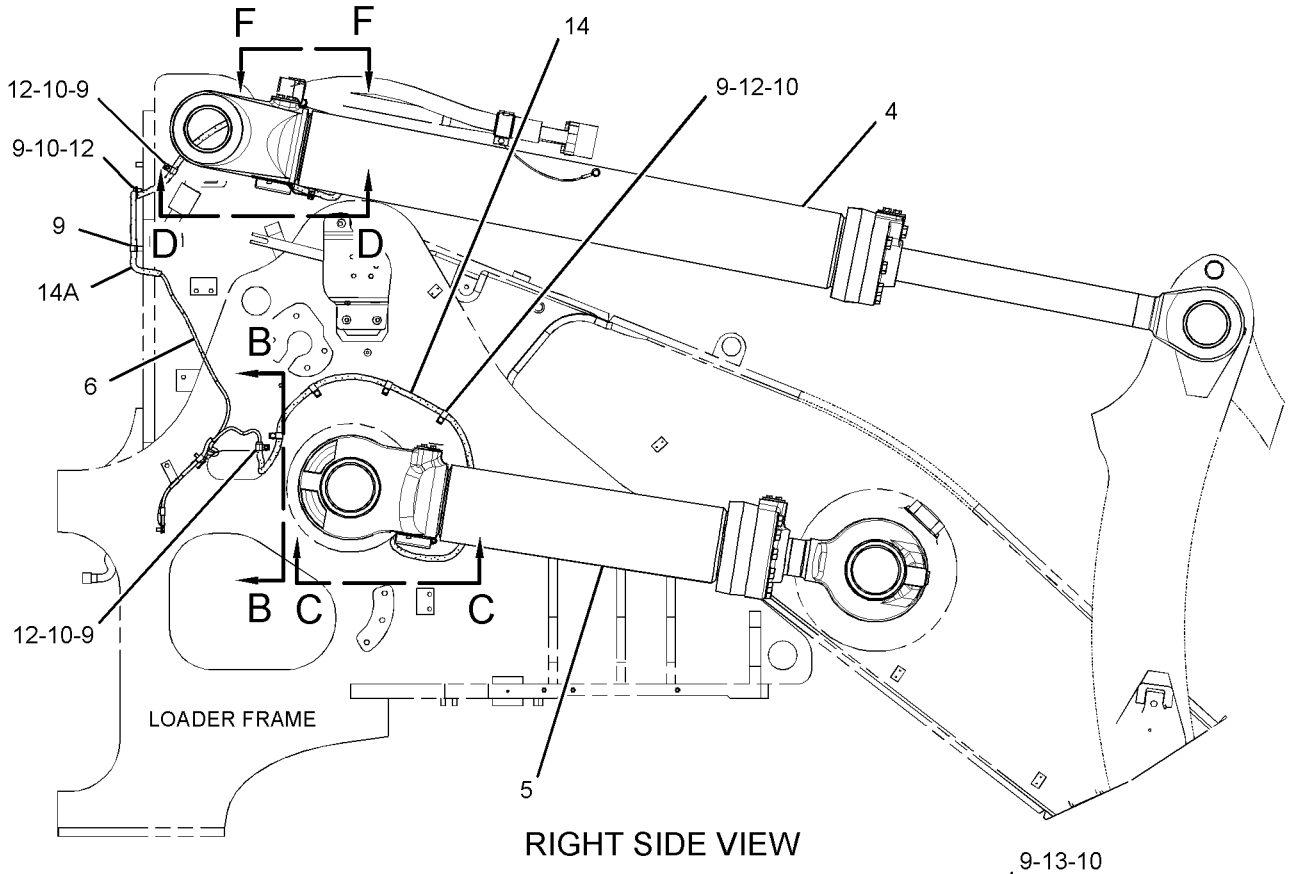

RIGHT SIDE VIEW

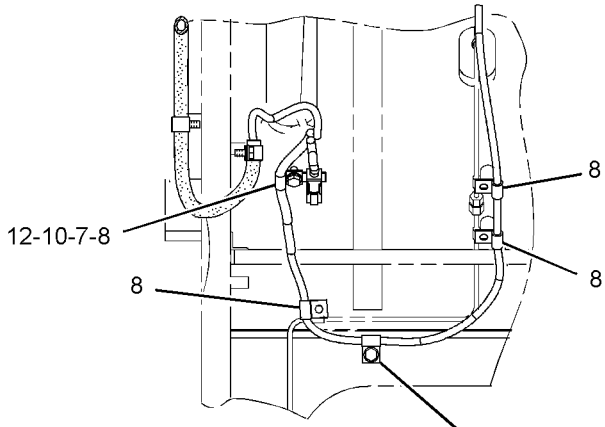

SECTION B-B

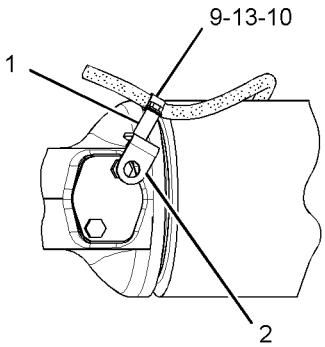

VIEW F-F

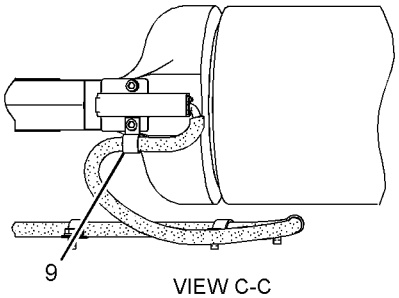

VIEW C-C

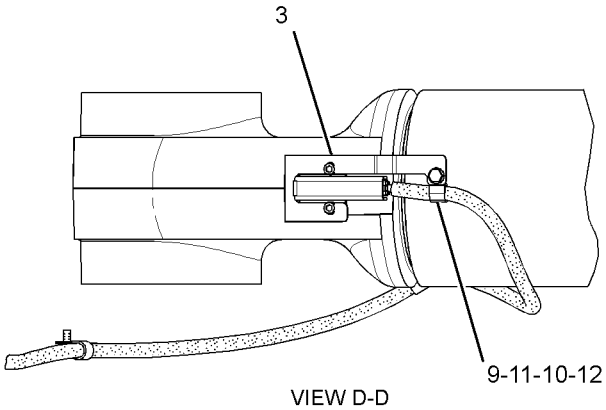

VIEW D-D

GRAPHIC #1 **<END>** g01521773

HYDRAULIC SYSTEM

261-1516 CYLINDER GP-LIFT & TILT—LIFT, TILT

S/N: BXY2733-UP
PART OF 2Q-8733, 2Q-8749 STEEL MILL AR
AN ATTACHMENT

SMCS-5102, 5104, 5736 **i03370722**

NOTE	REF NO	GRAPHIC REF	PART NUMBER	QTY	PART NAME 1 2 3 4 5 6 (PRODUCT LEVEL)	SEE PAGE
	1	1	**203-5443**	1	BRACKET AS	
	2	1	**227-3316**	1	BRACKET	
Y	3	1	**230-7913**	1	CYLINDER & SENSOR GP-TILT	1417
Y	4	1	**230-7914**	1	CYLINDER & SENSOR GP-LIFT (RH)	1413
	5	1	**261-1517**	1	HARNESS AS-SENSOR (LIFT POSITION, TILT POSITION)	
	6	1	**5P-9297**	5	CLIP	
	7	1	**6D-4246**	12	CLIP	
C	8	1	**8T-4121**	9	WASHER-HARD (11X21X2.5-MM THK)	
M	9	1	**8T-4133**	1	NUT (M10X1.5-THD)	
CM	10	1	**8T-4137**	8	BOLT (M10X1.5X20-MM)	
CE	11	1	**193-6911**		INSULATION (185.4-CM)	
E	11A	1	**193-6911**		INSULATION (187.4-CM)	

C-CHANGE FROM PREVIOUS TYPE
E-ORDER BY THE CENTIMETER
M-METRIC PART
Y-SEPARATE ILLUSTRATION

261-1516 **CYLINDER GP-LIFT & TILT** *(contd.)* **i03370722**

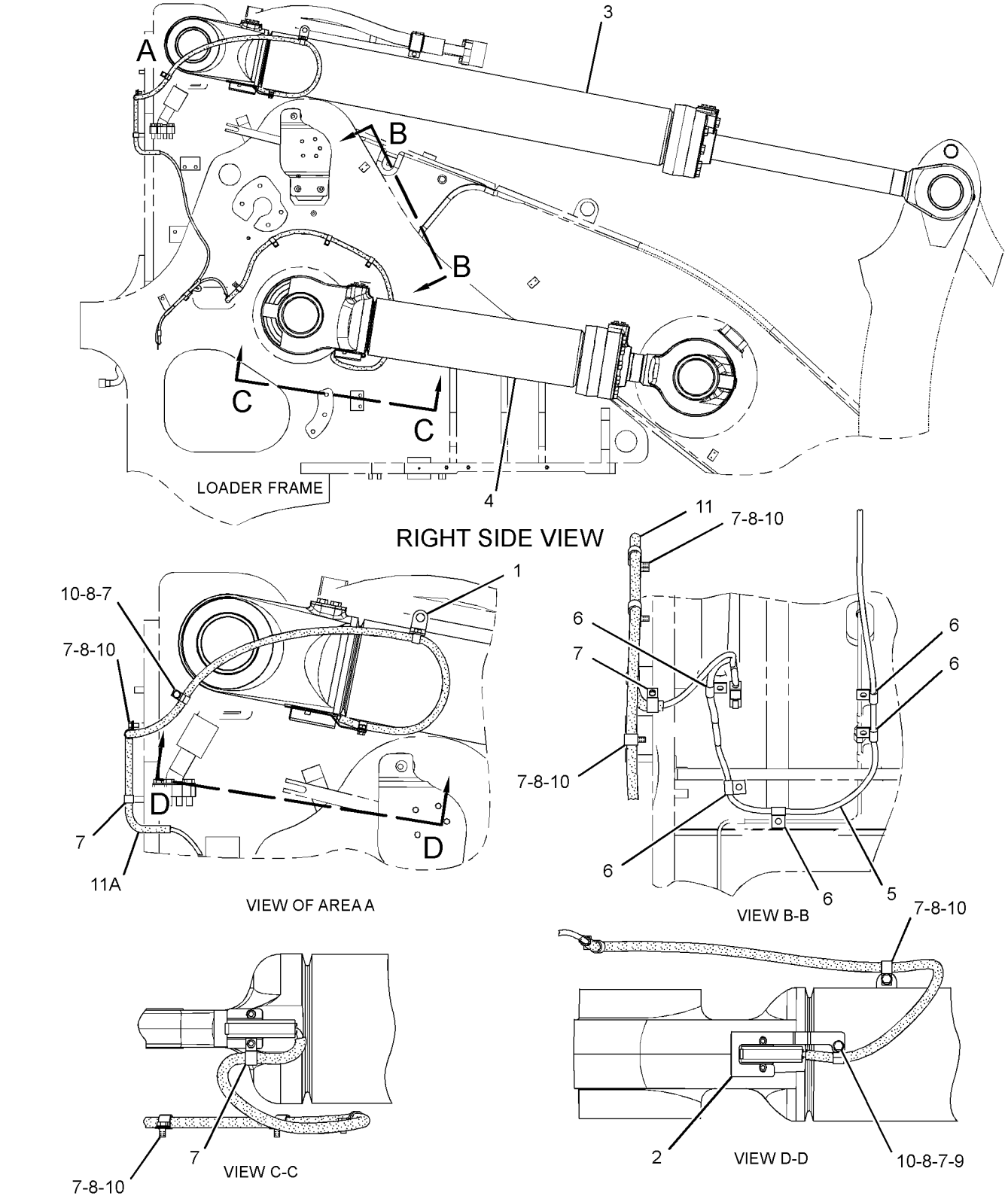

GRAPHIC #1 **<END>** g01746953

HYDRAULIC SYSTEM

231-1955 CYLINDER GP-TILT

S/N: BXY1-UP
220-MM BORE X 1770-MM STROKE
PART OF 156-5519, 296-8268 LINES GP-TILT CYLINDER
AN ATTACHMENT

SMCS-5104 **i02928069**

NOTE	REF NO	GRAPHIC REF	PART NUMBER	QTY	PART NAME 1 2 3 4 5 6 (PRODUCT LEVEL)	SEE PAGE
	1	1	**136-1082**	1	PISTON	
R	2	1	**152-1646**	1	ROD AS	
	2A	1	**152-3739**	2	BEARING-SLEEVE	
R	3	1	**231-1957**	1	CYLINDER AS	
	3A	1	**152-3739**	2	BEARING-SLEEVE	
	4	1	**231-1960**	1	HEAD	
	5	1	**108-0122**	1	RING-BACKUP	
	6	1	**167-2220**	1	SEAL AS-BUFFER	
	7	1	**167-2336**	1	SEAL-U-CUP	
	8	1	**192-1425**	1	SEAL AS	
	9	1	**225-3289**	1	SEAL-WIPER	
	10	1	**6E-0496**	1	RING-WEAR	
	11	1	**6V-8237**	12	WASHER (26X44X4-MM THK)	
	12	1	**7J-9250**	1	LOCKNUT (3-1/4X12-THD)	
M	13	1	**8T-0666**	10	BOLT (M24X3X90-MM)	
M	14	1	**8T-0669**	2	BOLT (M24X3X130-MM)	
	15	1	**9M-5894**	1	SEAL-O-RING	
	16	1	**9X-3579**	1	RING-WEAR	

M-METRIC PART
R-REMFG PART MAY BE AVAILABLE

231-1955 CYLINDER GP-TILT *(contd.)* **i02928069**

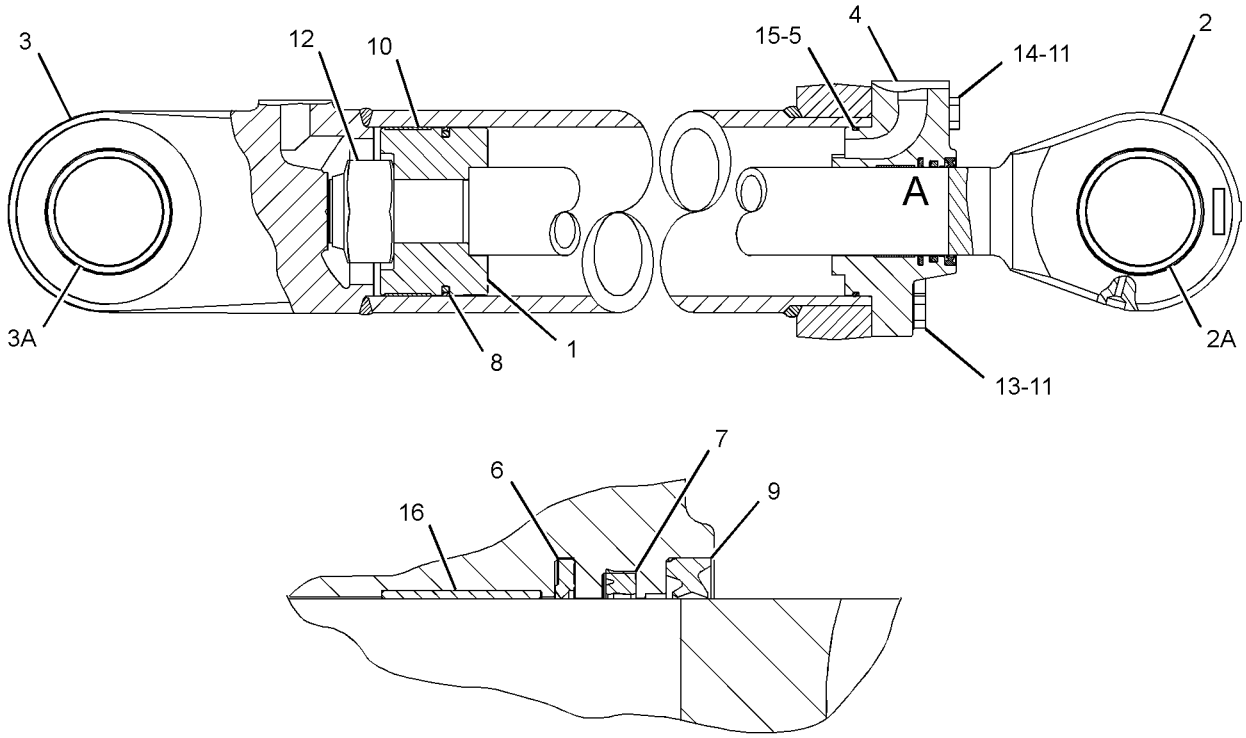

GRAPHIC #1 **<END>** g01458303

HYDRAULIC SYSTEM

271-6441 CYLINDER GP-TILT

S/N: BXY1-UP

PART OF 246-6921, 296-8265 LINES GP-TILT CYLINDER

AN ATTACHMENT

SMCS-5104 **i02457362**

NOTE	REF NO	GRAPHIC REF	PART NUMBER	QTY	PART NAME 1 2 3 4 5 6 (PRODUCT LEVEL)	SEE PAGE
	1	1	**231-1960**	1	HEAD	
	2	1	**253-2596**	1	PISTON	
	3	1	**254-3214**	1	ROD AS	
		1	**152-3739**	2	BEARING-SLEEVE	
	4	1	**271-6442**	1	CYLINDER AS	
		1	**152-3739**	2	BEARING-SLEEVE	
	5	1	**108-0122**	1	RING-BACKUP	
	6	1	**167-2220**	1	SEAL AS-BUFFER	
	7	1	**167-2336**	1	SEAL-U-CUP	
	8	1	**192-1425**	1	SEAL AS	
	9	1	**225-3289**	1	SEAL-WIPER	
	10	1	**6E-0496**	1	RING-WEAR	
	11	1	**6V-8237**	12	WASHER (26X44X4-MM THK)	
	12	1	**7J-9250**	1	LOCKNUT (3-1/4X12-THD)	
M	13	1	**8T-0666**	10	BOLT (M24X3X90-MM)	
M	14	1	**8T-0669**	2	BOLT (M24X3X130-MM)	
	15	1	**9M-5894**	1	SEAL-O-RING	
	16	1	**9X-3579**	1	RING-WEAR	

M-METRIC PART

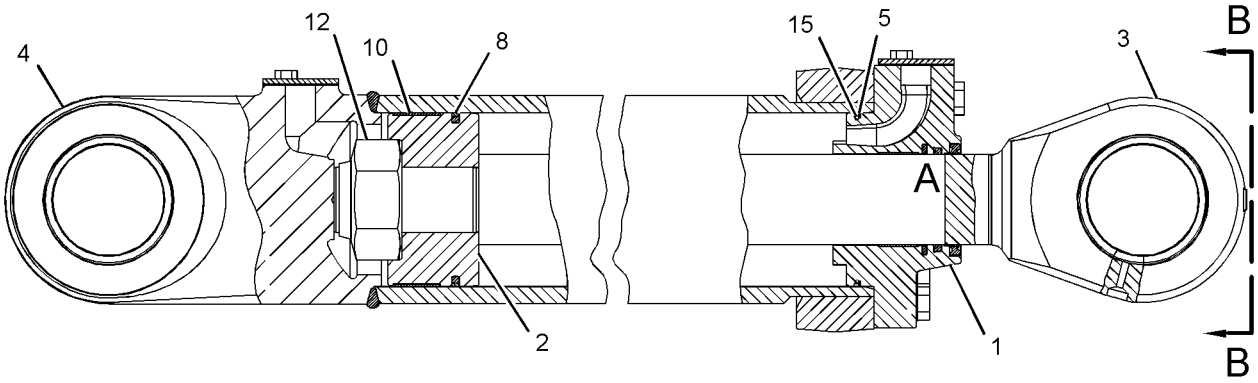

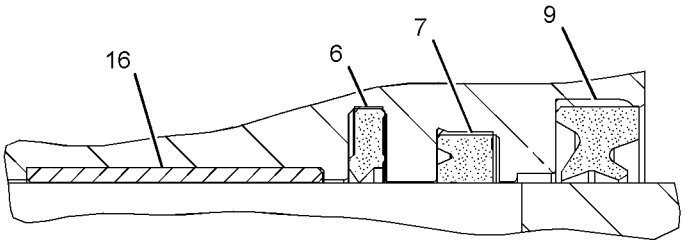

VIEW OF AREA A

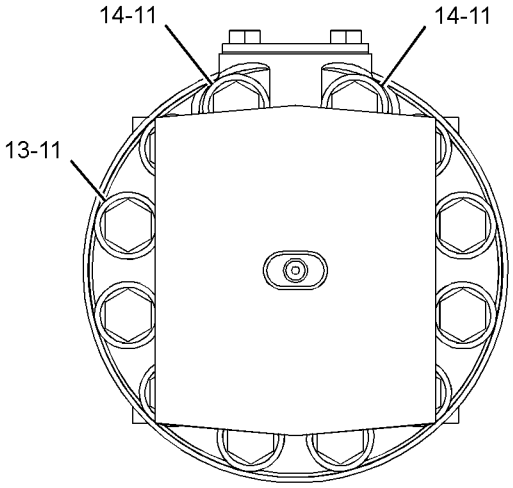

VIEW B-B

GRAPHIC #1 **<END>** g01230218

HYDRAULIC SYSTEM

230-2410 FILTER & LINES GP-CASE DRAIN

S/N: BXY1-2170

PART OF 225-5449, 298-2038 HYDRAULIC AR

SMCS-5057, 5091 **i02374206**

NOTE	REF NO	GRAPHIC REF	PART NUMBER	QTY	PART NAME 1 2 3 4 5 6 (PRODUCT LEVEL)	SEE PAGE
	1	1	**6V-0852**	2	CAP-DUST	
	2	1	*148-8430*	2	TEE AS	
					(EACH INCLUDES)	
		1	**6V-9746**	1	SEAL-O-RING	
		1	**7X-0873**	1	TEE	
	3	1	*148-8443*	1	TEE AS	
		1	**3J-1907**	1	SEAL-O-RING	
		1	**6V-8397**	1	SEAL-O-RING	
		1	**7X-2459**	1	TEE-O-RING	
Y	4	2	**166-4647**	1	FILTER GP-OIL (STEERING PUMP CASE DRAIN)	1440
Y	4A	2	**166-4647**	1	FILTER GP-OIL (HYDRAULIC PUMP CASE DRAIN)	1440
Y	4B	2	**166-4647**	1	FILTER GP-OIL (HYD FAN PUMP, MOTOR CASE DRAIN)	1440
I	5	1	**9W-1698**	1	HOSE AS	
	6	1	**179-2805**	1	BRACKET	
I	7	2	**203-4811**	1	HOSE AS	
	8	1	**203-5535**	1	BRACKET AS	
I	9	2	**204-0135**	1	HOSE AS	
I	10	1	**226-1955**	1	HOSE AS	
I	11	2	**226-1973**	1	HOSE AS	
	12	2	**226-1982**	1	TUBE AS	
I	13	1	**227-8837**	1	HOSE AS	
I	14	1	**272-7981**	1	HOSE AS	
	15	2	*148-8339*	1	CONNECTOR AS	
		2	**6V-8716**	1	CONNECTOR	
		2	**6V-9746**	1	SEAL-O-RING	
		2	**7M-8485**	1	SEAL-O-RING	
	16	2	*148-8357*	2	ELBOW AS	
					(EACH INCLUDES)	
		2	**5K-9090**	1	SEAL-O-RING	
		2	**6V-9008**	1	ELBOW	
		2	**7M-8485**	1	SEAL-O-RING	
	17	1,2	*148-8360*	4	ELBOW AS	
					(EACH INCLUDES)	
		1,2	**6V-9182**	1	ELBOW	
		1,2	**6V-9746**	1	SEAL-O-RING	
		1,2	**7M-8485**	1	SEAL-O-RING	
	18	1	*148-8429*	1	TEE AS	
		1	**5K-9090**	2	SEAL-O-RING	
		1	**6V-9840**	1	TEE-SWIVEL	
	19	1	*148-8449*	1	TEE AS-SWIVEL	
		1	**6V-9746**	2	SEAL-O-RING	
		1	**6V-9839**	1	TEE-SWIVEL	
	20	1	*153-6237*	1	ELBOW AS	
		1	**3D-2824**	1	SEAL-O-RING	
		1	**6V-9004**	1	ELBOW	
		1	**6V-9746**	1	SEAL-O-RING	
	21	1	*155-2026*	2	UNION AS	
					(EACH INCLUDES)	
		1	**5K-9090**	2	SEAL-O-RING	
		1	**6V-8998**	1	UNION	
	22	1	*164-5567*	2	COUPLER AS-QUICK DISCONNECT	
					(EACH INCLUDES)	
		1	**3J-1907**	1	SEAL-O-RING	
		1	**6V-3965**	1	FITTING (QUICK DISCONNECT)	
	23	1	**3P-2404**	1	CLIP	

230-2410 FILTER & LINES GP-CASE DRAIN *(contd.)* i02374206

NOTE	REF NO	GRAPHIC REF	PART NUMBER	QTY	PART NAME 1 2 3 4 5 6 (PRODUCT LEVEL)	SEE PAGE
	24	1,2	**6V-1889**	6	CLIP	
	25	1	**6V-9172**	2	NUT (1-7/16-12-THD)	
	26	1	**6V-9833**	2	CAP AS	
	27	1	**7D-7233**	1	CLIP	
	28	1	**7X-7729**	6	WASHER (11X25X3-MM THK)	
	29	1	**8T-4121**	16	WASHER-HARD (11X21X2.5-MM THK)	
M	30	1	**8T-4133**	1	NUT (M10X1.5-THD)	
M	31	1	**8T-4136**	13	BOLT (M10X1.5X25-MM)	
M	32	1	**8T-4137**	2	BOLT (M10X1.5X20-MM)	
M	33	1	**8T-4196**	6	BOLT (M10X1.5X35-MM)	

I-REFER TO HYDRAULIC INFORMATION SYSTEM
M-METRIC PART
Y-SEPARATE ILLUSTRATION

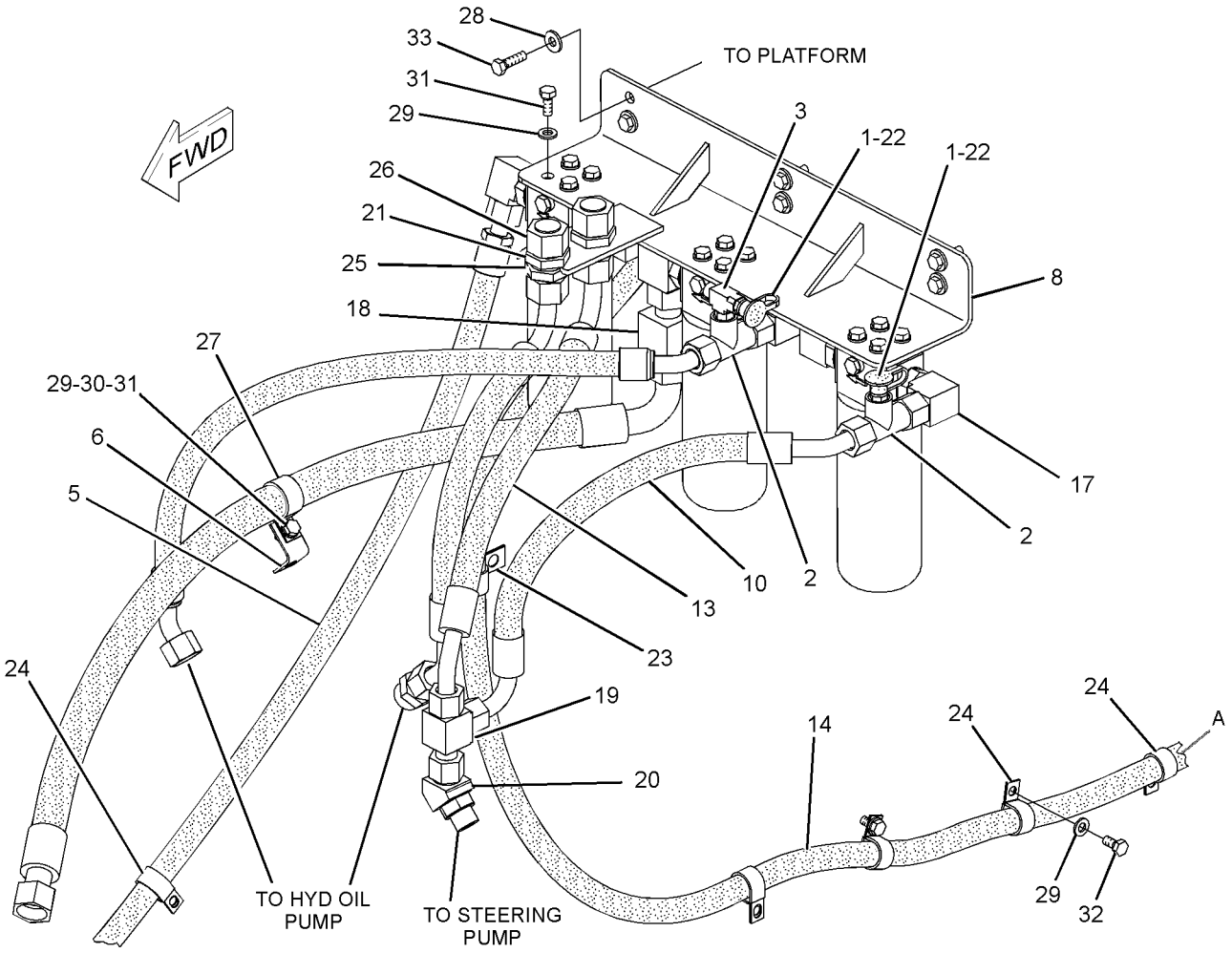

GRAPHIC #1 g01186688

230-2410 FILTER & LINES GP-CASE DRAIN *(contd.)* i02374206

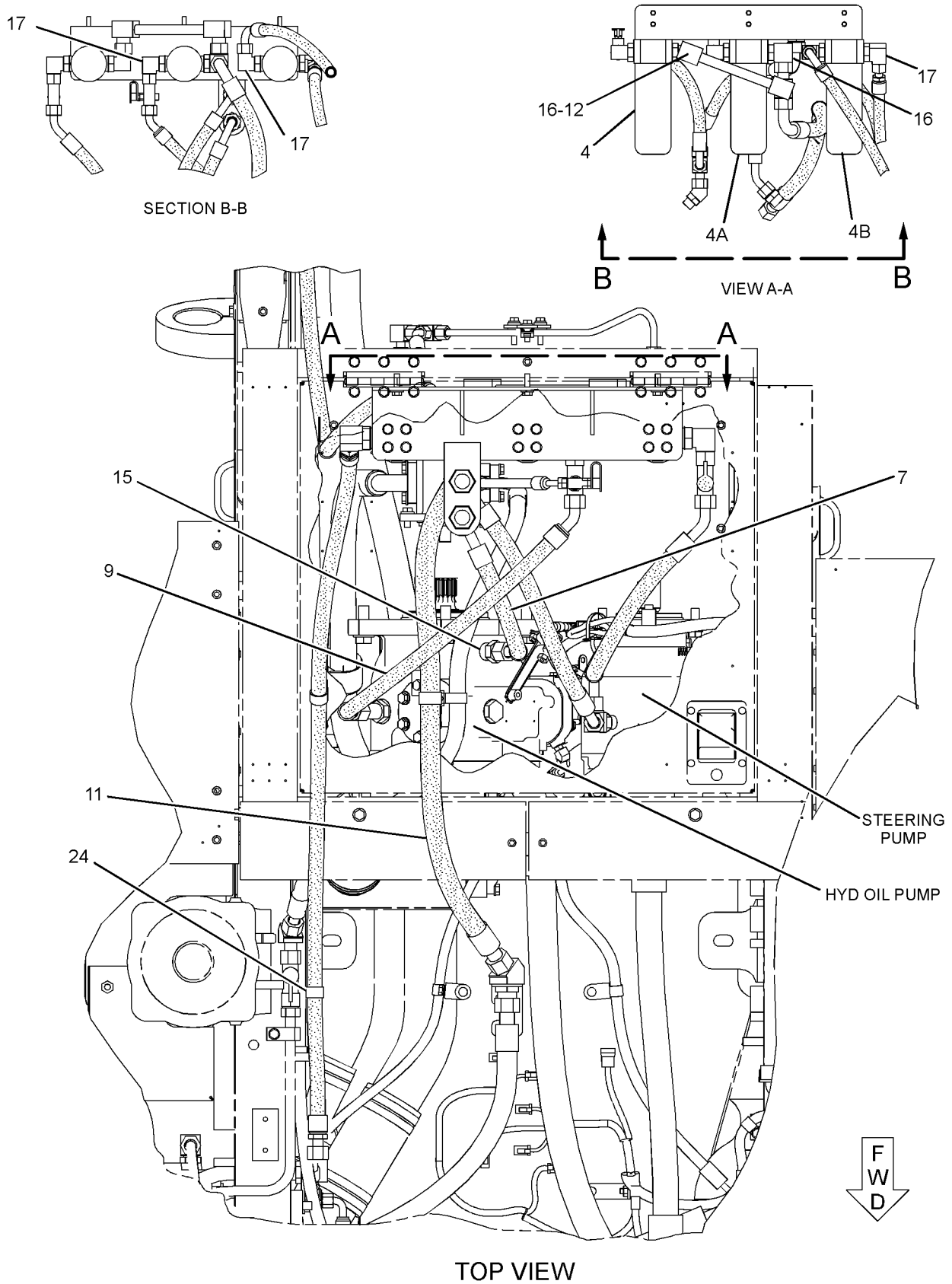

GRAPHIC #2 **<END>** g01186690

HYDRAULIC SYSTEM

230-2410 FILTER & LINES GP-CASE DRAIN

S/N: BXY2171-3999

PART OF 298-2038 HYDRAULIC AR

SMCS-5057, 5091 **i03235621**

NOTE	REF NO	GRAPHIC REF	PART NUMBER	QTY	PART NAME 1 2 3 4 5 6 (PRODUCT LEVEL)	SEE PAGE
	1	1	**6V-0852**	2	CAP-DUST	
	2	1	*148-8430*	2	TEE AS	
					(EACH INCLUDES)	
		1	**6V-9746**	1	SEAL-O-RING	
		1	**7X-0873**	1	TEE	
	3	1	*148-8443*	1	TEE AS	
		1	**3J-1907**	1	SEAL-O-RING	
		1	**6V-8397**	1	SEAL-O-RING	
		1	**7X-2459**	1	TEE-O-RING	
Y	4	1	**166-4647**	1	FILTER GP-OIL (STEERING PUMP CASE DRAIN)	1440
Y	4A	1	**166-4647**	1	FILTER GP-OIL (HYDRAULIC PUMP CASE DRAIN)	1440
Y	4B	1	**166-4647**	1	FILTER GP-OIL (HYD FAN PUMP, MOTOR CASE DRAIN)	1440
CI	5	1	**315-8420**	1	HOSE AS	
	6	1	**179-2805**	1	BRACKET	
I	7	1	**203-4811**	1	HOSE AS	
	8	1	**203-5535**	1	BRACKET AS	
I	9	1	**204-0135**	1	HOSE AS	
CI	10	1	**316-4312**	1	HOSE AS	
I	11	1	**226-1973**	1	HOSE AS	
	12	1	**226-1982**	1	TUBE AS	
CI	13	1	**157-6305**	1	HOSE AS	
I	14	1	**272-7981**	1	HOSE AS	
	15	1	*148-8339*	1	CONNECTOR AS	
		1	**6V-8716**	1	CONNECTOR	
		1	**6V-9746**	1	SEAL-O-RING	
		1	**7M-8485**	1	SEAL-O-RING	
	16	1	*148-8357*	2	ELBOW AS	
					(EACH INCLUDES)	
		1	**5K-9090**	1	SEAL-O-RING	
		1	**6V-9008**	1	ELBOW	
		1	**7M-8485**	1	SEAL-O-RING	
	17	1	*148-8360*	4	ELBOW AS	
					(EACH INCLUDES)	
		1	**6V-9182**	1	ELBOW	
		1	**6V-9746**	1	SEAL-O-RING	
		1	**7M-8485**	1	SEAL-O-RING	
	18	1	*148-8429*	1	TEE AS	
		1	**5K-9090**	2	SEAL-O-RING	
		1	**6V-9840**	1	TEE-SWIVEL	
C	19	1	*171-3673*	1	TEE AS	
		1	**3D-2824**	1	SEAL-O-RING	
		1	**5K-9090**	1	SEAL-O-RING	
		1	**6V-9746**	1	SEAL-O-RING	
		1	**108-7005**	1	TEE-O-RING	
C	20	1	*148-8352*	1	ELBOW AS	
		1	**5K-9090**	1	SEAL-O-RING	
		1	**6V-9854**	1	ELBOW	
	21	1	*155-2026*	2	UNION AS	
					(EACH INCLUDES)	
		1	**5K-9090**	2	SEAL-O-RING	
		1	**6V-8998**	1	UNION	
	22	1	*164-5567*	2	COUPLER AS-QUICK DISCONNECT	
					(EACH INCLUDES)	
		1	**214-7568**	1	SEAL-O-RING	
		1	**6V-3965**	1	FITTING (QUICK DISCONNECT)	

230-2410 FILTER & LINES GP-CASE DRAIN *(contd.)* i03235621

NOTE	REF NO	GRAPHIC REF	PART NUMBER	QTY	PART NAME 1 2 3 4 5 6 (PRODUCT LEVEL)	SEE PAGE
	23	1	**3P-2404**	1	CLIP	
C	24	1	**6V-1889**	7	CLIP	
	25	1	**6V-9172**	2	NUT (1-7/16-12-THD)	
	26	1	**6V-9833**	2	CAP AS	
	27	1	**7D-7233**	1	CLIP	
	28	1	**7X-7729**	7	WASHER (11X25X3-MM THK)	
	29	1	**8T-4121**	16	WASHER-HARD (11X21X2.5-MM THK)	
M	30	1	**8T-4133**	1	NUT (M10X1.5-THD)	
M	31	1	**8T-4136**	13	BOLT (M10X1.5X25-MM)	
M	32	1	**8T-4137**	2	BOLT (M10X1.5X20-MM)	
M	33	1	**8T-4196**	6	BOLT (M10X1.5X35-MM)	

C-CHANGE FROM PREVIOUS TYPE
I-REFER TO HYDRAULIC INFORMATION SYSTEM
M-METRIC PART
Y-SEPARATE ILLUSTRATION

230-2410 FILTER & LINES GP-CASE DRAIN *(contd.)* i03235621

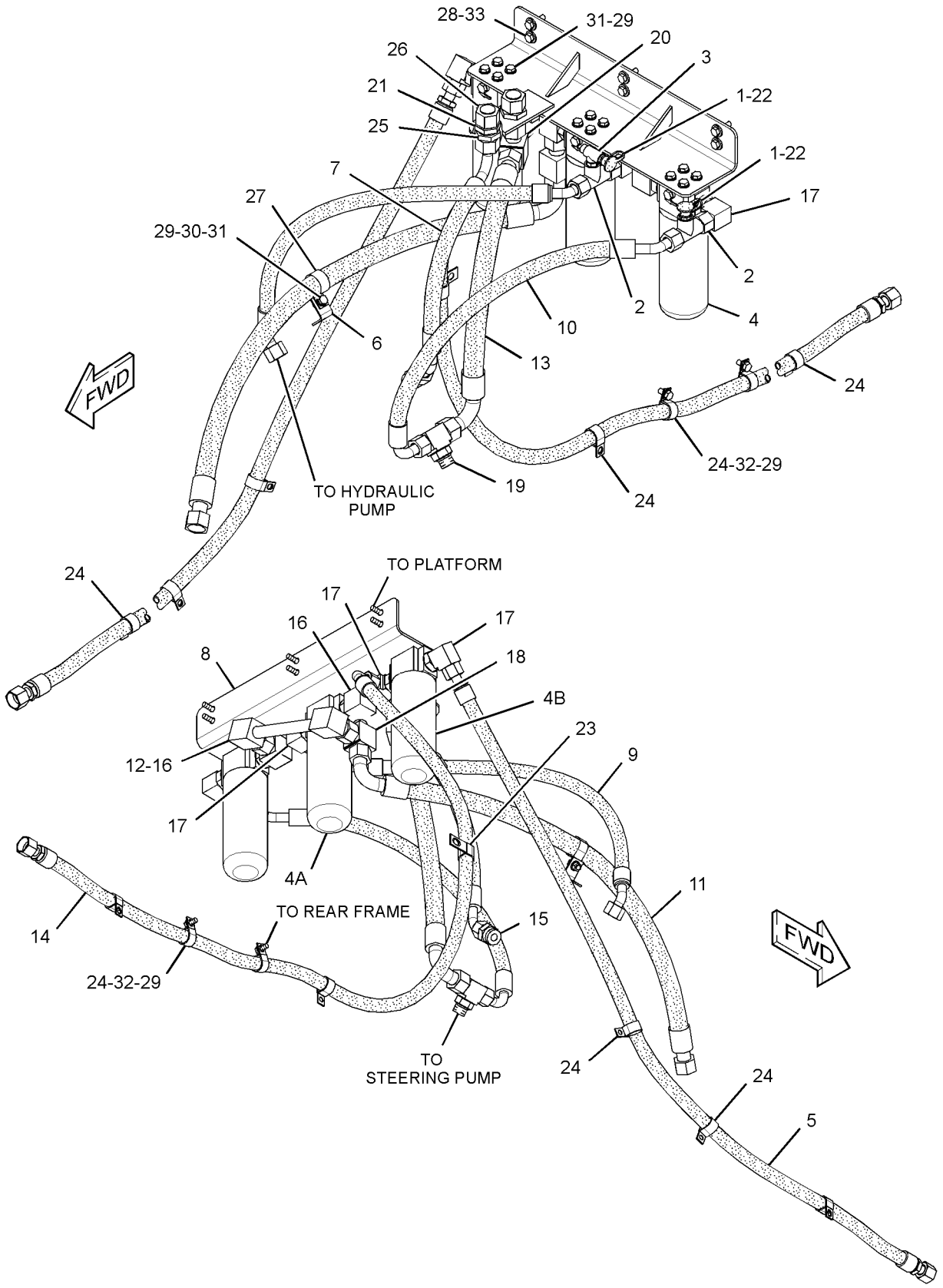

GRAPHIC #1 **<END>** g01628129

HYDRAULIC SYSTEM

345-3935 FILTER & LINES GP-CASE DRAIN

S/N: BXY4000-UP

PART OF 345-3930 HYDRAULIC AR

SMCS-5057, 5091 **i03750957**

NOTE	REF NO	GRAPHIC REF	PART NUMBER	QTY	PART NAME 1 2 3 4 5 6 (PRODUCT LEVEL)	SEE PAGE
	1	1	**6V-0852**	2	CAP-DUST	
	2	1	**125-8534**	1	PLATE AS	
	3	1	*148-8430*	2	TEE AS	
					(EACH INCLUDES)	
		1	**6V-9746**	1	SEAL-O-RING	
		1	**7X-0873**	1	TEE	
	4	1	*148-8443*	1	TEE AS	
		1	**3J-1907**	1	SEAL-O-RING	
		1	**6V-8397**	1	SEAL-O-RING	
		1	**7X-2459**	1	TEE-O-RING	
Y	5	1	**166-4647**	1	FILTER GP-OIL (STEERING PUMP CASE DRAIN)	1440
Y	5A	1	**166-4647**	1	FILTER GP-OIL (HYDRAULIC FAN PUMP CASE DRAIN)	1440
Y	5B	1	**166-4647**	1	FILTER GP-OIL (HYDRAULIC FAN MOTOR CASE DRAIN)	1440
	6	1	**179-2805**	1	BRACKET	
	7	1	**203-5535**	1	BRACKET AS	
I	8	1	**204-0135**	1	HOSE AS	
I	9	1	**226-1973**	1	HOSE AS	
	10	1	**226-1982**	1	TUBE AS	
I	11	1	**272-7981**	1	HOSE AS	
I	12	1	**315-8420**	1	HOSE AS	
I	13	1	**316-4312**	1	HOSE AS	
	14	1	*148-8347*	1	ELBOW AS	
		1	**3D-2824**	1	SEAL-O-RING	
		1	**6V-9007**	1	ELBOW	
		1	**6V-9746**	1	SEAL-O-RING	
	15	1	*148-8357*	2	ELBOW AS	
					(EACH INCLUDES)	
		1	**5K-9090**	1	SEAL-O-RING	
		1	**6V-9008**	1	ELBOW	
		1	**7M-8485**	1	SEAL-O-RING	
	16	1	*148-8360*	4	ELBOW AS	
					(EACH INCLUDES)	
		1	**6V-9182**	1	ELBOW	
		1	**6V-9746**	1	SEAL-O-RING	
		1	**7M-8485**	1	SEAL-O-RING	
	17	1	*148-8429*	1	TEE AS	
		1	**5K-9090**	2	SEAL-O-RING	
		1	**6V-9840**	1	TEE-SWIVEL	
	18	1	*164-5567*	2	COUPLER AS-QUICK DISCONNECT	
					(EACH INCLUDES)	
		1	**6V-3965**	1	FITTING (QUICK DISCONNECT)	
		1	**214-7568**	1	SEAL-O-RING	
	19	1	**3P-2404**	2	CLIP	
	20	1	**5P-7468**	1	CLIP (SLOT)	
	21	1	**5P-7469**	1	CLIP (TAB)	
	22	1	**5P-8444**	1	GROMMET	
	23	1	**6V-1889**	6	CLIP	
	24	1	**7X-7729**	6	WASHER (11X25X3-MM THK)	
	25	1	**8T-4121**	16	WASHER-HARD (11X21X2.5-MM THK)	
M	26	1	**8T-4133**	1	NUT (M10X1.5-THD)	
M	27	1	**8T-4136**	12	BOLT (M10X1.5X25-MM)	
M	28	1	**8T-4137**	1	BOLT (M10X1.5X20-MM)	
M	29	1	**8T-4196**	7	BOLT (M10X1.5X35-MM)	

345-3935 FILTER & LINES GP-CASE DRAIN *(contd.)* i03750957

I-REFER TO HYDRAULIC INFORMATION SYSTEM
M-METRIC PART
Y-SEPARATE ILLUSTRATION

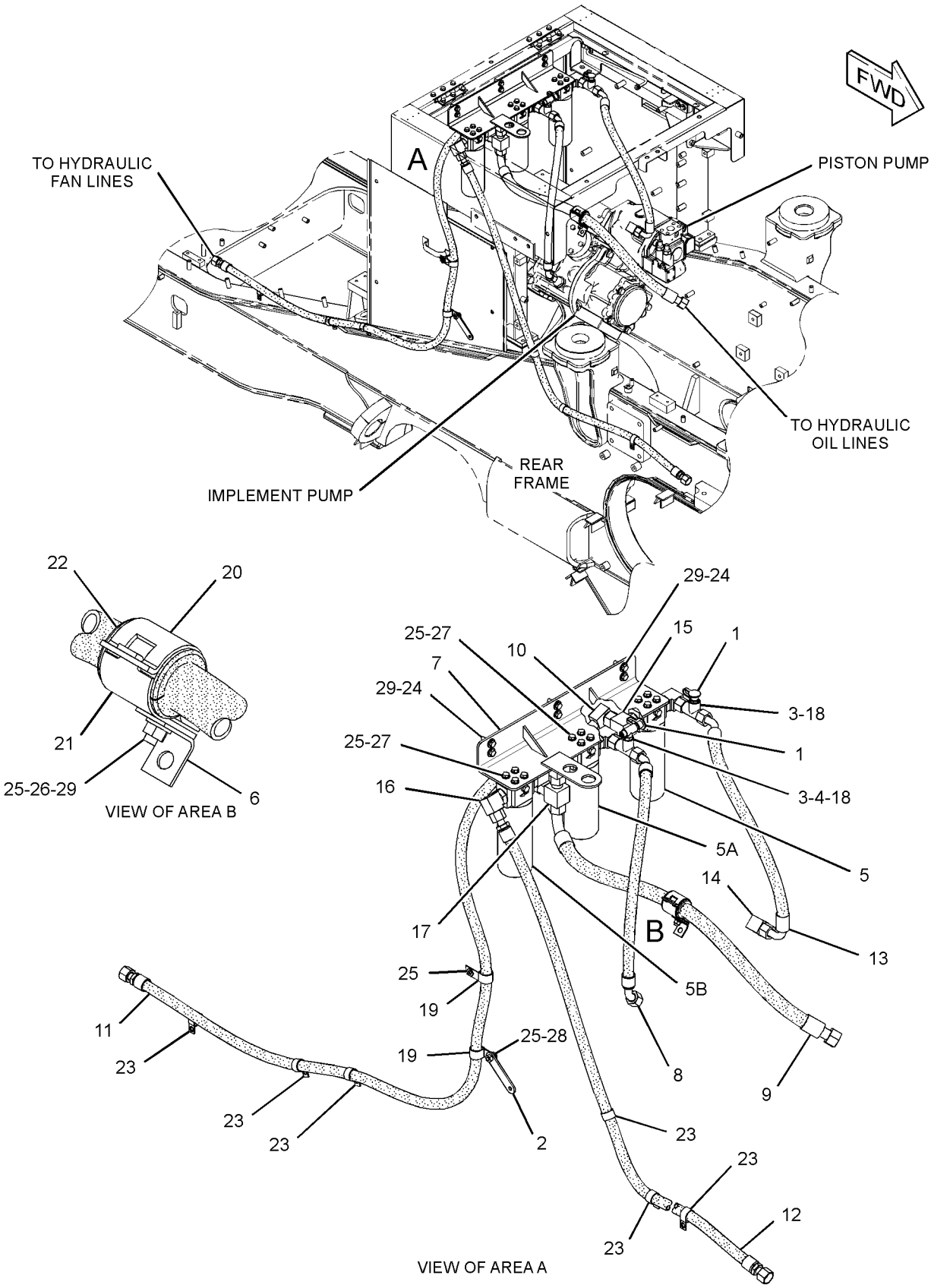

GRAPHIC #1 **<END>** g02039077

HYDRAULIC SYSTEM

115-2129 FILTER GP-OIL—STEERING, IMPLEMENT, PILOT

S/N: BXY1-3999

PART OF 230-2400 LINES GP-HYDRAULIC

SMCS-5068, 5091, 5092 **i03529241**

NOTE	REF NO	GRAPHIC REF	PART NUMBER	QTY	PART NAME 1 2 3 4 5 6 (PRODUCT LEVEL)	SEE PAGE
	1	1	**126-1817**	1	FILTER-OIL (ULTRA HIGH EFFICIENCY)	
	2	1	**339-4361**	1	SWITCH AS-PRESSURE (OIL FILTER BYPASS)	
		1	**102-8802**	1	KIT-RECEPTACLE (2-PIN)	
					(INCLUDES RECEPTACLE AS AND WEDGE)	
		1	**8T-8729**	2	PIN-CONNECTOR (16-GA TO 18-GA)	
E		1	**9X-1813**		SLEEVE (14-CM)	
	3	1	**3J-1907**	1	SEAL-O-RING	
	4	1	**5F-9144**	1	SEAL-O-RING	

E-ORDER BY THE CENTIMETER

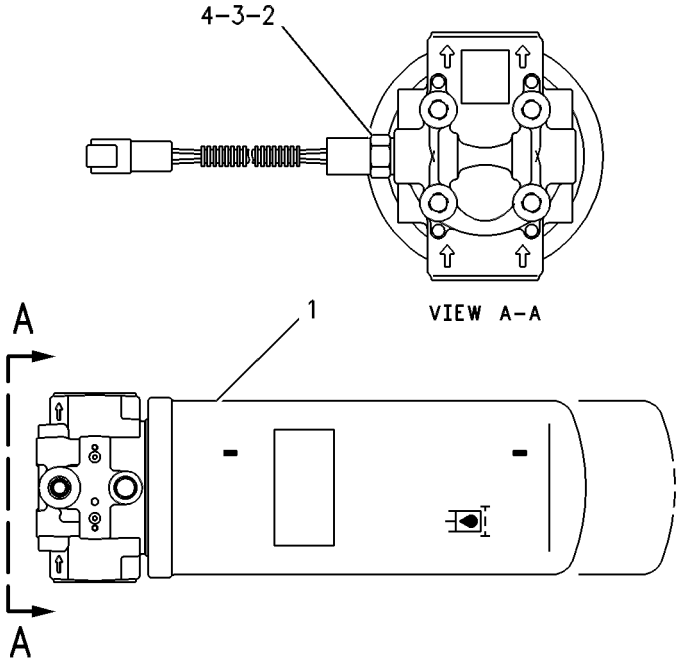

GRAPHIC #1 **<END>** g00255748

HYDRAULIC SYSTEM

166-4647 FILTER GP-OIL—CASE DRAIN

S/N: BXY1-UP

PART OF 230-2410, 345-3935 FILTER & LINES GP-CASE DRAIN

SMCS-5068, 5091, 5092 **i03120526**

NOTE	REF NO	GRAPHIC REF	PART NUMBER	QTY	PART NAME 1 2 3 4 5 6 (PRODUCT LEVEL)	SEE PAGE
	1	1	**1G-8878**	1	FILTER-OIL (ADVANCED EFFICIENCY)	
	2	1	**164-6709**	1	PLUG AS	
		1	**3J-1907**	1	SEAL-O-RING	
		1	**5F-9144**	1	SEAL-O-RING	

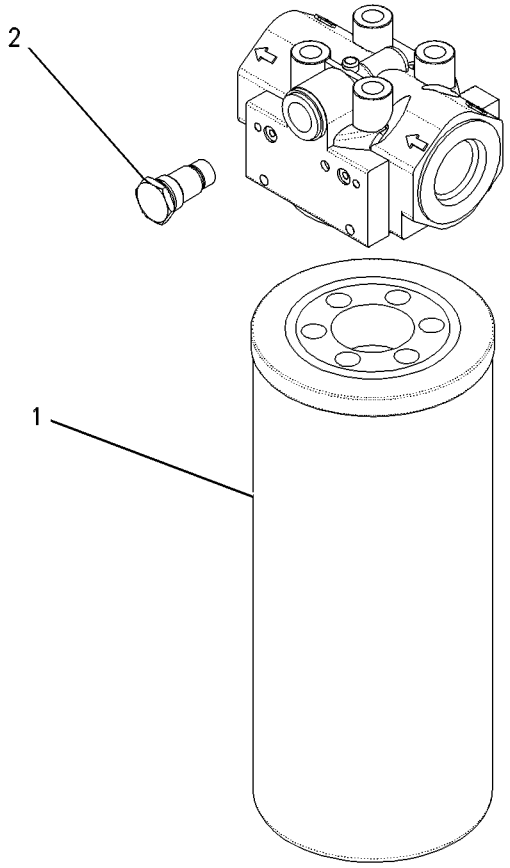

GRAPHIC #1 **<END>** g00545272

HYDRAULIC SYSTEM

287-8402 FILTER GP-OIL

S/N: BXY4000-UP

PART OF 345-3932 LINES GP-HYDRAULIC

SMCS-5068, 5091, 5092 **i03558824**

NOTE	REF NO	GRAPHIC REF	PART NUMBER	QTY	PART NAME 1 2 3 4 5 6 (PRODUCT LEVEL)	SEE PAGE
	1	1	**102-2828**	1	FILTER-OIL (ULTRA HIGH EFFICIENCY)	
	2	1	**339-4361**	1	SWITCH AS-PRESSURE (FILTER BYPASS)	
		1	**102-8802**	1	KIT-RECEPTACLE (2-PIN)	
					(INCLUDES RECEPTACLE AS & WEDGE)	
		1	**186-3735**	2	PIN-CONNECTOR (16-GA TO 18-GA)	
E		1	**9X-1813**		SLEEVE (14-CM)	
	3	1	**3J-1907**	1	SEAL-O-RING	
	4	1	**5F-9144**	1	SEAL-O-RING	

E-ORDER BY THE CENTIMETER

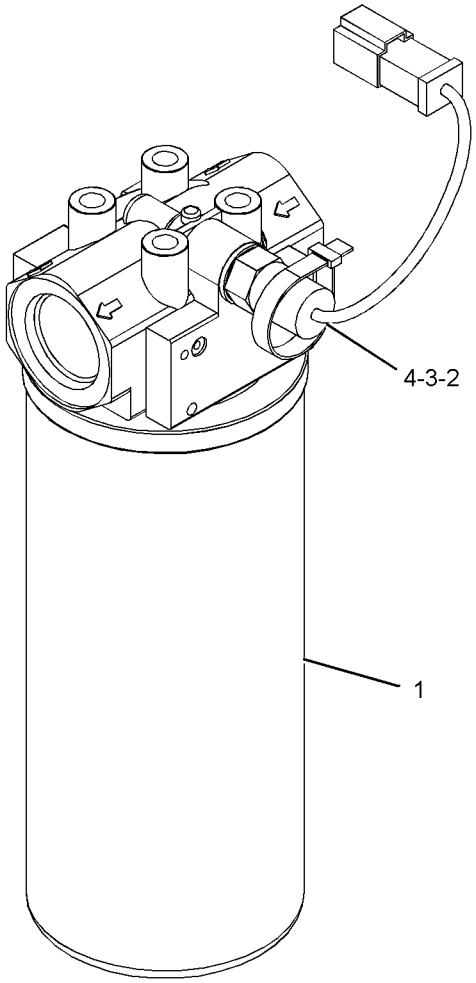

GRAPHIC #1 **<END>** g01447809

HYDRAULIC SYSTEM

253-4787 GUARD GP-TILT CYLINDER

S/N: BXY1-UP

PART OF 275-7838, 275-7840, 290-5780 HYDRAULIC AR-TILT REGENERATION

SMCS-5104, 7164 **i02463708**

NOTE	REF NO	GRAPHIC REF	PART NUMBER	QTY	PART NAME 1 2 3 4 5 6 (PRODUCT LEVEL)	SEE PAGE
	1	1	**271-4578**	1	BRACKET AS	
		1	**6W-3731**	3	SPACER (19.07X26.99X14-MM THK)	
		1	**7T-1099**	2	LINK	
	2	1	**8T-4223**	3	WASHER-HARD (13.5X25.5X3-MM THK)	
M	3	1	**8T-4956**	3	BOLT (M12X1.75X35-MM)	

M-METRIC PART

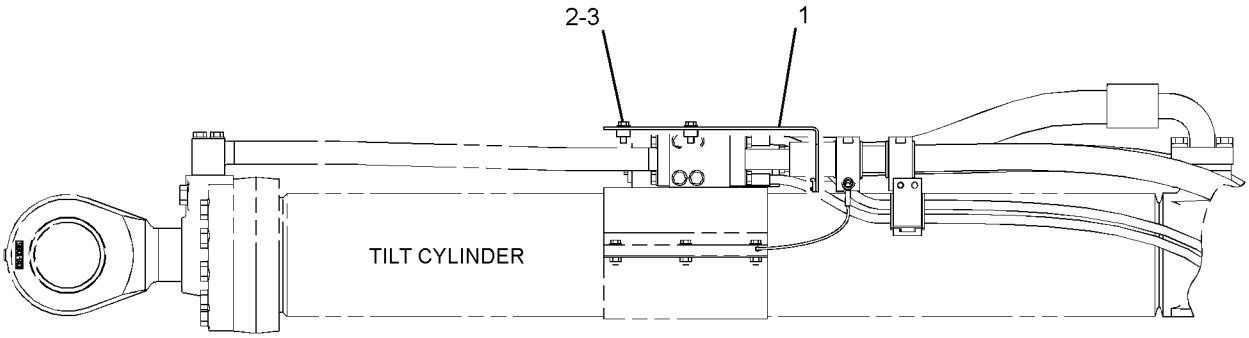

LEFT SIDE VIEW

GRAPHIC #1 **<END>** g01257988

HYDRAULIC SYSTEM

225-5449 HYDRAULIC AR

S/N: BXY1-1899

PART OF 225-4278 COMMON AR

SMCS-5051 **i02261178**

NOTE	PART NUMBER	QTY	PART NAME 1 2 3 4 5 6 (PRODUCT LEVEL)	SEE PAGE
Y	*217-7850*	1	CONTROL GP-SERVICE BRAKE (FRONT)	1290
Y	*230-2407*	1	CONTROL GP-SERVICE BRAKE (REAR)	1294
Y	*132-6140*	1	CYLINDER & MTG GP-STEERING	1332
Y	*230-2410*	1	FILTER & LINES GP-CASE DRAIN	1431
Y	*230-2400*	1	LINES GP-HYDRAULIC	1465
Y	*225-6716*	1	LINES GP-HYDRAULIC FAN	1475
Y	*132-6136*	1	LINES GP-LIFT CYLINDER	1502
Y	*225-6709*	1	LINES GP-POWER TRAIN OIL	777
Y	*247-8540*	1	LINES GP-STEERING	1346
Y	*132-6142*	1	LINES GP-STEERING NEUTRALIZER	1363
Y	*226-2040*	1	MOTOR & MTG GP-HYDRAULIC FAN	1540
Y	*230-2406*	1	PUMP & MTG GP-IMPLEMENT	1544
Y	*132-6143*	1	TANK & MTG GP-HYDRAULIC	1561

Y-SEPARATE ILLUSTRATION

<END>

298-2038 HYDRAULIC AR

S/N: BXY1900-3999

PART OF 284-2327 COMMON AR

SMCS-5051 **i03357220**

NOTE	PART NUMBER	QTY	PART NAME 1 2 3 4 5 6 (PRODUCT LEVEL)	SEE PAGE
Y	*217-7850*	1	CONTROL GP-SERVICE BRAKE (FRONT)	1290
Y	*230-2407*	1	CONTROL GP-SERVICE BRAKE (REAR)	1294
Y	*285-8674*	1	CYLINDER & MTG GP-STEERING	1333
Y	*230-2410*	1	FILTER & LINES GP-CASE DRAIN	1431
Y	*230-2400*	1	LINES GP-HYDRAULIC	1465
Y	*225-6716*	1	LINES GP-HYDRAULIC FAN	1475
Y	*132-6136*	1	LINES GP-LIFT CYLINDER	1502
Y	*297-6924*	1	LINES GP-PILOT	1509
			S/N: BXY2733-3999	
Y	*225-6709*	1	LINES GP-POWER TRAIN OIL	777
Y	*299-5838*	1	LINES GP-STEERING	1354
Y	*132-6142*	1	LINES GP-STEERING NEUTRALIZER	1363
Y	*226-2040*	1	MOTOR & MTG GP-HYDRAULIC FAN	1540
Y	*230-2406*	1	PUMP & MTG GP-IMPLEMENT	1544
Y	*132-6143*	1	TANK & MTG GP-HYDRAULIC	1561

Y-SEPARATE ILLUSTRATION

<END>

HYDRAULIC SYSTEM

345-3930 HYDRAULIC AR

S/N: BXY4000-UP

PART OF 284-2327 COMMON AR

SMCS-5051 **i03748088**

NOTE	PART NUMBER	QTY	PART NAME 1 2 3 4 5 6 (PRODUCT LEVEL)	SEE PAGE
Y	*315-8755*	1	CONTROL GP-SERVICE BRAKE (FRONT)	1309
Y	*345-3934*	1	CONTROL GP-SERVICE BRAKE	1311
Y	*285-8674*	1	CYLINDER & MTG GP-STEERING	1333
Y	**173-8612**	1	CYLINDER GP-LIFT (RH)	1422
Y	**173-8613**	1	CYLINDER GP-LIFT (LH)	1423
Y	*345-3935*	1	FILTER & LINES GP-CASE DRAIN	1437
Y	*345-3932*	1	LINES GP-HYDRAULIC	1470
Y	*225-6716*	1	LINES GP-HYDRAULIC FAN	1475
Y	*345-3931*	1	LINES GP-LIFT CYLINDER	1505
Y	*315-8805*	1	LINES GP-PILOT	1513
Y	*345-3936*	1	LINES GP-POWER TRAIN OIL	805
Y	*345-3943*	1	LINES GP-STEERING	1359
Y	*132-6142*	1	LINES GP-STEERING NEUTRALIZER	1363
Y	*226-2040*	1	MOTOR & MTG GP-HYDRAULIC FAN	1540
Y	*345-3933*	1	PUMP & MTG GP-IMPLEMENT	1545
Y	*132-6143*	1	TANK & MTG GP-HYDRAULIC	1561

Y-SEPARATE ILLUSTRATION

<END>

275-7838 HYDRAULIC AR-TILT REGENERATION

S/N: BXY1-UP

FIELD INSTALLATION

SMCS-1408, 5057, 512R **i03461789**

NOTE	PART NUMBER	QTY	PART NAME 1 2 3 4 5 6 (PRODUCT LEVEL)	SEE PAGE
Y	*253-4787*	1	GUARD GP-TILT CYLINDER (REGENERATION)	1442
Y	*251-3113*	1	LINES GP-PILOT (REGENERATION)	1507
Y	*296-7786*	1	LINES GP-TILT CYLINDER (REGENERATION)	1526
Y	*253-4788*	1	VALVE & MTG GP-REGENERATION (TILT CYLINDER)	1600
Y	*271-7459*	1	WIRING GP-TILT REGEN CONTROL	669

Y-SEPARATE ILLUSTRATION

<END>

275-7840 HYDRAULIC AR-TILT REGENERATION

S/N: BXY1-UP

FIELD INSTALLATION

SMCS-1408, 5057, 512R **i03323320**

NOTE	PART NUMBER	QTY	PART NAME 1 2 3 4 5 6 (PRODUCT LEVEL)	SEE PAGE
Y	*253-4787*	1	GUARD GP-TILT CYLINDER (REGENERATION)	1442
Y	*251-3113*	1	LINES GP-PILOT (REGENERATION)	1507
Y	*291-3013*	1	LINES GP-TILT CYLINDER	1525
Y	*271-4577*	1	VALVE & MTG GP-REGENERATION (TILT CYLINDER)	1601
Y	*271-7459*	1	WIRING GP-TILT REGEN CONTROL	669

Y-SEPARATE ILLUSTRATION

<END>

HYDRAULIC SYSTEM

290-5780 HYDRAULIC AR-TILT REGENERATION

S/N: BXY1-UP

FIELD INSTALLATION

SMCS-1408, 5057, 512R **i03331381**

NOTE	PART NUMBER	QTY	PART NAME 1 2 3 4 5 6 (PRODUCT LEVEL)	SEE PAGE
Y	*253-4787*	1	GUARD GP-TILT CYLINDER (REGENERATION)	1442
Y	*251-3113*	1	LINES GP-PILOT (REGENERATION)	1507
Y	*322-3152*	1	LINES GP-TILT CYLINDER	1537
Y	*253-4788*	1	VALVE & MTG GP-REGENERATION (TILT CYLINDER)	1600
Y	*271-7459*	1	WIRING GP-TILT REGEN CONTROL	669

Y-SEPARATE ILLUSTRATION

<END>

HYDRAULIC SYSTEM

201-0377 LINES GP-FRONT

S/N: BXY1-UP
PART OF 255-0043 LIFT AR
AN ATTACHMENT

SMCS-5057 **i01795151**

NOTE	REF NO	GRAPHIC REF	PART NUMBER	QTY	PART NAME 1 2 3 4 5 6 (PRODUCT LEVEL)	SEE PAGE
C	1	2	**7I-8640**	12	CLAMP-HALF	
	2	1	**174-0830**	1	TUBE AS	
	3	1	**174-0831**	1	TUBE AS	
	4	1	**174-0832**	1	TUBE AS	
I	5	1	**174-0833**	1	HOSE AS	
	6	2	**174-2435**	1	BRACKET AS	
	7	2	**188-7007**	1	BRACKET AS	
	8	1	**200-5254**	2	BRACKET AS	
I	9	1	**212-6862**	1	HOSE AS	
C	10	2	**217-0641**	1	TUBE AS	
C	11	2	**217-0642**	1	TUBE AS	
C	12	2	**217-0643**	2	BRACKET AS	
	13	1	**103-1303**	8	CLAMP-HALF	
C	14	2	**117-8704**	1	PLATE	
	15	1	**1P-3704**	2	SEAL-RECTANGULAR	
	16	1	**1P-3705**	2	SEAL-RECTANGULAR	
	17	1	**1P-3706**	3	SEAL-RECTANGULAR	
	18	1,2	**1P-5767**	8	FLANGE-HALF	
	19	1	**5P-8077**	4	FLANGE-HALF	
CM	20	1,2	**7X-2553**	18	BOLT (M16X2X40-MM)	
M	21	1	**7X-2556**	8	BOLT (M16X2X100-MM)	
CM	22	1,2	**8T-4140**	10	BOLT (M16X2X60-MM)	
M	23	1	**8T-4193**	4	BOLT (M16X2X50-MM)	
M	24	1,2	**8T-4194**	16	BOLT (M12X1.75X50-MM)	
	25	1,2	**8T-4223**	16	WASHER-HARD (13.5X25.5X3-MM THK)	
CM	26	1,2	**8T-4779**	12	BOLT (M16X2X35-MM)	
C	27	1,2	**9X-8257**	52	WASHER (17.5X30X3.5-MM THK)	

C-CHANGE FROM PREVIOUS TYPE
I-REFER TO HYDRAULIC INFORMATION SYSTEM
M-METRIC PART

201-0377 **LINES GP-FRONT** *(contd.)* **i01795151**

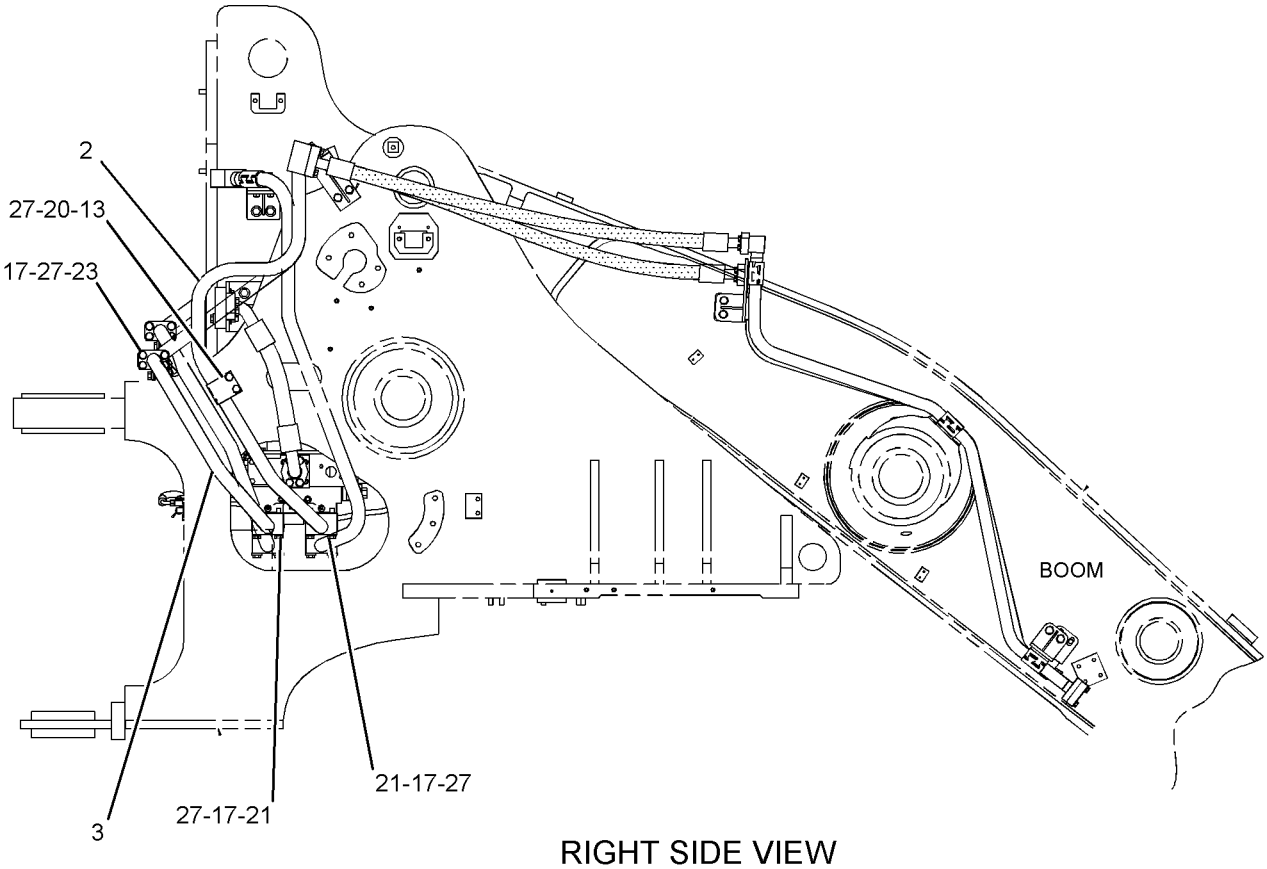

RIGHT SIDE VIEW

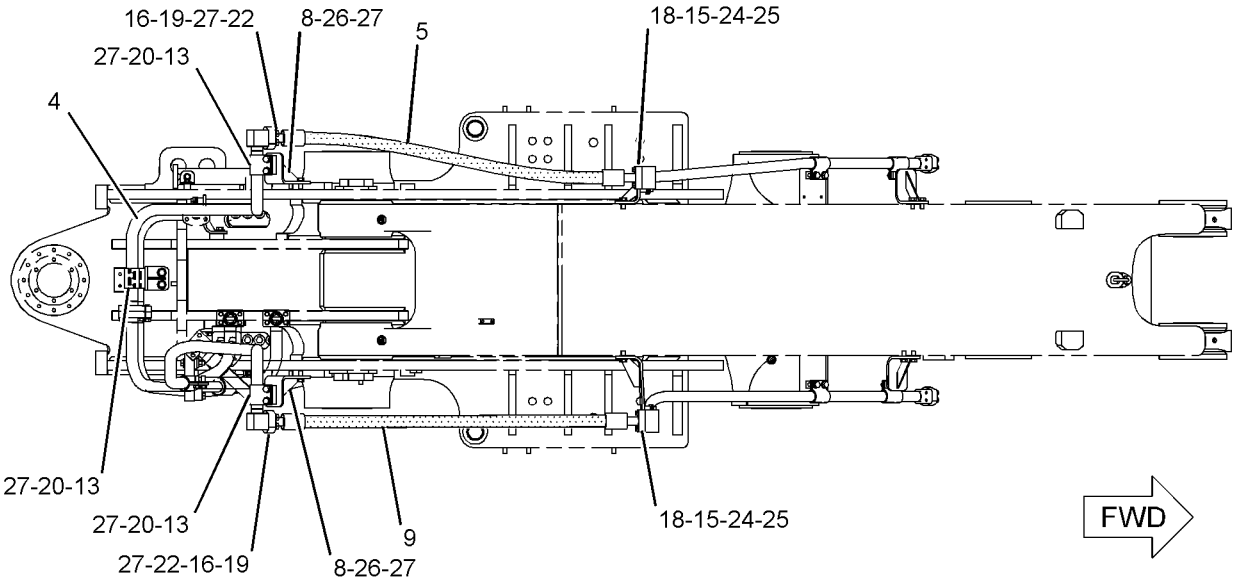

TOP VIEW

GRAPHIC #1 g01023978

201-0377 **LINES GP-FRONT** *(contd.)* **i01795151**

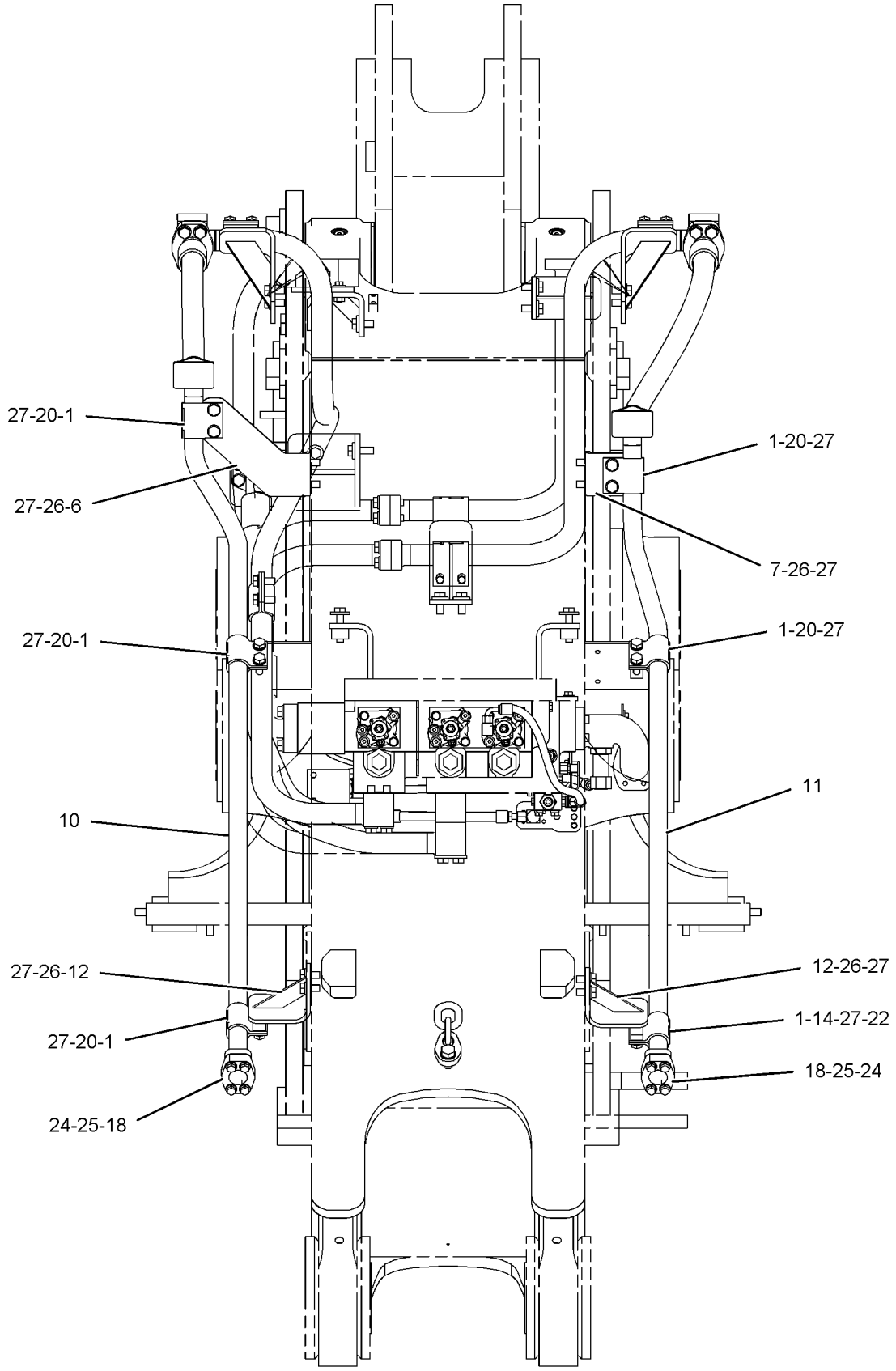

FRONT VIEW

GRAPHIC #2 **<END>** g01023979

HYDRAULIC SYSTEM

246-6923 LINES GP-FRONT

S/N: BXY1-UP
PART OF 255-0041 LIFT AR
AN ATTACHMENT

SMCS-5057 **i02224929**

NOTE	REF NO	GRAPHIC REF	PART NUMBER	QTY	PART NAME 1 2 3 4 5 6 (PRODUCT LEVEL)	SEE PAGE
	1	1,2	**7I-8640**	12	CLAMP-HALF	
	2	1	**174-0830**	1	TUBE AS	
	3	1	**174-0831**	1	TUBE AS	
	4	1	**174-0832**	1	TUBE AS	
I	5	1	**174-0833**	1	HOSE AS	
	6	2	**174-2435**	1	BRACKET AS	
	7	2	**188-7007**	1	BRACKET AS	
	8	1	**200-5254**	2	BRACKET AS	
I	9	1	**212-6862**	1	HOSE AS	
	10	1	**246-2305**	1	TUBE AS	
	11	1	**246-2321**	1	TUBE AS	
	12	1	**103-1303**	8	CLAMP-HALF	
	13	2	**128-9341**	2	BLOCK	
	14	2	**1P-3704**	2	SEAL-RECTANGULAR	
	15	1	**1P-3705**	2	SEAL-RECTANGULAR	
	16	1	**1P-3706**	3	SEAL-RECTANGULAR	
	17	2	**1P-5767**	8	FLANGE-HALF	
	18	1	**5P-8077**	4	FLANGE-HALF	
M	19	1	**7X-2553**	16	BOLT (M16X2X40-MM)	
M	20	1	**7X-2556**	8	BOLT (M16X2X100-MM)	
M	21	1,2	**8T-4140**	12	BOLT (M16X2X60-MM)	
M	22	1	**8T-4193**	4	BOLT (M16X2X50-MM)	
M	23	2	**8T-4194**	16	BOLT (M12X1.75X50-MM)	
	24	2	**8T-4223**	16	WASHER-HARD (13.5X25.5X3-MM THK)	
M	25	1,2	**8T-4779**	8	BOLT (M16X2X35-MM)	
	26	1,2	**9X-8257**	48	WASHER (17.5X30X3.5-MM THK)	

I-REFER TO HYDRAULIC INFORMATION SYSTEM
M-METRIC PART

246-6923 **LINES GP-FRONT** *(contd.)* **i02224929**

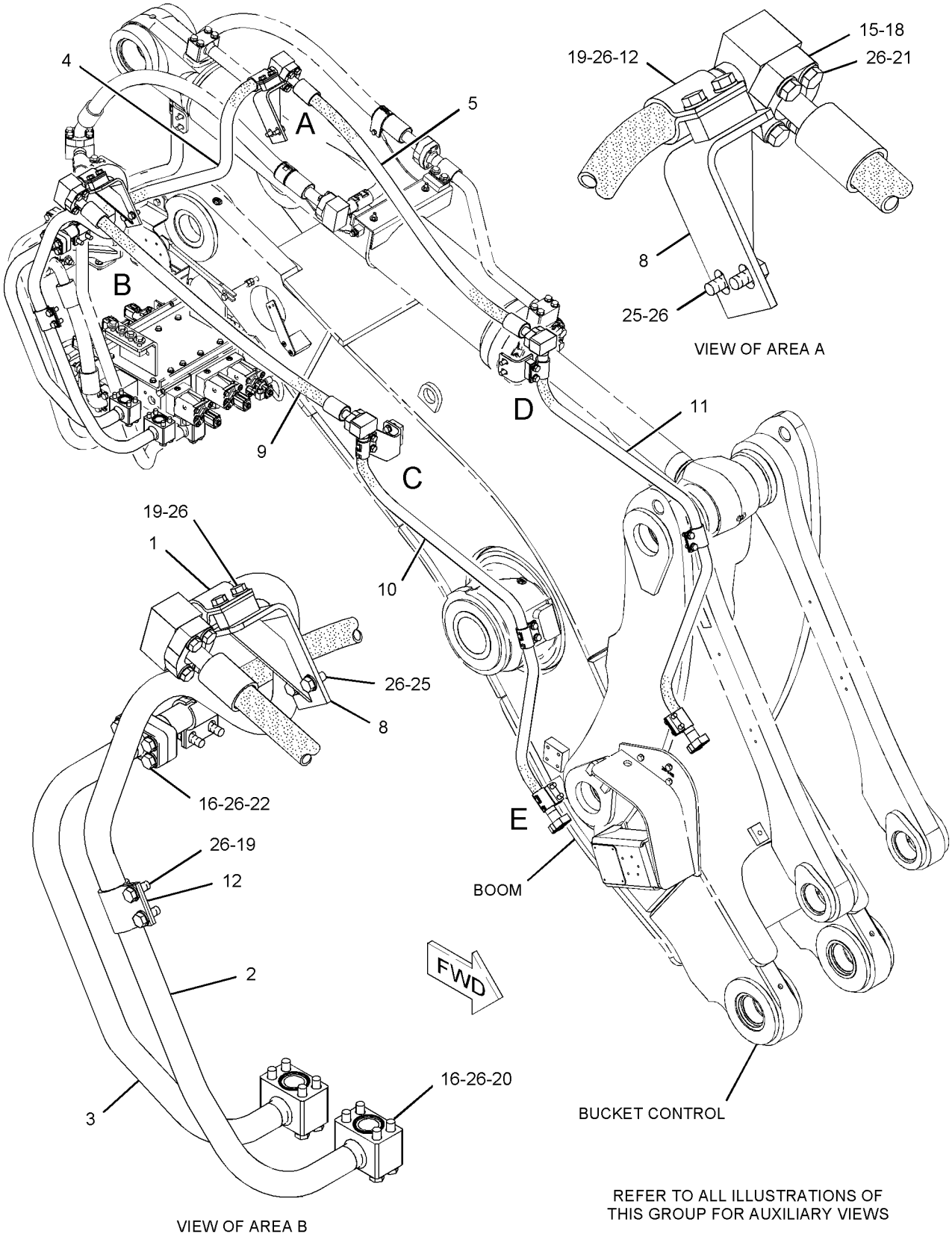

GRAPHIC #1 g01127993

246-6923 **LINES GP-FRONT** *(contd.)* **i02224929**

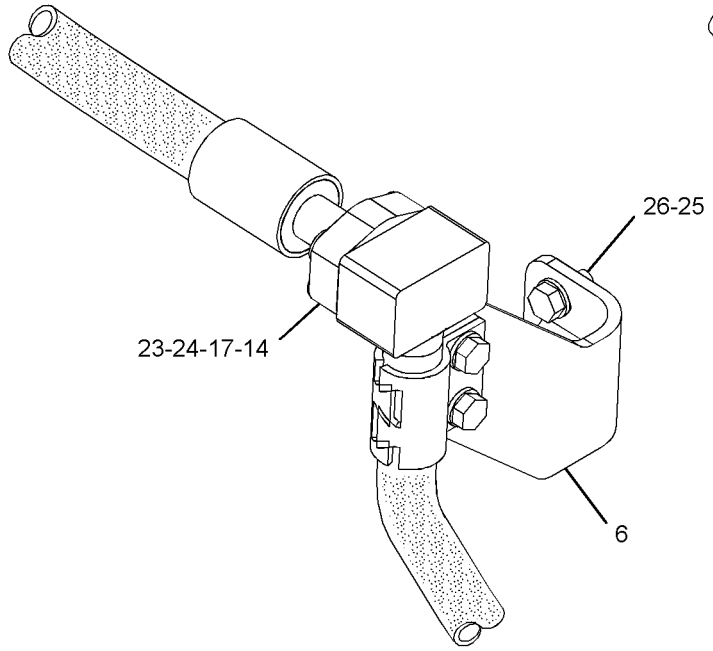

VIEW OF AREA C

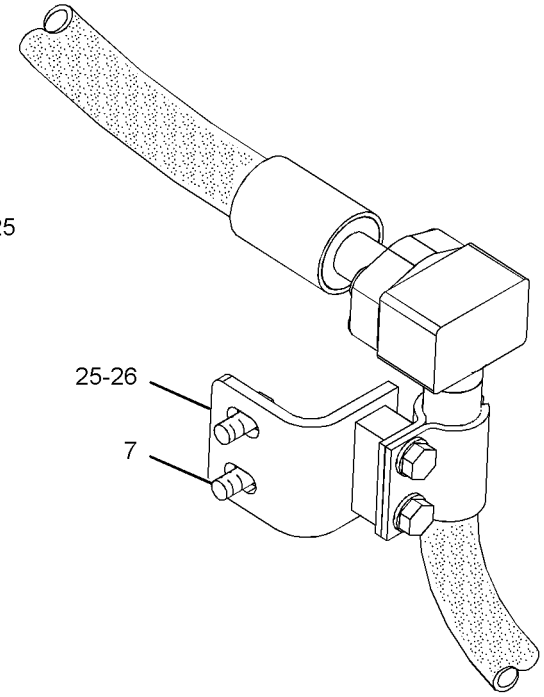

VIEW OF AREA D

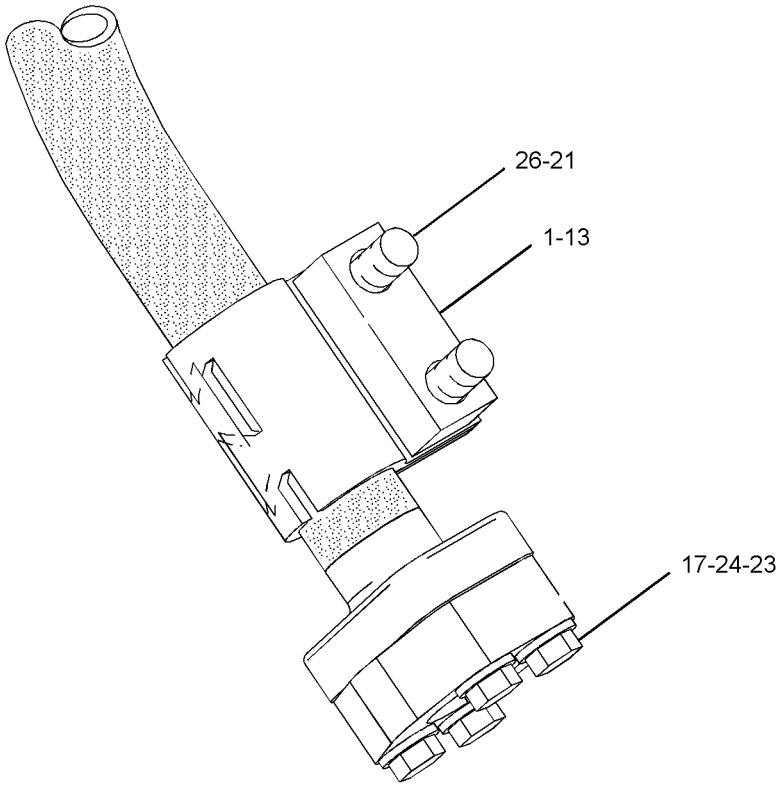

VIEW OF AREA E

GRAPHIC #2 **<END>** g01128324

HYDRAULIC SYSTEM

298-2502 LINES GP-FRONT

S/N: BXY2733-3999
PART OF 298-6963 LIFT AR
AN ATTACHMENT

SMCS-5057 **i03362223**

NOTE	REF NO	GRAPHIC REF	PART NUMBER	QTY	PART NAME 1 2 3 4 5 6 (PRODUCT LEVEL)	SEE PAGE
	1	1,2	**7I-8640**	12	CLAMP-HALF	
I	2	2	**174-0833**	1	HOSE AS	
	3	1	**174-2435**	1	BRACKET AS	
	4	2	**188-7007**	1	BRACKET AS	
	5	2	**200-5254**	2	BRACKET AS	
I	6	2	**212-6862**	1	HOSE AS	
	7	1	**246-2305**	1	TUBE AS	
	8	1	**246-2321**	1	TUBE AS	
	9	1	**298-2497**	1	TUBE AS	
	10	1	**298-2498**	1	TUBE AS	
	11	1	**321-5981**	1	TUBE AS	
	12	1,2	**103-1303**	8	CLAMP-HALF	
	14	1,2	**1P-3704**	2	SEAL-RECTANGULAR	
	15	2	**1P-3705**	2	SEAL-RECTANGULAR	
	16	1	**1P-3706**	3	SEAL-RECTANGULAR	
	17	1,2	**1P-5767**	8	FLANGE-HALF	
	18	2	**5P-8077**	4	FLANGE-HALF	
M	19	1,2	**7X-2553**	16	BOLT (M16X2X40-MM)	
M	20	1	**7X-2556**	8	BOLT (M16X2X100-MM)	
M	21	1,2	**8T-4140**	16	BOLT (M16X2X60-MM)	
M	22	1,2	**8T-4194**	16	BOLT (M12X1.75X50-MM)	
	23	1,2	**8T-4223**	16	WASHER-HARD (13.5X25.5X3-MM THK)	
M	24	1,2	**8T-4779**	8	BOLT (M16X2X35-MM)	
	25	1,2	**9X-8257**	48	WASHER (17.5X30X3.5-MM THK)	

I-REFER TO HYDRAULIC INFORMATION SYSTEM
M-METRIC PART

298-2502 **LINES GP-FRONT** *(contd.)* **i03362223**

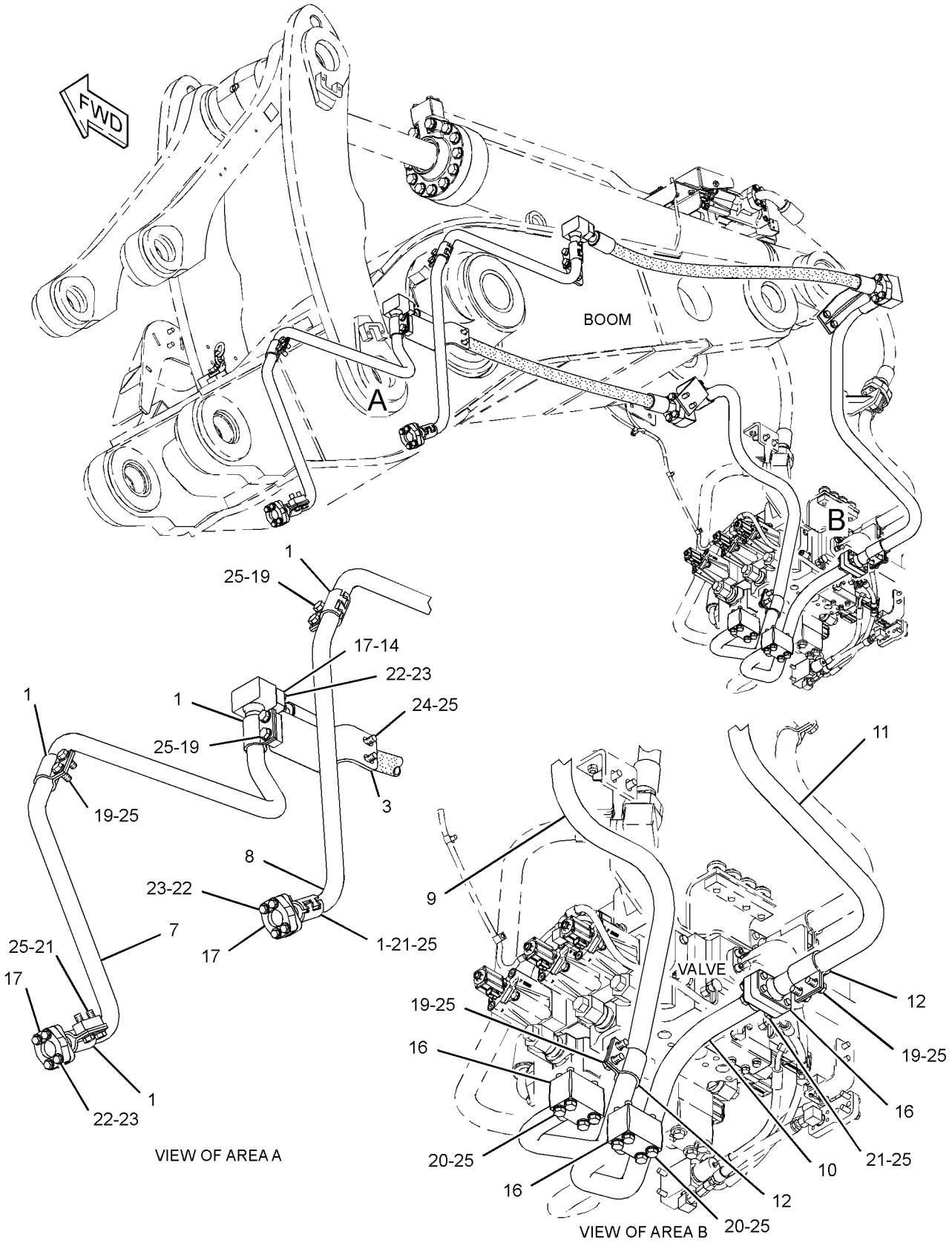

GRAPHIC #1 g01757113

298-2502 **LINES GP-FRONT** *(contd.)* **i03362223**

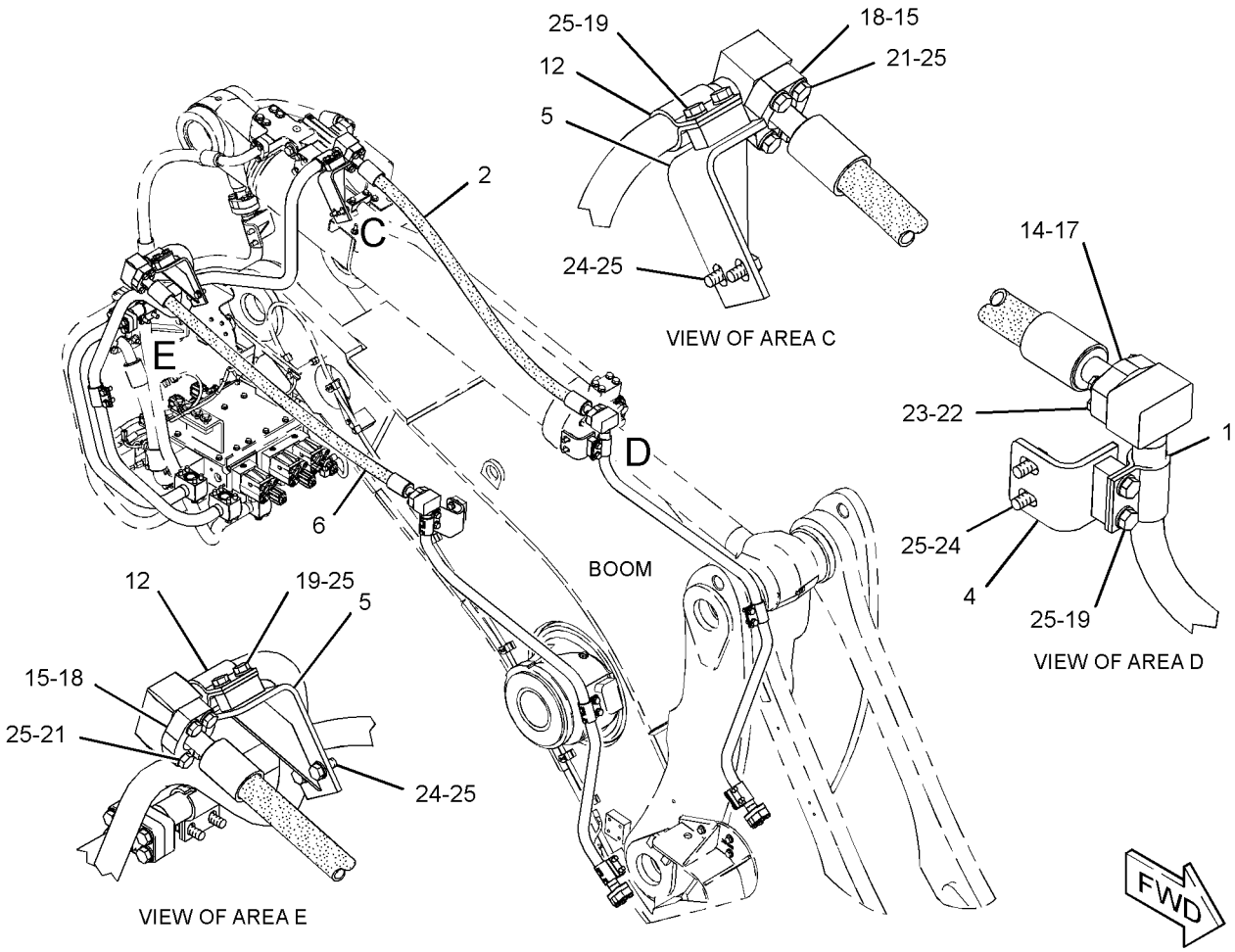

GRAPHIC #2 **<END>** g01748935

HYDRAULIC SYSTEM

298-2503 LINES GP-FRONT

S/N: BXY2733-3999
PART OF 298-6965 LIFT AR
AN ATTACHMENT

SMCS-5057 **i03364483**

NOTE	REF NO	GRAPHIC REF	PART NUMBER	QTY	PART NAME 1 2 3 4 5 6 (PRODUCT LEVEL)	SEE PAGE
	1	2	**7I-8640**	12	CLAMP-HALF	
I	2	1	**174-0833**	1	HOSE AS	
	3	2	**174-2435**	1	BRACKET AS	
	4	2	**188-7007**	1	BRACKET AS	
	5	1	**200-5254**	2	BRACKET AS	
I	6	1	**212-6862**	1	HOSE AS	
	7	2	**217-0641**	1	TUBE AS	
	8	2	**217-0642**	1	TUBE AS	
	9	2	**217-0643**	2	BRACKET AS	
	10	1	**298-2497**	1	TUBE AS	
	11	1	**298-2498**	1	TUBE AS	
	12	1	**321-5981**	1	TUBE AS	
	13	1	**103-1303**	8	CLAMP-HALF	
	14	2	**117-8704**	1	PLATE	
	15	1	**1P-3704**	2	SEAL-RECTANGULAR	
	16	1	**1P-3705**	2	SEAL-RECTANGULAR	
	17	1	**1P-3706**	3	SEAL-RECTANGULAR	
	18	1,2	**1P-5767**	8	FLANGE-HALF	
	19	1	**5P-8077**	4	FLANGE-HALF	
M	20	1,2	**7X-2553**	18	BOLT (M16X2X40-MM)	
M	21	1	**7X-2556**	8	BOLT (M16X2X100-MM)	
M	22	1,2	**8T-4140**	14	BOLT (M16X2X60-MM)	
M	23	1,2	**8T-4194**	16	BOLT (M12X1.75X50-MM)	
	24	1,2	**8T-4223**	16	WASHER-HARD (13.5X25.5X3-MM THK)	
M	25	1,2	**8T-4779**	12	BOLT (M16X2X35-MM)	
	26	1,2	**9X-8257**	52	WASHER (17.5X30X3.5-MM THK)	

I-REFER TO HYDRAULIC INFORMATION SYSTEM
M-METRIC PART

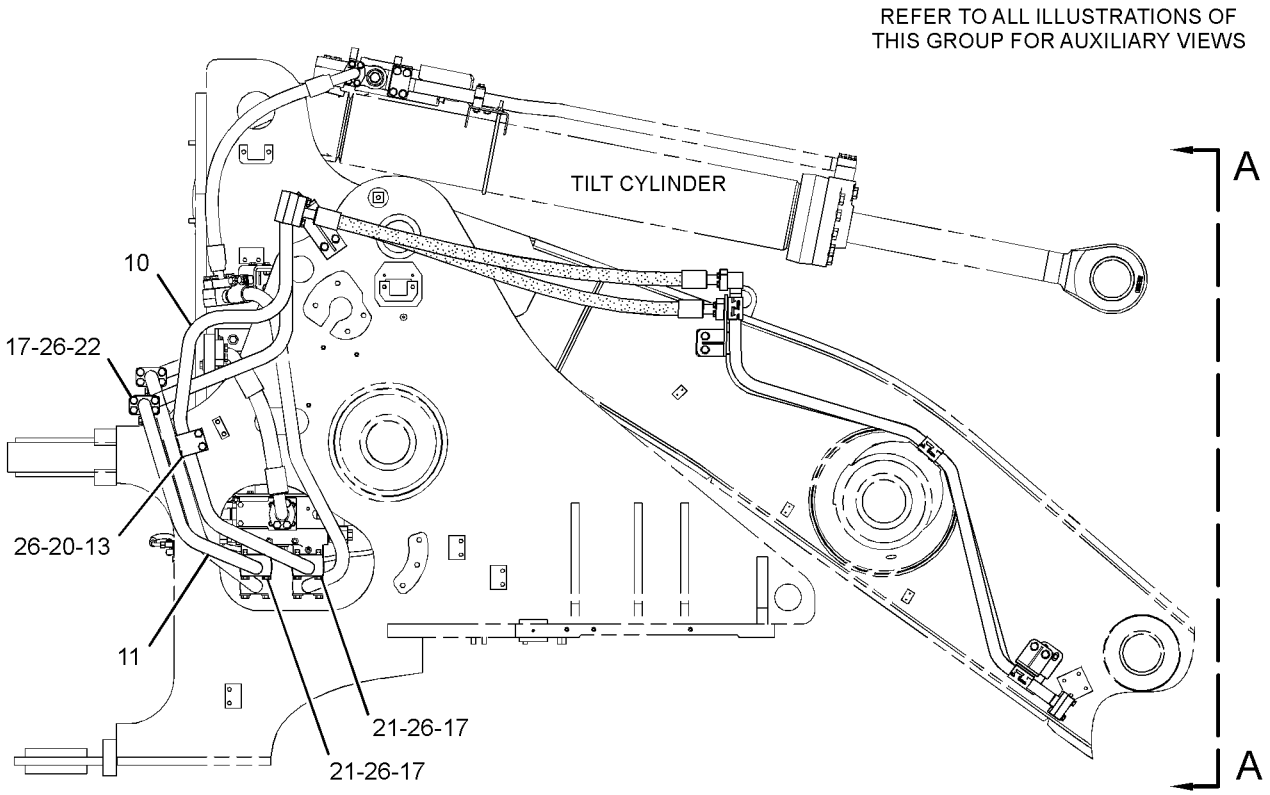

RIGHT SIDE VIEW

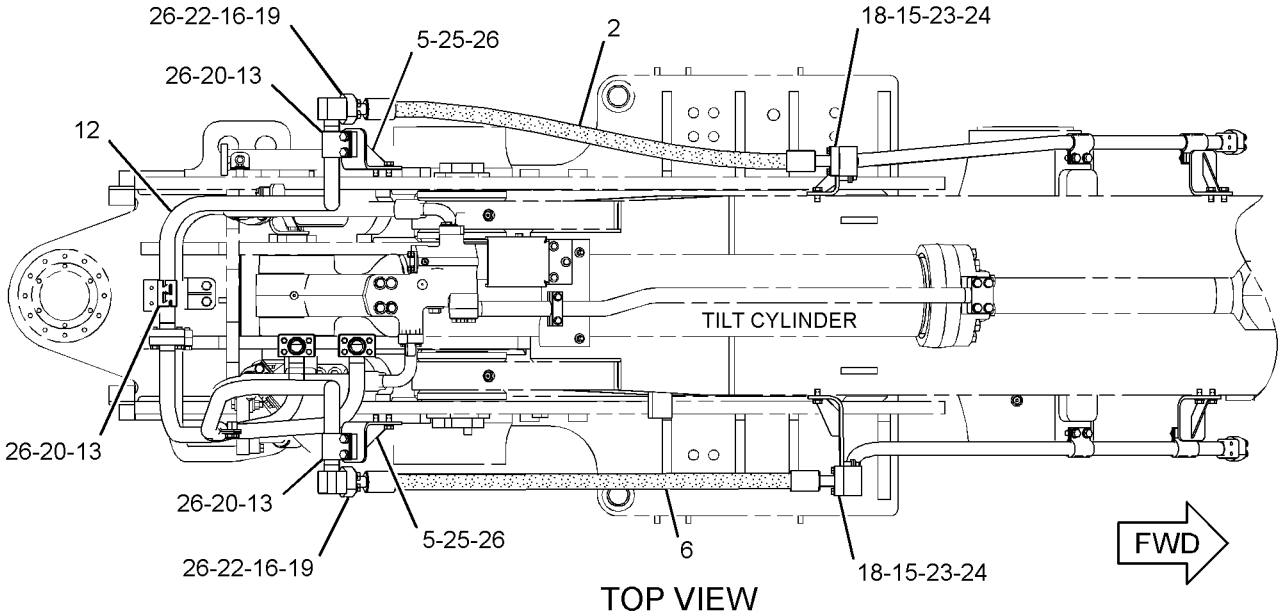

TOP VIEW

GRAPHIC #1 g01904873

298-2503 **LINES GP-FRONT** *(contd.)* **i03364483**

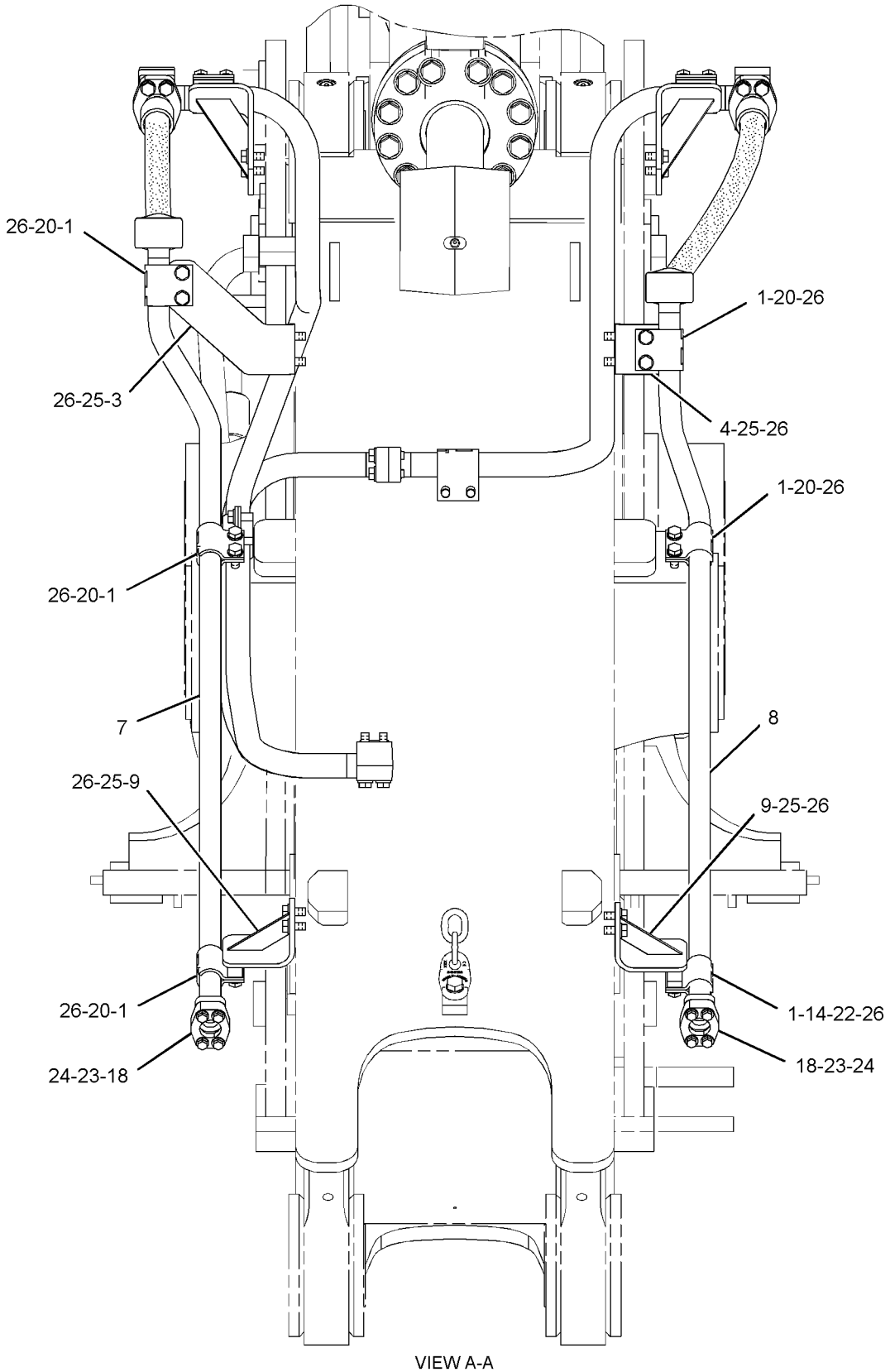

GRAPHIC #2 **<END>** g01904874

HYDRAULIC SYSTEM

315-8825 LINES GP-FRONT

S/N: BXY4000-UP
PART OF 298-6963 LIFT AR
AN ATTACHMENT

SMCS-5057 **i03765165**

NOTE	REF NO	GRAPHIC REF	PART NUMBER	QTY	PART NAME 1 2 3 4 5 6 (PRODUCT LEVEL)	SEE PAGE
	1	1	**7I-8640**	12	CLAMP-HALF	
I	2	1	**174-0833**	1	HOSE AS	
	3	1	**174-2435**	1	BRACKET AS	
	4	1	**188-7007**	1	BRACKET AS	
	5	1	**200-5254**	1	BRACKET AS	
I	6	1	**212-6862**	1	HOSE AS	
	7	1	**246-2305**	1	TUBE AS	
	8	1	**246-2321**	1	TUBE AS	
	9	1	**298-2498**	1	TUBE AS	
	10	1	**315-8759**	1	BRACKET AS	
	11	1	**315-8761**	1	TUBE AS	
	12	1	**321-5981**	1	TUBE AS	
	13	1	**103-1303**	6	CLAMP-HALF	
	14	1	**128-9341**	2	BLOCK	
	15	1	**1P-3704**	2	SEAL-RECTANGULAR	
	16	1	**1P-3705**	2	SEAL-RECTANGULAR	
	17	1	**1P-3706**	3	SEAL-RECTANGULAR	
	18	1	**1P-5767**	8	FLANGE-HALF	
	19	1	**5P-8077**	4	FLANGE-HALF	
M	20	1	**7X-2553**	14	BOLT (M16X2X40-MM)	
M	21	1	**7X-2554**	4	BOLT (M16X2X70-MM)	
M	22	1	**7X-2556**	8	BOLT (M16X2X100-MM)	
M	23	1	**8T-4140**	12	BOLT (M16X2X60-MM)	
M	24	1	**8T-4194**	16	BOLT (M12X1.75X50-MM)	
	25	1	**8T-4223**	16	WASHER-HARD (13.5X25.5X3-MM THK)	
M	26	1	**8T-4779**	8	BOLT (M16X2X35-MM)	
	27	1	**9X-8257**	46	WASHER (17.5X30X3.5-MM THK)	

I-REFER TO HYDRAULIC INFORMATION SYSTEM
M-METRIC PART

315-8825 **LINES GP-FRONT** *(contd.)* **i03765165**

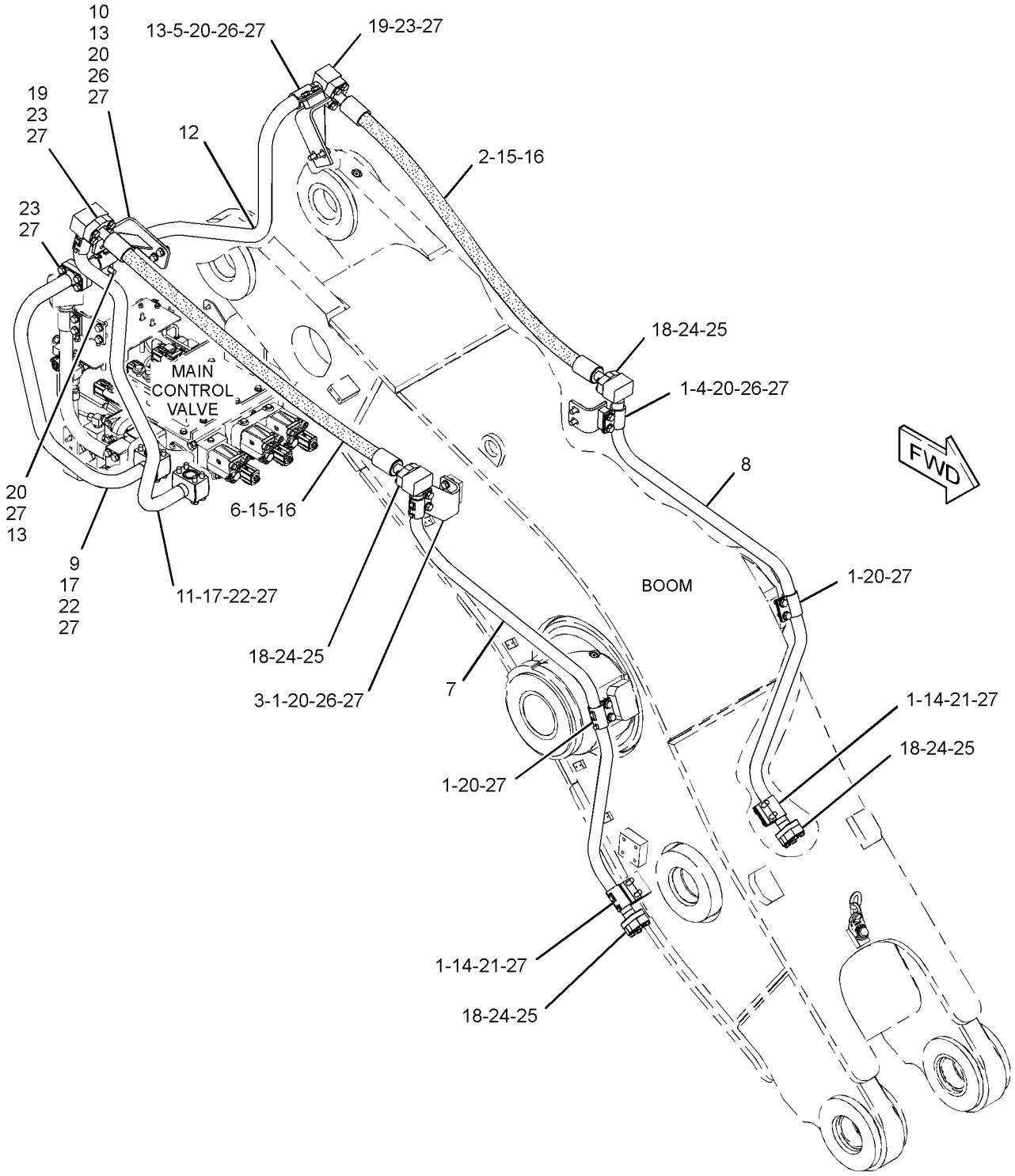

GRAPHIC #1 **<END>** g02031733

HYDRAULIC SYSTEM

315-8840 LINES GP-FRONT

S/N: BXY4000-UP
PART OF 298-6965 LIFT AR
AN ATTACHMENT

SMCS-5057 **i03765160**

NOTE	REF NO	GRAPHIC REF	PART NUMBER	QTY	PART NAME 1 2 3 4 5 6 (PRODUCT LEVEL)	SEE PAGE
	1	1	**7I-8640**	12	CLAMP-HALF	
I	2	1	**174-0833**	1	HOSE AS	
	3	1	**174-2435**	1	BRACKET AS	
	4	1	**188-7007**	1	BRACKET AS	
	5	1	**200-5254**	1	BRACKET AS	
I	6	1	**212-6862**	1	HOSE AS	
	7	1	**217-0641**	1	TUBE AS	
	8	1	**217-0642**	1	TUBE AS	
	9	1	**217-0643**	2	BRACKET AS	
	10	1	**298-2498**	1	TUBE AS	
	11	1	**315-8759**	1	BRACKET AS	
	12	1	**315-8761**	1	TUBE AS	
	13	1	**321-5981**	1	TUBE AS	
	14	1	**103-1303**	6	CLAMP-HALF	
	15	1	**117-8704**	1	PLATE	
	16	1	**1P-3704**	2	SEAL-RECTANGULAR	
	17	1	**1P-3705**	2	SEAL-RECTANGULAR	
	18	1	**1P-3706**	3	SEAL-RECTANGULAR	
	19	1	**1P-5767**	8	FLANGE-HALF	
	20	1	**5P-8077**	4	FLANGE-HALF	
M	21	1	**7X-2553**	16	BOLT (M16X2X40-MM)	
M	22	1	**7X-2556**	8	BOLT (M16X2X100-MM)	
M	23	1	**8T-4140**	14	BOLT (M16X2X60-MM)	
M	24	1	**8T-4194**	16	BOLT (M12X1.75X50-MM)	
	25	1	**8T-4223**	16	WASHER-HARD (13.5X25.5X3-MM THK)	
M	26	1	**8T-4779**	12	BOLT (M16X2X35-MM)	
	27	1	**9X-8257**	50	WASHER (17.5X30X3.5-MM THK)	

I-REFER TO HYDRAULIC INFORMATION SYSTEM
M-METRIC PART

315-8840 **LINES GP-FRONT** *(contd.)* **i03765160**

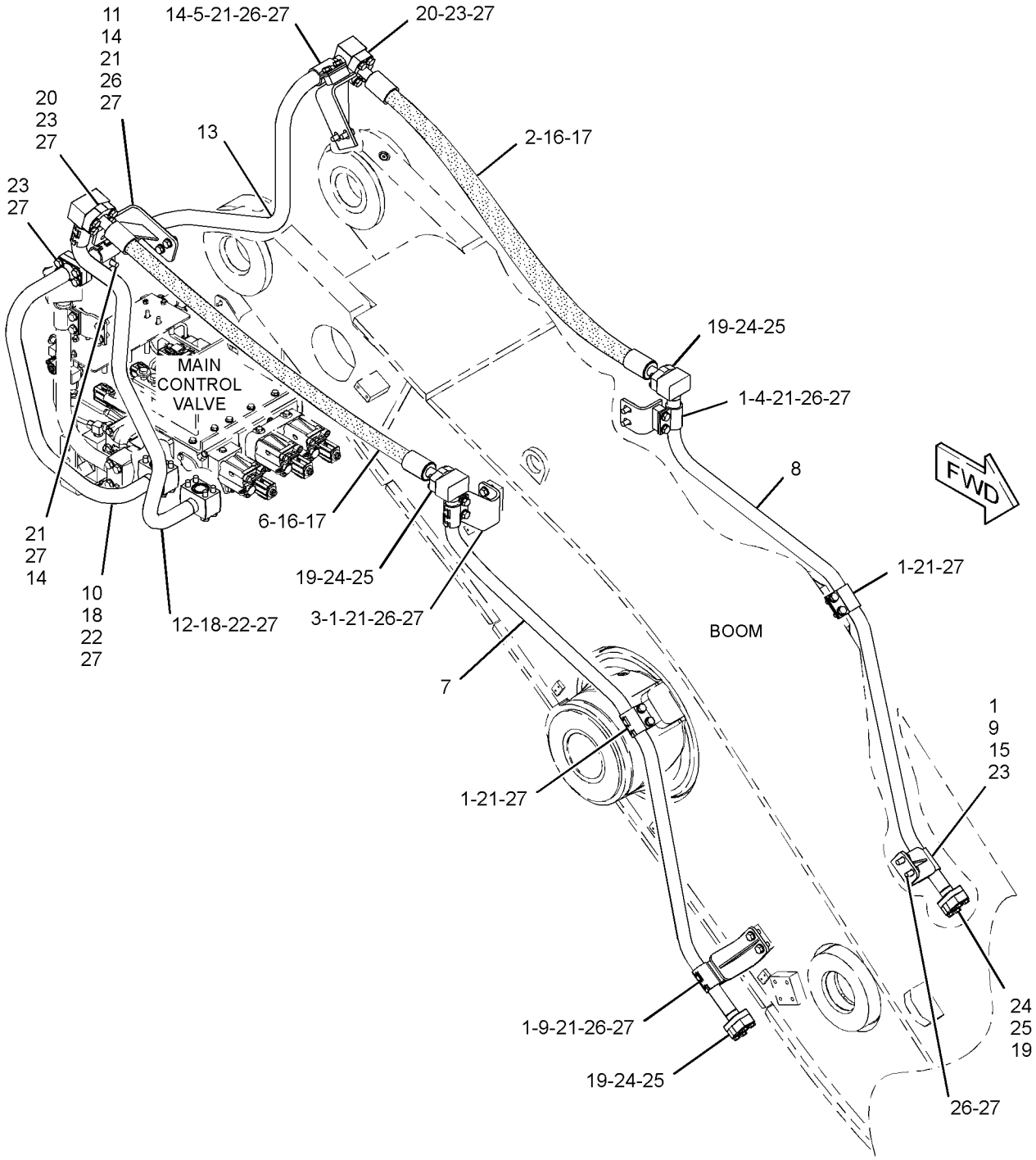

GRAPHIC #1 **<END>** g02033096

HYDRAULIC SYSTEM

189-7250 LINES GP-HYDRAULIC

S/N: BXY1900-UP

PART OF 227-3317 CONVERSION GP-HYDRAULIC LINES, 329-8109 INSULATION GP-HEAT AN ATTACHMENT

SMCS-5057 **i02788149**

NOTE	PART NUMBER	QTY	PART NAME 1 2 3 4 5 6 (PRODUCT LEVEL)	SEE PAGE
I	**227-3216**	1	HOSE AS	
	189-7144	1	HOSE AS	
	189-7145	1	HOSE AS	
	189-7146	1	HOSE AS	
	189-7147	1	HOSE AS	
	189-7148	1	HOSE AS	

I-REFER TO HYDRAULIC INFORMATION SYSTEM

<END>

189-7259 LINES GP-HYDRAULIC—MAIN CONTROL VALVE

S/N: BXY1900-UP

PART OF 227-3317 CONVERSION GP-HYDRAULIC LINES

AN ATTACHMENT

SMCS-5057 **i03248407**

NOTE	REF NO	GRAPHIC REF	PART NUMBER	QTY	PART NAME 1 2 3 4 5 6 (PRODUCT LEVEL)	SEE PAGE
I	1	1	**189-7165**	1	HOSE AS	
I	2	1	**189-7166**	1	HOSE AS	
I	3	1	**189-7167**	1	HOSE AS	
I	4	1	**189-7168**	1	HOSE AS	
	5	1	**189-7169**	1	HOSE AS	
I	6	1	**299-9482**	1	HOSE AS	

I-REFER TO HYDRAULIC INFORMATION SYSTEM

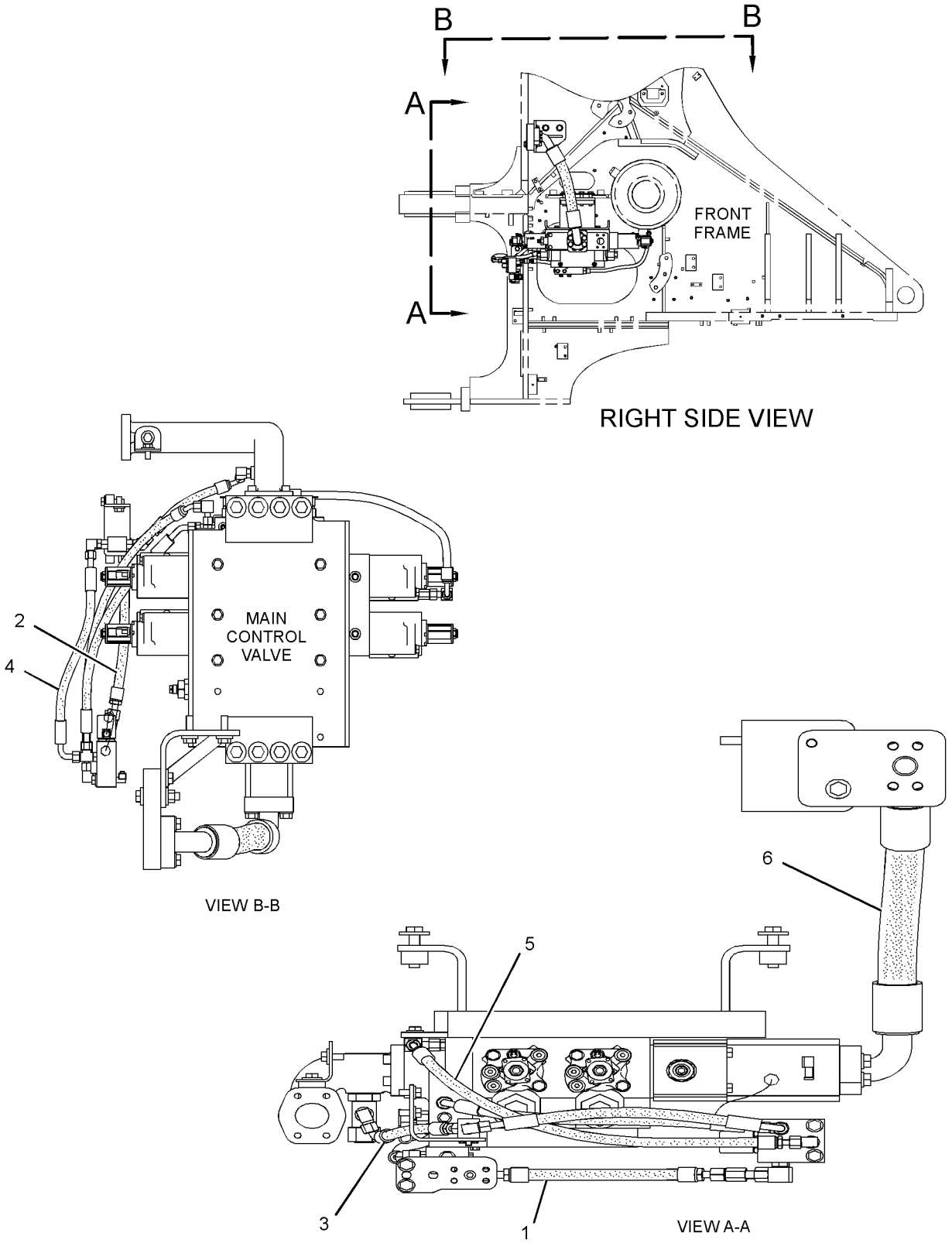

GRAPHIC #1 **<END>** g01858114

HYDRAULIC SYSTEM

230-2400 LINES GP-HYDRAULIC

S/N: BXY1-3999

PART OF 225-5449, 298-2038 HYDRAULIC AR

SMCS-5057 **i02908863**

NOTE	REF NO	GRAPHIC REF	PART NUMBER	QTY	PART NAME 1 2 3 4 5 6 (PRODUCT LEVEL)	SEE PAGE
I	1	2	**4E-3447**	1	HOSE AS	
	2	1,2	**6V-0852**	2	CAP-DUST	
	3	2	**8C-3451**	1	CAP-DUST	
	4	1	**8T-4986**	12	CLAMP-HOSE	
I	5	2	**9C-1079**	1	HOSE AS	
Y	6	2	**115-2129**	1	FILTER GP-OIL (STEERING, IMPLEMENT PILOT)	1439
I	7	2	**126-0197**	1	HOSE AS	
	8	1	**127-4667**	1	STRIP AS	
	9	2	**138-4049**	1	BRACKET AS	
	10	1	**141-7405**	2	HOSE	
	11	2	**152-3870**	1	TANK AS	
	12	1	**152-5713**	1	TUBE AS	
	13	2	**152-5714**	1	TUBE AS	
	14	2	**152-5715**	1	TUBE AS	
	15	1	**152-5716**	1	HOSE	
	16	2	**155-9461**	1	TUBE AS	
I	17	1	**155-9462**	1	HOSE AS	
	18	1,2	*164-5567*	2	COUPLER AS-QUICK DISCONNECT	
					(EACH INCLUDES)	
		1,2	**3J-1907**	1	SEAL-O-RING	
		1,2	**6V-3965**	1	FITTING (QUICK DISCONNECT)	
	19	2	*164-5611*	1	TEE AS	
		2	**6V-9746**	1	SEAL-O-RING	
		2	**7M-8485**	1	SEAL-O-RING	
		2	**8T-3312**	1	TEE	
	20	2	*169-5862*	1	ELBOW AS	
		2	**3J-1907**	1	SEAL-O-RING	
		2	**8C-6712**	1	ELBOW	
	21	1,2	**177-4155**	3	FLANGE	
	22	1	**179-6791**	1	MANIFOLD	
I	23	1	**179-6792**	1	HOSE AS	
I	24	1	**179-6793**	1	HOSE AS	
	25	1	**179-6794**	1	PLATE AS	
	26	1	**183-3626**	1	BRACKET AS	
I	27	1	**183-4491**	1	HOSE AS	
Y	28	2	**186-6218**	1	VALVE GP-RELIEF (STEERING, IMPLEMENT PILOT)	1649
	29	1	*188-1035*	1	TEE AS	
		1	**3D-2824**	1	SEAL-O-RING	
		1	**5K-9090**	1	SEAL-O-RING	
		1	**6V-9746**	1	SEAL-O-RING	
		1	**8T-7520**	1	TEE	
	30	2	**197-3295**	2	FLANGE-HALF	
	31	2	**203-3072**	1	TUBE AS	
I	32	1	**223-4263**	1	HOSE AS	
	33	1	**230-9101**	1	PLATE	
I	34	1	**230-9800**	1	HOSE AS	
I	35	1	**230-9802**	1	HOSE AS	
	36	1	**230-9804**	1	BRACKET AS	
I	37	2	**121-3286**	1	HOSE AS	
	38	1	*148-8327*	1	CONNECTOR AS	
		1	**3D-2824**	1	SEAL-O-RING	
		1	**6V-8637**	1	CONNECTOR	
		1	**6V-9746**	1	SEAL-O-RING	
	39	1	*222-6869*	1	CONNECTOR AS	
		1	**3J-1907**	1	SEAL-O-RING	
		1	**6V-8397**	1	SEAL-O-RING	

HYDRAULIC SYSTEM

230-2400 LINES GP-HYDRAULIC (contd.) i02908863

NOTE	REF NO	GRAPHIC REF	PART NUMBER	QTY	PART NAME 1 2 3 4 5 6 (PRODUCT LEVEL)	SEE PAGE
		1	**9X-2614**	1	CONNECTOR	
	40	2	*148-8340*	1	CONNECTOR AS	
		2	**3K-0360**	1	SEAL-O-RING	
		2	**6V-8398**	1	SEAL-O-RING	
		2	**6V-8639**	1	CONNECTOR	
	41	2	*148-8347*	3	ELBOW AS	
					(EACH INCLUDES)	
		2	**3D-2824**	1	SEAL-O-RING	
		2	**6V-9007**	1	ELBOW	
		2	**6V-9746**	1	SEAL-O-RING	
	42	2	*148-8360*	1	ELBOW AS	
		2	**6V-9182**	1	ELBOW	
		2	**6V-9746**	1	SEAL-O-RING	
		2	**7M-8485**	1	SEAL-O-RING	
	43	2	*148-8364*	1	ELBOW AS	
		2	**3K-0360**	1	SEAL-O-RING	
		2	**6V-8398**	1	SEAL-O-RING	
		2	**6V-8625**	1	ELBOW	
	44	1	*148-8374*	1	ELBOW AS	
		1	**3K-0360**	1	SEAL-O-RING	
		1	**6V-8397**	1	SEAL-O-RING	
		1	**6V-8723**	1	ELBOW	
	45	1	*148-8408*	1	PLUG AS	
		1	**3D-2824**	1	SEAL-O-RING	
		1	**9S-4183**	1	PLUG-O-RING	
	46	2	*148-8427*	1	TEE AS	
		2	**6V-8398**	3	SEAL-O-RING	
		2	**8T-6895**	1	TEE-UNION	
	47	2	*150-3065*	1	ADAPTER AS	
		2	**3J-1907**	1	SEAL-O-RING	
		2	**6V-0484**	1	ADAPTER-O-RING	
	48	1	*153-6242*	1	CONNECTOR AS	
		1	**6V-9746**	1	SEAL-O-RING	
		1	**7M-8485**	1	SEAL-O-RING	
		1	**8T-0197**	1	CONNECTOR	
	49	1	*155-6344*	1	ELBOW AS	
		1	**5K-9090**	2	SEAL-O-RING	
		1	**6V-8991**	1	ELBOW	
	50	2	*164-5590*	1	VALVE AS-FLUID SAMPLING	
		2	**3J-7354**	1	SEAL-O-RING	
		2	**8C-3446**	1	VALVE-FLUID SAMPLING	
	51	1	*148-8353*	1	ELBOW AS	
		1	**3J-1907**	1	SEAL-O-RING	
		1	**6V-8397**	1	SEAL-O-RING	
		1	**6V-9001**	1	ELBOW	
	52	1	**1P-3705**	4	SEAL-RECTANGULAR	
	53	1,2	**1P-4582**	6	FLANGE-HALF	
	54	1	**2V-0600**	2	CLAMP-HALF	
	55	2	**4J-0522**	1	SEAL-O-RING	
	56	1,2	**4J-0527**	3	SEAL-O-RING	
	57	1	**4J-5267**	2	SEAL-O-RING	
	58	2	**5H-4020**	1	COVER	
	59	1	**5P-8077**	8	FLANGE-HALF	
	60	1	**6D-4246**	1	CLIP	
	61	2	**6V-9169**	1	NUT-BULKHEAD (13/16-16-THD)	
	62	1	**6V-9172**	1	NUT (1-7/16-12-THD)	
M	63	2	**7X-2552**	4	BOLT (M16X2X30-MM)	
	64	2	**7X-3392**	4	WASHER-HARD (13.5X22.5X3-MM THK)	
	65	1	**8C-3205**	4	FLANGE-HALF	

230-2400 LINES GP-HYDRAULIC (contd.) i02908863

NOTE	REF NO	GRAPHIC REF	PART NUMBER	QTY	PART NAME 1 2 3 4 5 6 (PRODUCT LEVEL)	SEE PAGE
	66	2	**8T-1885**	1	CLIP (SLOT)	
	67	2	**8T-1886**	1	CLIP (TAB)	
	68	1,2	**8T-4121**	17	WASHER-HARD (11X21X2.5-MM THK)	
	69	1	**8T-4122**	16	WASHER-HARD (17X32X3.5-MM THK)	
M	70	1,2	**8T-4137**	6	BOLT (M10X1.5X20-MM)	
M	71	1	**8T-4139**	2	BOLT (M12X1.75X30-MM)	
M	72	1	**8T-4140**	16	BOLT (M16X2X60-MM)	
M	74	1,2	**8T-4183**	8	BOLT (M12X1.75X40-MM)	
M	75	2	**8T-4184**	4	BOLT (M12X1.75X45-MM)	
M	76	1,2	**8T-4193**	12	BOLT (M16X2X50-MM)	
M	77	1	**8T-4195**	1	BOLT (M10X1.5X30-MM)	
M	78	1	**8T-4196**	8	BOLT (M10X1.5X35-MM)	
	79	1,2	**8T-4223**	25	WASHER-HARD (13.5X25.5X3-MM THK)	
M	80	1,2	**8T-4956**	15	BOLT (M12X1.75X35-MM)	
M	81	2	**8T-6466**	2	BOLT (M10X1.5X60-MM)	
	82	1,2	**9F-7283**	3	SEAL-O-RING	
	83	1,2	**9X-8257**	17	WASHER (17.5X30X3.5-MM THK)	

I-REFER TO HYDRAULIC INFORMATION SYSTEM
M-METRIC PART
Y-SEPARATE ILLUSTRATION

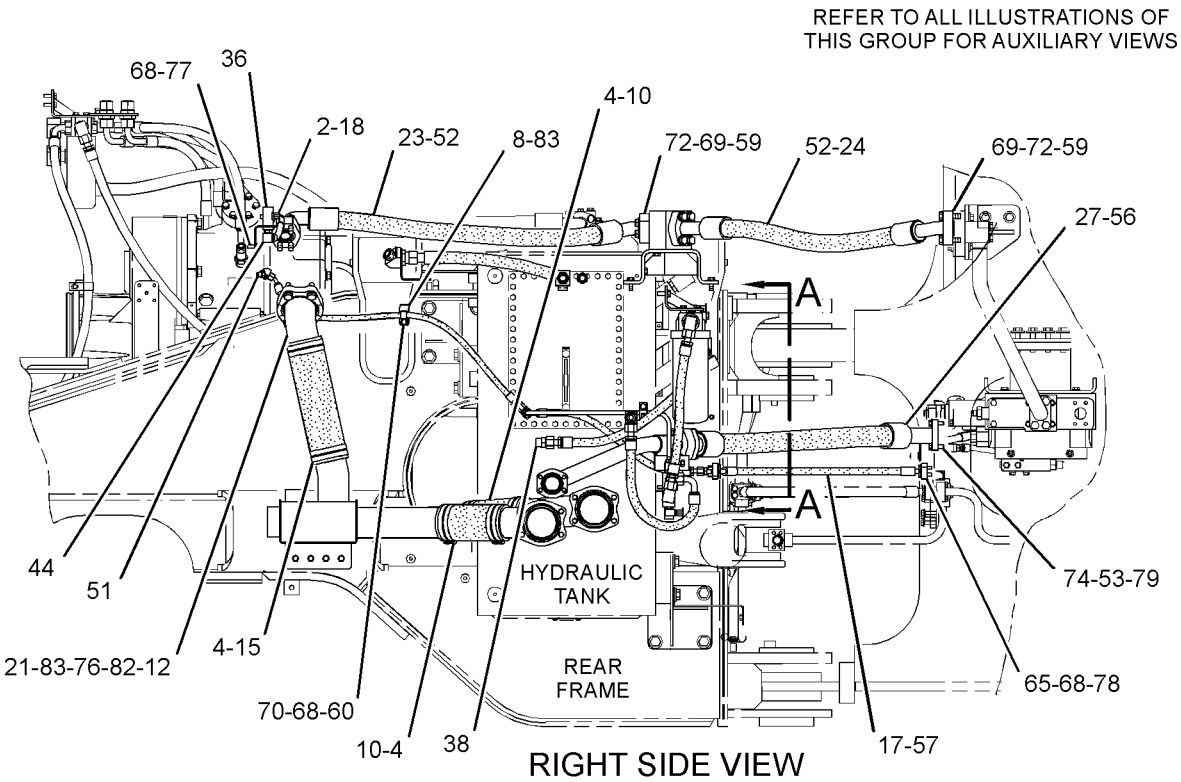

RIGHT SIDE VIEW

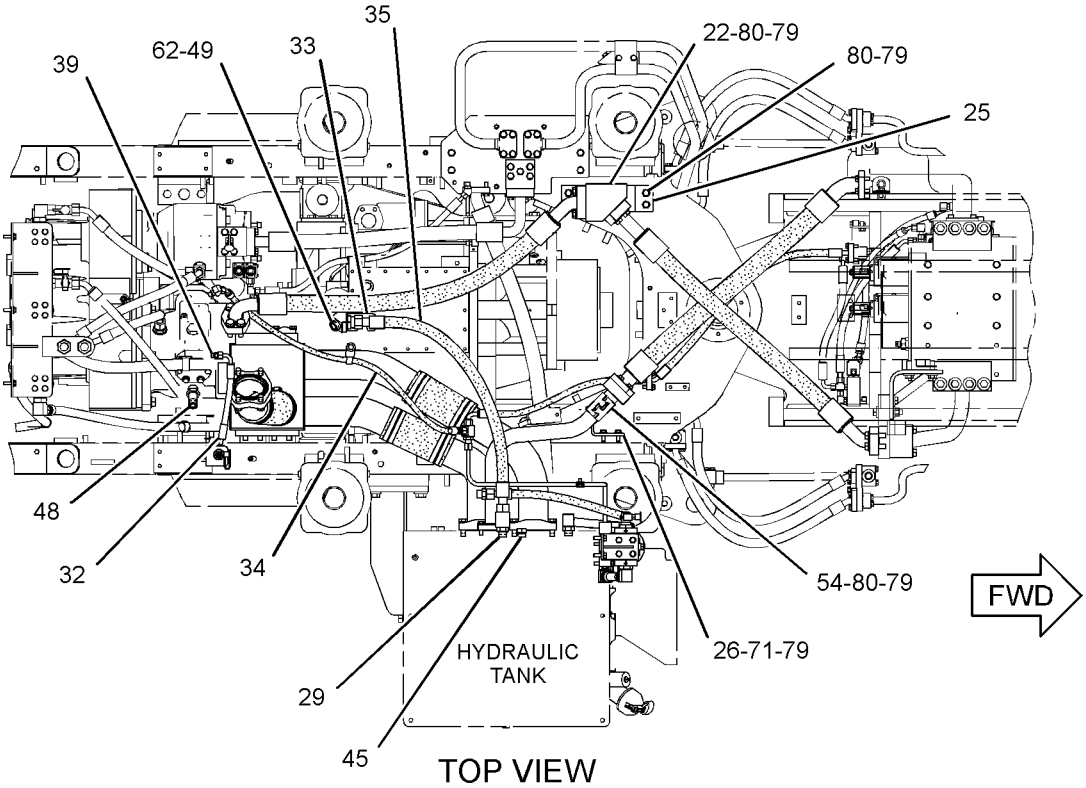

TOP VIEW

GRAPHIC #1 g01481938

230-2400 **LINES GP-HYDRAULIC** *(contd.)* **i02908863**

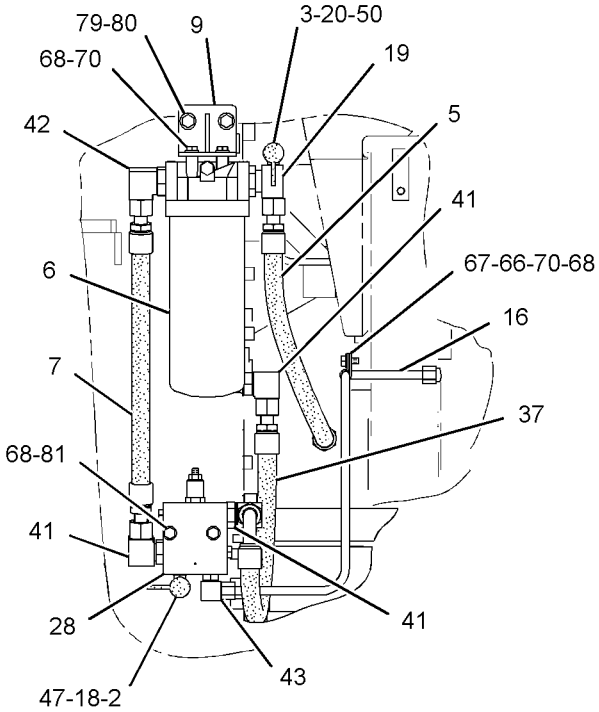

SECTION A-A

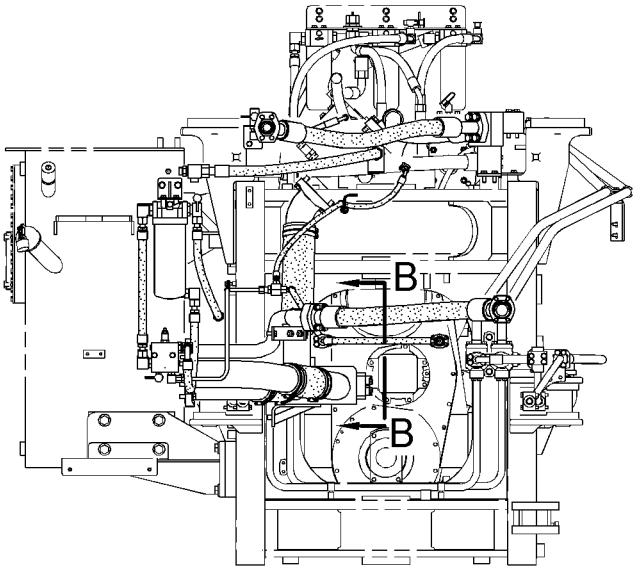

FRONT VIEW

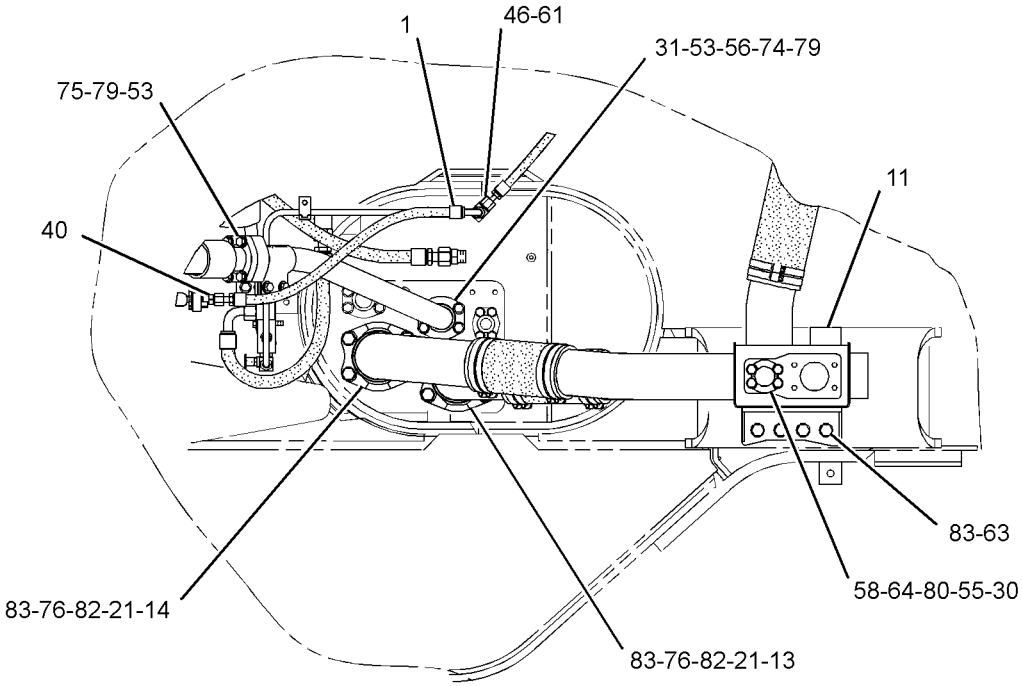

SECTION B-B

GRAPHIC #2 **<END>** g01481939

HYDRAULIC SYSTEM

345-3932 LINES GP-HYDRAULIC

S/N: BXY4000-UP

PART OF 345-3930 HYDRAULIC AR

SMCS-5057 **i03750953**

NOTE	REF NO	GRAPHIC REF	PART NUMBER	QTY	PART NAME 1 2 3 4 5 6 (PRODUCT LEVEL)	SEE PAGE
	1	1	**6V-0852**	2	CAP-DUST	
	2	2	**8C-3451**	1	CAP-DUST	
	3	1,2	**8T-4986**	12	CLAMP-HOSE	
	4	2	**9T-1013**	1	VALVE AS-CHECK	
		2	**3K-0360**	1	SEAL-O-RING	
		2	**6V-8398**	1	SEAL-O-RING	
I	5	2	**126-0197**	1	HOSE AS	
	6	1	**127-4667**	1	STRIP AS	
	7	2	**141-7405**	2	HOSE	
	8	1	**152-3870**	1	TANK AS	
	9	1	**152-5713**	1	TUBE AS	
	10	2	**152-5714**	1	TUBE AS	
	11	1	**152-5715**	1	TUBE AS	
	12	1	**152-5716**	1	HOSE	
	13	2	**155-9461**	1	TUBE AS	
	14	1	*164-5567*	2	COUPLER AS-QUICK DISCONNECT	
					(EACH INCLUDES)	
		1	**6V-3965**	1	FITTING (QUICK DISCONNECT)	
		1	**214-7568**	1	SEAL-O-RING	
	15	2	*164-5611*	1	TEE AS	
		2	**6V-9746**	1	SEAL-O-RING	
		2	**7M-8485**	1	SEAL-O-RING	
		2	**8T-3312**	1	TEE	
	16	2	*169-5862*	1	ELBOW AS	
		2	**3J-1907**	1	SEAL-O-RING	
		2	**8C-6712**	1	ELBOW	
	17	1	**177-4155**	3	FLANGE	
	18	1	**179-6791**	1	MANIFOLD	
I	19	1	**179-6792**	1	HOSE AS	
	20	1	**179-6794**	1	PLATE AS	
	21	2	**183-3626**	1	BRACKET AS	
I	22	1	**183-4491**	1	HOSE AS	
	23	2	*184-2420*	1	ADAPTER AS	
		2	**3E-7401**	1	ADAPTER	
		2	**6V-8397**	1	SEAL-O-RING	
	24	2	*188-1035*	1	TEE AS	
		2	**3D-2824**	1	SEAL-O-RING	
		2	**5K-9090**	1	SEAL-O-RING	
		2	**6V-9746**	1	SEAL-O-RING	
		2	**8T-7520**	1	TEE	
	25	2	**197-3295**	2	FLANGE-HALF	
	26	2	**203-3072**	1	TUBE AS	
I	27	1	**223-4263**	1	HOSE AS	
I	29	1	**230-9800**	1	HOSE AS	
I	30	1	**230-9802**	1	HOSE AS	
	31	1	**230-9804**	1	BRACKET AS	
Y	32	1	**276-3649**	1	VALVE GP-RELIEF (STEERING, IMPLEMENT PILOT)	1650
Y	33	2	**287-8402**	1	FILTER GP-OIL (STEERING, IMPLEMENT PILOT)	1441
	34	2	**345-3928**	1	HOSE AS	
	35	2	**345-3929**	1	HOSE AS	
	36	1	**345-3951**	1	TUBE AS	
I	37	1	**345-3956**	1	HOSE AS	
I	38	1	**345-3958**	1	HOSE AS	
	39	1	**345-3959**	1	BRACKET AS	
M		1	**8T-3597**	2	NUT-WELD (M12X1.75-THD)	
	40	2	**345-3969**	1	BRACKET	

HYDRAULIC SYSTEM

345-3932 **LINES GP-HYDRAULIC** *(contd.)* **i03750953**

NOTE	REF NO	GRAPHIC REF	PART NUMBER	QTY	PART NAME 1 2 3 4 5 6 (PRODUCT LEVEL)	SEE PAGE
I	41	1	**345-3981**	1	HOSE AS	
I	42	2	**121-3286**	1	HOSE AS	
	43	2	**130-5300**	1	CLIP	
	44	2	*148-8327*	1	CONNECTOR AS	
		2	**3D-2824**	1	SEAL-O-RING	
		2	**6V-8637**	1	CONNECTOR	
		2	**6V-9746**	1	SEAL-O-RING	
	45	2	*148-8347*	2	ELBOW AS	
					(EACH INCLUDES)	
		2	**3D-2824**	1	SEAL-O-RING	
		2	**6V-9007**	1	ELBOW	
		2	**6V-9746**	1	SEAL-O-RING	
	46	1	*148-8353*	1	ELBOW AS	
		1	**3J-1907**	1	SEAL-O-RING	
		1	**6V-8397**	1	SEAL-O-RING	
		1	**6V-9001**	1	ELBOW	
	47	2	*148-8360*	1	ELBOW AS	
		2	**6V-9182**	1	ELBOW	
		2	**6V-9746**	1	SEAL-O-RING	
		2	**7M-8485**	1	SEAL-O-RING	
	48	2	*148-8364*	1	ELBOW AS	
		2	**3K-0360**	1	SEAL-O-RING	
		2	**6V-8398**	1	SEAL-O-RING	
		2	**6V-8625**	1	ELBOW	
	49	1	*148-8374*	1	ELBOW AS	
		1	**3K-0360**	1	SEAL-O-RING	
		1	**6V-8397**	1	SEAL-O-RING	
		1	**6V-8723**	1	ELBOW	
	50	2	*148-8408*	1	PLUG AS	
		2	**3D-2824**	1	SEAL-O-RING	
		2	**9S-4183**	1	PLUG-O-RING	
	51	2	*148-8427*	1	TEE AS	
		2	**6V-8398**	3	SEAL-O-RING	
		2	**8T-6895**	1	TEE-UNION	
	52	1	*150-3065*	1	ADAPTER AS	
		1	**3J-1907**	1	SEAL-O-RING	
		1	**6V-0484**	1	ADAPTER-O-RING	
	53	1	*153-6242*	1	CONNECTOR AS	
		1	**6V-9746**	1	SEAL-O-RING	
		1	**7M-8485**	1	SEAL-O-RING	
		1	**8T-0197**	1	CONNECTOR	
	54	1	*155-6344*	1	ELBOW AS	
		1	**5K-9090**	2	SEAL-O-RING	
		1	**6V-8991**	1	ELBOW	
	55	2	*164-5574*	1	TEE AS	
		2	**3D-2824**	1	SEAL-O-RING	
		2	**6V-8784**	1	TEE-FACE SEAL	
		2	**6V-9746**	2	SEAL-O-RING	
	56	2	*164-5590*	1	VALVE AS-FLUID SAMPLING	
		2	**3J-7354**	1	SEAL-O-RING	
		2	**8C-3446**	1	VALVE-FLUID SAMPLING	
	57	1	**1P-3705**	4	SEAL-RECTANGULAR	
	58	1,2	**1P-4582**	6	FLANGE-HALF	
	59	1	*222-6869*	1	CONNECTOR AS	
		1	**3J-1907**	1	SEAL-O-RING	
		1	**6V-8397**	1	SEAL-O-RING	
		1	**9X-2614**	1	CONNECTOR	
	60	1	**2P-1293**	1	LOCKNUT (1-3/16-12-THD)	
	61	2	**2V-0600**	2	CLAMP-HALF	

HYDRAULIC SYSTEM

345-3932 **LINES GP-HYDRAULIC** *(contd.)* **i03750953**

NOTE	REF NO	GRAPHIC REF	PART NUMBER	QTY	PART NAME 1 2 3 4 5 6 (PRODUCT LEVEL)	SEE PAGE
	62	1	**4J-0520**	1	SEAL-O-RING	
	63	2	**4J-0522**	1	SEAL-O-RING	
	64	1,2	**4J-0527**	3	SEAL-O-RING	
	65	1	**4J-5267**	1	SEAL-O-RING	
	66	2	**5H-4020**	1	COVER	
	67	1,2	**5P-1076**	4	WASHER-HARD (13.5X30X4-MM THK)	
	68	1	**5P-8077**	6	FLANGE-HALF	
	69	1	**6D-4246**	1	CLIP	
	70	2	**6V-1889**	1	CLIP	
	71	2	**6V-9168**	1	NUT (11/16-16-THD)	
	72	2	**6V-9169**	1	NUT-BULKHEAD (13/16-16-THD)	
	73	1	**6V-9172**	1	NUT (1-7/16-12-THD)	
	74	1	**6V-9746**	1	SEAL-O-RING	
	75	1	**7X-0531**	1	WASHER-HARD (31X52.5X6-MM THK)	
M	76	1	**7X-2552**	4	BOLT (M16X2X30-MM)	
	77	2	**7X-3392**	4	WASHER-HARD (13.5X22.5X3-MM THK)	
	78	2	**7X-7729**	4	WASHER (11X25X3-MM THK)	
	79	1	**8C-3205**	2	FLANGE-HALF	
	80	1	**8C-3206**	2	FLANGE-HALF	
	81	2	**8T-1885**	1	CLIP (SLOT)	
	82	2	**8T-1886**	1	CLIP (TAB)	
	83	2	**8T-1887**	1	CLIP (SLOT)	
	84	2	**8T-1888**	1	CLIP (TAB)	
	85	1,2	**8T-4121**	15	WASHER-HARD (11X21X2.5-MM THK)	
	86	1	**8T-4122**	12	WASHER-HARD (17X32X3.5-MM THK)	
M	87	2	**8T-4133**	1	NUT (M10X1.5-THD)	
M	88	1,2	**8T-4137**	6	BOLT (M10X1.5X20-MM)	
M	89	2	**8T-4139**	2	BOLT (M12X1.75X30-MM)	
M	90	1	**8T-4140**	12	BOLT (M16X2X60-MM)	
M	91	1	**8T-4183**	8	BOLT (M12X1.75X40-MM)	
M	92	1,2	**8T-4184**	6	BOLT (M12X1.75X45-MM)	
M	93	1	**8T-4193**	12	BOLT (M16X2X50-MM)	
M	94	1,2	**8T-4195**	2	BOLT (M10X1.5X30-MM)	
M	95	1	**8T-4196**	8	BOLT (M10X1.5X35-MM)	
	96	1,2	**8T-4223**	23	WASHER-HARD (13.5X25.5X3-MM THK)	
M	97	1,2	**8T-4956**	15	BOLT (M12X1.75X35-MM)	
	98	2	**8T-4994**	1	WASHER-HARD (20X36.5X3.5-MM THK)	
M	99	1	**8T-6466**	2	BOLT (M10X1.5X60-MM)	
	100	1	**9F-7283**	3	SEAL-O-RING	
	101	1	**9X-8257**	17	WASHER (17.5X30X3.5-MM THK)	

I-REFER TO HYDRAULIC INFORMATION SYSTEM
M-METRIC PART
Y-SEPARATE ILLUSTRATION

345-3932 LINES GP-HYDRAULIC *(contd.)* i03750953

REFER TO ALL ILLUSTRATIONS OF
THIS GROUP FOR AUXILIARY VIEWS

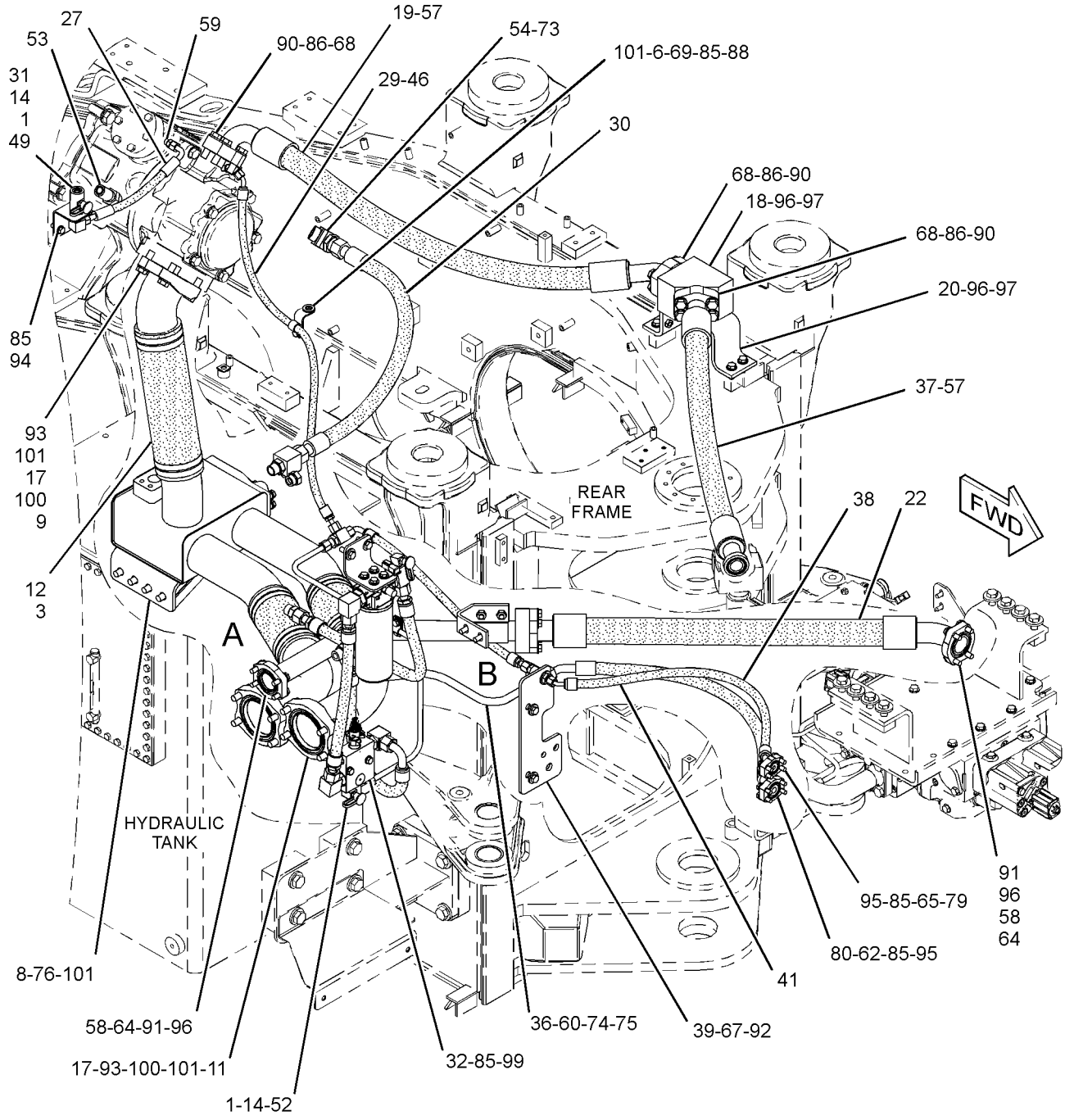

GRAPHIC #1 g02046114

345-3932 **LINES GP-HYDRAULIC** *(contd.)* **i03750953**

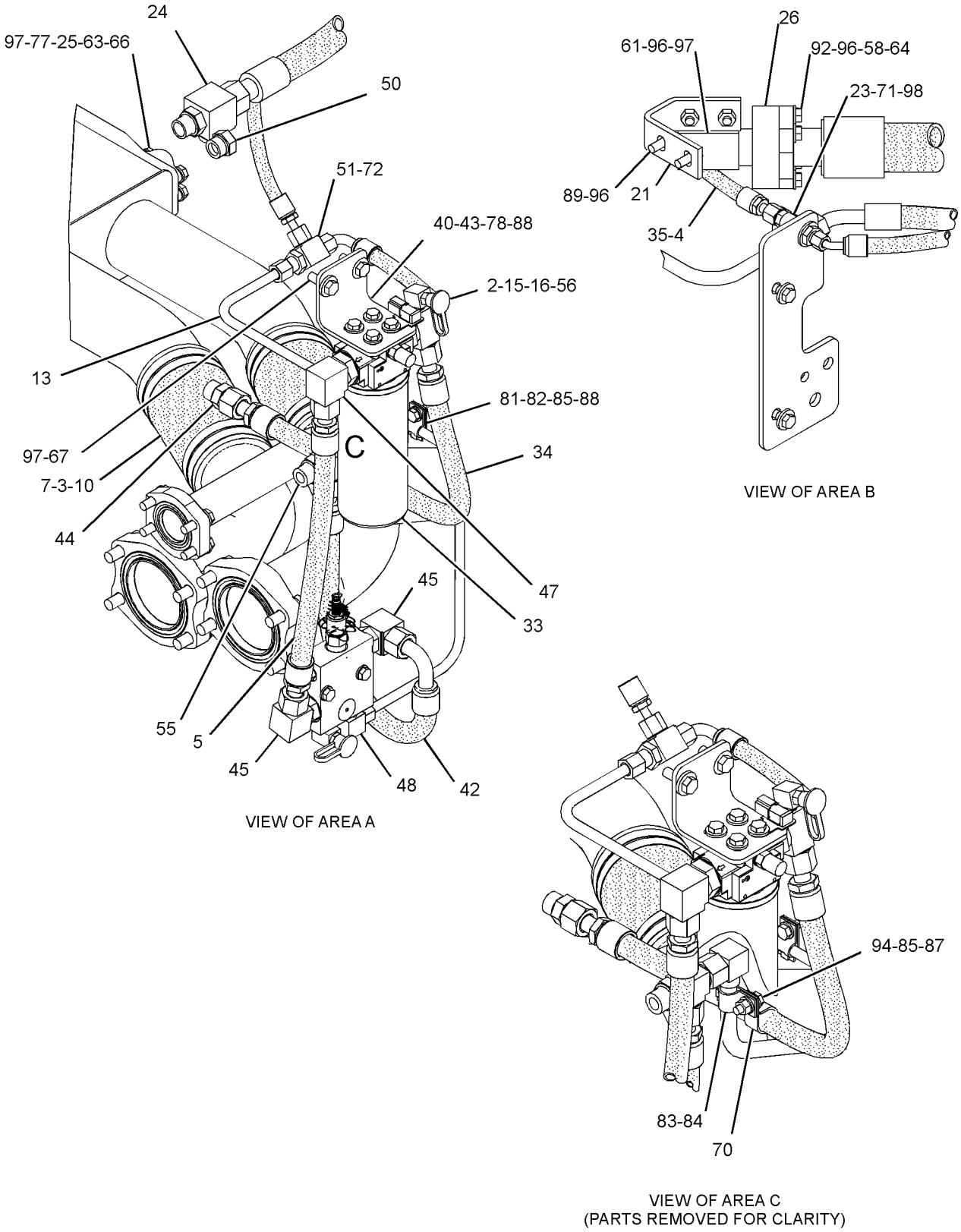

GRAPHIC #2 **<END>** g02046115

HYDRAULIC SYSTEM

225-6716 LINES GP-HYDRAULIC FAN

S/N: BXY1-808

PART OF 225-5449 HYDRAULIC AR

SMCS-1386, 1387, 5057 **i02468392**

NOTE	REF NO	GRAPHIC REF	PART NUMBER	QTY	PART NAME 1 2 3 4 5 6 (PRODUCT LEVEL)	SEE PAGE
	1	3	**1F-1609**	2	SPACER (13.5X25.4X39.7-MM THK)	
I	2	1	**3T-6848**	1	HOSE AS	
	3	2	**6E-1454**	1	VALVE GP-CHECK (HYDRAULIC OIL COOLER BYPASS)	
	4	1	**8R-0752**	1	ADAPTER	
	5	3	**9T-3752**	1	VALVE AS-CHECK (FAN MOTOR ANTI-CAVITATION)	
	6	1	**9J-3866**	1	ADAPTER	
	7	3	**145-3319**	2	BRACKET AS	
					(EACH INCLUDES)	
M		3	**8T-3597**	1	NUT-WELD (M12X1.75-THD)	
	8	1	**154-8962**	1	BRACKET	
I	9	3	**155-7518**	1	HOSE AS	
I	10	2	**155-7525**	1	HOSE AS	
I	11	2	**155-7527**	1	HOSE AS	
	12	2	**156-7472**	1	MANIFOLD	
I	13	3	**162-7365**	1	HOSE AS	
	14	3	*167-1795*	1	ELBOW AS	
		3	**3D-2824**	1	SEAL-O-RING	
		3	**8T-3491**	1	ELBOW	
	15	3	*172-5277*	1	TEE AS	
		3	**3D-2824**	1	SEAL-O-RING	
		3	**6V-9746**	1	SEAL-O-RING	
		3	**8T-8901**	1	TEE-O-RING PORT	
Y	16	1	**191-8735**	1	VALVE GP-DEMAND FAN	1616
I	18	3	**239-9233**	1	HOSE AS	
	19	2	**225-6717**	1	PLATE AS	
M		2	**9R-2613**	2	BOSS-WELD (M10X1.5X25-MM)	
I	20	3	**225-6719**	1	HOSE AS	
I	21	3	**225-6720**	1	HOSE AS	
I	22	1	**225-6723**	1	HOSE AS	
I	23	1	**225-6724**	1	HOSE AS	
	24	2	*148-8312*	1	ADAPTER AS	
		2	**3D-2824**	1	SEAL-O-RING	
		2	**3T-4965**	1	ADAPTER-O-RING	
	25	2	*148-8327*	2	CONNECTOR AS	
					(EACH INCLUDES)	
		2	**3D-2824**		SEAL-O-RING	
		2	**6V-8637**		CONNECTOR	
		2	**6V-9746**		SEAL-O-RING	
	26	2	*148-8347*	1	ELBOW AS	
		2	**3D-2824**	1	SEAL-O-RING	
		2	**6V-9007**	1	ELBOW	
		2	**6V-9746**	1	SEAL-O-RING	
	27	1	*148-8353*	2	ELBOW AS	
					(EACH INCLUDES)	
		1	**3J-1907**	1	SEAL-O-RING	
		1	**6V-8397**	1	SEAL-O-RING	
		1	**6V-9001**	1	ELBOW	
	28	1	*148-8359*	1	ELBOW AS	
		1	**3K-0360**	1	SEAL-O-RING	
		1	**6V-9746**	1	SEAL-O-RING	
		1	**6V-9877**	1	ELBOW	
	29	1	*150-4027*	1	TEE AS	
		1	**3E-2310**	1	TEE	
		1	**3J-1907**	1	SEAL-O-RING	
		1	**6V-8397**	1	SEAL-O-RING	
	30	3	*148-8372*	1	ELBOW AS	

HYDRAULIC SYSTEM

225-6716 LINES GP-HYDRAULIC FAN *(contd.)* i02468392

NOTE	REF NO	GRAPHIC REF	PART NUMBER	QTY	PART NAME 1 2 3 4 5 6 (PRODUCT LEVEL)	SEE PAGE
		3	**2M-9780**	1	SEAL-O-RING	
		3	**6V-8398**	1	SEAL-O-RING	
		3	**6V-8721**	1	ELBOW	
	31	3	*148-8376*	1	ELBOW AS	
		3	**6V-8983**	1	ELBOW	
		3	**6V-9746**	2	SEAL-O-RING	
	32	1	*148-8418*	1	REDUCER AS	
		1	**6V-8398**	1	SEAL-O-RING	
		1	**6V-8942**	1	REDUCER-O-RING	
	33	2	*148-8449*	1	TEE AS-SWIVEL	
		2	**6V-9746**	2	SEAL-O-RING	
		2	**6V-9839**	1	TEE-SWIVEL	
	34	1	*150-4037*	1	TEE AS	
		1	**6V-8398**	2	SEAL-O-RING	
		1	**6V-9844**	1	TEE-SWIVEL	
	35	1	*150-4043*	1	CONNECTOR AS	
		1	**3J-1907**	1	SEAL-O-RING	
		1	**6V-8398**	1	SEAL-O-RING	
		1	**6V-9873**	1	CONNECTOR	
	36	2	*153-6236*	1	REDUCER AS	
		2	**6V-8946**	1	REDUCER	
		2	**6V-9746**	1	SEAL-O-RING	
	37	2	*153-6237*	1	ELBOW AS	
		2	**3D-2824**	1	SEAL-O-RING	
		2	**6V-9004**	1	ELBOW	
		2	**6V-9746**	1	SEAL-O-RING	
	38	1	*155-3624*	1	PLUG AS	
		1	**3J-7354**	1	SEAL-O-RING	
		1	**9S-4182**	1	PLUG-O-RING	
I	39	2	**155-7517**	1	HOSE AS	
I	40	2	**155-7528**	1	HOSE AS	
	41	3	*164-5574*	1	TEE AS	
		3	**3D-2824**	1	SEAL-O-RING	
		3	**6V-8784**	1	TEE-FACE SEAL	
		3	**6V-9746**	2	SEAL-O-RING	
	42	1	*164-6862*	1	TEE AS	
		1	**6V-9160**	1	TEE-FACE SEAL	
		1	**6V-9746**	3	SEAL-O-RING	
	43	1	*164-7908*	1	ELBOW AS	
		1	**3J-7354**	1	SEAL-O-RING	
		1	**6V-8397**	1	SEAL-O-RING	
		1	**8T-7546**	1	ELBOW	
	44	1	**1P-4579**	2	FLANGE-HALF	
	45	3	**1P-4582**	2	FLANGE-HALF	
	46	2,3	**1S-6420**	4	CLIP	
	47	1,3	**2P-1293**	2	LOCKNUT (1-3/16-12-THD)	
	48	3	**3D-2824**	1	SEAL-O-RING	
	49	3	**3P-2404**	2	CLIP	
	50	1,3	**4J-0520**	3	SEAL-O-RING	
	51	1	**4J-0524**	2	SEAL-O-RING	
	52	3	**4J-0527**	1	SEAL-O-RING	
	53	2	**5K-9090**	1	SEAL-O-RING	
	54	3	**5P-7470**	1	CLIP (SLOT)	
	55	3	**5P-7471**	1	CLIP (TAB)	
	56	3	**5P-7703**	1	GROMMET	
	57	2	**5P-7854**	2	CLIP	
	58	1,2,3	**6V-1889**	7	CLIP	
	59	3	**6V-9746**	1	SEAL-O-RING	
	60	2	**7M-8485**	1	SEAL-O-RING	

225-6716 LINES GP-HYDRAULIC FAN *(contd.)* i02468392

NOTE	REF NO	GRAPHIC REF	PART NUMBER	QTY	PART NAME 1 2 3 4 5 6 (PRODUCT LEVEL)	SEE PAGE
	61	1,3	**8C-3206**	4	FLANGE-HALF	
	62	2,3	**8D-9947**	3	CLIP	
	63	1,2,3	**8T-4121**	29	WASHER-HARD (11X21X2.5-MM THK)	
M	64	1,2,3	**8T-4136**	12	BOLT (M10X1.5X25-MM)	
M	65	1,2,3	**8T-4137**	5	BOLT (M10X1.5X20-MM)	
M	66	3	**8T-4139**	3	BOLT (M12X1.75X30-MM)	
M	67	2	**8T-4178**	2	BOLT (M10X1.5X90-MM)	
M	68	1	**8T-4182**	2	BOLT (M10X1.5X45-MM)	
M	69	3	**8T-4184**	4	BOLT (M12X1.75X45-MM)	
M	70	3	**8T-4196**	4	BOLT (M10X1.5X35-MM)	
	71	1,3	**8T-4223**	13	WASHER-HARD (13.5X25.5X3-MM THK)	
M	72	1,3	**8T-4648**	6	BOLT (M12X1.75X70-MM)	
M	73	1	**8T-5005**	4	BOLT (M10X1.5X70-MM)	
	74	1	**9X-6580**	1	NUT (1-3/16-12-THD)	
I	75	1	**226-1958**	1	HOSE AS	
	76	1	*164-5567*	1	COUPLER AS-QUICK DISCONNECT	
		1	**3J-1907**	1	SEAL-O-RING	
		1	**6V-3965**	1	FITTING (QUICK DISCONNECT)	
	77	1	**8C-3451**	1	CAP-DUST	
	78	2	**124-3019**	2	BRACKET AS	
					(EACH INCLUDES)	
M		2	**8T-3490**	1	NUT-WELD (M10X1.5-THD)	

I-REFER TO HYDRAULIC INFORMATION SYSTEM
M-METRIC PART
Y-SEPARATE ILLUSTRATION

225-6716 LINES GP-HYDRAULIC FAN *(contd.)* i02468392

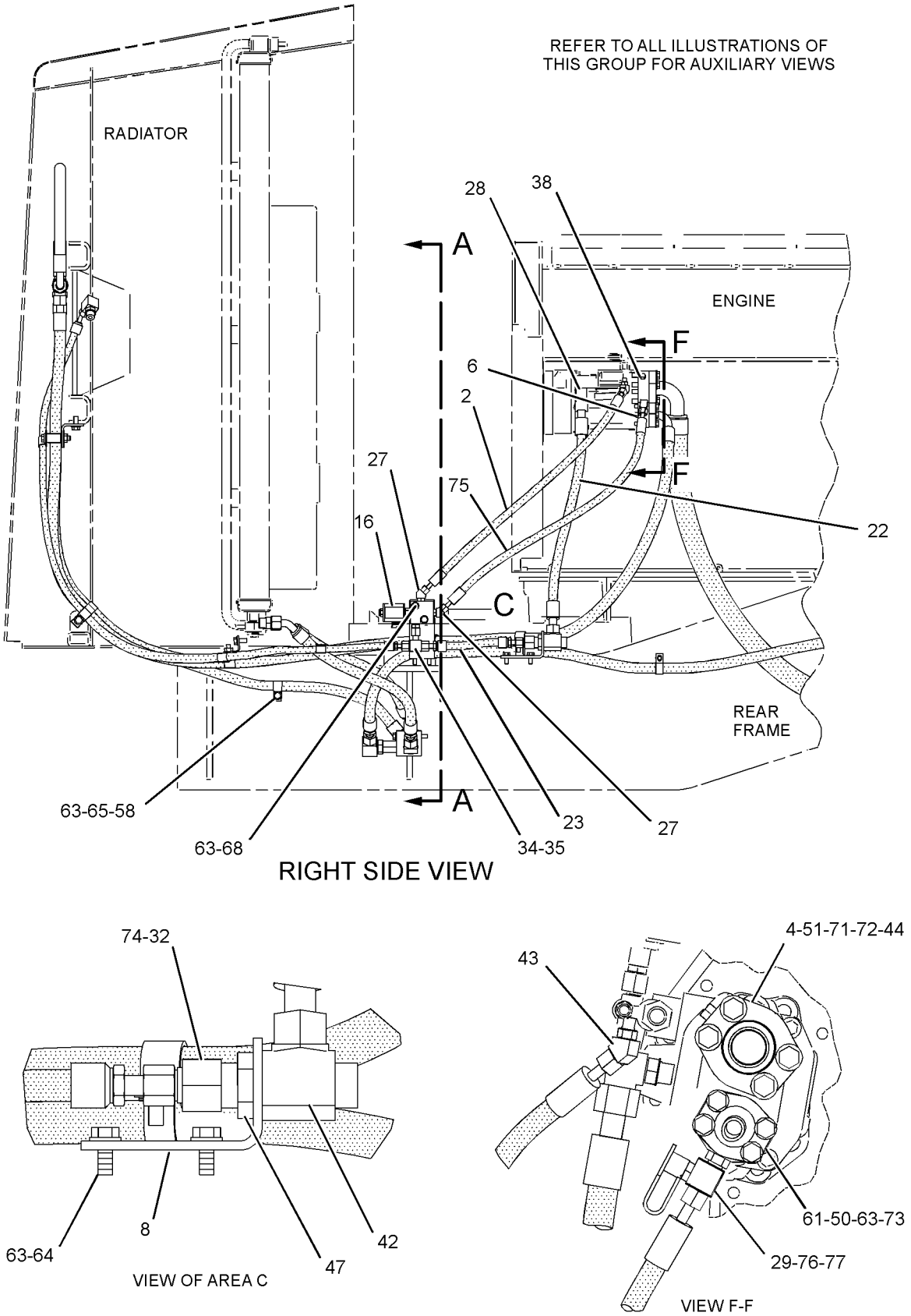

GRAPHIC #1 g01178023

225-6716 **LINES GP-HYDRAULIC FAN** *(contd.)* **i02468392**

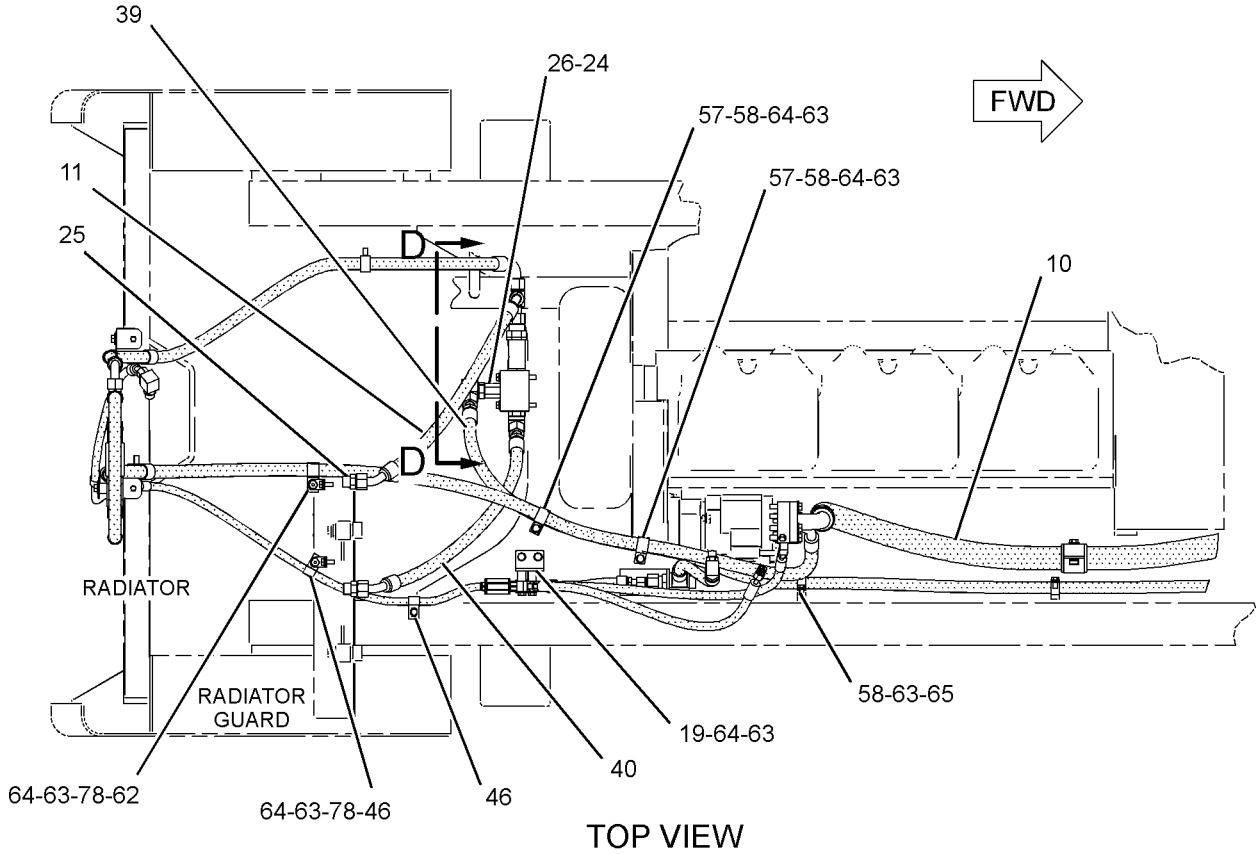

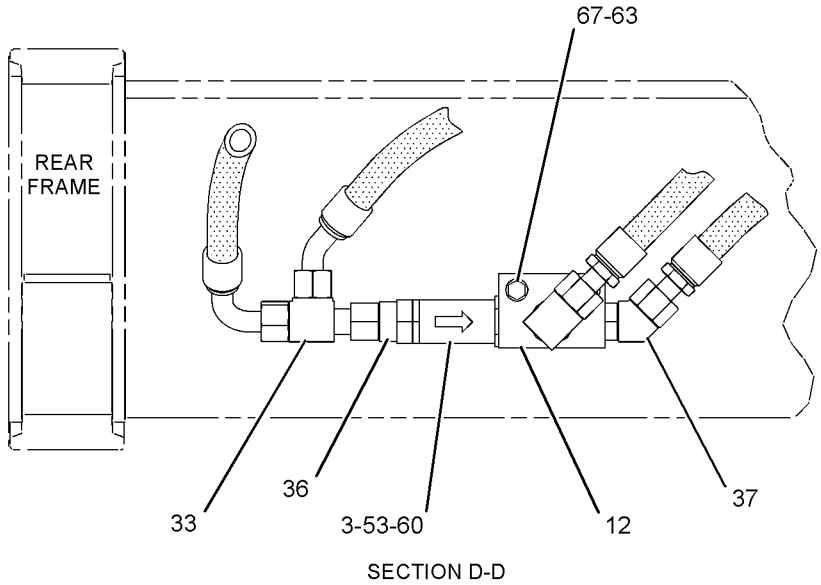

GRAPHIC #2 g01178064

225-6716 **LINES GP-HYDRAULIC FAN** *(contd.)* **i02468392**

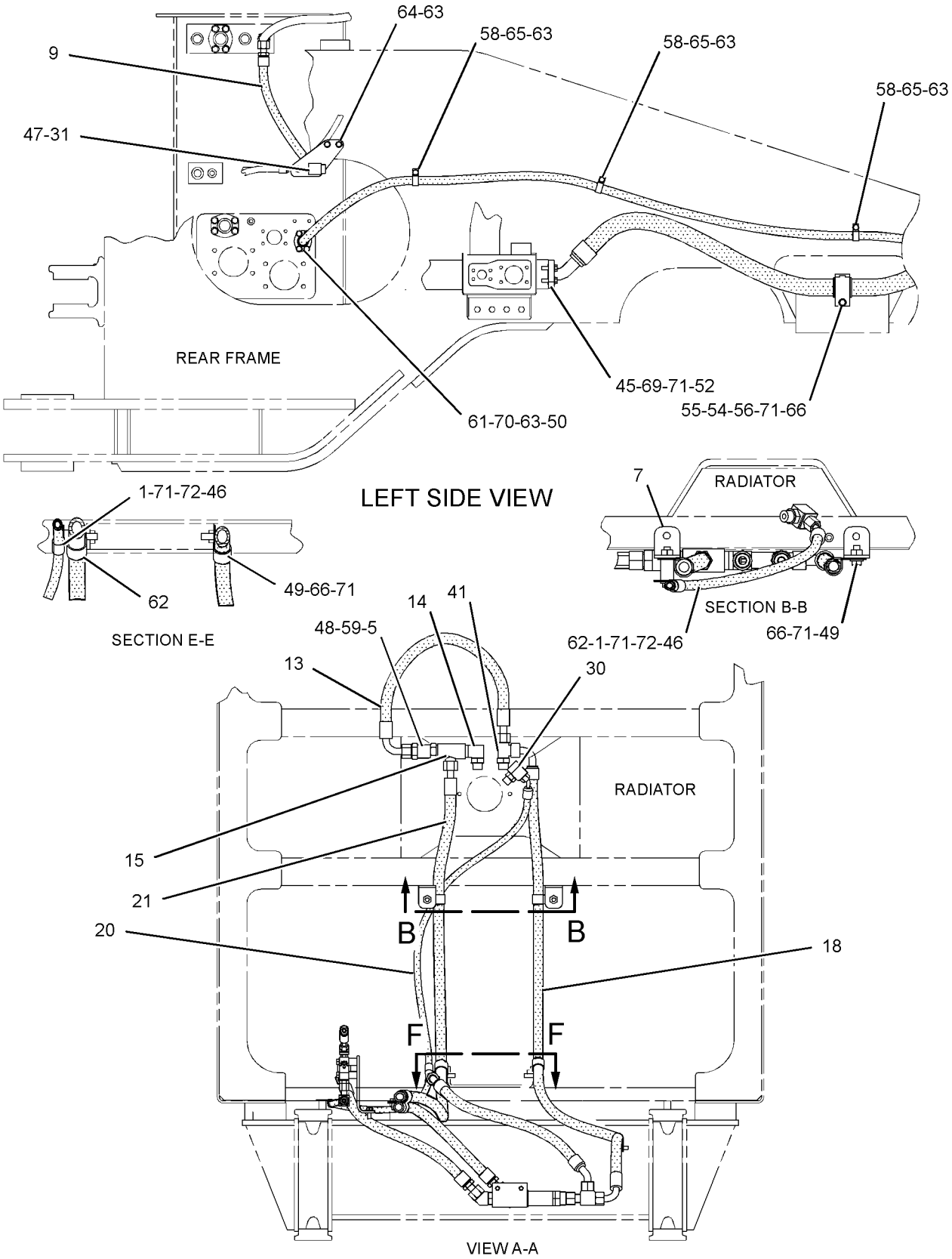

GRAPHIC #3 **<END>** g01238587

HYDRAULIC SYSTEM

225-6716 LINES GP-HYDRAULIC FAN

S/N: BXY809-2398

PART OF 225-5449, 298-2038 HYDRAULIC AR

SMCS-1386, 1387, 5057 **i02928821**

NOTE	REF NO	GRAPHIC REF	PART NUMBER	QTY	PART NAME 1 2 3 4 5 6 (PRODUCT LEVEL)	SEE PAGE
C	1	2,3,4	**1F-1609**	3	SPACER (13.5X25.4X39.7-MM THK)	
	2	4	**6E-1454**	1	VALVE GP-CHECK (HYDRAULIC OIL COOLER BYPASS)	
	3	4	**8C-3451**	1	CAP-DUST	
	4	4	**8R-0752**	1	ADAPTER	
	5	2	**9J-3866**	1	ADAPTER	
	6	3	**9T-3752**	1	VALVE AS-CHECK (FAN MOTOR ANTI-CAVITATION)	
	7	1	**124-3019**	2	BRACKET AS	
					(EACH INCLUDES)	
M		1	**8T-3490**	1	NUT-WELD (M10X1.5-THD)	
	8	3	**145-3319**	2	BRACKET AS	
					(EACH INCLUDES)	
M		3	**8T-3597**	1	NUT-WELD (M12X1.75-THD)	
CI	9	2	**152-7737**	1	HOSE AS	
	10	4	**154-8962**	1	BRACKET	
I	11	2	**155-7518**	1	HOSE AS	
I	12	1	**290-3265**	1	HOSE AS	
I	13	1	**155-7527**	1	HOSE AS	
	14	4	**156-7472**	1	MANIFOLD	
CI	15	2	**161-6403**	1	HOSE AS	
I	16	3	**162-7365**	1	HOSE AS	
	17	3	*167-1795*	1	ELBOW AS	
		3	**3D-2824**	1	SEAL-O-RING	
		3	**8T-3491**	1	ELBOW	
	18	3	*172-5277*	1	TEE AS	
		3	**3D-2824**	1	SEAL-O-RING	
		3	**6V-9746**	1	SEAL-O-RING	
		3	**8T-8901**	1	TEE-O-RING PORT	
Y	19	2	**191-8735**	1	VALVE GP-DEMAND FAN	1616
	20	2	**198-1854**	1	PLATE	
	21	1	**225-6717**	1	PLATE AS	
M		1	**9R-2613**	2	BOSS-WELD (M10X1.5X25-MM)	
I	22	3	**225-6719**	1	HOSE AS	
I	23	3	**225-6720**	1	HOSE AS	
I	24	2	**225-6723**	1	HOSE AS	
I	25	2	**225-6724**	1	HOSE AS	
I	26	3	**239-9233**	1	HOSE AS	
	27	1	*148-8312*	1	ADAPTER AS	
		1	**3D-2824**	1	SEAL-O-RING	
		1	**3T-4965**	1	ADAPTER-O-RING	
C	28	2	*148-8326*	1	CONNECTOR AS	
		2	**3J-7354**	1	SEAL-O-RING	
		2	**6V-8397**	1	SEAL-O-RING	
		2	**6V-9872**	1	CONNECTOR	
	29	1	*148-8327*	2	CONNECTOR AS	
					(EACH INCLUDES)	
		1	**3D-2824**	1	SEAL-O-RING	
		1	**6V-8637**	1	CONNECTOR	
		1	**6V-9746**	1	SEAL-O-RING	
C	30	2	*148-8336*	1	CONNECTOR AS	
		2	**3J-1907**	1	SEAL-O-RING	
		2	**6V-8397**	1	SEAL-O-RING	
		2	**6V-8636**	1	CONNECTOR	
	31	1	*148-8347*	1	ELBOW AS	
		1	**3D-2824**	1	SEAL-O-RING	
		1	**6V-9007**	1	ELBOW	
		1	**6V-9746**	1	SEAL-O-RING	

HYDRAULIC SYSTEM

225-6716 LINES GP-HYDRAULIC FAN *(contd.)* i02928821

NOTE	REF NO	GRAPHIC REF	PART NUMBER	QTY	PART NAME 1 2 3 4 5 6 (PRODUCT LEVEL)	SEE PAGE
C	32	2	*148-8353*	1	ELBOW AS	
		2	**3J-1907**	1	SEAL-O-RING	
		2	**6V-8397**	1	SEAL-O-RING	
		2	**6V-9001**	1	ELBOW	
	33	2	*148-8388*	1	ELBOW AS	
		2	**2M-9780**	1	SEAL-O-RING	
		2	**6V-8629**	1	ELBOW	
		2	**6V-9746**	1	SEAL-O-RING	
	34	3	*148-8372*	1	ELBOW AS	
		3	**2M-9780**	1	SEAL-O-RING	
		3	**6V-8398**	1	SEAL-O-RING	
		3	**6V-8721**	1	ELBOW	
	35	2	*148-8376*	1	ELBOW AS	
		2	**6V-8983**	1	ELBOW	
		2	**6V-9746**	2	SEAL-O-RING	
	36	4	*148-8418*	1	REDUCER AS	
		4	**6V-8398**	1	SEAL-O-RING	
		4	**6V-8942**	1	REDUCER-O-RING	
	37	4	*148-8449*	1	TEE AS-SWIVEL	
		4	**6V-9746**	2	SEAL-O-RING	
		4	**6V-9839**	1	TEE-SWIVEL	
	38	4	*150-4027*	1	TEE AS	
		4	**3E-2310**	1	TEE	
		4	**3J-1907**	1	SEAL-O-RING	
		4	**6V-8397**	1	SEAL-O-RING	
	39	2	*150-4037*	1	TEE AS	
		2	**6V-8398**	2	SEAL-O-RING	
		2	**6V-9844**	1	TEE-SWIVEL	
	40	2	*150-4043*	1	CONNECTOR AS	
		2	**3J-1907**	1	SEAL-O-RING	
		2	**6V-8398**	1	SEAL-O-RING	
		2	**6V-9873**	1	CONNECTOR	
	41	4	*153-6236*	1	REDUCER AS	
		4	**6V-8946**	1	REDUCER	
		4	**6V-9746**	1	SEAL-O-RING	
	42	4	*153-6237*	1	ELBOW AS	
		4	**3D-2824**	1	SEAL-O-RING	
		4	**6V-9004**	1	ELBOW	
		4	**6V-9746**	1	SEAL-O-RING	
	43	2	*155-3624*	1	PLUG AS	
		2	**3J-7354**	1	SEAL-O-RING	
		2	**9S-4182**	1	PLUG-O-RING	
I	44	1	**155-7517**	1	HOSE AS	
I	45	1	**155-7528**	1	HOSE AS	
	46	4	*164-5567*	1	COUPLER AS-QUICK DISCONNECT	
		4	**3J-1907**	1	SEAL-O-RING	
		4	**6V-3965**	1	FITTING (QUICK DISCONNECT)	
	47	3	*164-5574*	1	TEE AS	
		3	**3D-2824**	1	SEAL-O-RING	
		3	**6V-8784**	1	TEE-FACE SEAL	
		3	**6V-9746**	2	SEAL-O-RING	
	48	4	*164-6862*	1	TEE AS	
		4	**6V-9160**	1	TEE-FACE SEAL	
		4	**6V-9746**	3	SEAL-O-RING	
	49	4	**1P-4579**	2	FLANGE-HALF	
	50	2	**1P-4582**	2	FLANGE-HALF	
	51	1,3,4	**1S-6420**	4	CLIP	
	52	2,4	**2P-1293**	2	LOCKNUT (1-3/16-12-THD)	
	53	3	**3D-2824**	1	SEAL-O-RING	

225-6716 LINES GP-HYDRAULIC FAN *(contd.)* i02928821

NOTE	REF NO	GRAPHIC REF	PART NUMBER	QTY	PART NAME 1 2 3 4 5 6 (PRODUCT LEVEL)	SEE PAGE
	54	3,4	**3P-2404**	2	CLIP	
	55	2,4	**4J-0520**	3	SEAL-O-RING	
	56	4	**4J-0524**	2	SEAL-O-RING	
	57	2	**4J-0527**	1	SEAL-O-RING	
C	58	2	**5K-5338**	1	CLIP	
	59	4	**5K-9090**	1	SEAL-O-RING	
	60	2	**5P-7470**	1	CLIP (SLOT)	
	61	2	**5P-7471**	1	CLIP (TAB)	
	62	2	**5P-7703**	2	GROMMET	
	63	1	**5P-7854**	2	CLIP	
C	64	2	**6D-4636**	1	CLIP	
	65	1,2	**6V-1889**	8	CLIP	
	66	3	**6V-9746**	1	SEAL-O-RING	
	67	4	**7M-8485**	1	SEAL-O-RING	
C	68	2	**7X-7729**	1	WASHER (11X25X3-MM THK)	
	69	2,4	**8C-3206**	4	FLANGE-HALF	
	70	1,3,4	**8D-9947**	3	CLIP	
	71	1,2,4	**8T-4121**	34	WASHER-HARD (11X21X2.5-MM THK)	
CM	72	2	**8T-4133**	2	NUT (M10X1.5-THD)	
M	73	1,2,4	**8T-4136**	13	BOLT (M10X1.5X25-MM)	
M	74	1,2	**8T-4137**	5	BOLT (M10X1.5X20-MM)	
M	75	2,3,4	**8T-4139**	3	BOLT (M12X1.75X30-MM)	
M	76	4	**8T-4178**	2	BOLT (M10X1.5X90-MM)	
M	77	2	**8T-4182**	2	BOLT (M10X1.5X45-MM)	
M	78	2	**8T-4184**	4	BOLT (M12X1.75X45-MM)	
M	79	2	**8T-4196**	4	BOLT (M10X1.5X35-MM)	
	80	2,3,4	**8T-4223**	13	WASHER-HARD (13.5X25.5X3-MM THK)	
M	81	3,4	**8T-4648**	6	BOLT (M12X1.75X70-MM)	
CM	82	2,4	**8T-5005**	5	BOLT (M10X1.5X70-MM)	
	83	4	**9X-6580**	1	NUT (1-3/16-12-THD)	
	84	2	**294-0058**	1	PLATE	
M	85	2	**8T-4195**	3	BOLT (M10X1.5X30-MM)	
	86	2	**3E-8026**	1	CLIP (SLOT)	
	87	2	**3E-8027**	1	CLIP (TAB)	
	88	2	**144-4613**	1	ANGLE AS	

C-CHANGE FROM PREVIOUS TYPE
I-REFER TO HYDRAULIC INFORMATION SYSTEM
M-METRIC PART
Y-SEPARATE ILLUSTRATION

225-6716 LINES GP-HYDRAULIC FAN *(contd.)* i02928821

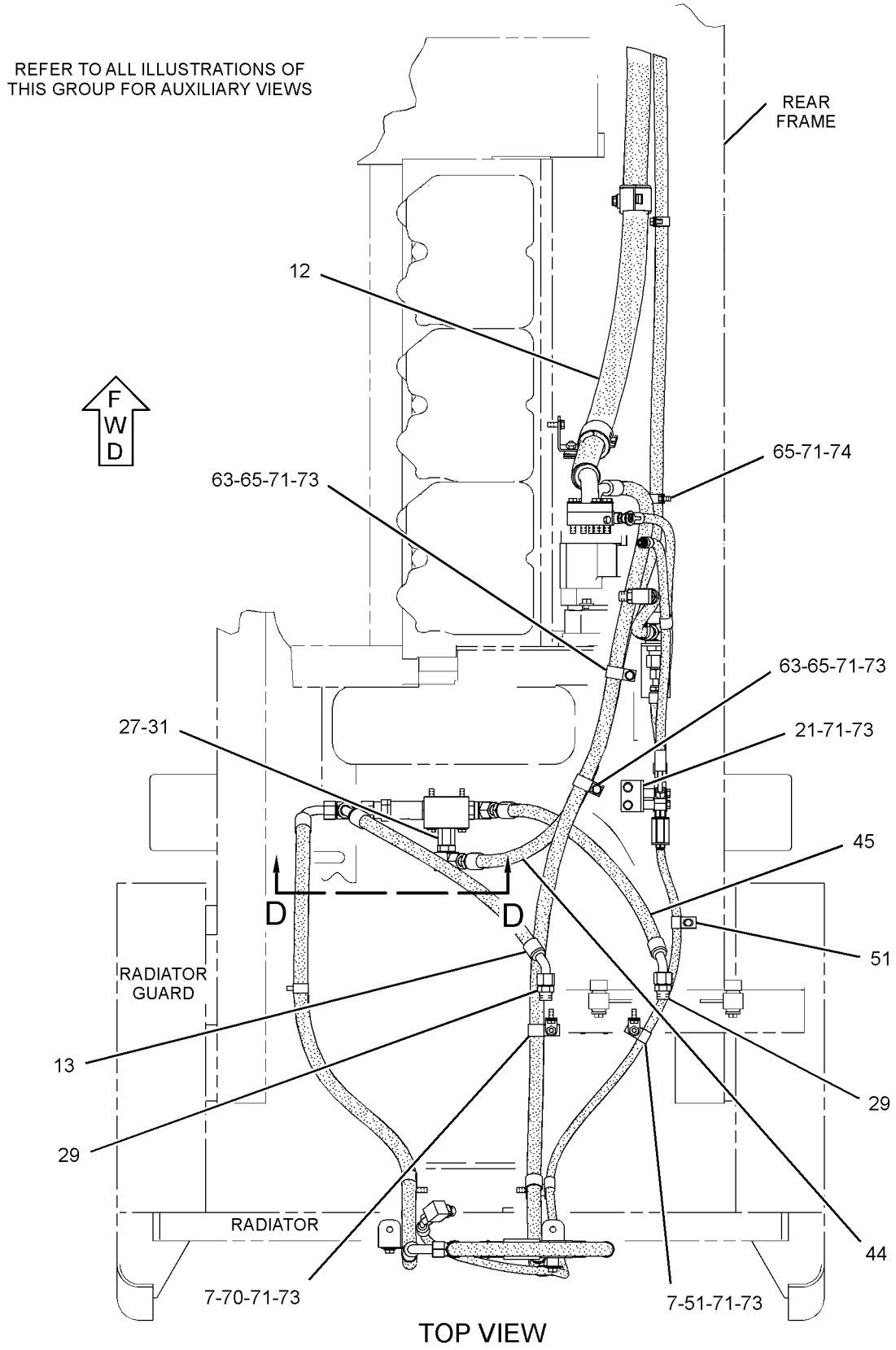

GRAPHIC #1 g01456129

225-6716 **LINES GP-HYDRAULIC FAN** *(contd.)* **i02928821**

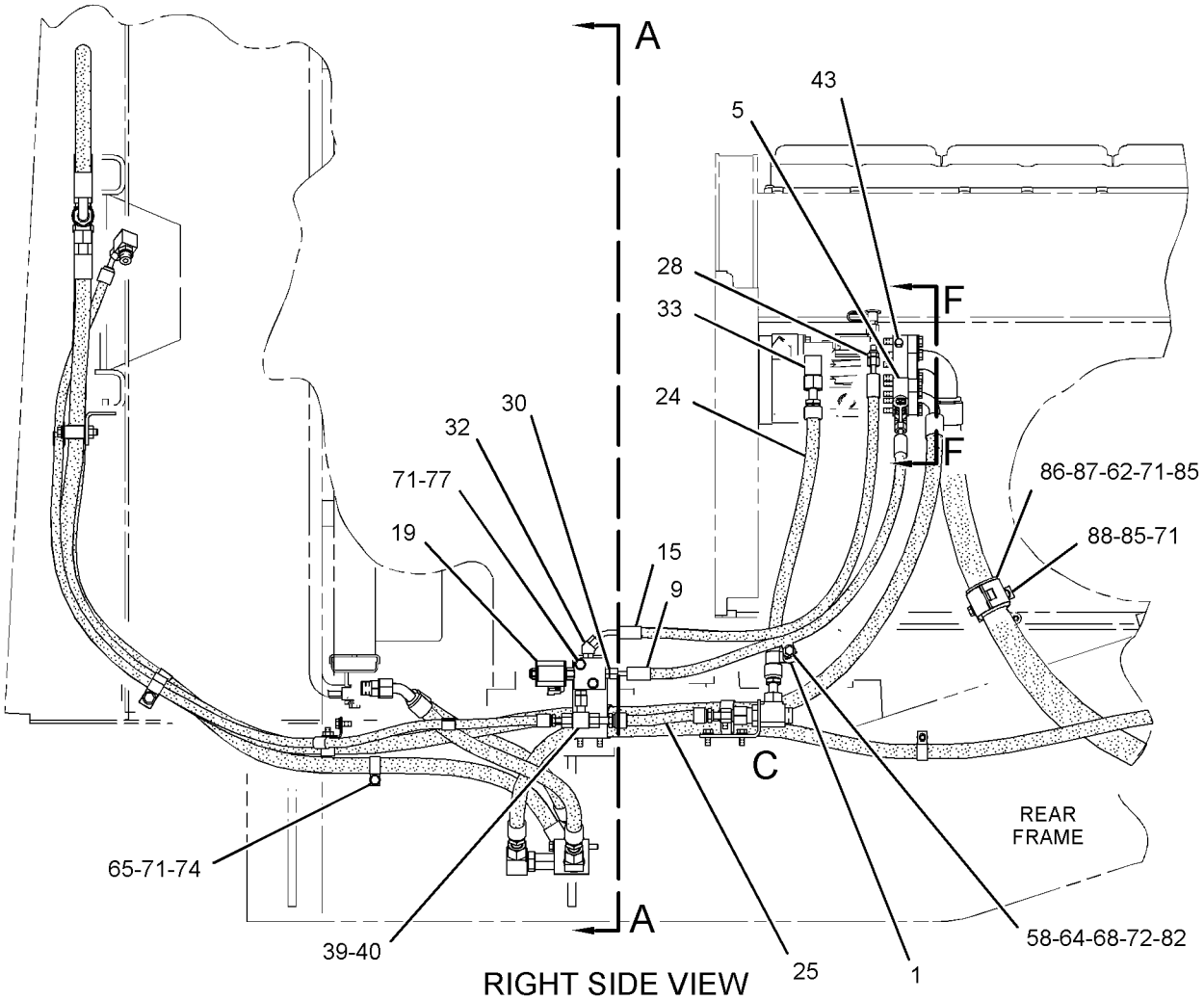

RIGHT SIDE VIEW

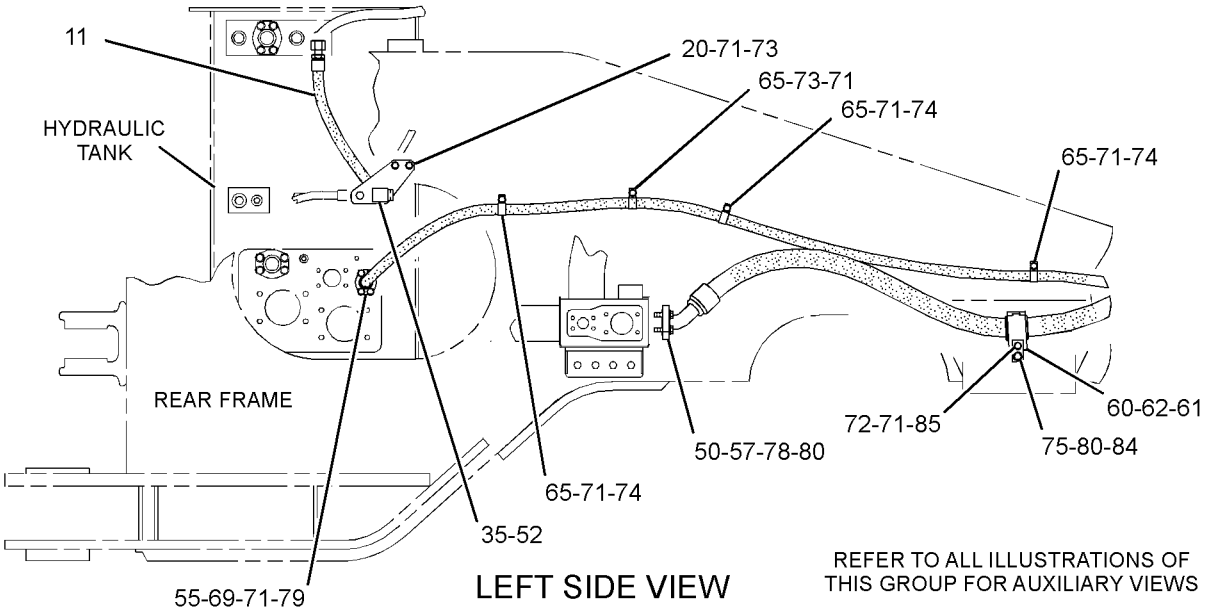

LEFT SIDE VIEW

REFER TO ALL ILLUSTRATIONS OF THIS GROUP FOR AUXILIARY VIEWS

GRAPHIC #2 g01456130

225-6716 LINES GP-HYDRAULIC FAN *(contd.)* i02928821

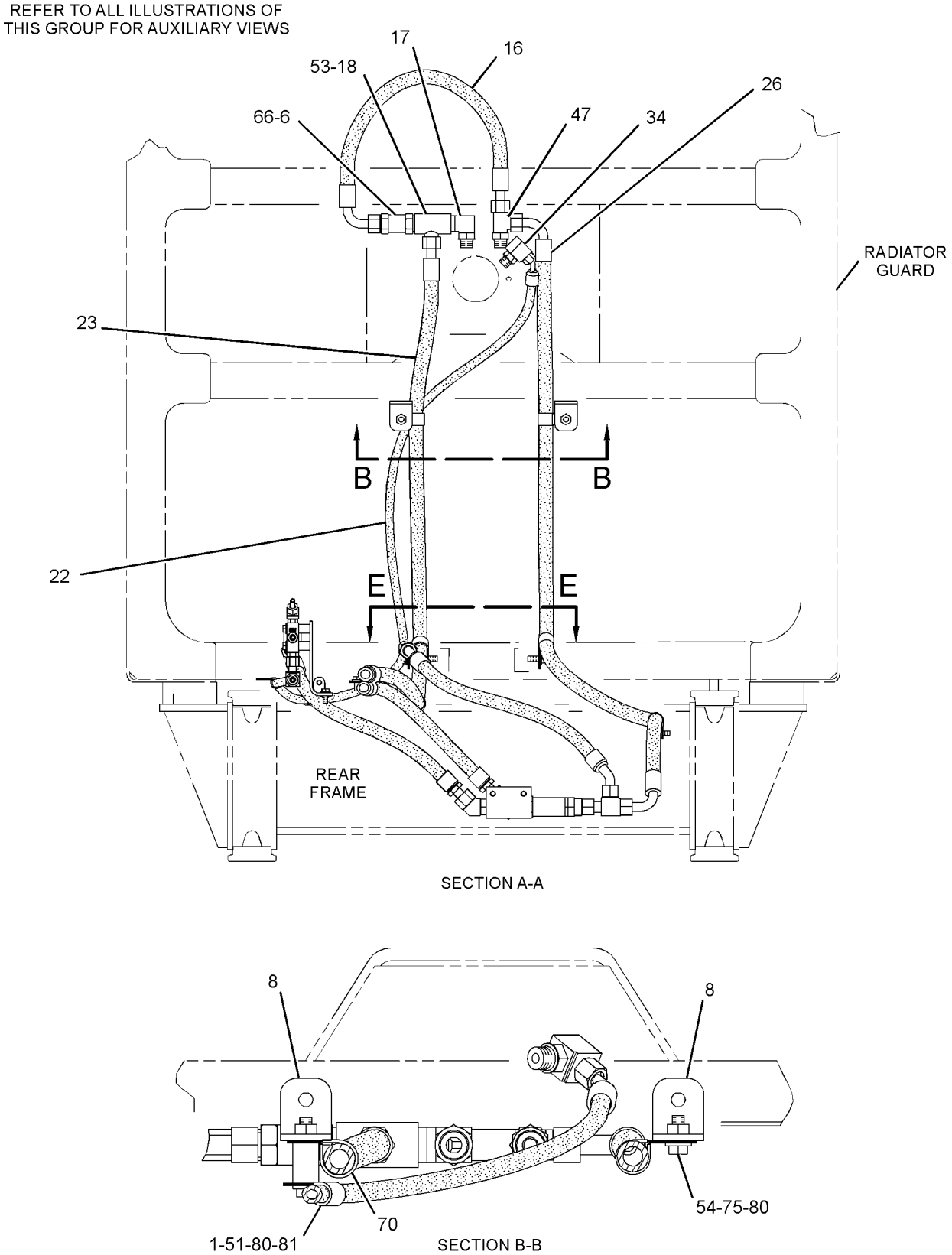

GRAPHIC #3 g01456128

225-6716 **LINES GP-HYDRAULIC FAN** *(contd.)* **i02928821**

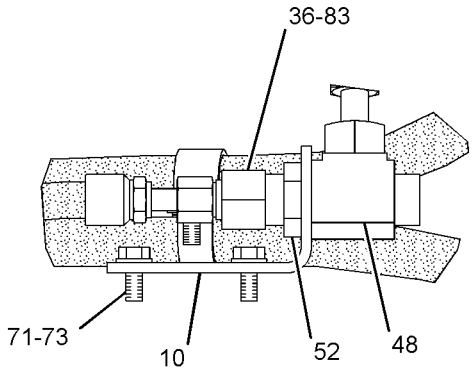

VIEW OF AREA C

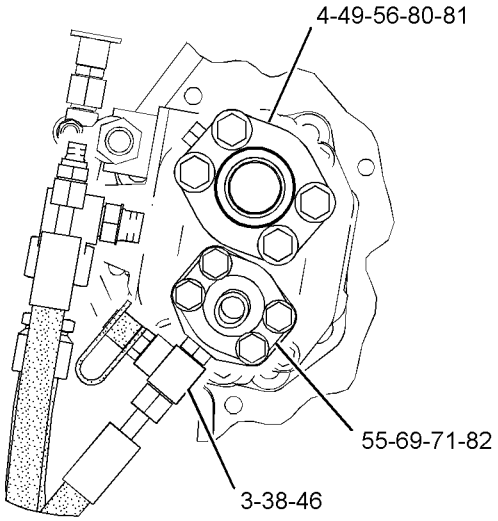

VIEW F-F

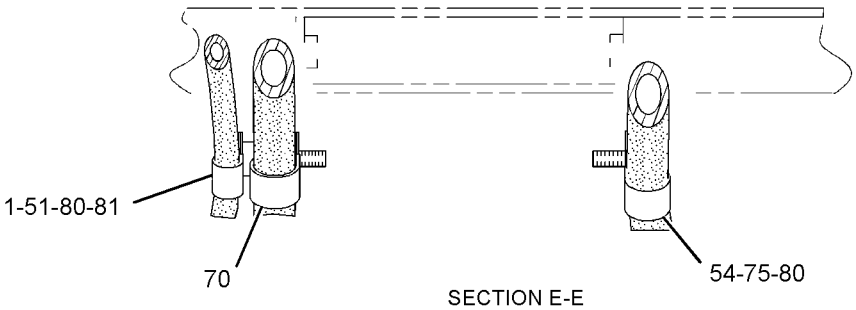

SECTION E-E

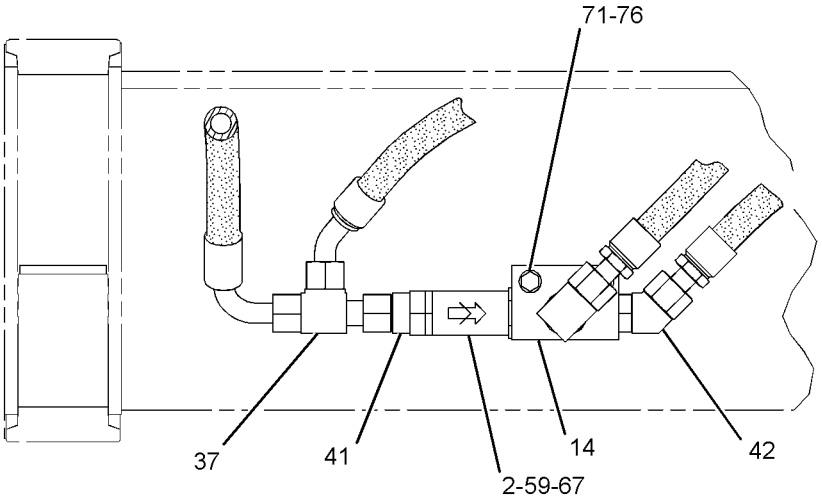

SECTION D-D

GRAPHIC #4 **<END>** g01338786

HYDRAULIC SYSTEM

225-6716 LINES GP-HYDRAULIC FAN

S/N: BXY2399-3999

PART OF 298-2038 HYDRAULIC AR

SMCS-1386, 1387, 5057 **i03081127**

NOTE	REF NO	GRAPHIC REF	PART NUMBER	QTY	PART NAME 1 2 3 4 5 6 (PRODUCT LEVEL)	SEE PAGE
	1	2,3,4	**1F-1609**	3	SPACER (13.5X25.4X39.7-MM THK)	
	2	4	**6E-1454**	1	VALVE GP-CHECK (HYDRAULIC OIL COOLER BYPASS)	
	3	4	**8C-3451**	1	CAP-DUST	
	4	2	**8R-0752**	1	ADAPTER	
	5	2	**9J-3866**	1	ADAPTER	
	6	3	**9T-3752**	1	VALVE AS-CHECK (FAN MOTOR ANTI-CAVITATION)	
	7	1	**124-3019**	2	BRACKET AS	
					(EACH INCLUDES)	
M		1	**8T-3490**	1	NUT-WELD (M10X1.5-THD)	
	8	3	**145-3319**	2	BRACKET AS	
					(EACH INCLUDES)	
M		3	**8T-3597**	1	NUT-WELD (M12X1.75-THD)	
I	9	2	**152-7737**	1	HOSE AS	
	10	4	**154-8962**	1	BRACKET	
I	11	2	**155-7518**	1	HOSE AS	
I	12	1	**290-3265**	1	HOSE AS	
I	13	1	**155-7527**	1	HOSE AS	
	14	4	**156-7472**	1	MANIFOLD	
I	15	2	**161-6403**	1	HOSE AS	
I	16	3	**162-7365**	1	HOSE AS	
	17	3	*167-1795*	1	ELBOW AS	
		3	**3D-2824**	1	SEAL-O-RING	
		3	**8T-3491**	1	ELBOW	
	18	3	*172-5277*	1	TEE AS	
		3	**3D-2824**	1	SEAL-O-RING	
		3	**6V-9746**	1	SEAL-O-RING	
		3	**8T-8901**	1	TEE-O-RING PORT	
Y	19	2	**191-8735**	1	VALVE GP-DEMAND FAN	1616
	20	2	**198-1854**	1	PLATE	
	21	1	**225-6717**	1	PLATE AS	
M		1	**9R-2613**	2	BOSS-WELD (M10X1.5X25-MM)	
I	22	3	**225-6719**	1	HOSE AS	
I	23	3	**225-6720**	1	HOSE AS	
CI	24	2	**314-7938**	1	HOSE AS	
I	25	2	**225-6724**	1	HOSE AS	
I	26	3	**239-9233**	1	HOSE AS	
	27	1	*148-8312*	1	ADAPTER AS	
		1	**3D-2824**	1	SEAL-O-RING	
		1	**3T-4965**	1	ADAPTER-O-RING	
	28	2	*148-8326*	1	CONNECTOR AS	
		2	**3J-7354**	1	SEAL-O-RING	
		2	**6V-8397**	1	SEAL-O-RING	
		2	**6V-9872**	1	CONNECTOR	
	29	1	*148-8327*	2	CONNECTOR AS	
					(EACH INCLUDES)	
		1	**3D-2824**	1	SEAL-O-RING	
		1	**6V-8637**	1	CONNECTOR	
		1	**6V-9746**	1	SEAL-O-RING	
	30	2	*148-8336*	1	CONNECTOR AS	
		2	**3J-1907**	1	SEAL-O-RING	
		2	**6V-8397**	1	SEAL-O-RING	
		2	**6V-8636**	1	CONNECTOR	
	31	1	*148-8347*	1	ELBOW AS	
		1	**3D-2824**	1	SEAL-O-RING	
		1	**6V-9007**	1	ELBOW	
		1	**6V-9746**	1	SEAL-O-RING	

225-6716 LINES GP-HYDRAULIC FAN (contd.) i03081127

NOTE	REF NO	GRAPHIC REF	PART NUMBER	QTY	PART NAME 1 2 3 4 5 6 (PRODUCT LEVEL)	SEE PAGE
	32	2	148-8353	1	ELBOW AS	
		2	3J-1907	1	SEAL-O-RING	
		2	6V-8397	1	SEAL-O-RING	
		2	6V-9001	1	ELBOW	
C	33	4	148-8322	1	CONNECTOR AS	
		4	2M-9780	1	SEAL-O-RING	
		4	6V-8640	1	CONNECTOR	
		4	6V-9746	1	SEAL-O-RING	
	34	3	148-8372	1	ELBOW AS	
		3	2M-9780	1	SEAL-O-RING	
		3	6V-8398	1	SEAL-O-RING	
		3	6V-8721	1	ELBOW	
	35	2	148-8376	1	ELBOW AS	
		2	6V-8983	1	ELBOW	
		2	6V-9746	2	SEAL-O-RING	
	36	4	148-8418	1	REDUCER AS	
		4	6V-8398	1	SEAL-O-RING	
		4	6V-8942	1	REDUCER-O-RING	
	37	4	148-8449	1	TEE AS-SWIVEL	
		4	6V-9746	2	SEAL-O-RING	
		4	6V-9839	1	TEE-SWIVEL	
	38	4	150-4027	1	TEE AS	
		4	3E-2310	1	TEE	
		4	3J-1907	1	SEAL-O-RING	
		4	6V-8397	1	SEAL-O-RING	
	39	2	150-4037	1	TEE AS	
		2	6V-8398	2	SEAL-O-RING	
		2	6V-9844	1	TEE-SWIVEL	
	40	2	150-4043	1	CONNECTOR AS	
		2	3J-1907	1	SEAL-O-RING	
		2	6V-8398	1	SEAL-O-RING	
		2	6V-9873	1	CONNECTOR	
	41	4	153-6236	1	REDUCER AS	
		4	6V-8946	1	REDUCER	
		4	6V-9746	1	SEAL-O-RING	
	42	4	153-6237	1	ELBOW AS	
		4	3D-2824	1	SEAL-O-RING	
		4	6V-9004	1	ELBOW	
		4	6V-9746	1	SEAL-O-RING	
	43	2	155-3624	1	PLUG AS	
		2	3J-7354	1	SEAL-O-RING	
		2	9S-4182	1	PLUG-O-RING	
I	44	1	155-7517	1	HOSE AS	
I	45	1	155-7528	1	HOSE AS	
	46	4	164-5567	1	COUPLER AS-QUICK DISCONNECT	
		4	214-7568	1	SEAL-O-RING	
		4	6V-3965	1	FITTING (QUICK DISCONNECT)	
	47	3	164-5574	1	TEE AS	
		3	3D-2824	1	SEAL-O-RING	
		3	6V-8784	1	TEE-FACE SEAL	
		3	6V-9746	2	SEAL-O-RING	
	48	4	164-6862	1	TEE AS	
		4	6V-9160	1	TEE-FACE SEAL	
		4	6V-9746	3	SEAL-O-RING	
	49	4	1P-4579	2	FLANGE-HALF	
	50	2	1P-4582	2	FLANGE-HALF	
	51	1,3,4	1S-6420	4	CLIP	
	52	2,4	2P-1293	2	LOCKNUT (1-3/16-12-THD)	
	53	3	3D-2824	1	SEAL-O-RING	

225-6716 LINES GP-HYDRAULIC FAN *(contd.)* i03081127

NOTE	REF NO	GRAPHIC REF	PART NUMBER	QTY	PART NAME 1 2 3 4 5 6 (PRODUCT LEVEL)	SEE PAGE
	54	3,4	**3P-2404**	2	CLIP	
	55	2,4	**4J-0520**	3	SEAL-O-RING	
	56	4	**4J-0524**	2	SEAL-O-RING	
	57	2	**4J-0527**	1	SEAL-O-RING	
	58	2	**5K-5338**	1	CLIP	
	59	4	**5K-9090**	1	SEAL-O-RING	
	60	2	**5P-7470**	1	CLIP (SLOT)	
	61	2	**5P-7471**	1	CLIP (TAB)	
	62	2	**5P-7703**	2	GROMMET	
	63	1	**5P-7854**	2	CLIP	
	64	2	**6D-4636**	1	CLIP	
	65	1,2	**6V-1889**	8	CLIP	
	66	3	**6V-9746**	1	SEAL-O-RING	
	67	4	**7M-8485**	1	SEAL-O-RING	
	68	2	**7X-7729**	1	WASHER (11X25X3-MM THK)	
	69	2,4	**8C-3206**	4	FLANGE-HALF	
	70	1,3,4	**8D-9947**	3	CLIP	
	71	1,2,4	**8T-4121**	34	WASHER-HARD (11X21X2.5-MM THK)	
M	72	2	**8T-4133**	2	NUT (M10X1.5-THD)	
M	73	1,2,4	**8T-4136**	13	BOLT (M10X1.5X25-MM)	
M	74	1,2	**8T-4137**	5	BOLT (M10X1.5X20-MM)	
M	75	2,3,4	**8T-4139**	3	BOLT (M12X1.75X30-MM)	
M	76	4	**8T-4178**	2	BOLT (M10X1.5X90-MM)	
M	77	2	**8T-4182**	2	BOLT (M10X1.5X45-MM)	
M	78	2	**8T-4184**	4	BOLT (M12X1.75X45-MM)	
M	79	2	**8T-4196**	4	BOLT (M10X1.5X35-MM)	
	80	2,3,4	**8T-4223**	13	WASHER-HARD (13.5X25.5X3-MM THK)	
M	81	3,4	**8T-4648**	6	BOLT (M12X1.75X70-MM)	
M	82	2,4	**8T-5005**	5	BOLT (M10X1.5X70-MM)	
	83	4	**9X-6580**	1	NUT (1-3/16-12-THD)	
	84	2	**294-0058**	1	PLATE	
M	85	2	**8T-4195**	3	BOLT (M10X1.5X30-MM)	
	86	2	**3E-8026**	1	CLIP (SLOT)	
	87	2	**3E-8027**	1	CLIP (TAB)	
	88	2	**144-4613**	1	ANGLE AS	
M		2	**8T-3490**	1	NUT-WELD (M10X1.5-THD)	

C-CHANGE FROM PREVIOUS TYPE
I-REFER TO HYDRAULIC INFORMATION SYSTEM
M-METRIC PART
Y-SEPARATE ILLUSTRATION

225-6716 LINES GP-HYDRAULIC FAN *(contd.)* i03081127

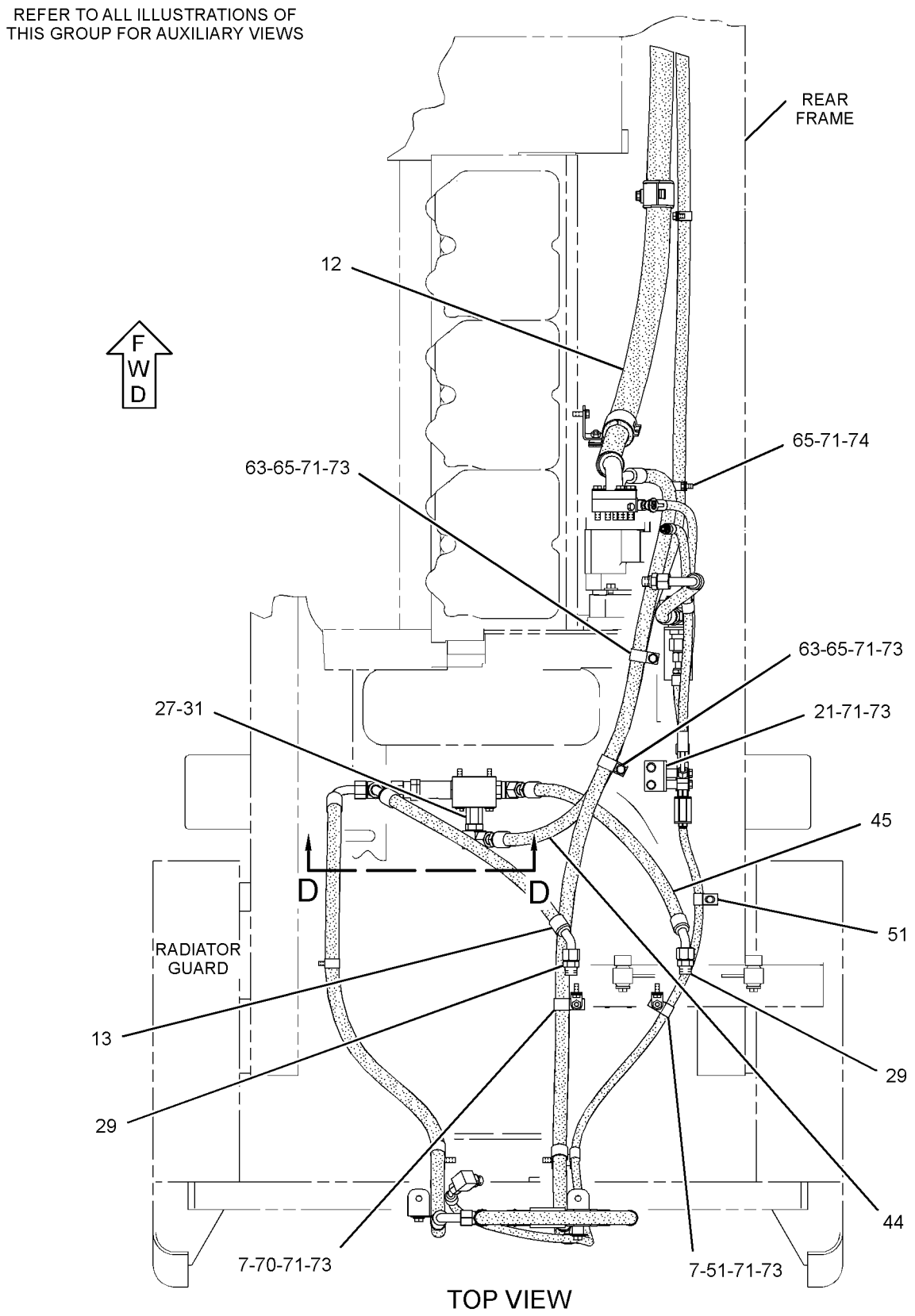

GRAPHIC #1 g01603519

225-6716 **LINES GP-HYDRAULIC FAN** *(contd.)* **i03081127**

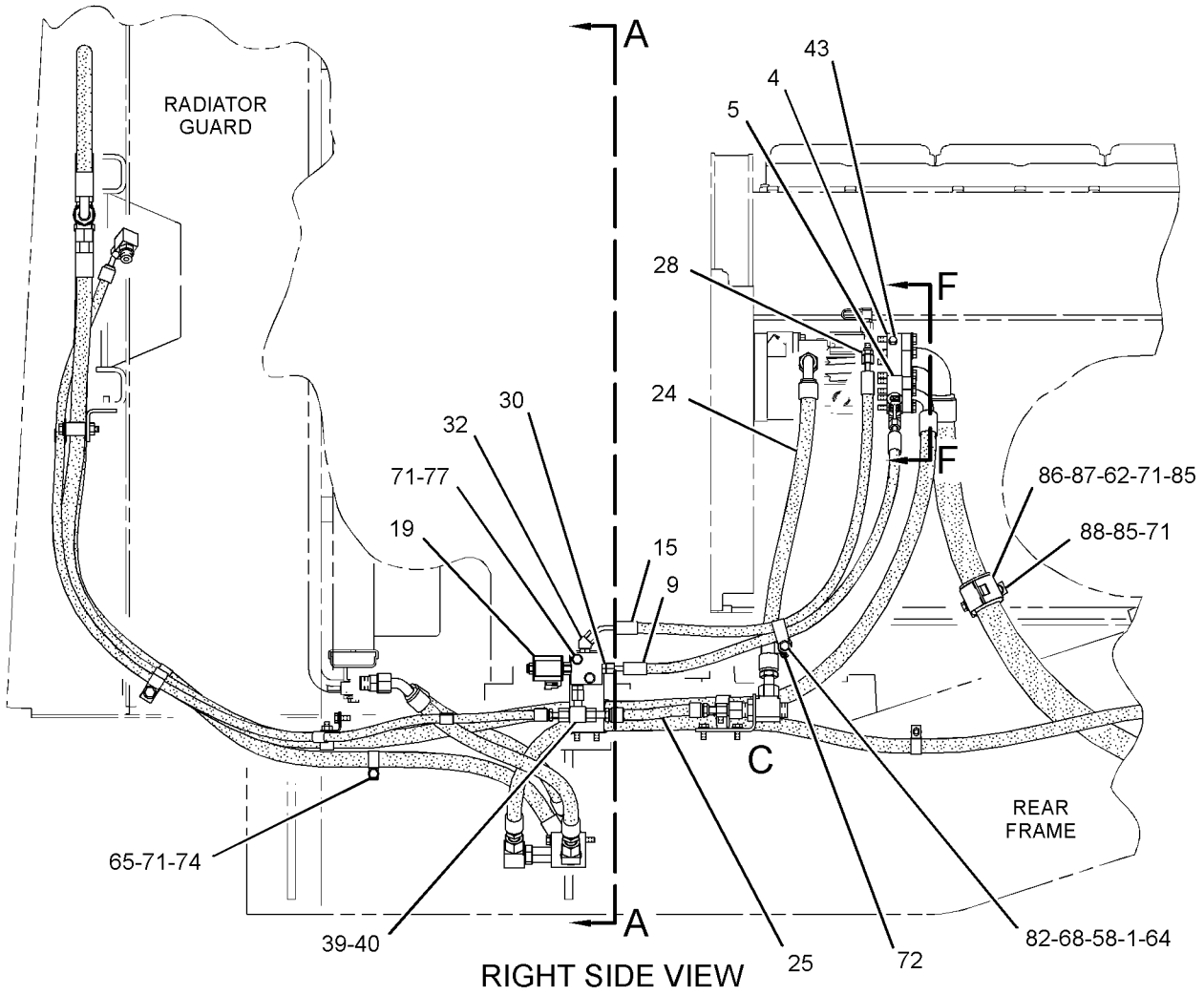

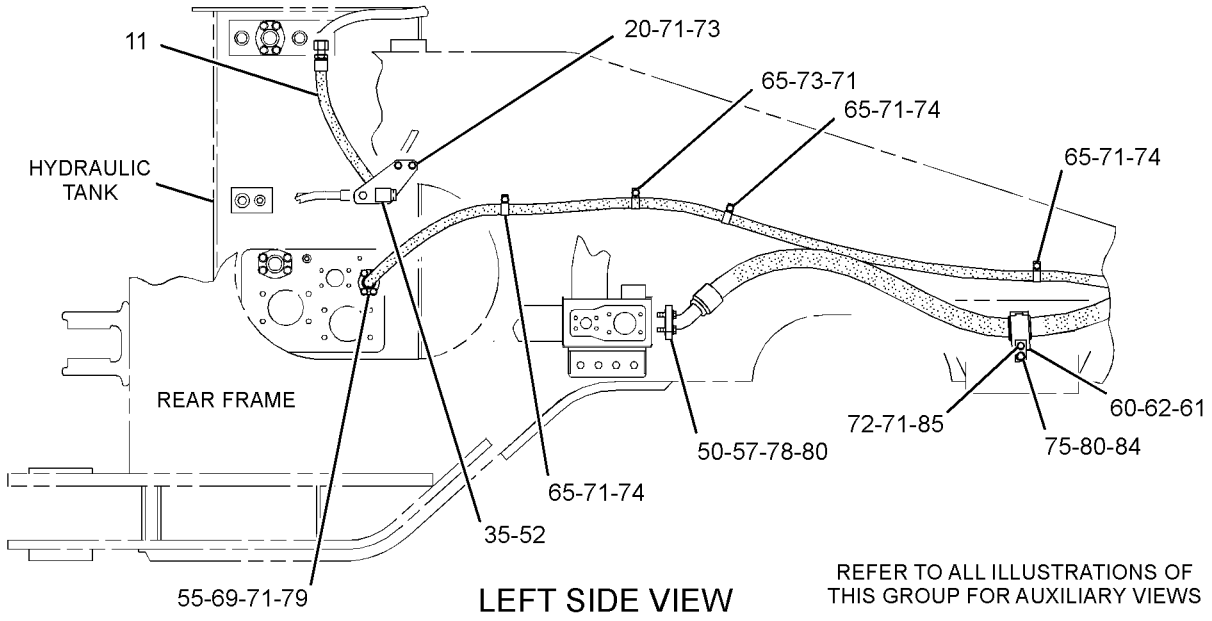

REFER TO ALL ILLUSTRATIONS OF THIS GROUP FOR AUXILIARY VIEWS

GRAPHIC #2

g01603521

225-6716 **LINES GP-HYDRAULIC FAN** *(contd.)* **i03081127**

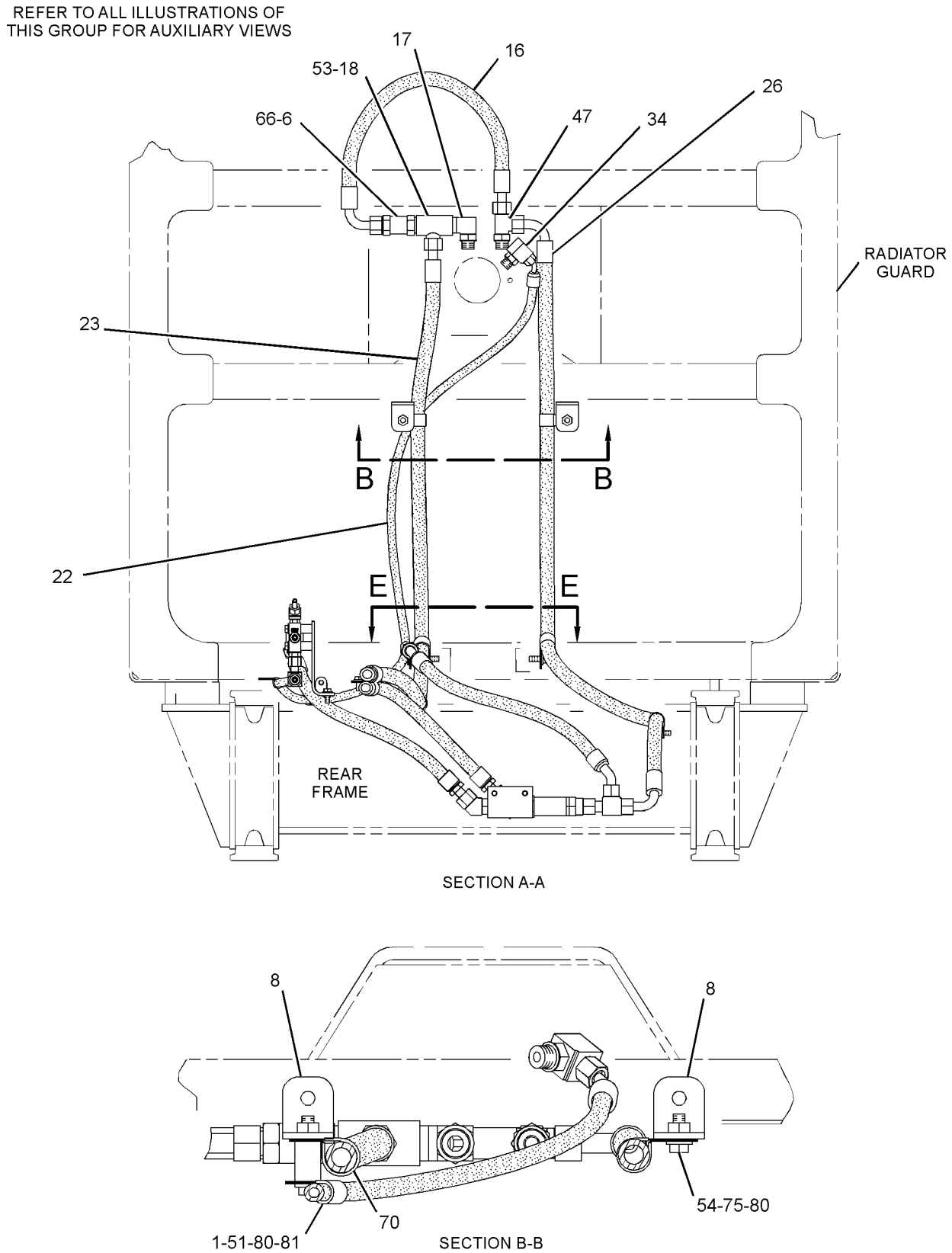

GRAPHIC #3 g01456128

225-6716 **LINES GP-HYDRAULIC FAN** *(contd.)* **i03081127**

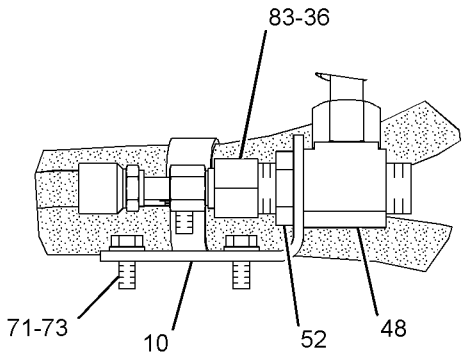

VIEW OF AREA C

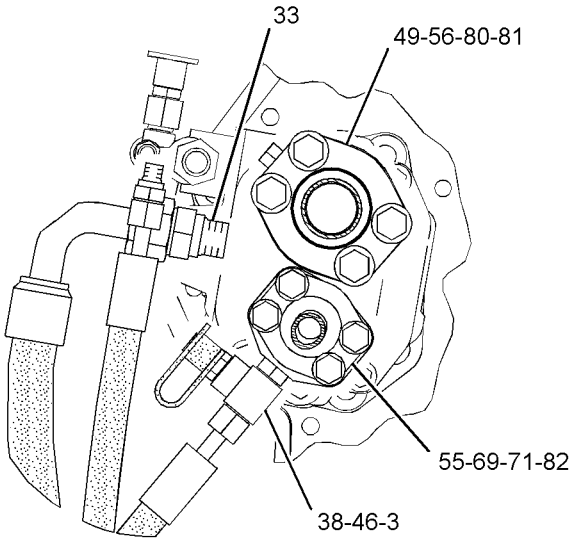

SECTION F-F

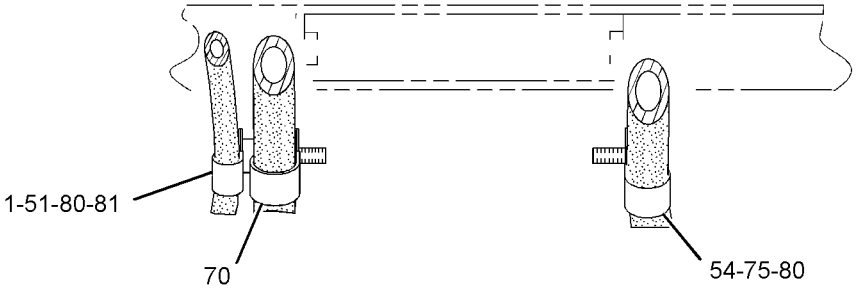

SECTION E-E

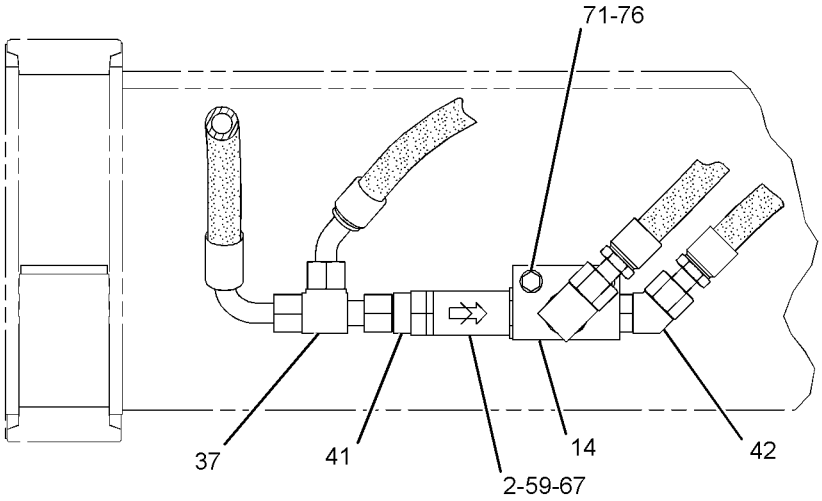

SECTION D-D

GRAPHIC #4 **<END>** g01603522

HYDRAULIC SYSTEM

225-6716 LINES GP-HYDRAULIC FAN

S/N: BXY4000-UP

PART OF 345-3930 HYDRAULIC AR

SMCS-1386, 1387, 5057 **i03782590**

NOTE	REF NO	GRAPHIC REF	PART NUMBER	QTY	PART NAME 1 2 3 4 5 6 (PRODUCT LEVEL)	SEE PAGE
C	1	2,3	**1F-1609**	2	SPACER (13.5X25.4X39.7-MM THK)	
	2	4	**6E-1454**	1	VALVE GP-CHECK (HYDRAULIC OIL COOLER BYPASS)	
	3	4	**8C-3451**	1	CAP-DUST	
	4	2	**8R-0752**	1	ADAPTER	
	5	2	**9J-3866**	1	ADAPTER	
	6	3	**9T-3752**	1	VALVE AS-CHECK (FAN MOTOR ANTI-CAVITATION)	
	7	1	**124-3019**	2	BRACKET AS	
					(EACH INCLUDES)	
M		1	**8T-3490**	1	NUT-WELD (M10X1.5-THD)	
C	8	3	**145-3319**	1	BRACKET AS	
M		3	**8T-3597**	1	NUT-WELD (M12X1.75-THD)	
I	9	2	**152-7737**	1	HOSE AS	
	10	4	**154-8962**	1	BRACKET	
I	11	2	**155-7518**	1	HOSE AS	
I	12	1	**290-3265**	1	HOSE AS	
I	13	1	**155-7527**	1	HOSE AS	
	14	4	**156-7472**	1	MANIFOLD	
I	15	2	**161-6403**	1	HOSE AS	
I	16	3	**162-7365**	1	HOSE AS	
	17	3	*167-1795*	1	ELBOW AS	
		3	**3D-2824**	1	SEAL-O-RING	
		3	**8T-3491**	1	ELBOW	
	18	3	*172-5277*	1	TEE AS	
		3	**3D-2824**	1	SEAL-O-RING	
		3	**6V-9746**	1	SEAL-O-RING	
		3	**8T-8901**	1	TEE-O-RING PORT	
Y	19	2	**191-8735**	1	VALVE GP-DEMAND FAN	1616
	20	2	**198-1854**	1	PLATE	
	21	1	**225-6717**	1	PLATE AS	
M		1	**9R-2613**	2	BOSS-WELD (M10X1.5X25-MM)	
I	22	3	**225-6719**	1	HOSE AS	
I	23	3	**225-6720**	1	HOSE AS	
I	24	2	**314-7938**	1	HOSE AS	
I	25	2	**225-6724**	1	HOSE AS	
I	26	3	**239-9233**	1	HOSE AS	
	27	1	*148-8312*	1	ADAPTER AS	
		1	**3D-2824**	1	SEAL-O-RING	
		1	**3T-4965**	1	ADAPTER-O-RING	
	28	2	*148-8326*	1	CONNECTOR AS	
		2	**3J-7354**	1	SEAL-O-RING	
		2	**6V-8397**	1	SEAL-O-RING	
		2	**6V-9872**	1	CONNECTOR	
	29	1	*148-8327*	2	CONNECTOR AS	
					(EACH INCLUDES)	
		1	**3D-2824**	1	SEAL-O-RING	
		1	**6V-8637**	1	CONNECTOR	
		1	**6V-9746**	1	SEAL-O-RING	
	30	2	*148-8336*	1	CONNECTOR AS	
		2	**3J-1907**	1	SEAL-O-RING	
		2	**6V-8397**	1	SEAL-O-RING	
		2	**6V-8636**	1	CONNECTOR	
	31	1	*148-8347*	1	ELBOW AS	
		1	**3D-2824**	1	SEAL-O-RING	
		1	**6V-9007**	1	ELBOW	
		1	**6V-9746**	1	SEAL-O-RING	
	32	2	*148-8353*	1	ELBOW AS	

HYDRAULIC SYSTEM

225-6716 LINES GP-HYDRAULIC FAN *(contd.)* i03782590

NOTE	REF NO	GRAPHIC REF	PART NUMBER	QTY	PART NAME 1 2 3 4 5 6 (PRODUCT LEVEL)	SEE PAGE
		2	**3J-1907**	1	SEAL-O-RING	
		2	**6V-8397**	1	SEAL-O-RING	
		2	**6V-9001**	1	ELBOW	
	33	4	*148-8322*	1	CONNECTOR AS	
		4	**2M-9780**	1	SEAL-O-RING	
		4	**6V-8640**	1	CONNECTOR	
		4	**6V-9746**	1	SEAL-O-RING	
	34	3	*148-8372*	1	ELBOW AS	
		3	**2M-9780**	1	SEAL-O-RING	
		3	**6V-8398**	1	SEAL-O-RING	
		3	**6V-8721**	1	ELBOW	
	35	2	*148-8376*	1	ELBOW AS	
		2	**6V-8983**	1	ELBOW	
		2	**6V-9746**	2	SEAL-O-RING	
	36	4	*148-8418*	1	REDUCER AS	
		4	**6V-8398**	1	SEAL-O-RING	
		4	**6V-8942**	1	REDUCER-O-RING	
	37	4	*148-8449*	1	TEE AS-SWIVEL	
		4	**6V-9746**	2	SEAL-O-RING	
		4	**6V-9839**	1	TEE-SWIVEL	
	38	4	*150-4027*	1	TEE AS	
		4	**3E-2310**	1	TEE	
		4	**3J-1907**	1	SEAL-O-RING	
		4	**6V-8397**	1	SEAL-O-RING	
	39	2	*150-4037*	1	TEE AS	
		2	**6V-8398**	2	SEAL-O-RING	
		2	**6V-9844**	1	TEE-SWIVEL	
	40	2	*150-4043*	1	CONNECTOR AS	
		2	**3J-1907**	1	SEAL-O-RING	
		2	**6V-8398**	1	SEAL-O-RING	
		2	**6V-9873**	1	CONNECTOR	
	41	4	*153-6236*	1	REDUCER AS	
		4	**6V-8946**	1	REDUCER	
		4	**6V-9746**	1	SEAL-O-RING	
	42	4	*153-6237*	1	ELBOW AS	
		4	**3D-2824**	1	SEAL-O-RING	
		4	**6V-9004**	1	ELBOW	
		4	**6V-9746**	1	SEAL-O-RING	
	43	2	*155-3624*	1	PLUG AS	
		2	**3J-7354**	1	SEAL-O-RING	
		2	**9S-4182**	1	PLUG-O-RING	
I	44	1	**155-7517**	1	HOSE AS	
I	45	1	**155-7528**	1	HOSE AS	
	46	4	*164-5567*	1	COUPLER AS-QUICK DISCONNECT	
		4	**214-7568**	1	SEAL-O-RING	
		4	**6V-3965**	1	FITTING (QUICK DISCONNECT)	
	47	3	*164-5574*	1	TEE AS	
		3	**3D-2824**	1	SEAL-O-RING	
		3	**6V-8784**	1	TEE-FACE SEAL	
		3	**6V-9746**	2	SEAL-O-RING	
	48	4	*164-6862*	1	TEE AS	
		4	**6V-9160**	1	TEE-FACE SEAL	
		4	**6V-9746**	3	SEAL-O-RING	
	49	4	**1P-4579**	2	FLANGE-HALF	
	50	2	**1P-4582**	2	FLANGE-HALF	
C	51	1,3,4	**8M-2773**	4	CLIP	
	52	2,4	**2P-1293**	2	LOCKNUT (1-3/16-12-THD)	
	53	3	**3D-2824**	1	SEAL-O-RING	
	54	3,4	**3P-2404**	2	CLIP	

225-6716 LINES GP-HYDRAULIC FAN *(contd.)* i03782590

NOTE	REF NO	GRAPHIC REF	PART NUMBER	QTY	PART NAME 1 2 3 4 5 6 (PRODUCT LEVEL)	SEE PAGE
	55	2,4	**4J-0520**	3	SEAL-O-RING	
	56	4	**4J-0524**	2	SEAL-O-RING	
	57	2	**4J-0527**	1	SEAL-O-RING	
	58	2	**5K-5338**	1	CLIP	
	59	4	**5K-9090**	1	SEAL-O-RING	
	60	2	**5P-7470**	1	CLIP (SLOT)	
	61	2	**5P-7471**	1	CLIP (TAB)	
	62	2	**5P-7703**	2	GROMMET	
	63	1	**5P-7854**	2	CLIP	
	64	2	**6D-4636**	1	CLIP	
C	65	1,2	**6V-1889**	10	CLIP	
	66	3	**6V-9746**	1	SEAL-O-RING	
	67	4	**7M-8485**	1	SEAL-O-RING	
	68	2	**7X-7729**	1	WASHER (11X25X3-MM THK)	
	69	2,4	**8C-3206**	4	FLANGE-HALF	
	70	1,3,4	**8D-9947**	3	CLIP	
C	71	1,2,3, 4	**8T-4121**	38	WASHER-HARD (11X21X2.5-MM THK)	
M	72	2	**8T-4133**	2	NUT (M10X1.5-THD)	
M	73	1,2,4	**8T-4136**	13	BOLT (M10X1.5X25-MM)	
CM	74	1,2	**8T-4137**	7	BOLT (M10X1.5X20-MM)	
CM	75	2,3,4	**8T-4139**	4	BOLT (M12X1.75X30-MM)	
M	76	4	**8T-4178**	2	BOLT (M10X1.5X90-MM)	
M	77	2	**8T-4182**	2	BOLT (M10X1.5X45-MM)	
M	78	2	**8T-4184**	4	BOLT (M12X1.75X45-MM)	
M	79	2	**8T-4196**	4	BOLT (M10X1.5X35-MM)	
C	80	2,3,4	**8T-4223**	12	WASHER-HARD (13.5X25.5X3-MM THK)	
CM	81	4	**8T-4648**	4	BOLT (M12X1.75X70-MM)	
CM	82	2,4	**8T-5005**	6	BOLT (M10X1.5X70-MM)	
	83	4	**9X-6580**	1	NUT (1-3/16-12-THD)	
	84	2	**294-0058**	1	PLATE	
M	85	2	**8T-4195**	3	BOLT (M10X1.5X30-MM)	
	86	2	**3E-8026**	1	CLIP (SLOT)	
	87	2	**3E-8027**	1	CLIP (TAB)	
	88	2	**144-4613**	1	ANGLE AS	
CM	89	2	**8T-4186**	1	BOLT (M10X1.5X40-MM)	
C	90	3	**155-4791**	1	BRACKET AS	
C	91	2	**101-9083**	1	BRACKET AS	
C	92	2	**7W-8106**	1	SPACER (11.13X19.05X15-MM THK)	

C-CHANGE FROM PREVIOUS TYPE
I-REFER TO HYDRAULIC INFORMATION SYSTEM
M-METRIC PART
Y-SEPARATE ILLUSTRATION

225-6716 LINES GP-HYDRAULIC FAN *(contd.)* i03782590

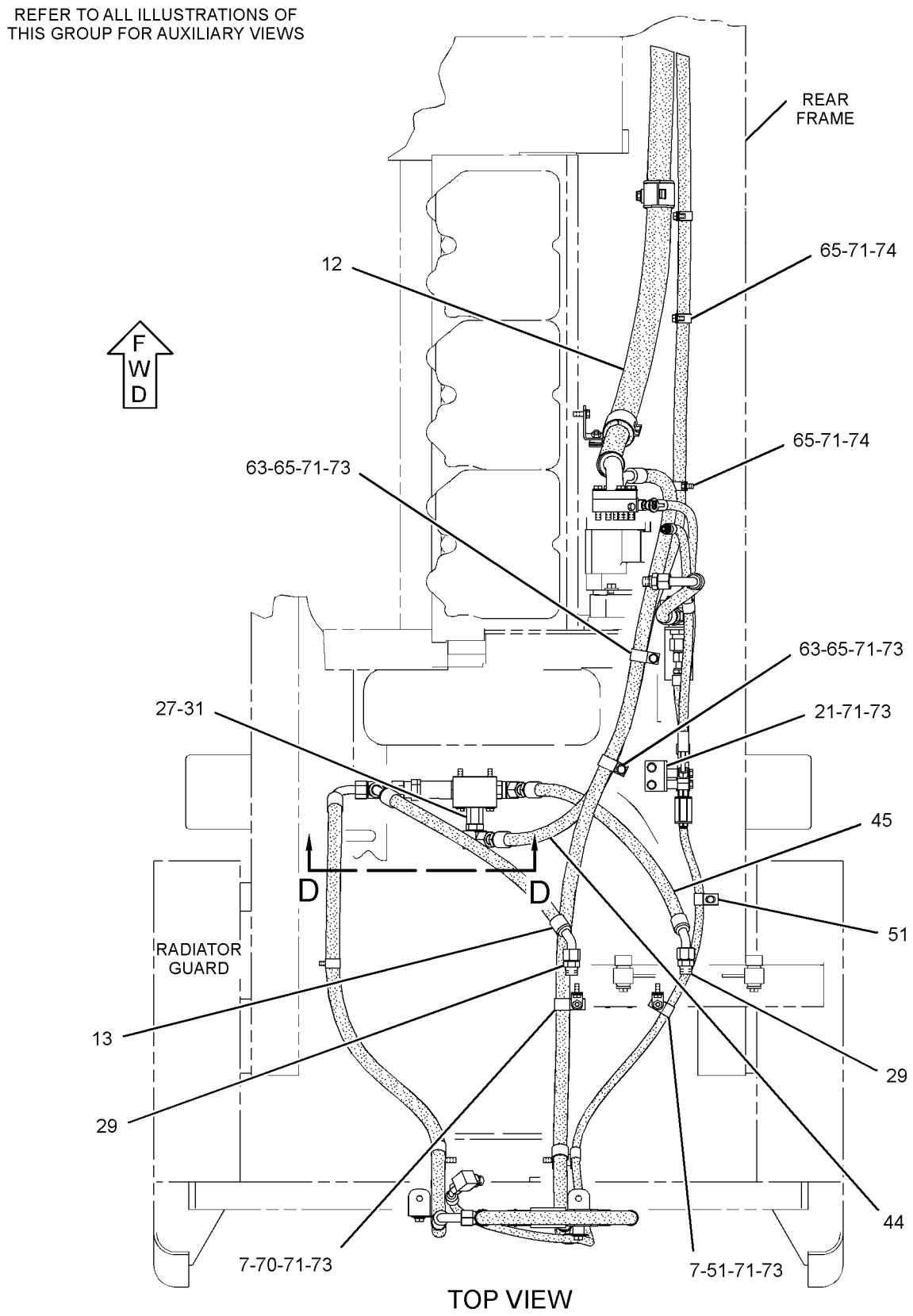

GRAPHIC #1 g02047774

225-6716 **LINES GP-HYDRAULIC FAN** *(contd.)* **i03782590**

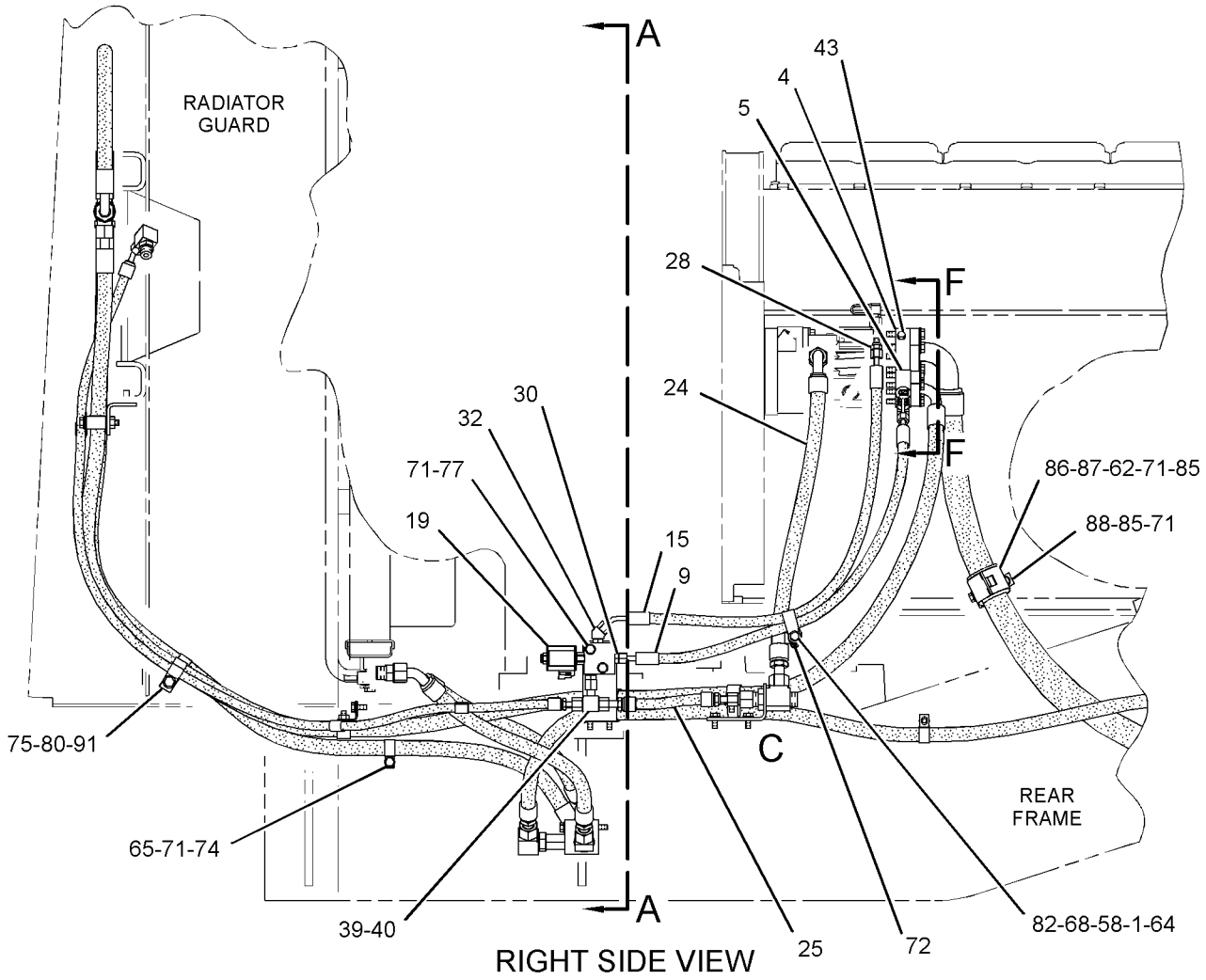

RIGHT SIDE VIEW

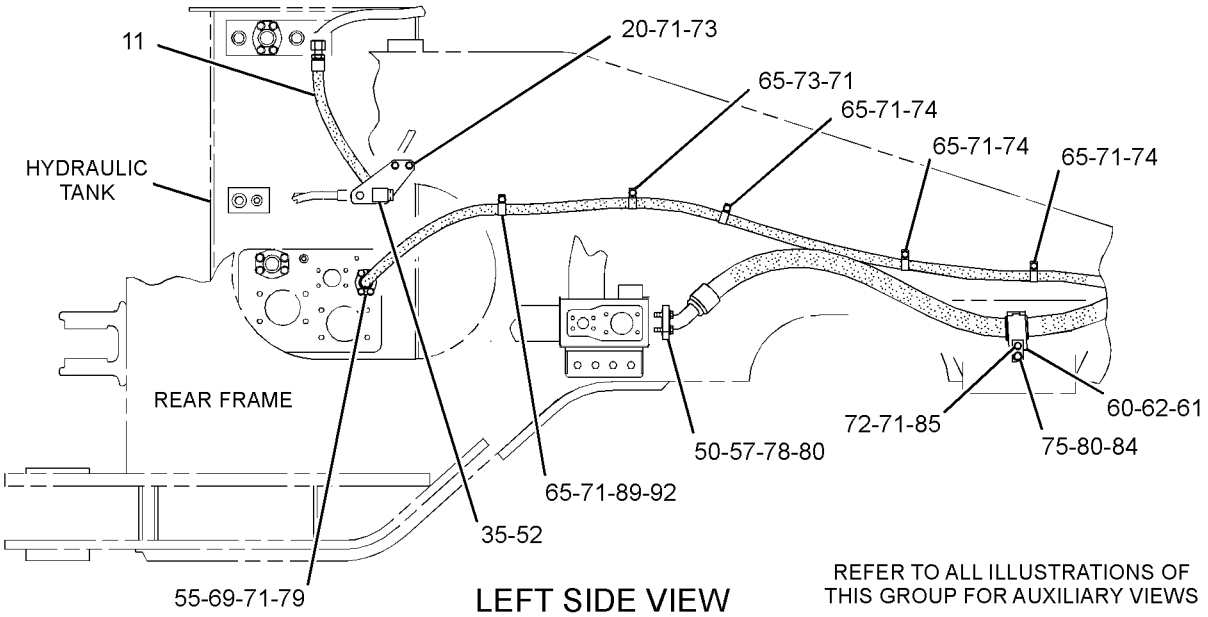

LEFT SIDE VIEW

REFER TO ALL ILLUSTRATIONS OF THIS GROUP FOR AUXILIARY VIEWS

GRAPHIC #2 g02047798

225-6716 LINES GP-HYDRAULIC FAN *(contd.)* i03782590

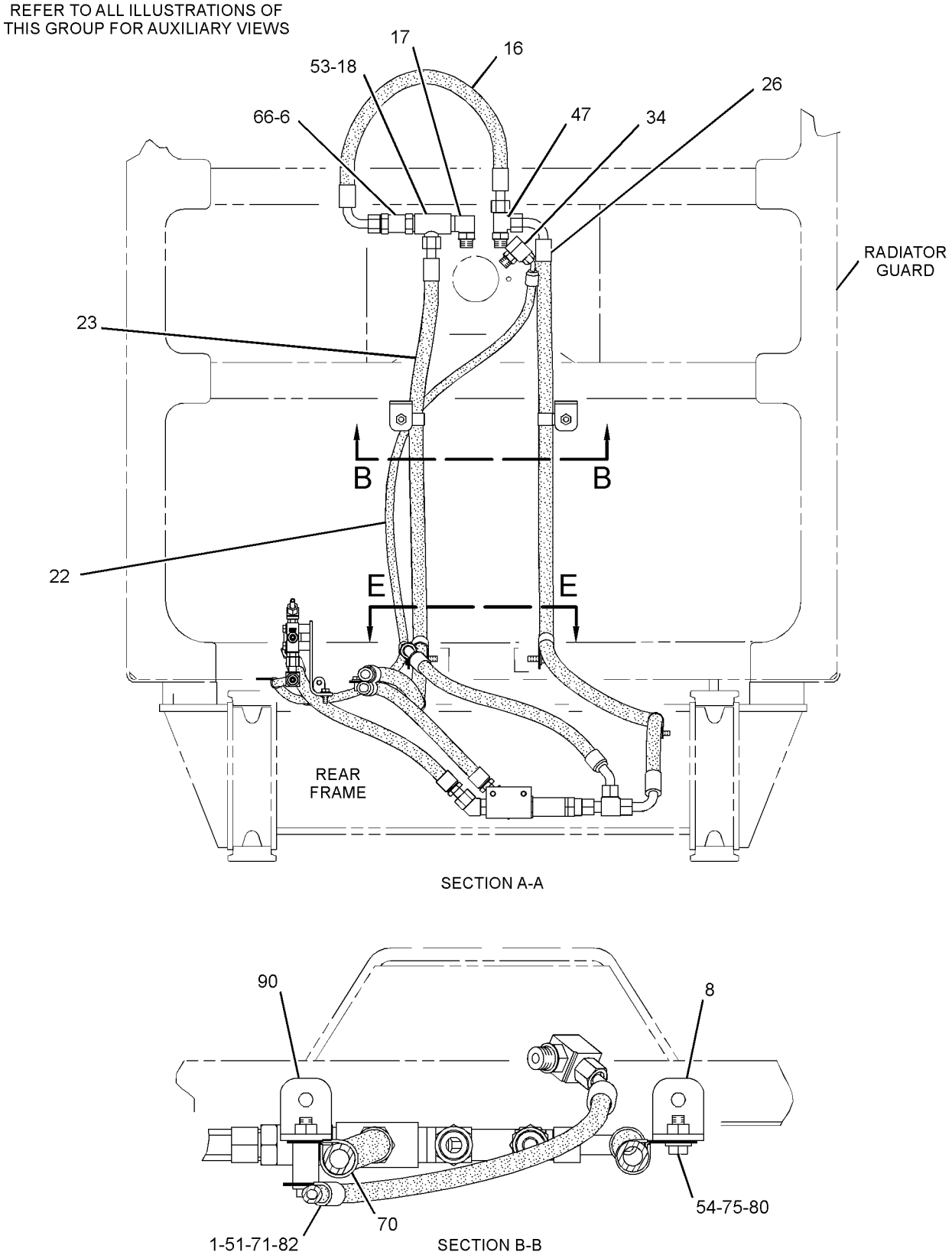

GRAPHIC #3 g02047813

225-6716 **LINES GP-HYDRAULIC FAN** *(contd.)* **i03782590**

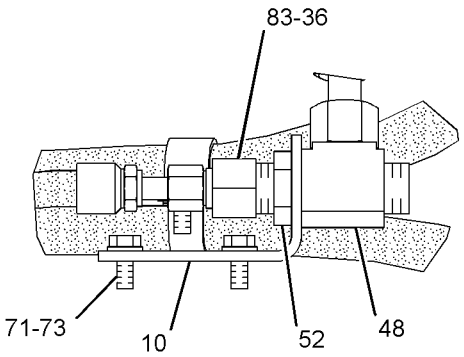

VIEW OF AREA C

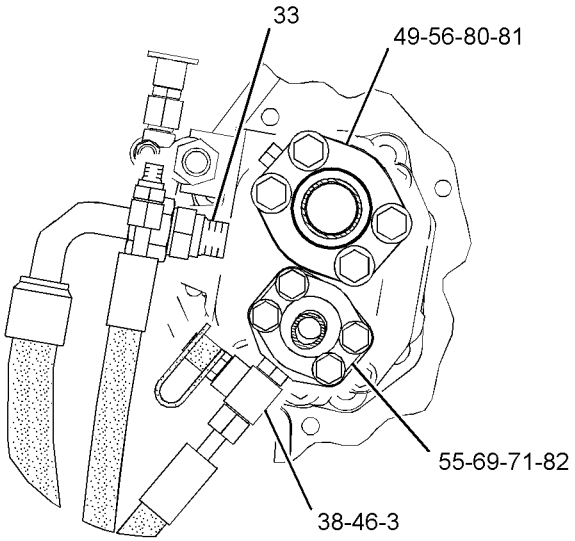

SECTION F-F

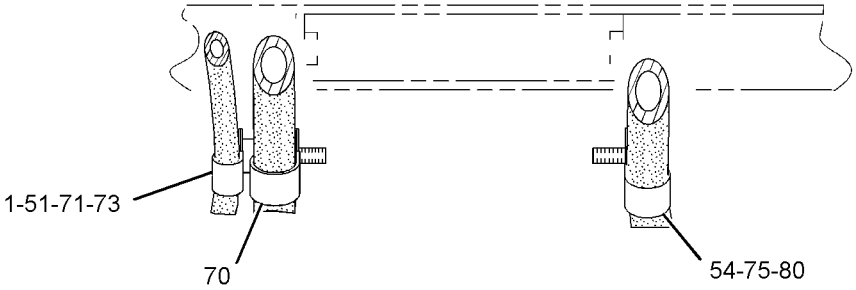

SECTION E-E

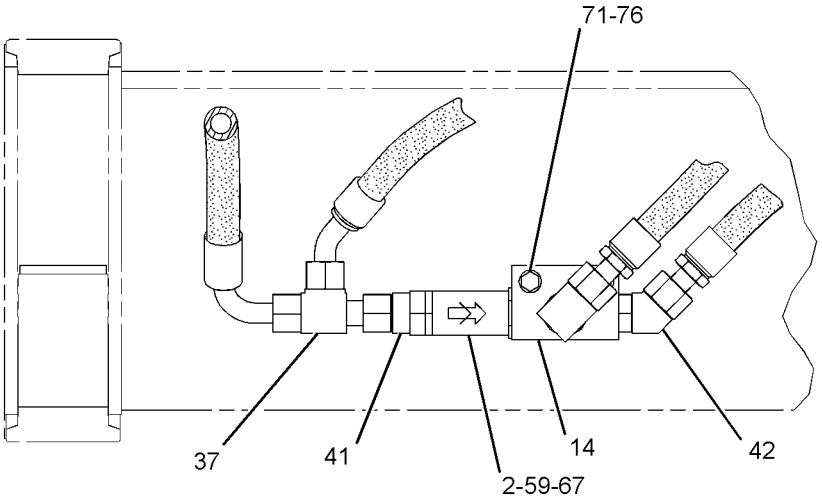

SECTION D-D

GRAPHIC #4 **<END>** g02047874

HYDRAULIC SYSTEM

132-6136 LINES GP-LIFT CYLINDER

S/N: BXY1-3999

PART OF 225-5449, 298-2038 HYDRAULIC AR

SMCS-5057, 5102 **i02261207**

NOTE	REF NO	GRAPHIC REF	PART NUMBER	QTY	PART NAME 1 2 3 4 5 6 (PRODUCT LEVEL)	SEE PAGE
Y	1	1	**173-8612**	1	CYLINDER GP-LIFT (RH)	1422
Y	2	1	**173-8613**	1	CYLINDER GP-LIFT (LH)	1423
I	3	1	**153-8474**	2	HOSE AS	
I	4	1	**153-8475**	2	HOSE AS	
I	5	1	**153-8476**	2	HOSE AS	
	6	1	**153-8477**	2	TUBE AS	
	7	1	**153-8478**	1	TUBE AS	
	8	1	**153-8479**	1	TUBE AS	
	9	1	**153-8480**	1	TUBE AS	
	10	1	**153-8481**	1	TUBE AS	
	11	1	**153-8482**	2	MANIFOLD	
	12	1	**153-8483**	2	PLATE AS	
	13	1	**153-8484**	2	BRACKET AS	
					(EACH INCLUDES)	
		1	**8X-4719**	2	BAR	
	14	1	**1P-3704**	12	SEAL-RECTANGULAR	
	15	1	**1P-3705**	6	SEAL-RECTANGULAR	
	16	1	**1P-3706**	6	SEAL-RECTANGULAR	
	17	1	**1P-5767**	24	FLANGE-HALF	
	19	1	**5P-0049**	2	COVER	
	20	1	**5P-8077**	4	FLANGE-HALF	
	21	1	**7Y-4038**	8	CLAMP-HALF	
M	22	1	**8T-4174**	8	BOLT (M16X2X120-MM)	
M	23	1	**8T-4183**	8	BOLT (M12X1.75X40-MM)	
M	25	1	**8T-4193**	8	BOLT (M16X2X50-MM)	
M	26	1	**8T-4194**	40	BOLT (M12X1.75X50-MM)	
	27	1	**8T-4223**	64	WASHER-HARD (13.5X25.5X3-MM THK)	
M	28	1	**8T-4648**	8	BOLT (M12X1.75X70-MM)	
M	29	1	**8T-4779**	4	BOLT (M16X2X35-MM)	
M	30	1	**8T-4910**	8	BOLT (M12X1.75X60-MM)	
M	31	1	**8T-4956**	8	BOLT (M12X1.75X35-MM)	
	32	1	**148-8407**	2	PLUG AS	
	33	1	**9X-8257**	20	WASHER (17.5X30X3.5-MM THK)	

I-REFER TO HYDRAULIC INFORMATION SYSTEM
M-METRIC PART
Y-SEPARATE ILLUSTRATION

132-6136 **LINES GP-LIFT CYLINDER** *(contd.)* **i02261207**

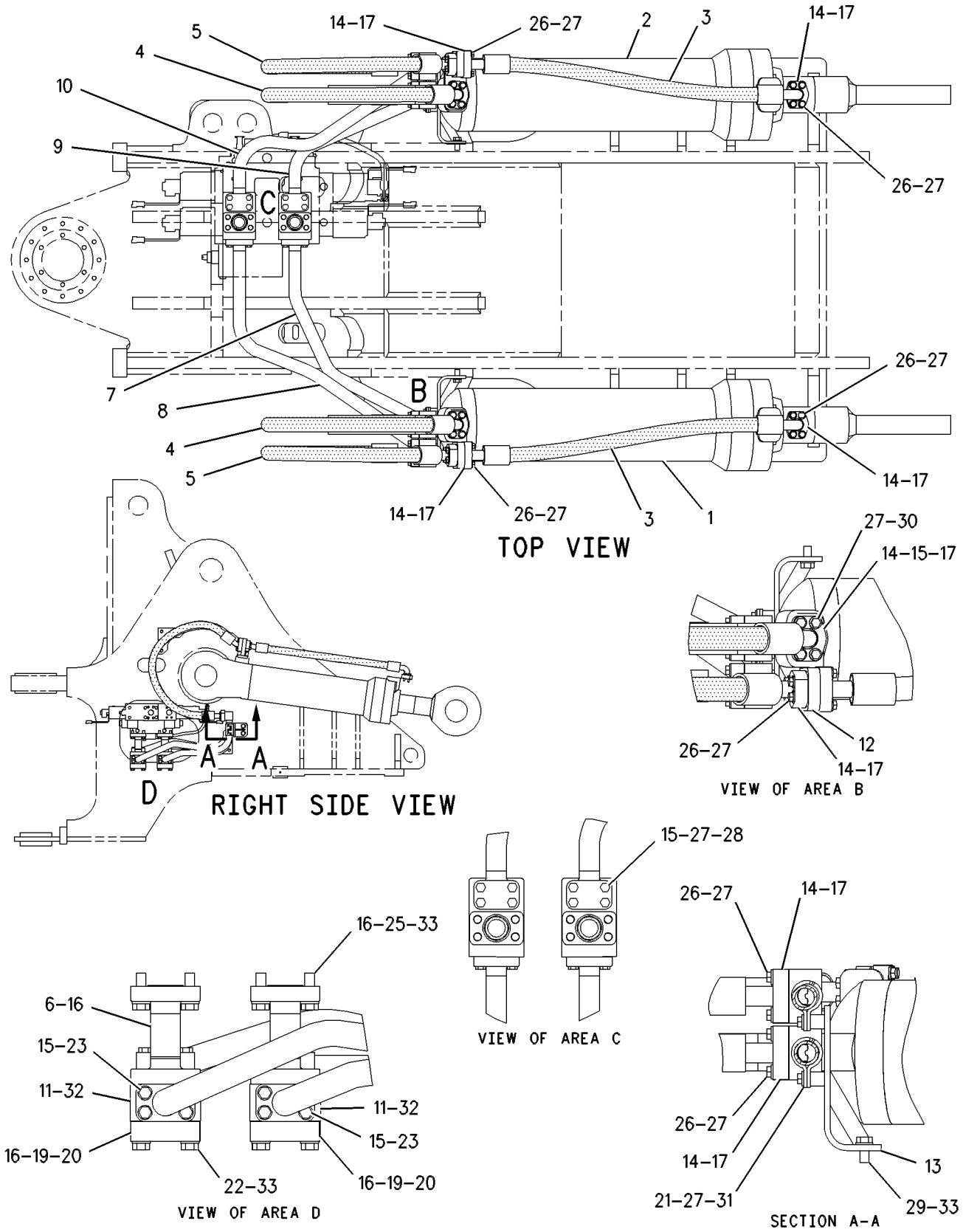

GRAPHIC #1 **<END>** g00614938

HYDRAULIC SYSTEM

189-7257 LINES GP-LIFT CYLINDER

S/N: BXY1900-UP

PART OF 227-3317 CONVERSION GP-HYDRAULIC LINES, 329-8109 INSULATION GP-HEAT AN ATTACHMENT

SMCS-5057, 5102 **i02887204**

NOTE	PART NUMBER	QTY	PART NAME 1 2 3 4 5 6 (PRODUCT LEVEL)	SEE PAGE
I	**189-7161**	2	HOSE AS	
I	**189-7162**	2	HOSE AS	
I	**189-7163**	2	HOSE AS	

I-REFER TO HYDRAULIC INFORMATION SYSTEM

<END>

HYDRAULIC SYSTEM

345-3931 LINES GP-LIFT CYLINDER

S/N: BXY4000-UP

PART OF 345-3930 HYDRAULIC AR

SMCS-5057, 5102 **i03750952**

NOTE	REF NO	GRAPHIC REF	PART NUMBER	QTY	PART NAME 1 2 3 4 5 6 (PRODUCT LEVEL)	SEE PAGE
	1	1	**153-8477**	2	TUBE AS	
	2	1	**153-8478**	1	TUBE AS	
	3	1	**153-8480**	1	TUBE AS	
	4	1	**153-8481**	1	TUBE AS	
	5	1	**153-8482**	2	MANIFOLD	
	6	1	**153-8484**	2	BRACKET AS	
					(EACH INCLUDES)	
		1	**8X-4719**	2	BAR	
	7	1	**315-8809**	1	BRACKET	
	8	1	**315-8814**	1	TUBE AS	
	9	1	**315-8874**	1	TUBE AS	
I	10	1	**315-8999**	2	HOSE AS	
I	11	1	**315-9142**	2	HOSE AS	
	12	1	**315-9291**	1	BRACKET	
	13	1	**345-3967**	1	TUBE AS	
	14	1	*148-8407*	2	PLUG AS	
					(EACH INCLUDES)	
		1	**3J-1907**	1	SEAL-O-RING	
		1	**9S-4191**	1	PLUG-O-RING	
	15	1	**1P-3704**	8	SEAL-RECTANGULAR	
	16	1	**1P-3705**	8	SEAL-RECTANGULAR	
	17	1	**1P-3706**	6	SEAL-RECTANGULAR	
	18	1	**1P-5767**	16	FLANGE-HALF	
	19	1	**5P-0049**	2	COVER	
	20	1	**5P-8077**	4	FLANGE-HALF	
	21	1	**7Y-4038**	12	CLAMP-HALF	
M	22	1	**8T-4174**	8	BOLT (M16X2X120-MM)	
M	23	1	**8T-4183**	8	BOLT (M12X1.75X40-MM)	
M	24	1	**8T-4193**	8	BOLT (M16X2X50-MM)	
M	25	1	**8T-4194**	24	BOLT (M12X1.75X50-MM)	
	26	1	**8T-4223**	60	WASHER-HARD (13.5X25.5X3-MM THK)	
M	27	1	**8T-4648**	16	BOLT (M12X1.75X70-MM)	
M	28	1	**8T-4779**	4	BOLT (M16X2X35-MM)	
M	29	1	**8T-4910**	8	BOLT (M12X1.75X60-MM)	
M	30	1	**8T-4956**	12	BOLT (M12X1.75X35-MM)	
	31	1	**9X-8257**	20	WASHER (17.5X30X3.5-MM THK)	

I-REFER TO HYDRAULIC INFORMATION SYSTEM
M-METRIC PART

345-3931 LINES GP-LIFT CYLINDER *(contd.)* i03750952

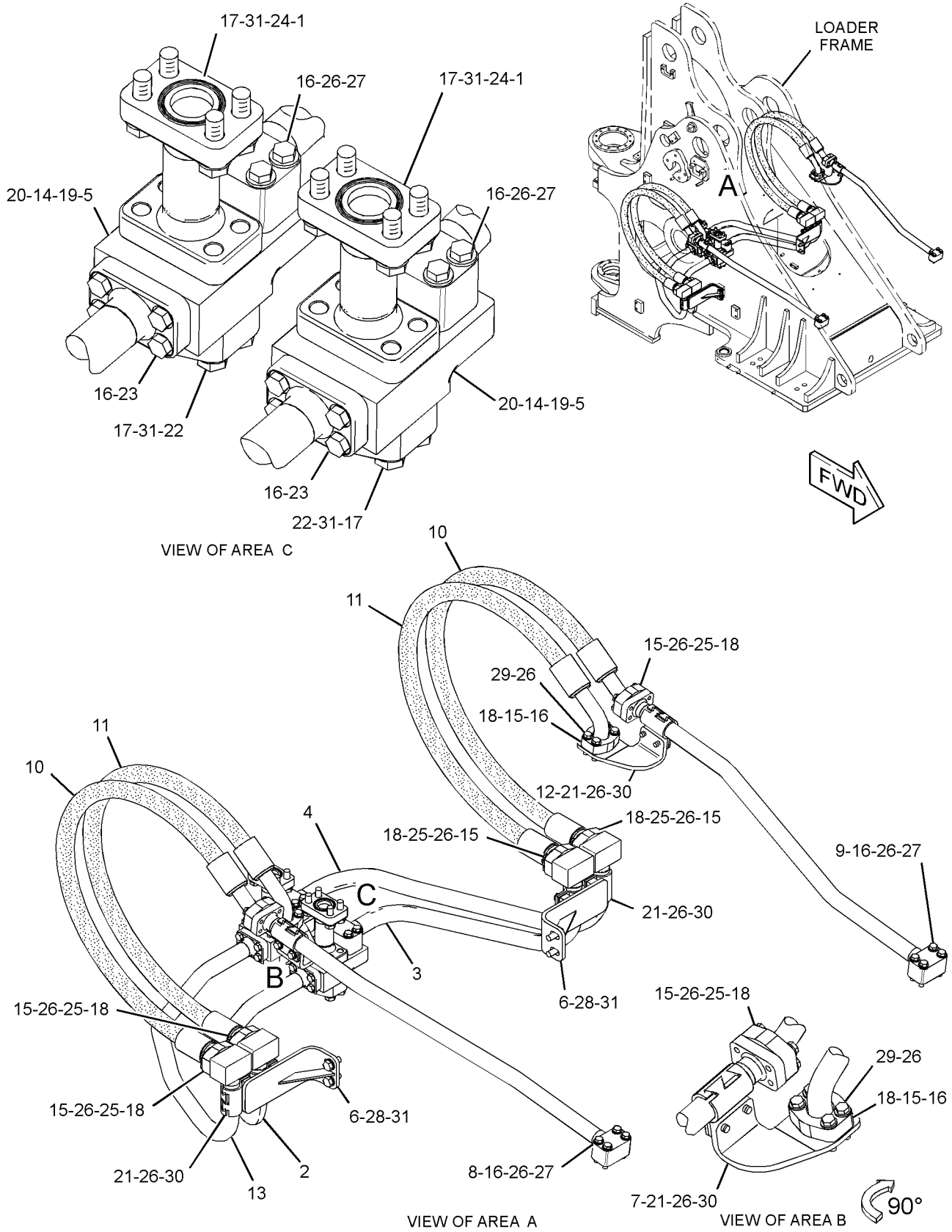

GRAPHIC #1 **<END>** g02042603

HYDRAULIC SYSTEM

251-3113 LINES GP-PILOT

S/N: BXY1-UP

PART OF 275-7838, 275-7840, 290-5780 HYDRAULIC AR-TILT REGENERATION

SMCS-5057, 5059 **i02578694**

NOTE	REF NO	GRAPHIC REF	PART NUMBER	QTY	PART NAME 1 2 3 4 5 6 (PRODUCT LEVEL)	SEE PAGE
	1	1	**7K-1181**	2	STRAP-CABLE	
I	2	1	**271-4585**	1	HOSE AS	
I	3	1	**271-4586**	1	HOSE AS	
	4	1	*148-8336*	1	CONNECTOR AS	
		1	**3J-1907**	1	SEAL-O-RING	
		1	**6V-8397**	1	SEAL-O-RING	
		1	**6V-8636**	1	CONNECTOR	
	5	1	*148-8435*	2	TEE AS	
					(EACH INCLUDES)	
		1	**3J-1907**	1	SEAL-O-RING	
		1	**6V-8397**	2	SEAL-O-RING	
		1	**6V-8781**	1	TEE-FACE SEAL	
	6	1	**3G-8054**	2	CLIP (TAB)	
	7	1	**3G-8057**	2	CLIP (SLOT)	
	8	1	**5K-5338**	2	CLIP	
	9	1	**6V-0974**	2	GROMMET	
	10	1	**6V-1572**	2	CLIP (SLOT)	
	11	1	**6V-1573**	2	CLIP (TAB)	
	12	1	**6V-1574**	2	GROMMET	
	13	1	**8T-4121**	6	WASHER-HARD (11X21X2.5-MM THK)	
M	14	1	**8T-4133**	2	NUT (M10X1.5-THD)	
M	15	1	**8T-4136**	2	BOLT (M10X1.5X25-MM)	
M	16	1	**8T-4186**	2	BOLT (M10X1.5X40-MM)	
	17	1	*148-8378*	1	ELBOW AS	
		1	**3J-1907**	1	SEAL-O-RING	
		1	**6V-8397**	1	SEAL-O-RING	
		1	**6V-8724**	1	ELBOW	

I-REFER TO HYDRAULIC INFORMATION SYSTEM
M-METRIC PART

251-3113 **LINES GP-PILOT** *(contd.)* **i02578694**

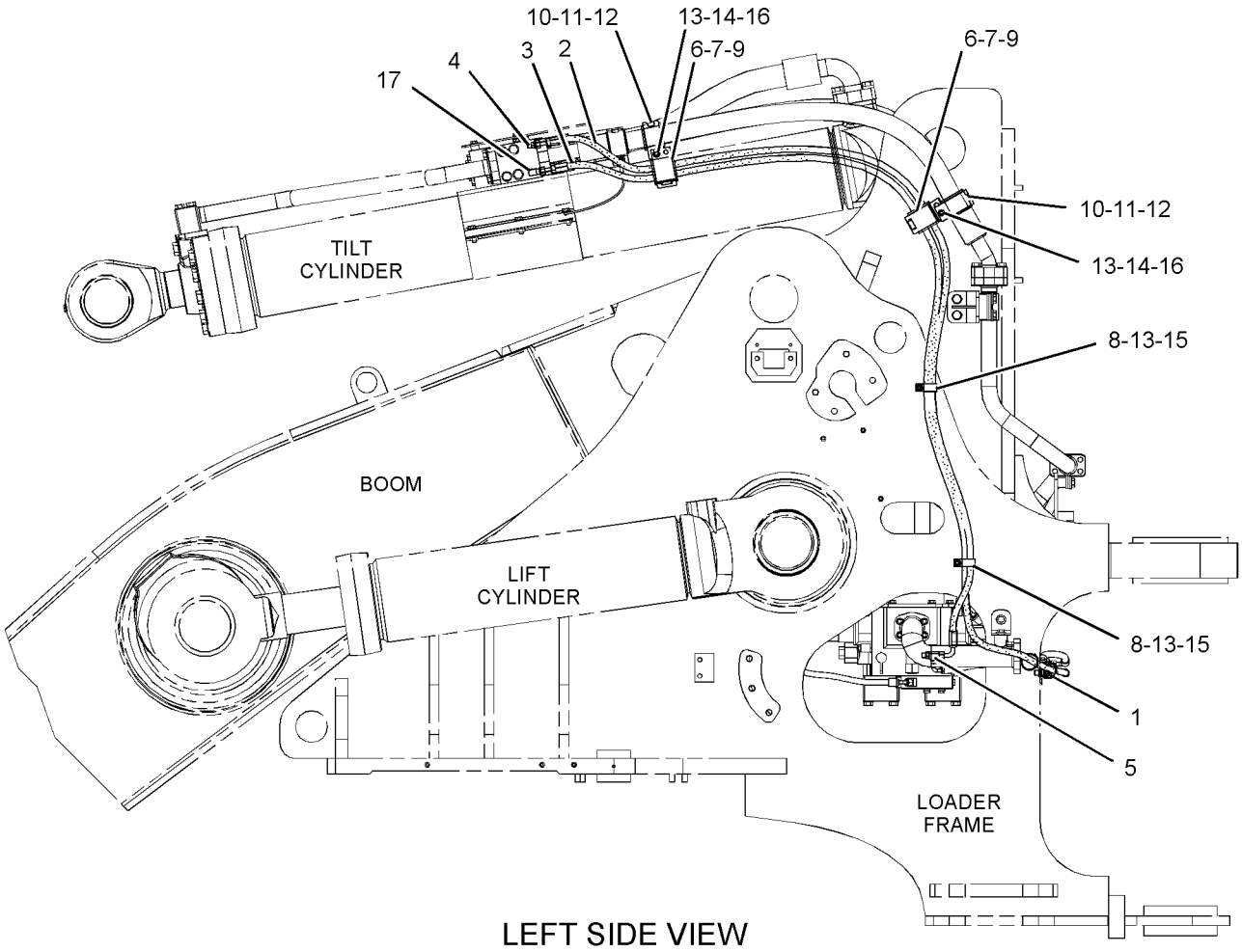

LEFT SIDE VIEW

GRAPHIC #1 **<END>** g01296836

HYDRAULIC SYSTEM

297-6924 LINES GP-PILOT

S/N: BXY2733-2915

PART OF 298-2038 HYDRAULIC AR

SMCS-5057, 5059 **i03357300**

NOTE	REF NO	GRAPHIC REF	PART NUMBER	QTY	PART NAME 1 2 3 4 5 6 (PRODUCT LEVEL)	SEE PAGE
I	1	1	**112-0845**	1	HOSE AS	
I	2	1	**176-7190**	1	HOSE AS	
	3	1	**297-6919**	1	TUBE AS	
	4	1	**297-6920**	1	TUBE AS	
	5	1	**297-6921**	1	TUBE AS	
	6	1	**297-6922**	1	TUBE AS	
	7	1	*148-8336*	2	CONNECTOR AS	
		1	**3J-1907**	1	SEAL-O-RING	
		1	**6V-8397**	1	SEAL-O-RING	
		1	**6V-8636**	1	CONNECTOR	
	8	1	*148-8434*	1	TEE AS	
		1	**6V-8397**	2	SEAL-O-RING	
		1	**6V-9843**	1	TEE-SWIVEL	
	9	1	*148-8439*	1	TEE AS	
		1	**3J-1907**	1	SEAL-O-RING	
		1	**6V-8397**	2	SEAL-O-RING	
		1	**6V-8774**	1	TEE	
	10	1	**5P-7462**	2	CLIP (SLOT)	
	11	1	**5P-7463**	2	CLIP (TAB)	
	12	1	**5P-9297**	6	CLIP	
	13	1	**6V-0683**	2	GROMMET	
	14	1	**6V-8397**	4	SEAL-O-RING	
	15	1	**8T-4121**	5	WASHER-HARD (11X21X2.5-MM THK)	
M	16	1	**8T-4136**	3	BOLT (M10X1.5X25-MM)	
M	17	1	**8T-4195**	2	BOLT (M10X1.5X30-MM)	

I-REFER TO HYDRAULIC INFORMATION SYSTEM
M-METRIC PART

297-6924 **LINES GP-PILOT** *(contd.)* **i03357300**

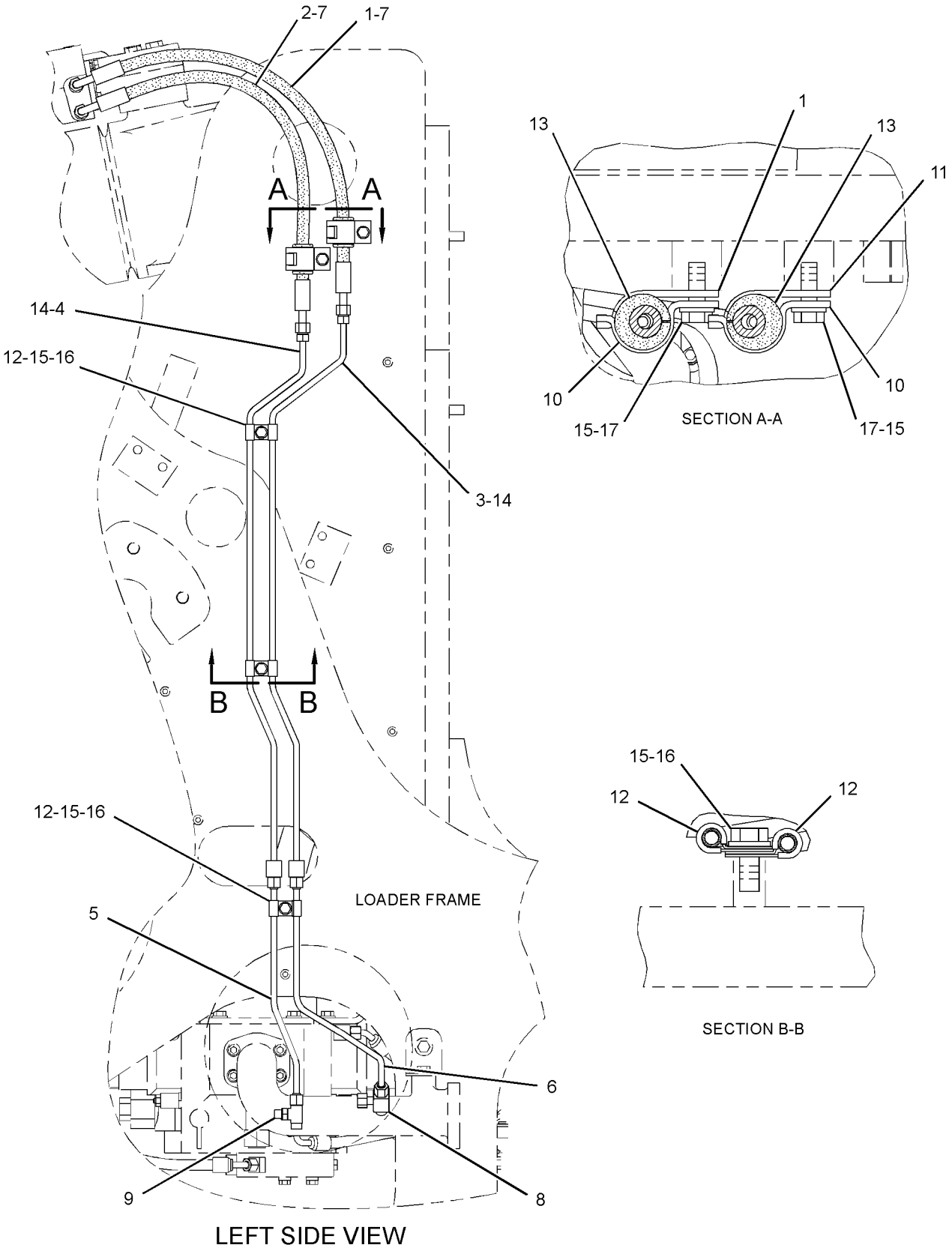

GRAPHIC #1 **<END>** g01741633

HYDRAULIC SYSTEM

297-6924 LINES GP-PILOT

S/N: BXY2916-3999

PART OF 298-2038 HYDRAULIC AR

SMCS-5057, 5059 **i03622000**

NOTE	REF NO	GRAPHIC REF	PART NUMBER	QTY	PART NAME 1 2 3 4 5 6 (PRODUCT LEVEL)	SEE PAGE
I	1	1	**112-0845**	1	HOSE AS	
I	2	1	**176-7190**	1	HOSE AS	
	3	1	**297-6919**	1	TUBE AS	
	4	1	**297-6920**	1	TUBE AS	
	5	1	**297-6921**	1	TUBE AS	
C	6	1	**342-5983**	1	TUBE AS	
	7	1	*148-8336*	2	CONNECTOR AS	
					(EACH INCLUDES)	
		1	**3J-1907**	1	SEAL-O-RING	
		1	**6V-8397**	1	SEAL-O-RING	
		1	**6V-8636**	1	CONNECTOR	
	9	1	*148-8439*	1	TEE AS	
		1	**3J-1907**	1	SEAL-O-RING	
		1	**6V-8397**	2	SEAL-O-RING	
		1	**6V-8774**	1	TEE	
	10	1	**5P-7462**	2	CLIP (SLOT)	
	11	1	**5P-7463**	2	CLIP (TAB)	
	12	1	**5P-9297**	6	CLIP	
	13	1	**6V-0683**	2	GROMMET	
	14	1	**6V-8397**	4	SEAL-O-RING	
	15	1	**8T-4121**	5	WASHER-HARD (11X21X2.5-MM THK)	
M	16	1	**8T-4136**	3	BOLT (M10X1.5X25-MM)	
M	17	1	**8T-4195**	2	BOLT (M10X1.5X30-MM)	

C-CHANGE FROM PREVIOUS TYPE
I-REFER TO HYDRAULIC INFORMATION SYSTEM
M-METRIC PART

297-6924 **LINES GP-PILOT** *(contd.)* **i03622000**

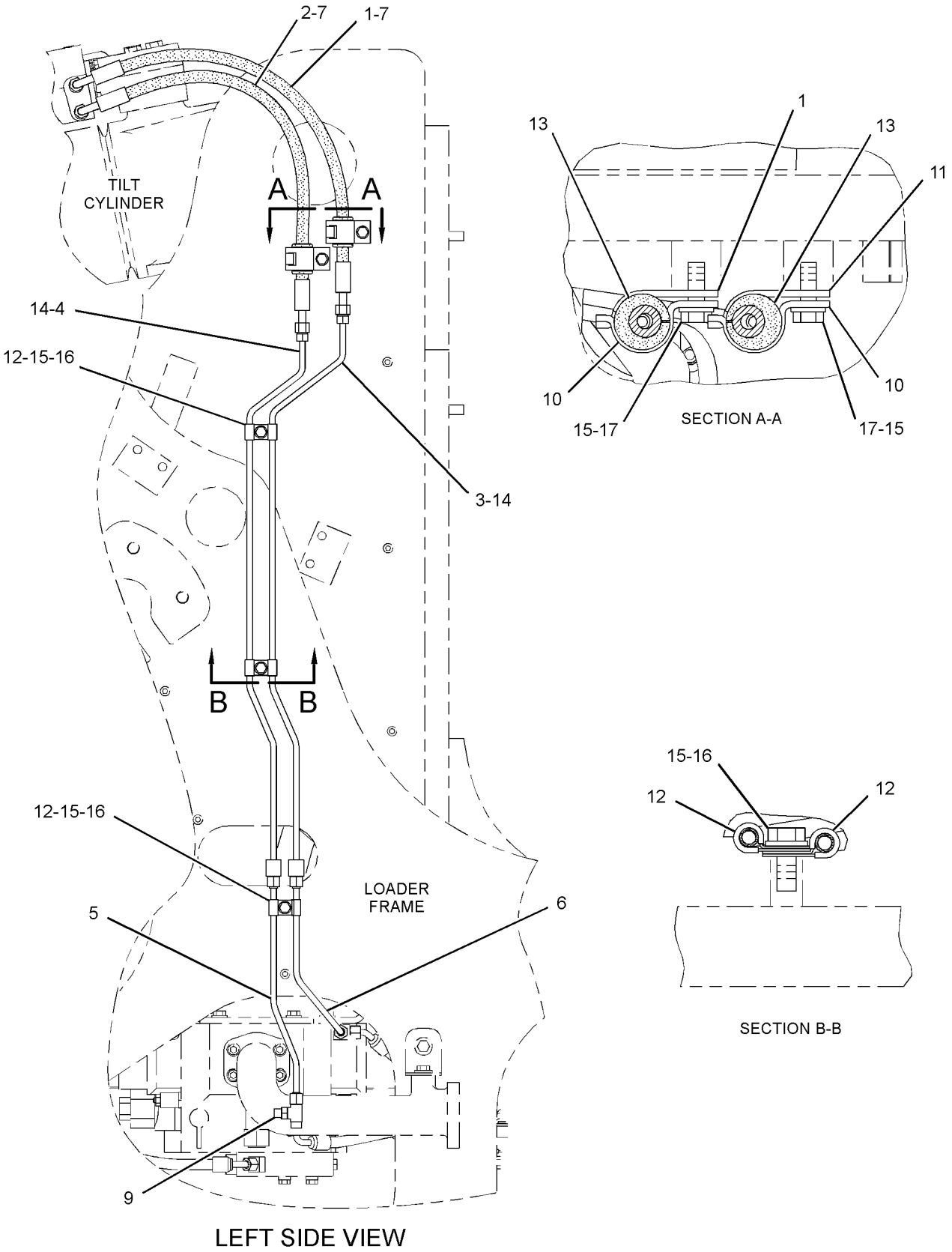

GRAPHIC #1 **<END>** g02054274

HYDRAULIC SYSTEM

315-8805 LINES GP-PILOT

S/N: BXY4000-UP

PART OF 345-3930 HYDRAULIC AR

SMCS-5057, 5059 **i03750951**

NOTE	REF NO	GRAPHIC REF	PART NUMBER	QTY	PART NAME 1 2 3 4 5 6 (PRODUCT LEVEL)	SEE PAGE
I	1	1	**112-0845**	1	HOSE AS	
I	2	1	**176-7190**	1	HOSE AS	
	3	1	**297-6919**	1	TUBE AS	
	4	1	**297-6920**	1	TUBE AS	
	5	1	**297-6921**	1	TUBE AS	
	6	1	**343-2263**	1	TUBE AS	
	7	1	*148-8336*	2	CONNECTOR AS	
					(EACH INCLUDES)	
		1	**3J-1907**	1	SEAL-O-RING	
		1	**6V-8397**	1	SEAL-O-RING	
		1	**6V-8636**	1	CONNECTOR	
	8	1	**5P-7462**	2	CLIP (SLOT)	
	9	1	**5P-7463**	2	CLIP (TAB)	
	10	1	**5P-9297**	6	CLIP	
	11	1	**6V-0683**	2	GROMMET	
	12	1	**6V-8397**	4	SEAL-O-RING	
	13	1	**8T-4121**	5	WASHER-HARD (11X21X2.5-MM THK)	
M	14	1	**8T-4136**	3	BOLT (M10X1.5X25-MM)	
M	15	1	**8T-4195**	2	BOLT (M10X1.5X30-MM)	

I-REFER TO HYDRAULIC INFORMATION SYSTEM
M-METRIC PART

315-8805 **LINES GP-PILOT** *(contd.)* **i03750951**

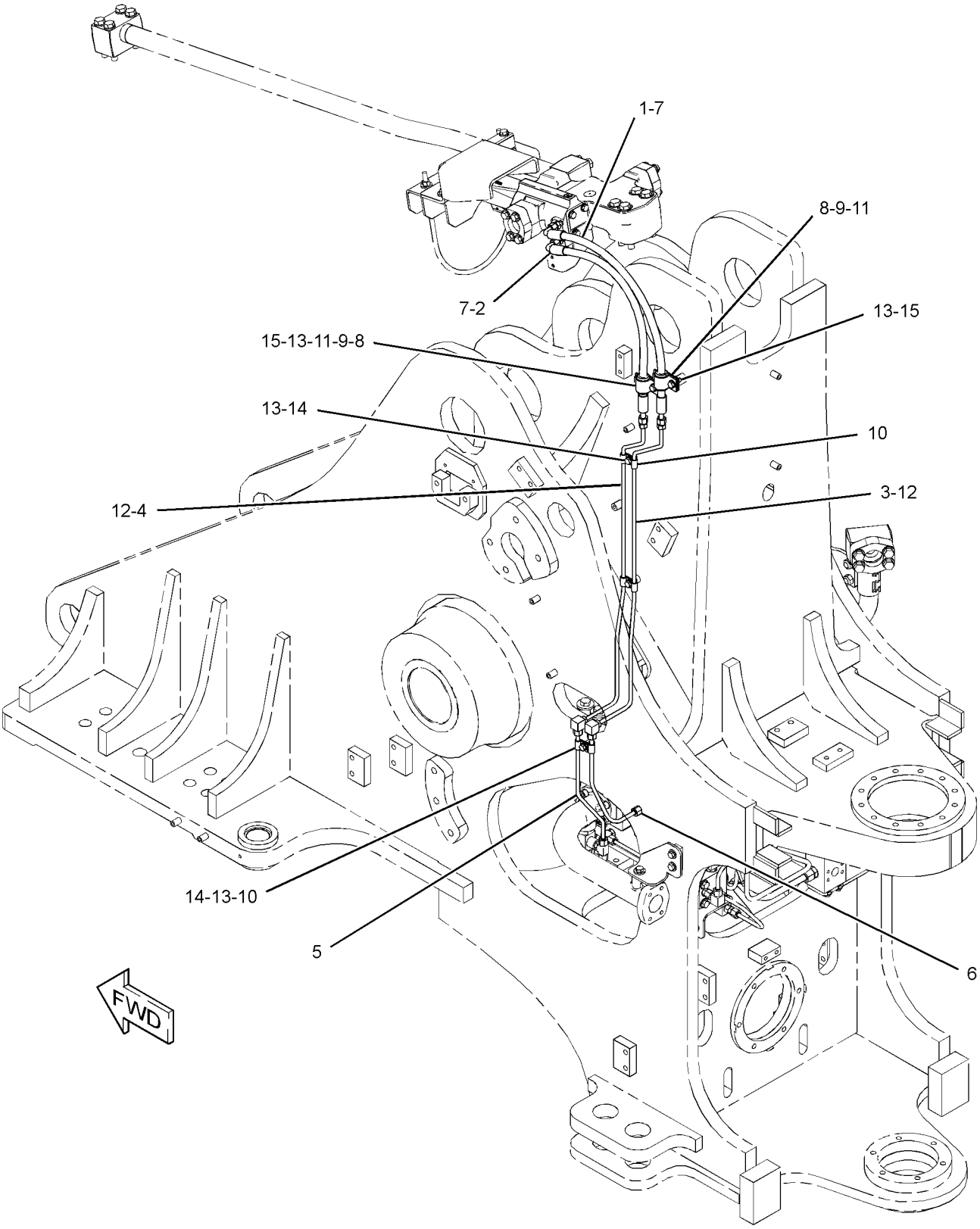

GRAPHIC #1 **<END>** g02032956

HYDRAULIC SYSTEM

156-5519 LINES GP-TILT CYLINDER—CYLINDER MOUNTED

S/N: BXY1-UP

PART OF 255-0042, 255-0043 LIFT AR

AN ATTACHMENT

SMCS-5057, 5104 **i02908858**

NOTE	REF NO	GRAPHIC REF	PART NUMBER	QTY	PART NAME 1 2 3 4 5 6 (PRODUCT LEVEL)	SEE PAGE
	1	1	**115-1392**	1	MANIFOLD	
	2	1	**156-4403**	1	U-BOLT	
	3	1	**165-2093**	1	BRACKET AS	
	4	1	**165-2096**	1	TUBE AS	
	5	1	**243-3720**	2	CLAMP	
CY	6	1	**231-1955**	1	CYLINDER GP-TILT (HIGH LIFT MACHINES)	1428
I	7	1	**304-7225**	1	HOSE AS	
	8	1	**304-7226**	2	BRACKET	
	9	1	**103-1303**	2	CLAMP-HALF	
	10	1	**1P-3705**	2	SEAL-RECTANGULAR	
	11	1	**1P-3706**	1	SEAL-RECTANGULAR	
	12	1	**3E-9411**	4	WASHER-HARD (17.5X38X6-MM THK)	
	13	1	**5P-1076**	2	WASHER-HARD (13.5X30X4-MM THK)	
	14	1	**5P-8077**	4	FLANGE-HALF	
	15	1	**6V-1574**	1	GROMMET	
M	16	1	**7X-2475**	4	BOLT (M16X2X130-MM)	
M	17	1	**7X-2543**	4	BOLT (M10X1.5X120-MM)	
M	18	1	**7X-2553**	4	BOLT (M16X2X40-MM)	
M	19	1	**7X-2556**	4	BOLT (M16X2X100-MM)	
	20	1	**7X-7729**	8	WASHER (11X25X3-MM THK)	
M	21	1	**8T-4133**	4	NUT (M10X1.5-THD)	
M	22	1	**8T-4140**	8	BOLT (M16X2X60-MM)	
M	23	1	**8T-4244**	2	NUT (M12X1.75-THD)	
	24	1	**9X-8257**	16	WASHER (17.5X30X3.5-MM THK)	
	25	1	**1P-3707**	1	SEAL-RECTANGULAR	

C-CHANGE FROM PREVIOUS TYPE
I-REFER TO HYDRAULIC INFORMATION SYSTEM
M-METRIC PART
Y-SEPARATE ILLUSTRATION

156-5519 **LINES GP-TILT CYLINDER** *(contd.)* **i02908858**

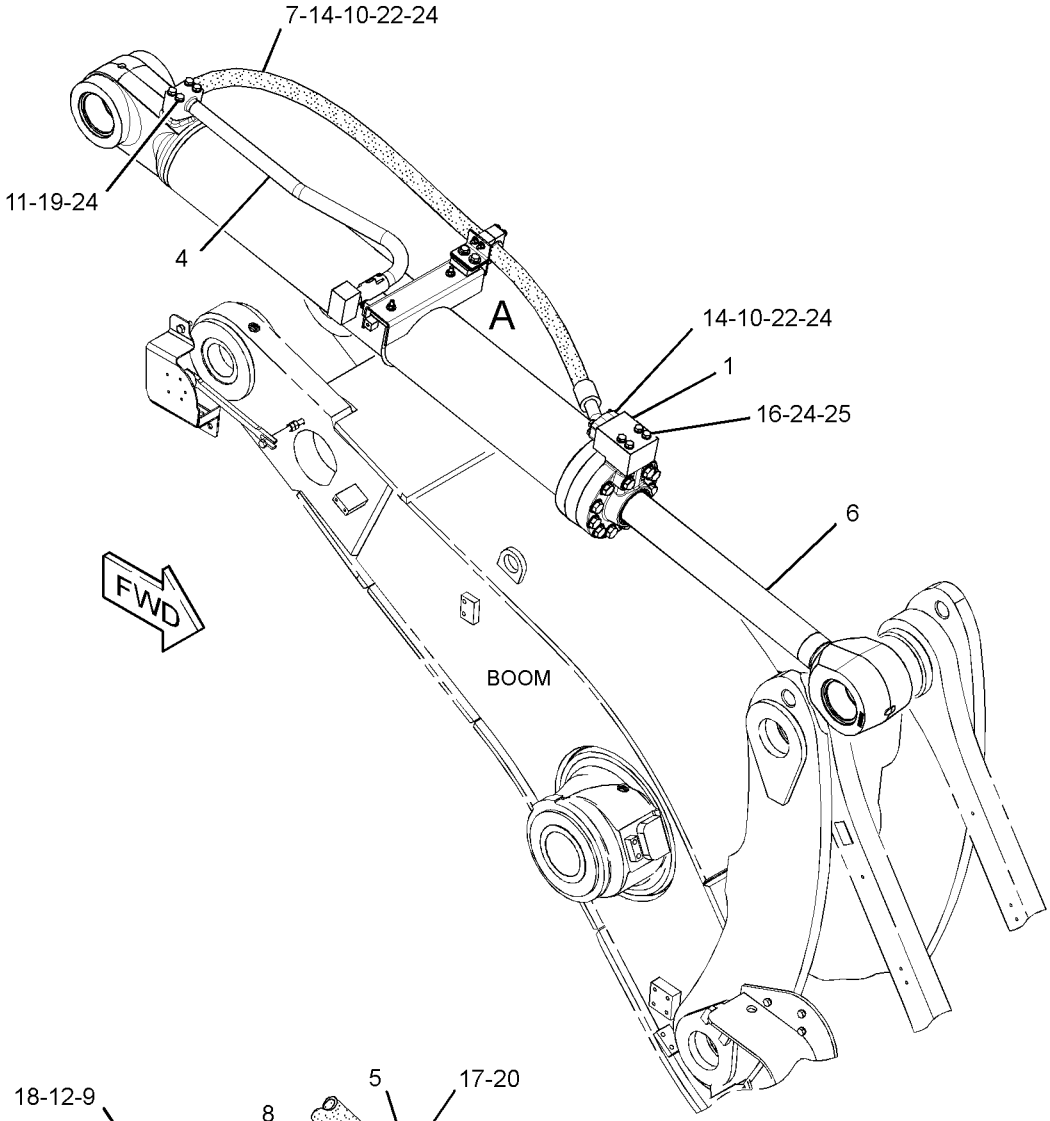

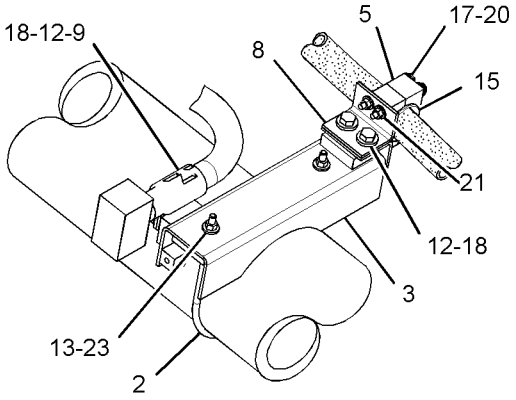

VIEW OF AREA A

GRAPHIC #1 **<END>** g01458333

HYDRAULIC SYSTEM

189-7254 LINES GP-TILT CYLINDER

S/N: BXY1900-UP

PART OF 227-3317 CONVERSION GP-HYDRAULIC LINES

AN ATTACHMENT

SMCS-5057, 5104 **i02882638**

NOTE	REF NO	GRAPHIC REF	PART NUMBER	QTY	PART NAME 1 2 3 4 5 6 (PRODUCT LEVEL)	SEE PAGE
I	1	1	**217-5911**	1	HOSE AS (RH, LH)	
	2	1	**193-2120**	1	GROMMET	
	3	1	**6V-1868**	1	CLIP (TAB)	
	4	1	**6V-1867**	1	CLIP (SLOT)	

I-REFER TO HYDRAULIC INFORMATION SYSTEM

189-7254 **LINES GP-TILT CYLINDER** *(contd.)* **i02882638**

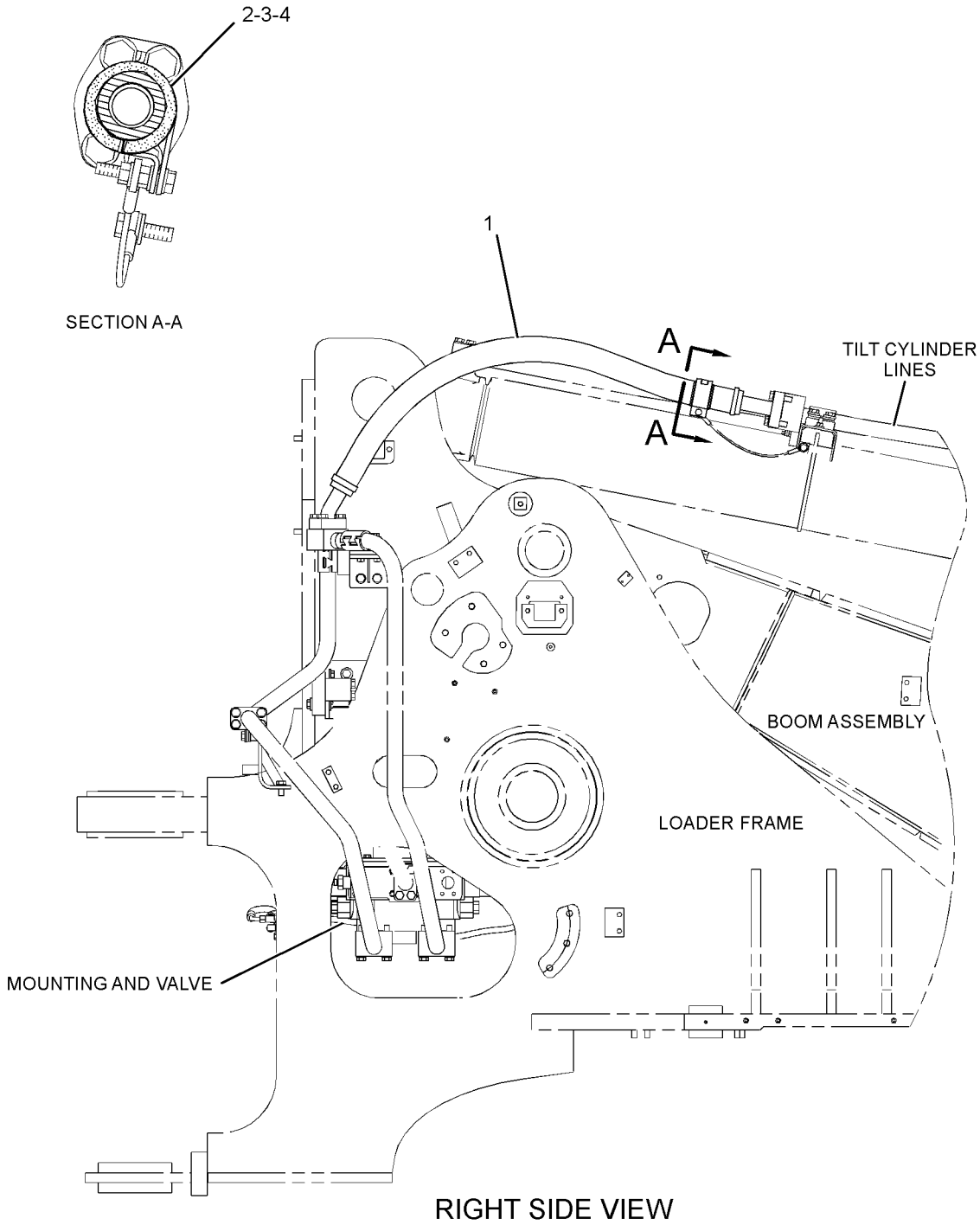

GRAPHIC #1 **<END>** g01199953

HYDRAULIC SYSTEM

246-2322 LINES GP-TILT CYLINDER

S/N: BXY1-UP

PART OF 255-0040, 255-0042 LIFT AR

AN ATTACHMENT

SMCS-5057, 5104 **i03166804**

NOTE	REF NO	GRAPHIC REF	PART NUMBER	QTY	PART NAME 1 2 3 4 5 6 (PRODUCT LEVEL)	SEE PAGE
	1	1	**156-2842**	1	BRACKET AS	
	2	1	**165-2357**	1	BRACKET AS	
M		1	**8T-3597**	2	NUT-WELD (M12X1.75-THD)	
	3	1	**165-2358**	1	BRACKET AS	
	4	1	**165-3825**	1	BRACKET AS	
	5	1	**165-3827**	1	TUBE AS	
	6	1	**179-2229**	1	CABLE AS	
	7	1	**214-9523**	1	TUBE AS	
	8	1	**321-0617**	1	TUBE AS	
I	9	1	**304-7223**	1	HOSE AS	
	10	1	**103-1303**	6	CLAMP-HALF	
M	11	1	**180-4686**	1	BOLT (M10X1.5X60-MM)	
	12	1	**1P-3705**	2	SEAL-RECTANGULAR	
	13	1	**1P-3706**	3	SEAL-RECTANGULAR	
	14	1	**3E-9411**	6	WASHER-HARD (17.5X38X6-MM THK)	
	15	1	**5P-1076**	2	WASHER-HARD (13.5X30X4-MM THK)	
	16	1	**5P-8077**	4	FLANGE-HALF	
	17	1	**6V-1572**	1	CLIP (SLOT)	
	18	1	**6V-1573**	1	CLIP (TAB)	
	19	1	**6V-1574**	1	GROMMET	
M	20	1	**7X-2553**	6	BOLT (M16X2X40-MM)	
M	21	1	**7X-2556**	8	BOLT (M16X2X100-MM)	
	22	1	**8T-4121**	4	WASHER-HARD (11X21X2.5-MM THK)	
	23	1	**8T-4122**	8	WASHER-HARD (17X32X3.5-MM THK)	
M	24	1	**8T-4133**	2	NUT (M10X1.5-THD)	
M	25	1	**8T-4140**	12	BOLT (M16X2X60-MM)	
M	26	1	**8T-4183**	3	BOLT (M12X1.75X40-MM)	
	27	1	**8T-4223**	3	WASHER-HARD (13.5X25.5X3-MM THK)	
M	28	1	**8T-4779**	6	BOLT (M16X2X35-MM)	
	29	1	**9X-8257**	18	WASHER (17.5X30X3.5-MM THK)	

I-REFER TO HYDRAULIC INFORMATION SYSTEM
M-METRIC PART

246-2322 **LINES GP-TILT CYLINDER** *(contd.)* **i03166804**

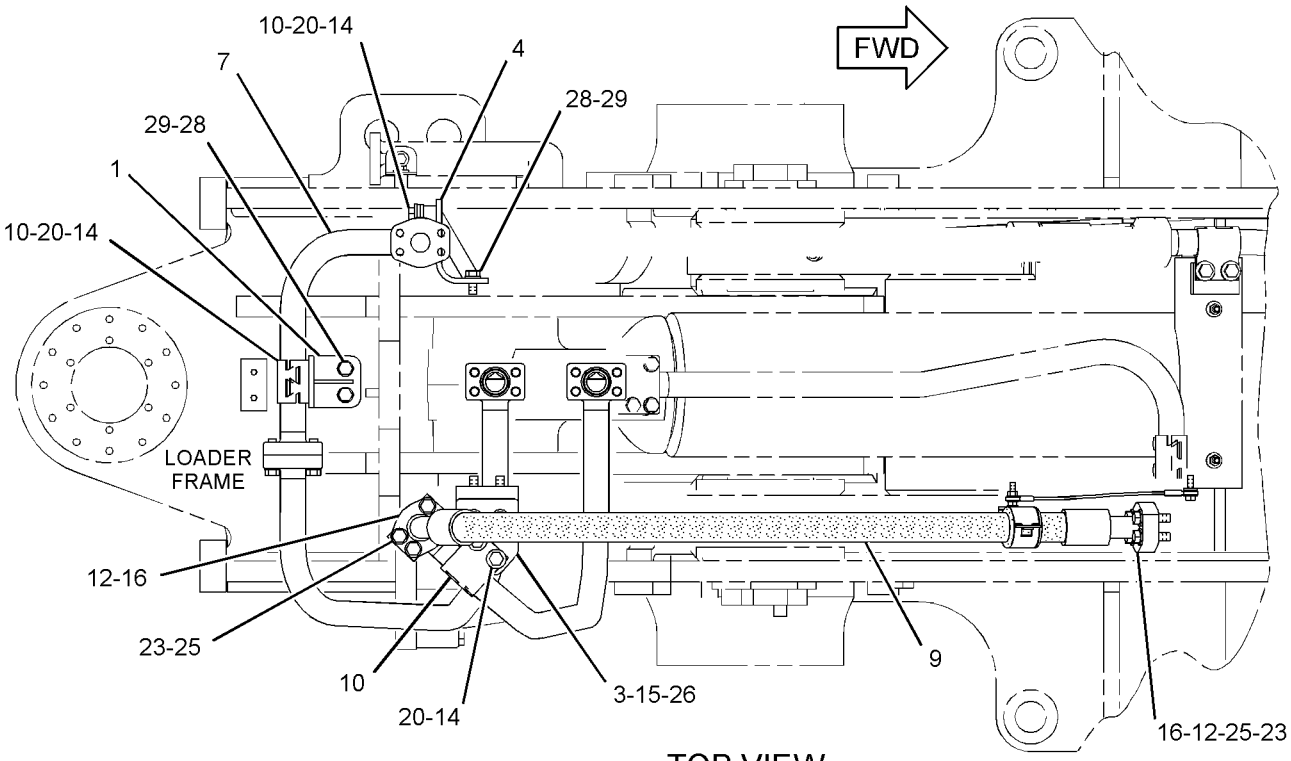

TOP VIEW

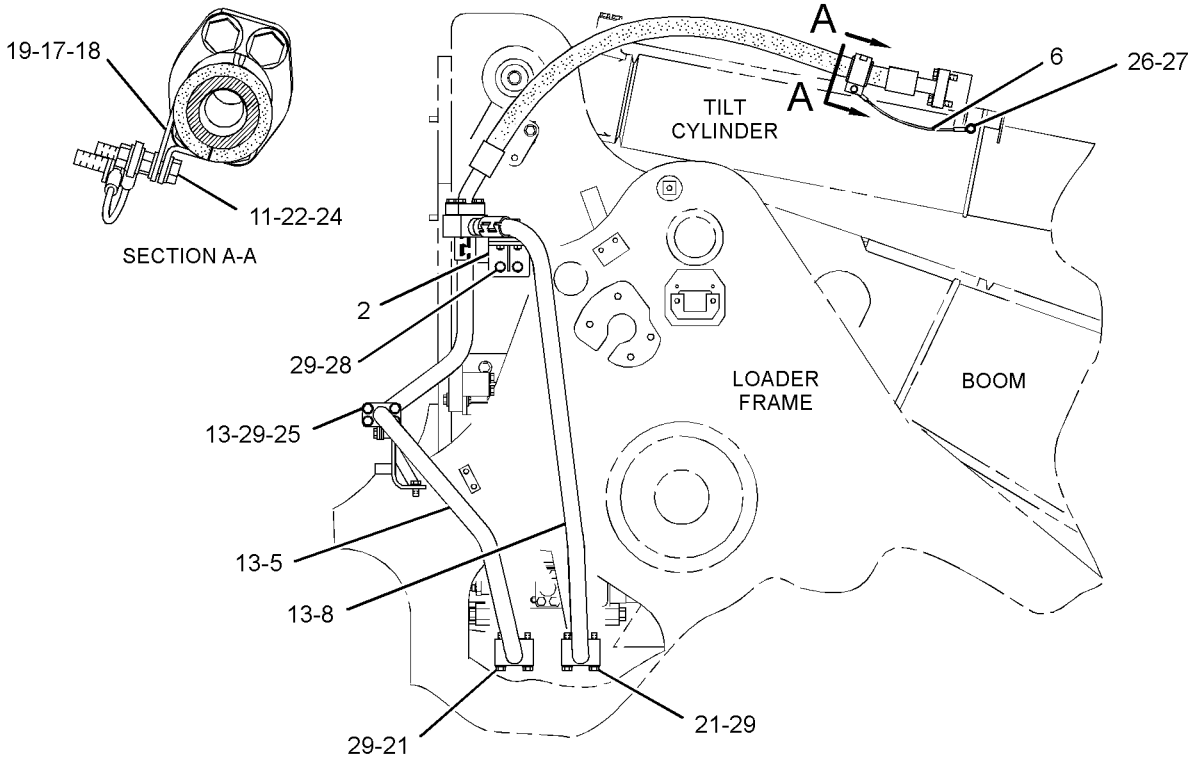

RIGHT SIDE VIEW

GRAPHIC #1 **<END>** g01795253

HYDRAULIC SYSTEM

246-2323 LINES GP-TILT CYLINDER

S/N: BXY1-UP

PART OF 255-0041, 255-0043 LIFT AR

AN ATTACHMENT

SMCS-5057, 5104 **i02674823**

NOTE	REF NO	GRAPHIC REF	PART NUMBER	QTY	PART NAME 1 2 3 4 5 6 (PRODUCT LEVEL)	SEE PAGE
	1	1	**156-2842**	1	BRACKET AS	
	2	1	**156-5781**	2	MANIFOLD	
	3	1	**165-2357**	1	BRACKET AS	
M		1	**8T-3597**	2	NUT-WELD (M12X1.75-THD)	
	4	1	**165-2358**	1	BRACKET AS	
	5	1	**165-3825**	1	BRACKET AS	
	6	1	**166-2101**	1	TUBE AS	
	7	1	**179-2229**	1	CABLE AS	
	8	1	**214-9523**	1	TUBE AS	
	9	1	**224-3872**	1	TUBE AS	
I	10	1	**304-7223**	1	HOSE AS	
	11	1	**103-1303**	6	CLAMP-HALF	
M	12	1	**180-4686**	1	BOLT (M10X1.5X60-MM)	
	13	1	**1P-3705**	2	SEAL-RECTANGULAR	
	14	1	**1P-3706**	5	SEAL-RECTANGULAR	
	15	1	**3E-9411**	14	WASHER-HARD (17.5X38X6-MM THK)	
	16	1	**5P-1076**	2	WASHER-HARD (13.5X30X4-MM THK)	
	17	1	**5P-8077**	4	FLANGE-HALF	
	18	1	**6V-1572**	1	CLIP (SLOT)	
	19	1	**6V-1573**	1	CLIP (TAB)	
	20	1	**6V-1574**	1	GROMMET	
M	21	1	**7X-2553**	6	BOLT (M16X2X40-MM)	
	22	1	**8T-4121**	4	WASHER-HARD (11X21X2.5-MM THK)	
	23	1	**8T-4122**	8	WASHER-HARD (17X32X3.5-MM THK)	
M	24	1	**8T-4133**	2	NUT (M10X1.5-THD)	
M	25	1	**8T-4140**	12	BOLT (M16X2X60-MM)	
M	26	1	**8T-4183**	3	BOLT (M12X1.75X40-MM)	
	27	1	**8T-4223**	3	WASHER-HARD (13.5X25.5X3-MM THK)	
M	28	1	**8T-4779**	6	BOLT (M16X2X35-MM)	
M	29	1	**8T-6385**	8	BOLT (M16X2X180-MM)	
	30	1	**9X-8257**	10	WASHER (17.5X30X3.5-MM THK)	

I-REFER TO HYDRAULIC INFORMATION SYSTEM
M-METRIC PART

246-2323 LINES GP-TILT CYLINDER *(contd.)* i02674823

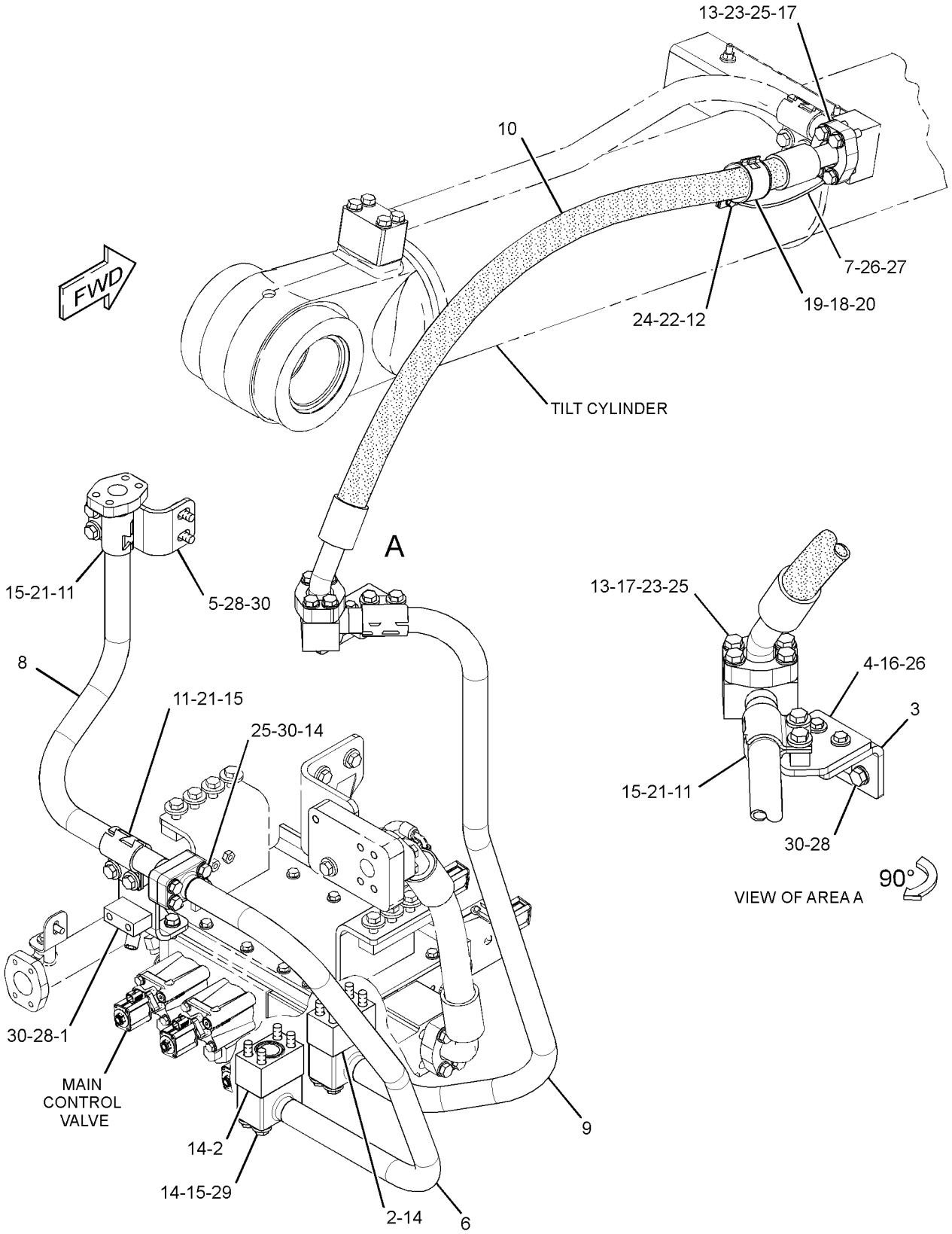

GRAPHIC #1 **<END>** g01346786

HYDRAULIC SYSTEM

246-6921 LINES GP-TILT CYLINDER–
CYLINDER MOUNTED, STANDARD LIFT
S/N: BXY1-UP
PART OF 255-0040, 255-0041 LIFT AR
AN ATTACHMENT

SMCS-5057, 5104 **i02928071**

NOTE	REF NO	GRAPHIC REF	PART NUMBER	QTY	PART NAME 1 2 3 4 5 6 (PRODUCT LEVEL)	SEE PAGE
	1	1	**115-1392**	1	MANIFOLD	
	2	1	**156-4403**	1	U-BOLT	
	3	1	**165-2093**	1	BRACKET AS	
	4	1	**165-2096**	1	TUBE AS	
	5	1	**243-3720**	2	CLAMP	
Y	6	1	**271-6441**	1	CYLINDER GP-TILT	1430
I	7	1	**304-7224**	1	HOSE AS	
	8	1	**304-7226**	2	BRACKET	
	9	1	**103-1303**	2	CLAMP-HALF	
	10	1	**1P-3705**	2	SEAL-RECTANGULAR	
	11	1	**1P-3706**	1	SEAL-RECTANGULAR	
	12	1	**3E-9411**	4	WASHER-HARD (17.5X38X6-MM THK)	
	13	1	**5P-1076**	2	WASHER-HARD (13.5X30X4-MM THK)	
	14	1	**5P-8077**	4	FLANGE-HALF	
	15	1	**6V-1574**	1	GROMMET	
M	16	1	**7X-2475**	4	BOLT (M16X2X130-MM)	
M	17	1	**7X-2543**	4	BOLT (M10X1.5X120-MM)	
M	18	1	**7X-2553**	4	BOLT (M16X2X40-MM)	
M	19	1	**7X-2556**	4	BOLT (M16X2X100-MM)	
	20	1	**7X-7729**	8	WASHER (11X25X3-MM THK)	
M	21	1	**8T-4133**	4	NUT (M10X1.5-THD)	
M	22	1	**8T-4140**	8	BOLT (M16X2X60-MM)	
M	23	1	**8T-4244**	2	NUT (M12X1.75-THD)	
	24	1	**9X-8257**	16	WASHER (17.5X30X3.5-MM THK)	
	25	1	**1P-3707**	1	SEAL-RECTANGULAR	

I-REFER TO HYDRAULIC INFORMATION SYSTEM
M-METRIC PART
Y-SEPARATE ILLUSTRATION

246-6921 LINES GP-TILT CYLINDER *(contd.)* i02928071

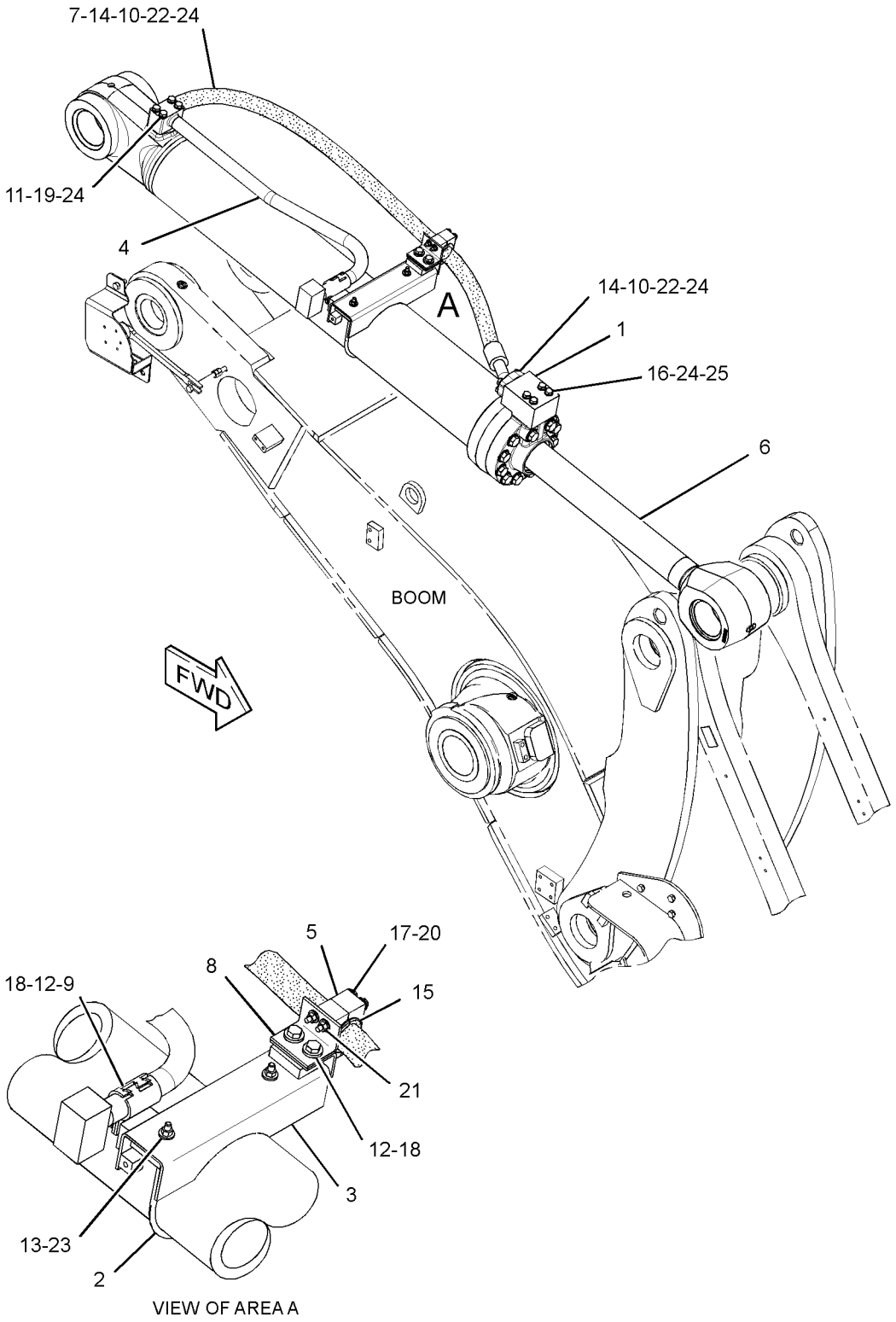

GRAPHIC #1 **<END>** g01480012

HYDRAULIC SYSTEM

291-3013 LINES GP-TILT CYLINDER

S/N: BXY1-UP

PART OF 275-7840 HYDRAULIC AR-TILT REGENERATION

SMCS-5057, 5104 **i03323425**

NOTE	REF NO	GRAPHIC REF	PART NUMBER	QTY	PART NAME 1 2 3 4 5 6 (PRODUCT LEVEL)	SEE PAGE
	1	1	**271-4587**	1	BLOCK	
	2	1	**283-0130**	1	BLOCK	
	3	1	**304-4540**	1	TUBE AS	
	4	1	**312-4790**	1	HOSE AS	
	5	1	**319-6688**	1	GUARD AS	
		1	**5T-8224**	2	SPACER (17X32X12.7-MM THK)	
	6	1	**322-2737**	1	TUBE AS	
I	7	1	**322-2926**	1	HOSE AS	
	8	1	**103-5350**	1	PLATE	
	9	1	**1P-3705**	4	SEAL-RECTANGULAR	
	10	1	**1P-3706**	5	SEAL-RECTANGULAR	
	11	1	**5P-8077**	8	FLANGE-HALF	
M	12	1	**7X-2559**	4	BOLT (M16X2X160-MM)	
M	13	1	**8T-4140**	28	BOLT (M16X2X60-MM)	
M	14	1	**8T-4173**	4	BOLT (M16X2X110-MM)	
M	15	1	**8T-4779**	2	BOLT (M16X2X35-MM)	
M	16	1	**8T-6385**	4	BOLT (M16X2X180-MM)	
M	17	1	**8T-7338**	2	BOLT (M16X2X45-MM)	
	18	1	**9X-8257**	42	WASHER (17.5X30X3.5-MM THK)	

I-REFER TO HYDRAULIC INFORMATION SYSTEM
M-METRIC PART

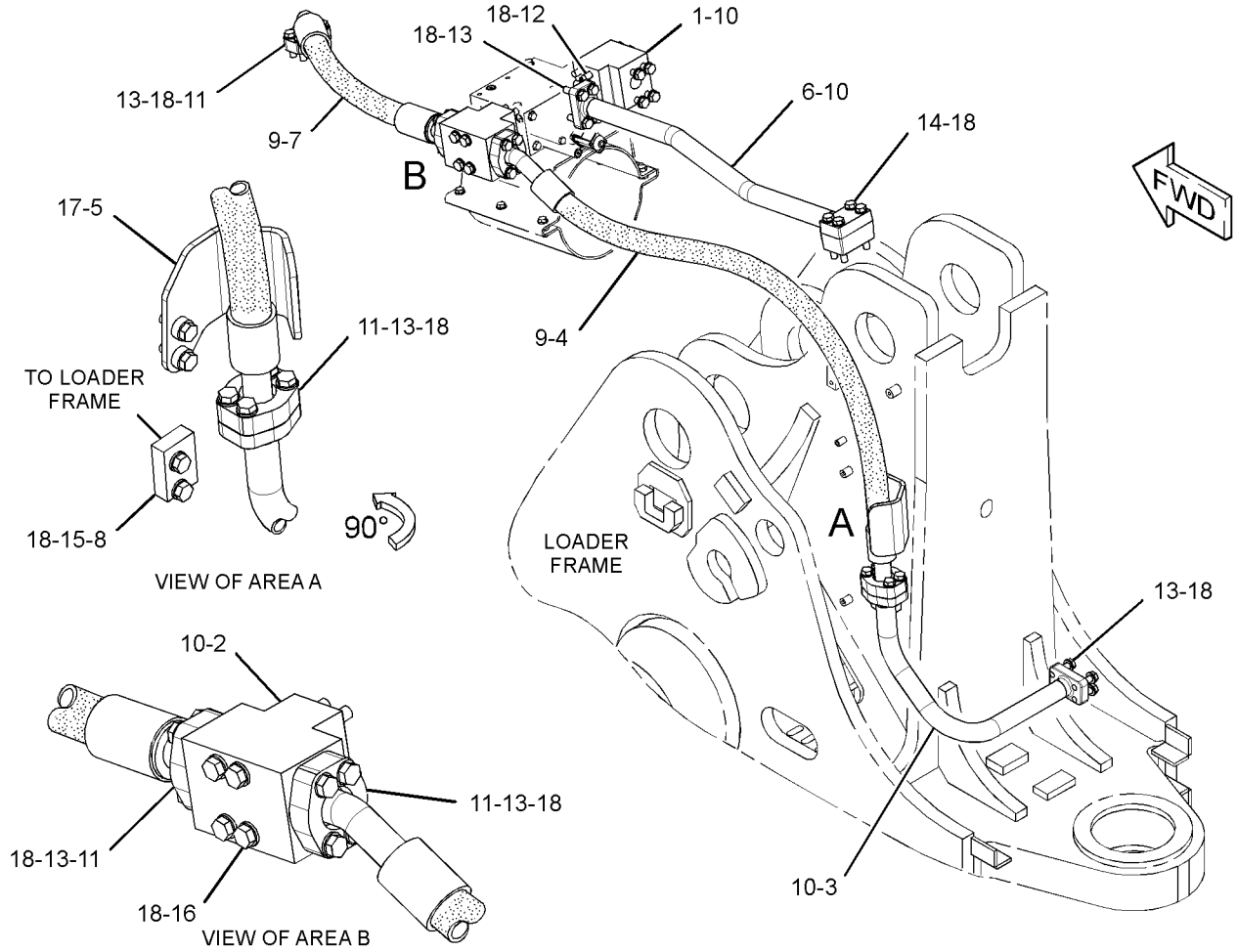

GRAPHIC #1 **<END>** g01762834

HYDRAULIC SYSTEM

296-7786 LINES GP-TILT CYLINDER

S/N: BXY1-UP

PART OF 275-7838 HYDRAULIC AR-TILT REGENERATION

SMCS-5057, 5104 **i03331441**

NOTE	PART NUMBER	QTY	PART NAME 1 2 3 4 5 6 (PRODUCT LEVEL)	SEE PAGE
	319-6688	1	GUARD AS	
	5T-8224	2	SPACER (17X32X12.7-MM THK)	
	312-4790	1	HOSE AS	
I	**329-0416**	1	HOSE AS	
	291-3014	1	TUBE AS	
	304-4540	1	TUBE AS	
	271-4587	1	BLOCK	
	283-0130	1	BLOCK	
M	**7X-2559**	4	BOLT (M16X2X160-MM)	
M	**8T-4140**	28	BOLT (M16X2X60-MM)	
M	**8T-4173**	4	BOLT (M16X2X110-MM)	
M	**8T-4779**	2	BOLT (M16X2X35-MM)	
M	**8T-6385**	4	BOLT (M16X2X180-MM)	
M	**8T-7338**	2	BOLT (M16X2X45-MM)	
	5P-8077	8	FLANGE-HALF	
	103-5350	1	PLATE	
	1P-3706	4	SEAL-RECTANGULAR	
	1P-3705	4	SEAL-RECTANGULAR	
	9X-8257	42	WASHER (17.5X30X3.5-MM THK)	

I-REFER TO HYDRAULIC INFORMATION SYSTEM
M-METRIC PART

<END>

HYDRAULIC SYSTEM

296-8265 LINES GP-TILT CYLINDER

S/N: BXY2733-UP
PART OF 298-6962, 298-6963 LIFT AR
AN ATTACHMENT

SMCS-5057, 5104 **i03362341**

NOTE	REF NO	GRAPHIC REF	PART NUMBER	QTY	PART NAME 1 2 3 4 5 6 (PRODUCT LEVEL)	SEE PAGE
	1	1	**6I-7433**	2	CLAMP	
	2	1	**8M-0627**	2	SPACER (0.495X0.625X2.56-IN THK)	
Y	3	1	**271-6441**	1	CYLINDER GP-TILT	1430
	4	1	**296-8263**	1	BRACKET AS	
M		1	**8T-3597**	5	NUT-WELD (M12X1.75-THD)	
	5	1	*296-8266*	1	BRACKET AS	
		1	**7T-1099**	2	LINK	
	6	1	**296-8269**	1	TUBE AS	
Y	7	1	**318-2925**	1	VALVE GP-CONTROL (TILT REGENERATION)	1614
	8	1	**156-4403**	1	U-BOLT	
	9	1	**1P-3705**	1	SEAL-RECTANGULAR	
	10	1	**1P-3706**	2	SEAL-RECTANGULAR	
	11	1	**2B-0122**	1	LOCK	
	12	1	**5P-1076**	5	WASHER-HARD (13.5X30X4-MM THK)	
M	13	1	**7X-2549**	2	BOLT (M12X1.75X100-MM)	
M	14	1	**7X-2556**	4	BOLT (M16X2X100-MM)	
M	15	1	**8T-4139**	3	BOLT (M12X1.75X30-MM)	
M	16	1	**8T-4173**	4	BOLT (M16X2X110-MM)	
M	17	1	**8T-4174**	4	BOLT (M16X2X120-MM)	
	18	1	**8T-4223**	2	WASHER-HARD (13.5X25.5X3-MM THK)	
M	19	1	**8T-4244**	2	NUT (M12X1.75-THD)	
	20	1	**9X-8257**	12	WASHER (17.5X30X3.5-MM THK)	

M-METRIC PART
Y-SEPARATE ILLUSTRATION

296-8265 **LINES GP-TILT CYLINDER** *(contd.)* **i03362341**

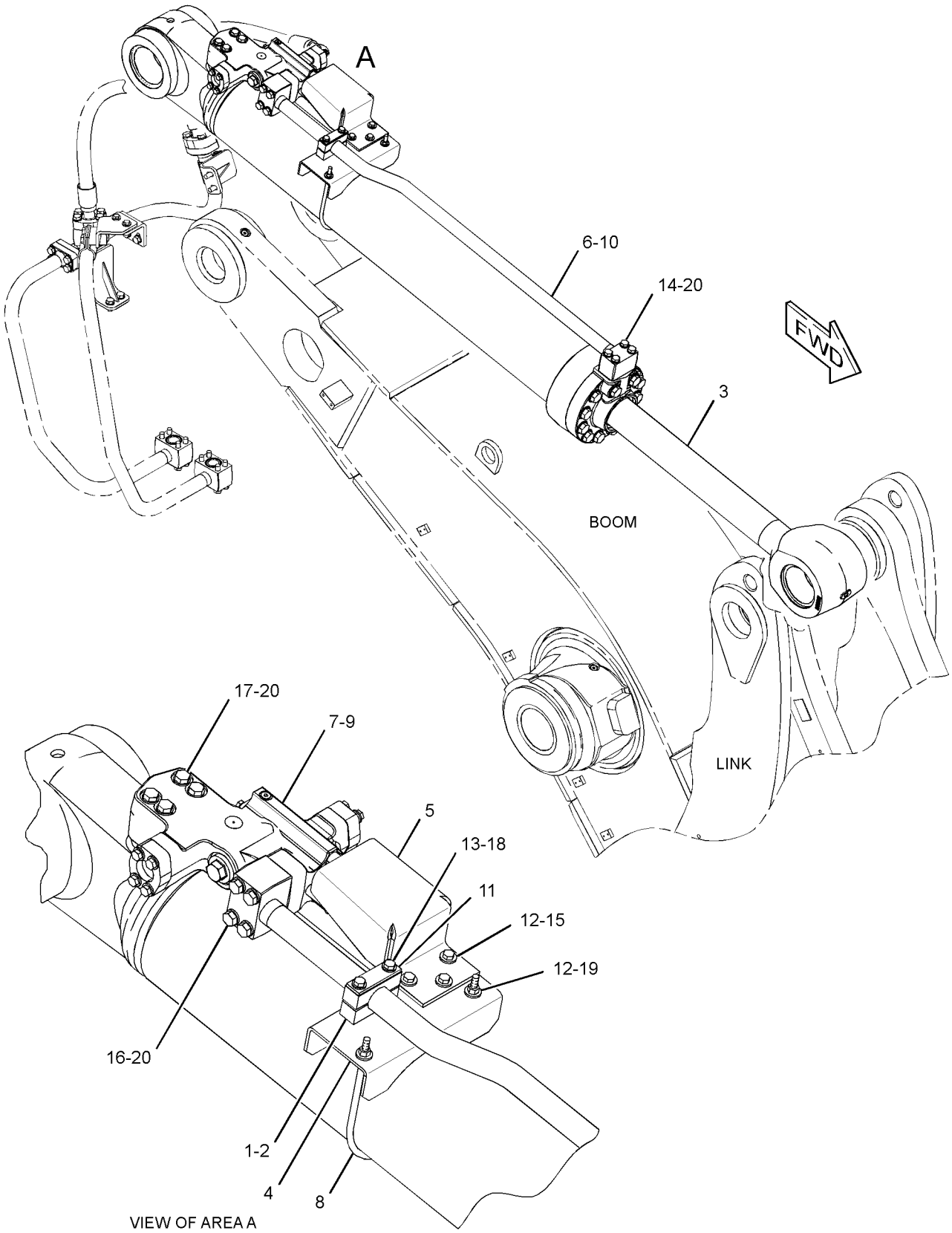

GRAPHIC #1 **<END>** g01745433

HYDRAULIC SYSTEM

296-8268 LINES GP-TILT CYLINDER

S/N: BXY2733-UP
PART OF 298-6964, 298-6965 LIFT AR
AN ATTACHMENT

SMCS-5057, 5104 **i03367640**

NOTE	REF NO	GRAPHIC REF	PART NUMBER	QTY	PART NAME 1 2 3 4 5 6 (PRODUCT LEVEL)	SEE PAGE
	1	1	**6I-7433**	2	CLAMP	
	2	1	**8M-0627**	2	SPACER (0.495X0.625X2.56-IN THK)	
Y	3	1	**231-1955**	1	CYLINDER GP-TILT (HIGH LIFT MACHINES)	1428
	4	1	**296-8263**	1	BRACKET AS	
M		1	**8T-3597**	5	NUT-WELD (M12X1.75-THD)	
	5	1	**296-8266**	1	BRACKET AS	
	6	1	**296-8270**	1	TUBE AS	
Y	7	1	**318-2925**	1	VALVE GP-CONTROL (TILT REGENERATION)	1614
	8	1	**156-4403**	1	U-BOLT	
	9	1	**1P-3705**	1	SEAL-RECTANGULAR	
	10	1	**1P-3706**	2	SEAL-RECTANGULAR	
	11	1	**2B-0122**	1	LOCK	
	12	1	**5P-1076**	5	WASHER-HARD (13.5X30X4-MM THK)	
M	13	1	**7X-2549**	2	BOLT (M12X1.75X100-MM)	
M	14	1	**7X-2556**	4	BOLT (M16X2X100-MM)	
M	15	1	**8T-4139**	3	BOLT (M12X1.75X30-MM)	
M	16	1	**8T-4173**	4	BOLT (M16X2X110-MM)	
M	17	1	**8T-4174**	4	BOLT (M16X2X120-MM)	
	18	1	**8T-4223**	2	WASHER-HARD (13.5X25.5X3-MM THK)	
M	19	1	**8T-4244**	2	NUT (M12X1.75-THD)	
	20	1	**9X-8257**	12	WASHER (17.5X30X3.5-MM THK)	

M-METRIC PART
Y-SEPARATE ILLUSTRATION

296-8268 **LINES GP-TILT CYLINDER** *(contd.)* **i03367640**

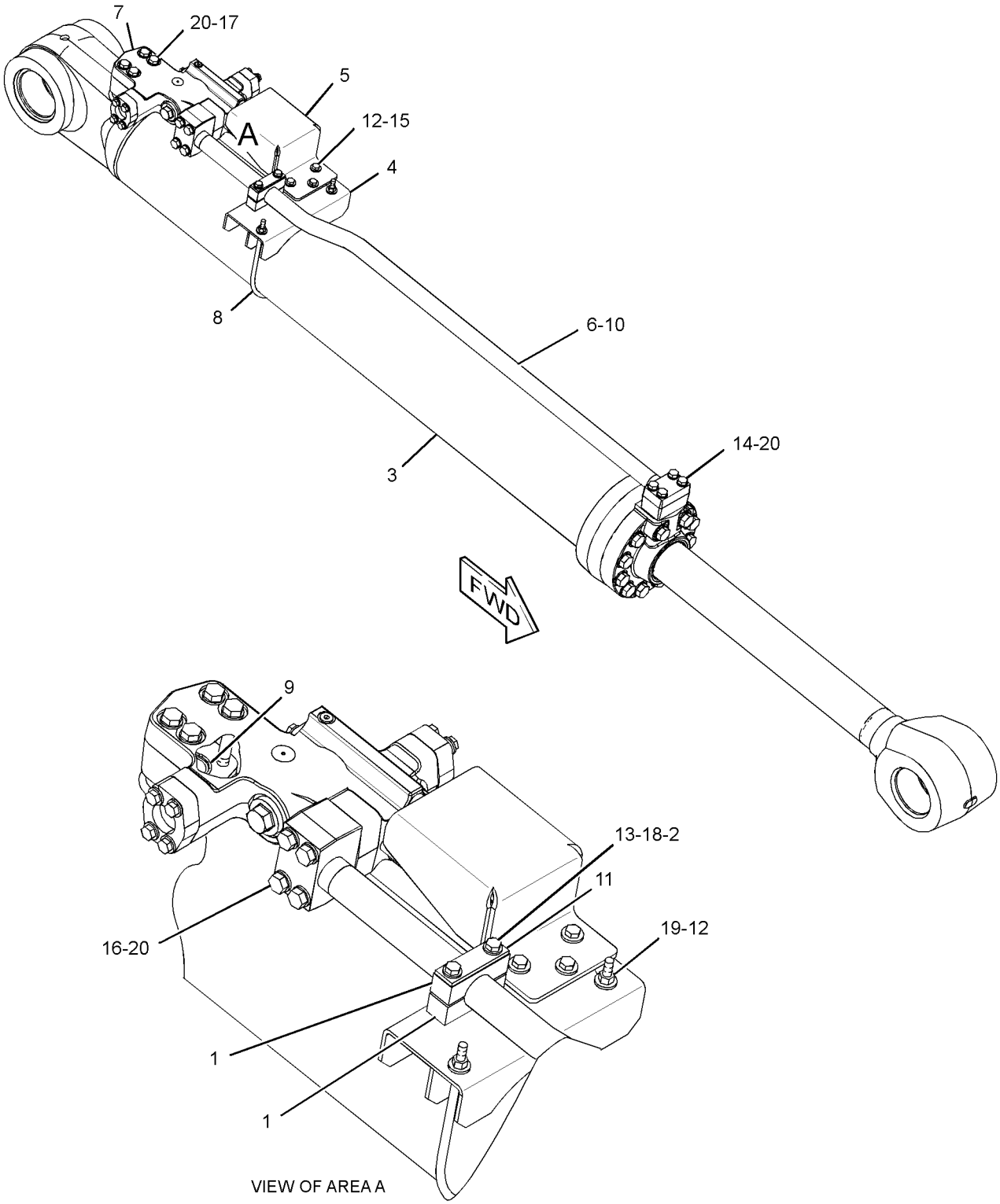

GRAPHIC #1 **<END>** g01942915

HYDRAULIC SYSTEM

296-8271 LINES GP-TILT CYLINDER

S/N: BXY2733-UP

PART OF 298-6962, 298-6964 LIFT AR

AN ATTACHMENT

SMCS-5057, 5104 **i03359640**

NOTE	REF NO	GRAPHIC REF	PART NUMBER	QTY	PART NAME 1 2 3 4 5 6 (PRODUCT LEVEL)	SEE PAGE
	1	1	**156-2842**	1	BRACKET AS	
	2	1	**165-3825**	1	BRACKET AS	
	3	1	**296-8276**	1	BRACKET AS	
	4	1	**296-8281**	1	TUBE AS	
	5	1	**296-8282**	1	TUBE AS	
	6	1	**315-9972**	1	HOSE AS	
	7	1	**315-9973**	1	HOSE AS	
	8	1	**315-9974**	1	TUBE AS	
	9	1	**316-5182**	1	BRACKET AS	
	10	1	**103-1303**	6	CLAMP-HALF	
	11	1	**1P-3704**	2	SEAL-RECTANGULAR	
	12	1	**1P-3705**	2	SEAL-RECTANGULAR	
	13	1	**1P-3706**	3	SEAL-RECTANGULAR	
	14	1	**1P-5767**	4	FLANGE-HALF	
	15	1	**3E-9411**	6	WASHER-HARD (17.5X38X6-MM THK)	
	16	1	**5P-1076**	2	WASHER-HARD (13.5X30X4-MM THK)	
	17	1	**5P-8077**	4	FLANGE-HALF	
M	18	1	**7X-2553**	6	BOLT (M16X2X40-MM)	
M	19	1	**7X-2556**	8	BOLT (M16X2X100-MM)	
M	20	1	**8T-4140**	12	BOLT (M16X2X60-MM)	
M	21	1	**8T-4183**	2	BOLT (M12X1.75X40-MM)	
M	22	1	**8T-4184**	8	BOLT (M12X1.75X45-MM)	
	23	1	**8T-4223**	8	WASHER-HARD (13.5X25.5X3-MM THK)	
M	24	1	**8T-4779**	6	BOLT (M16X2X35-MM)	
	25	1	**9X-8257**	26	WASHER (17.5X30X3.5-MM THK)	

M-METRIC PART

296-8271 **LINES GP-TILT CYLINDER** *(contd.)* **i03359640**

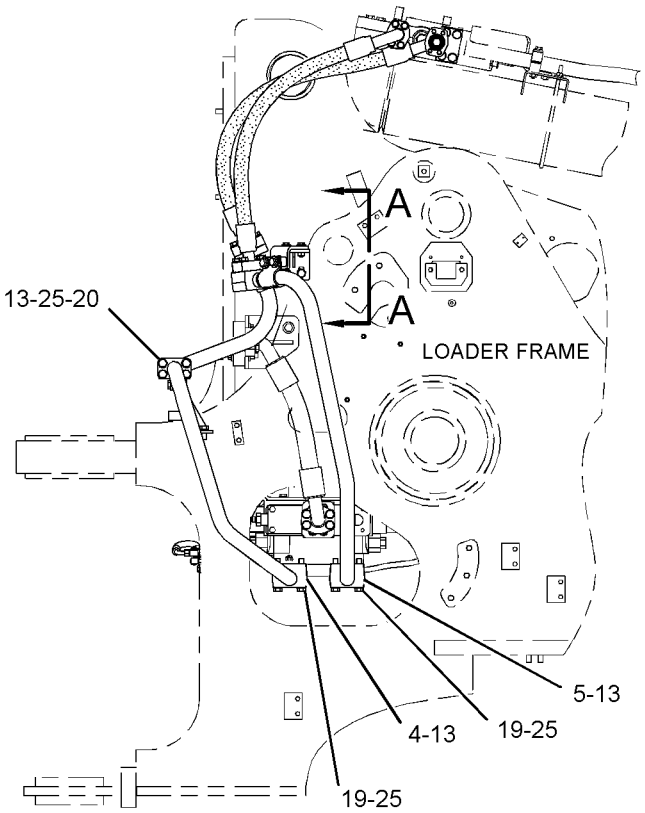

RIGHT SIDE VIEW

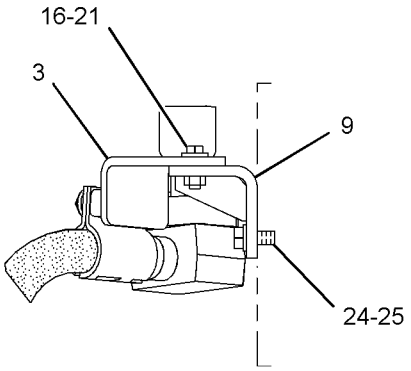

VIEW A-A

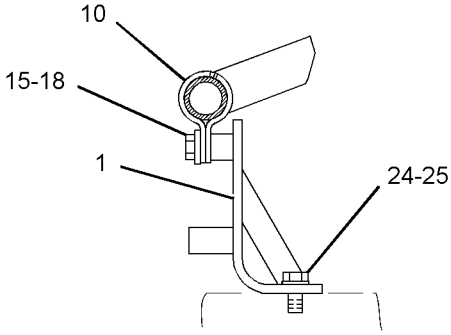

SECTION B-B

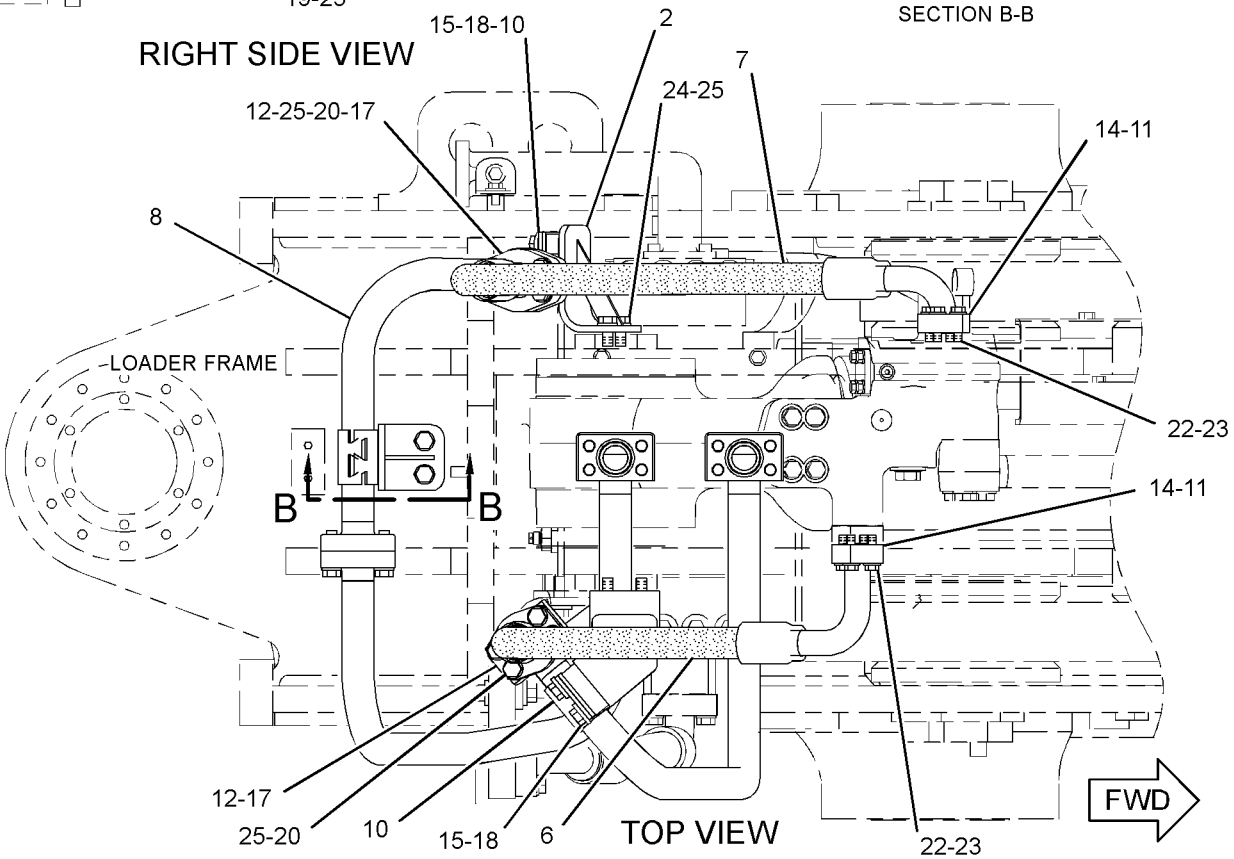

TOP VIEW

GRAPHIC #1 **<END>** g01739355

HYDRAULIC SYSTEM

296-8272 LINES GP-TILT CYLINDER

S/N: BXY2733-3999
PART OF 298-6963, 298-6965 LIFT AR
AN ATTACHMENT

SMCS-5057, 5104 **i03627534**

NOTE	REF NO	GRAPHIC REF	PART NUMBER	QTY	PART NAME 1 2 3 4 5 6 (PRODUCT LEVEL)	SEE PAGE
	1	1	**156-2842**	1	BRACKET AS	
	2	1	**156-5781**	2	MANIFOLD	
	3	1	**165-3825**	1	BRACKET AS	
	4	1	**315-8752**	1	TUBE AS	
	5	1	**296-8275**	1	TUBE AS	
	6	1	**296-8276**	1	BRACKET AS	
	7	1	**315-9972**	1	HOSE AS	
	8	1	**315-9973**	1	HOSE AS	
	9	1	**315-9974**	1	TUBE AS	
	10	1	**316-5182**	1	BRACKET AS	
	11	1	**103-1303**	6	CLAMP-HALF	
	12	1	**1P-3704**	2	SEAL-RECTANGULAR	
	13	1	**1P-3705**	2	SEAL-RECTANGULAR	
	14	1	**1P-3706**	5	SEAL-RECTANGULAR	
	15	1	**1P-5767**	4	FLANGE-HALF	
	16	1	**3E-9411**	14	WASHER-HARD (17.5X38X6-MM THK)	
	17	1	**5P-1076**	2	WASHER-HARD (13.5X30X4-MM THK)	
	18	1	**5P-8077**	4	FLANGE-HALF	
M	19	1	**7X-2553**	6	BOLT (M16X2X40-MM)	
M	20	1	**8T-4140**	12	BOLT (M16X2X60-MM)	
M	21	1	**8T-4183**	2	BOLT (M12X1.75X40-MM)	
M	22	1	**8T-4184**	8	BOLT (M12X1.75X45-MM)	
	23	1	**8T-4223**	8	WASHER-HARD (13.5X25.5X3-MM THK)	
M	24	1	**8T-4779**	6	BOLT (M16X2X35-MM)	
M	25	1	**8T-6385**	8	BOLT (M16X2X180-MM)	
	26	1	**9X-8257**	18	WASHER (17.5X30X3.5-MM THK)	

M-METRIC PART

296-8272 **LINES GP-TILT CYLINDER** *(contd.)* **i03627534**

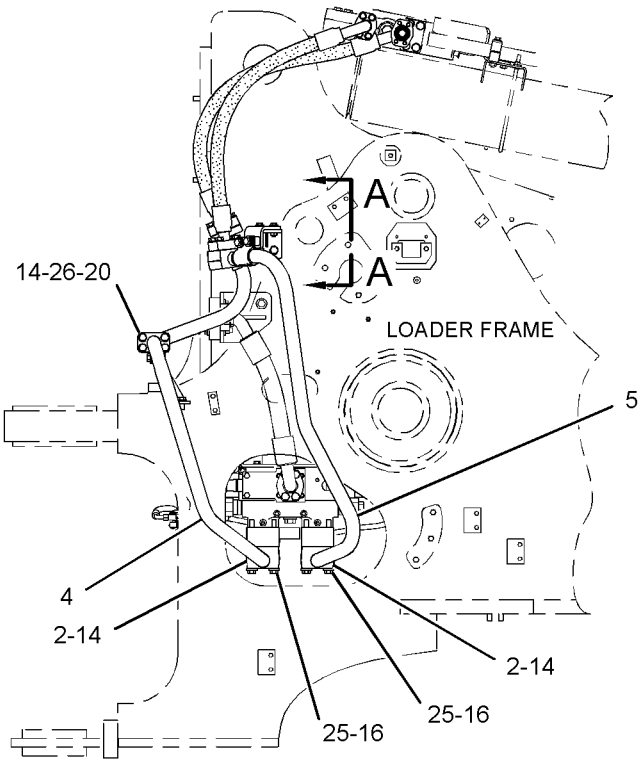

RIGHT SIDE VIEW

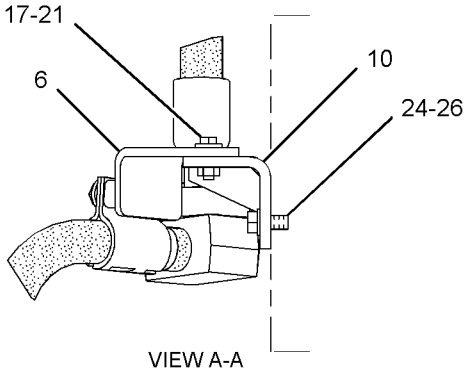

VIEW A-A

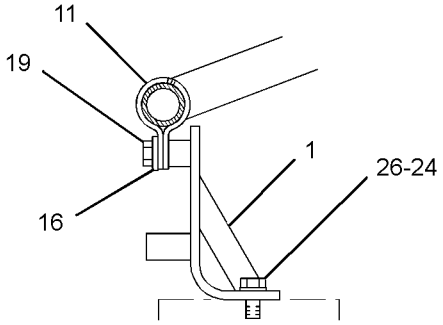

SECTION B-B

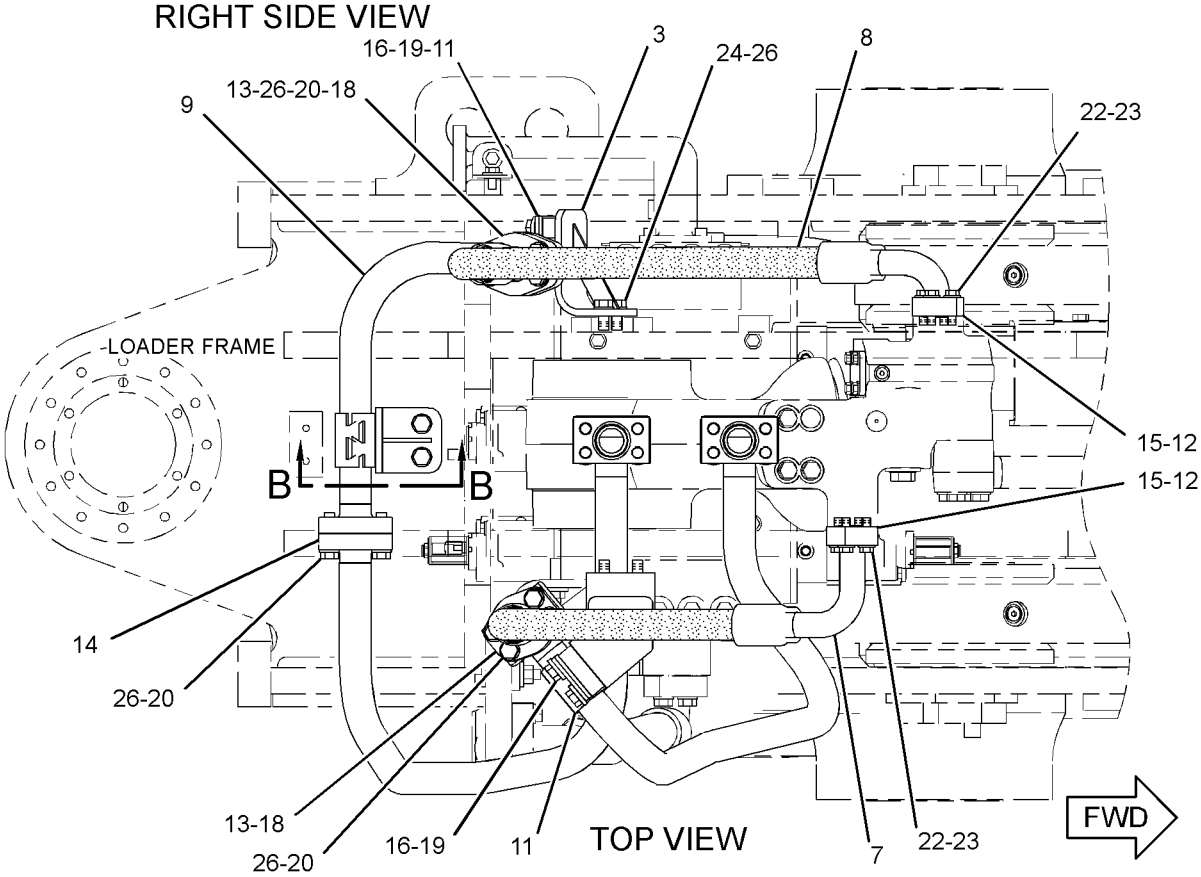

GRAPHIC #1 **<END>** g02061533

HYDRAULIC SYSTEM

315-8810 LINES GP-TILT CYLINDER

S/N: BXY4000-UP

PART OF 298-6963, 298-6965 LIFT AR

AN ATTACHMENT

SMCS-5057, 5104 **i03765135**

NOTE	REF NO	GRAPHIC REF	PART NUMBER	QTY	PART NAME 1 2 3 4 5 6 (PRODUCT LEVEL)	SEE PAGE
	1	1	**156-2842**	1	BRACKET AS	
	2	1	**156-5781**	2	MANIFOLD	
	3	1	**165-3825**	1	BRACKET AS	
	4	1	**296-8276**	1	BRACKET AS	
	5	1	**315-8752**	1	TUBE AS	
	6	1	**315-8791**	1	TUBE AS	
	7	1	**315-9972**	1	HOSE AS	
	8	1	**315-9973**	1	HOSE AS	
	9	1	**315-9974**	1	TUBE AS	
	10	1	**316-5182**	1	BRACKET AS	
M		1	**8T-3597**	2	NUT-WELD (M12X1.75-THD)	
	11	1	**103-1303**	6	CLAMP-HALF	
	12	1	**1P-3704**	2	SEAL-RECTANGULAR	
	13	1	**1P-3705**	2	SEAL-RECTANGULAR	
	14	1	**1P-3706**	5	SEAL-RECTANGULAR	
	15	1	**3E-9411**	4	WASHER-HARD (17.5X38X6-MM THK)	
	16	1	**5P-1076**	2	WASHER-HARD (13.5X30X4-MM THK)	
	17	1	**5P-8077**	4	FLANGE-HALF	
M	18	1	**7X-2553**	6	BOLT (M16X2X40-MM)	
M	19	1	**8T-4140**	12	BOLT (M16X2X60-MM)	
M	20	1	**8T-4183**	2	BOLT (M12X1.75X40-MM)	
M	21	1	**8T-4779**	6	BOLT (M16X2X35-MM)	
M	22	1	**8T-6385**	8	BOLT (M16X2X180-MM)	
	23	1	**9X-8257**	28	WASHER (17.5X30X3.5-MM THK)	

M-METRIC PART

315-8810 **LINES GP-TILT CYLINDER** *(contd.)* **i03765135**

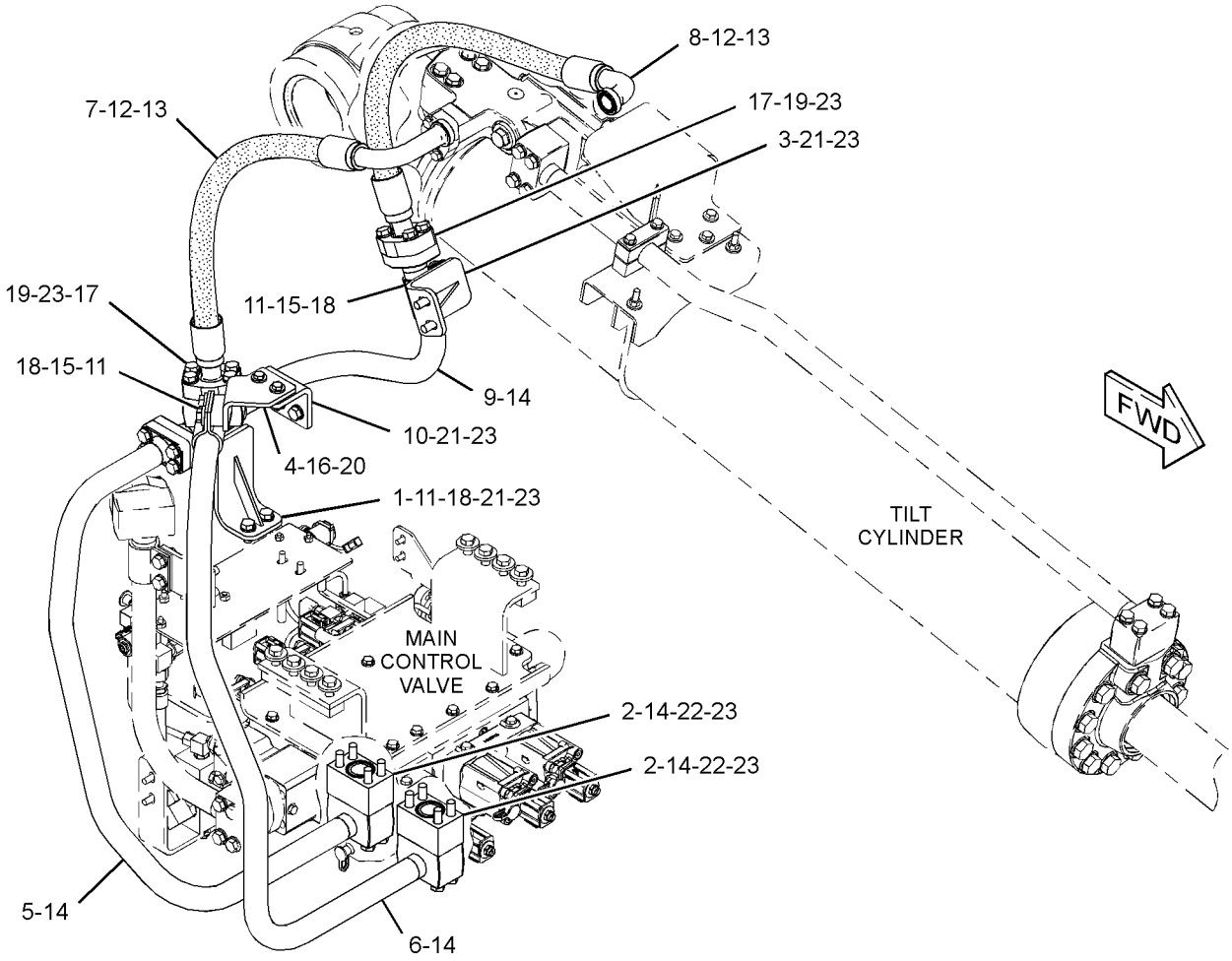

GRAPHIC #1 **<END>** g02031815

HYDRAULIC SYSTEM

322-3152 LINES GP-TILT CYLINDER

S/N: BXY1-UP

PART OF 290-5780 HYDRAULIC AR-TILT REGENERATION

SMCS-5057, 5104 **i03331420**

NOTE	REF NO	GRAPHIC REF	PART NUMBER	QTY	PART NAME 1 2 3 4 5 6 (PRODUCT LEVEL)	SEE PAGE
	1	1	**271-4587**	1	BLOCK	
	2	1	**283-0130**	1	BLOCK	
	3	1	**291-3014**	1	TUBE AS	
	4	1	**304-4540**	1	TUBE AS	
	5	1	**312-4790**	1	HOSE AS	
	6	1	**319-6688**	1	GUARD AS	
		1	**5T-8224**	2	SPACER (17X32X12.7-MM THK)	
I	7	1	**322-2926**	1	HOSE AS	
	8	1	**103-5350**	1	PLATE	
	9	1	**1P-3705**	4	SEAL-RECTANGULAR	
	10	1	**1P-3706**	5	SEAL-RECTANGULAR	
	11	1	**5P-8077**	8	FLANGE-HALF	
M	12	1	**7X-2559**	4	BOLT (M16X2X160-MM)	
M	13	1	**8T-4140**	28	BOLT (M16X2X60-MM)	
M	14	1	**8T-4173**	4	BOLT (M16X2X110-MM)	
M	15	1	**8T-4779**	2	BOLT (M16X2X35-MM)	
M	16	1	**8T-6385**	4	BOLT (M16X2X180-MM)	
M	17	1	**8T-7338**	2	BOLT (M16X2X45-MM)	
	18	1	**9X-8257**	42	WASHER (17.5X30X3.5-MM THK)	

I-REFER TO HYDRAULIC INFORMATION SYSTEM
M-METRIC PART

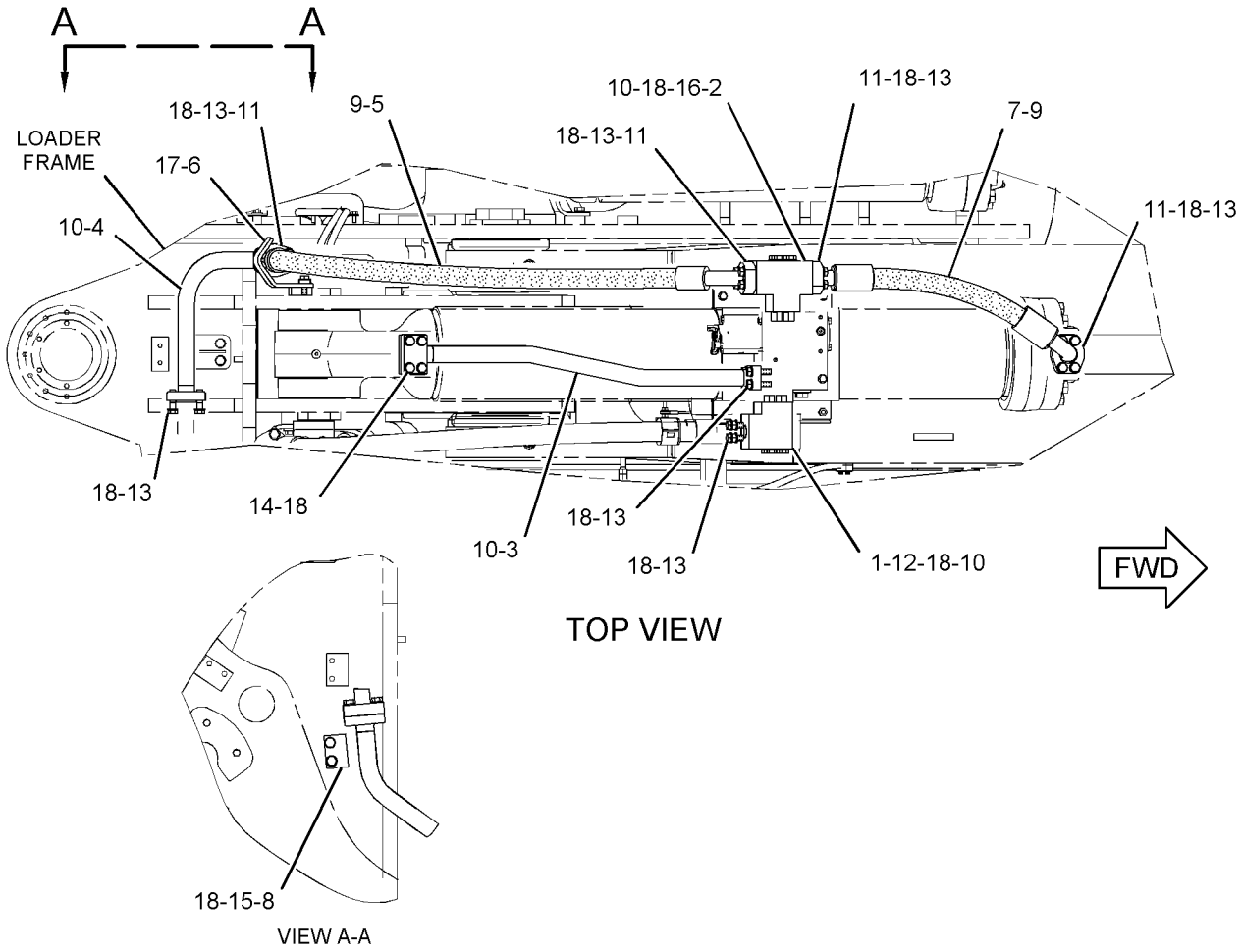

GRAPHIC #1 **<END>** g01732995

HYDRAULIC SYSTEM

322-3793 MANIFOLD GP-CONTROL—PARKING BRAKE

S/N: BXY4000-UP

PART OF 315-8815, 315-8830 VALVE & MTG GP-MAIN CONTROL

AN ATTACHMENT

SMCS-4264, 5072, 5264, 5467, 5479 **i03761281**

NOTE	REF NO	GRAPHIC REF	PART NUMBER	QTY	PART NAME 1 2 3 4 5 6 (PRODUCT LEVEL)	SEE PAGE
	1	1	**285-5629**	1	VALVE GP-SOLENOID (BRAKE COOLING)	
		1	**156-5970**	1	NUT (1/2-20-THD)	
		1	**252-0745**	1	COIL AS	

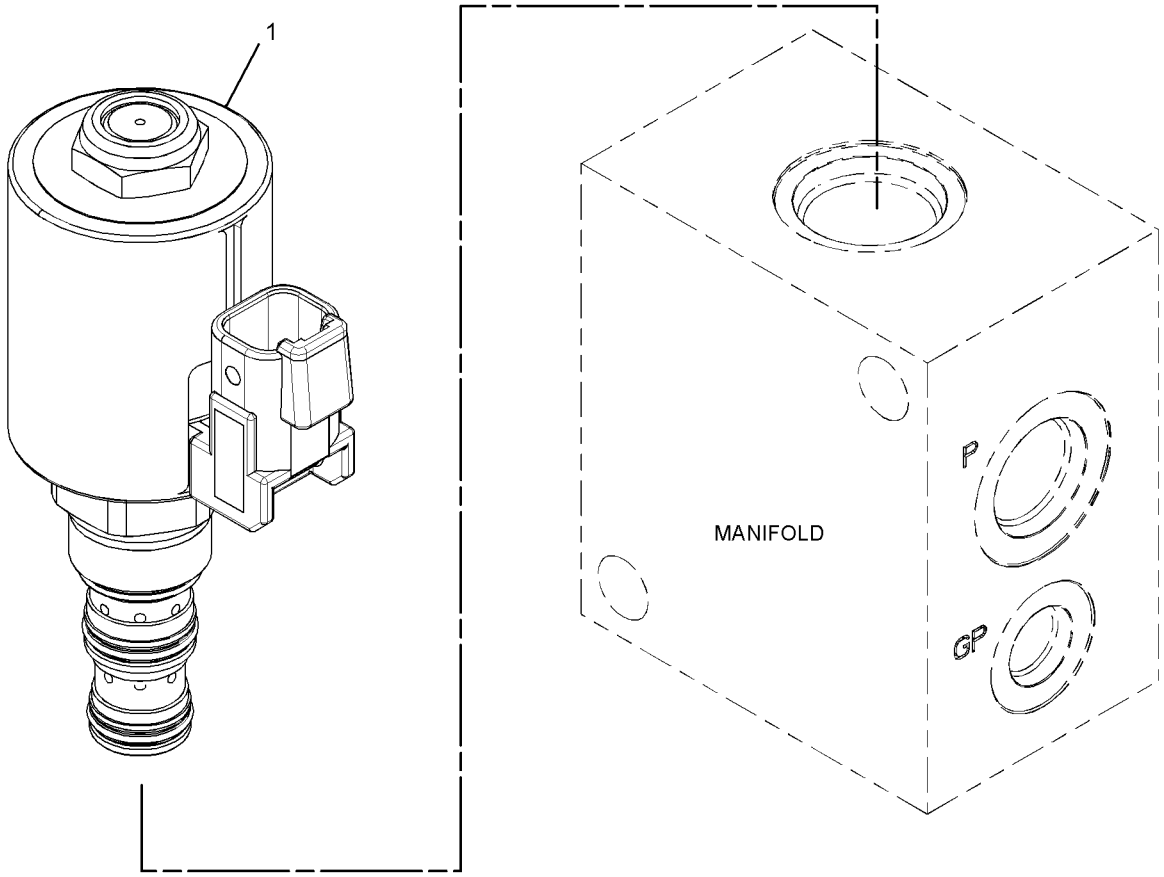

GRAPHIC #1 **<END>** g02034974

HYDRAULIC SYSTEM

326-3803 MANIFOLD GP-HYDRAULIC

S/N: BXY4000-UP

PART OF 345-3943 LINES GP-STEERING

SMCS-5264 **i03753156**

NOTE	REF NO	GRAPHIC REF	PART NUMBER	QTY	PART NAME 1 2 3 4 5 6 (PRODUCT LEVEL)	SEE PAGE
	1	1	**9T-7419**	1	VALVE GP-RELIEF	
		1	**5P-2199**	2	RING-BACKUP	
		1	**2M-9780**	1	SEAL-O-RING	
		1	**6E-0410**	1	SEAL-O-RING	

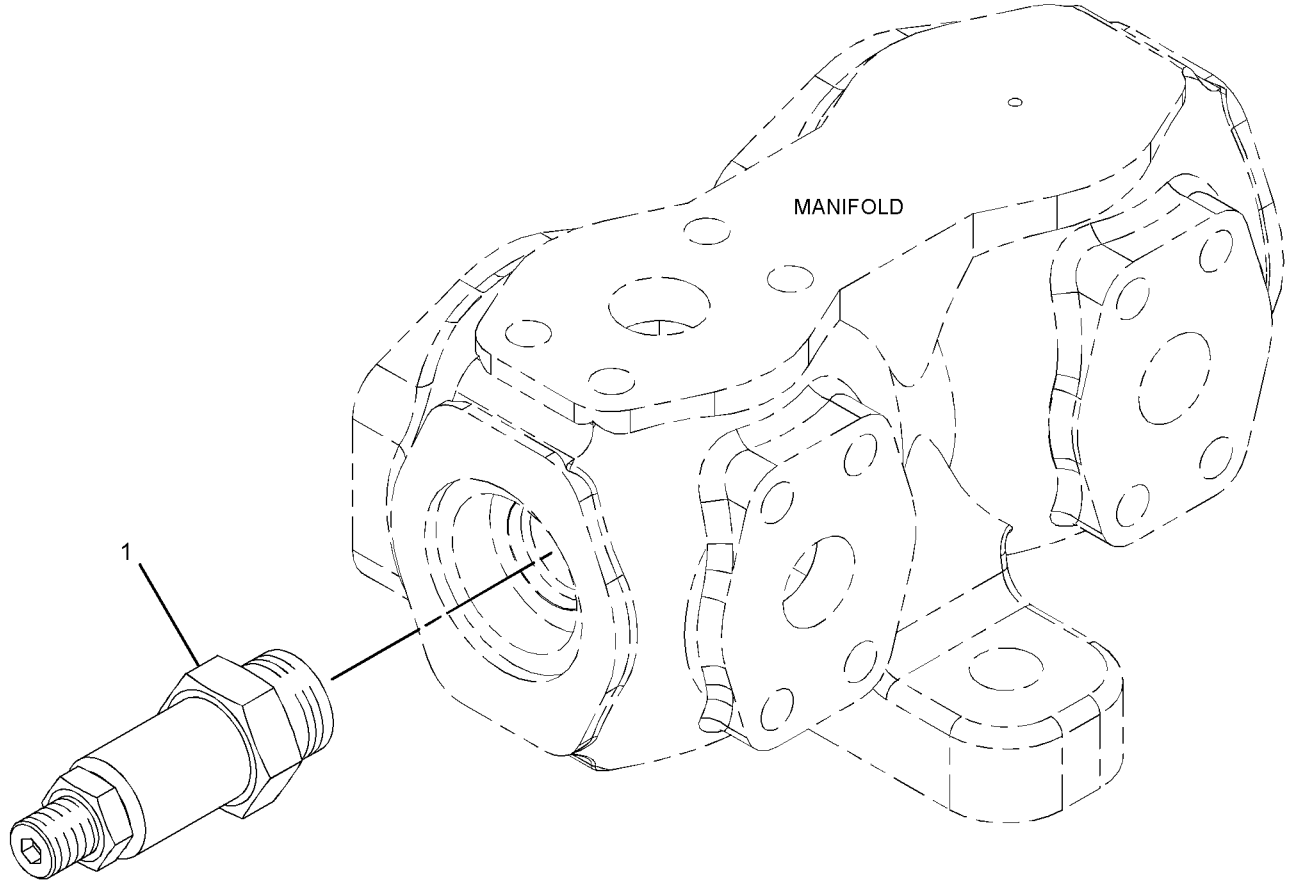

GRAPHIC #1 **<END>** g02033177

HYDRAULIC SYSTEM

226-2040 MOTOR & MTG GP-HYDRAULIC FAN

S/N: BXY1-UP

PART OF 225-5449, 298-2038, 345-3930 HYDRAULIC AR

SMCS-1386 **i02022998**

NOTE	REF NO	GRAPHIC REF	PART NUMBER	QTY	PART NAME 1 2 3 4 5 6 (PRODUCT LEVEL)	SEE PAGE
Y	1	1	**213-5268**	1	MOTOR GP-PISTON (HYDRAULIC FAN)	1541

Y-SEPARATE ILLUSTRATION

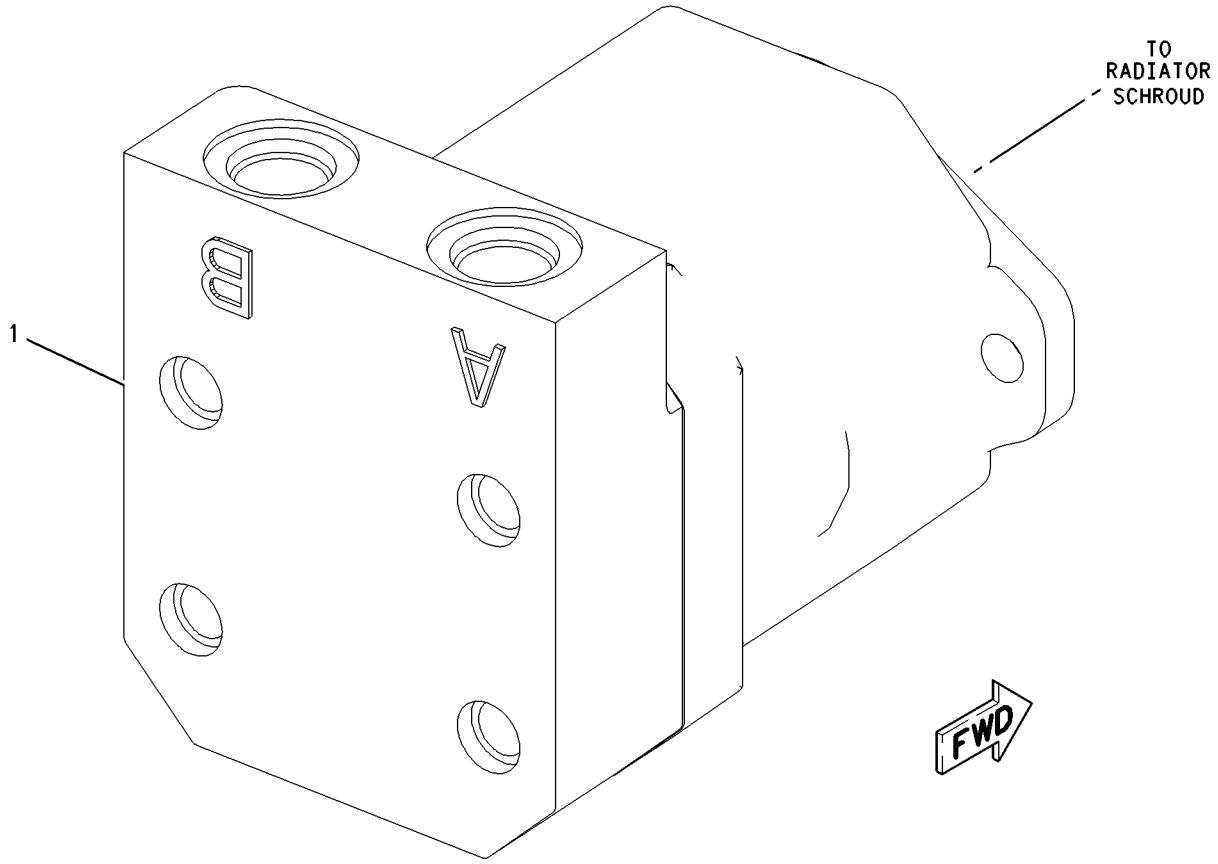

GRAPHIC #1 **<END>** g01004650

HYDRAULIC SYSTEM

213-5268 MOTOR GP-PISTON—HYDRAULIC FAN*R

S/N: BXY1-UP

PART OF 226-2040 MOTOR & MTG GP-HYDRAULIC FAN

SMCS-1386, 5058 **i01876766**

NOTE	REF NO	GRAPHIC REF	PART NUMBER	QTY	PART NAME 1 2 3 4 5 6 (PRODUCT LEVEL)	SEE PAGE
	1	1	**168-7319**	1	SEAL-SHAFT	
	2	1	**9S-8006**	1	PLUG-O RING	
	3	1	**2M-9780**	1	SEAL-O-RING	
	4	1	**185-0278**	1	SWASHPLATE	
Y	5	1	**185-0275**	1	ROTATING GP-MOTOR	1559
	6	1	**192-7470**	1	SEAL-O-RING	
M	7	1	**095-0690**	4	BOLT-SOCKET HEAD (M14X2X60-MM)	
	8	1	**7Y-5267**	1	RING-RETAINING	
	9	1	**188-6280**	1	DOWEL	
	10	1	**101-2862**	2	DOWEL	
	11	1	**185-0295**	1	BEARING	
	12	1	**185-0280**	1	PLATE	
	13	1	**216-2515**	1	SHAFT	
	14	1	**185-0296**	1	BEARING	
B	15	1	**168-2203**	1	SHIM-SHAFT	

B-USE AS REQUIRED
M-METRIC PART
Y-SEPARATE ILLUSTRATION

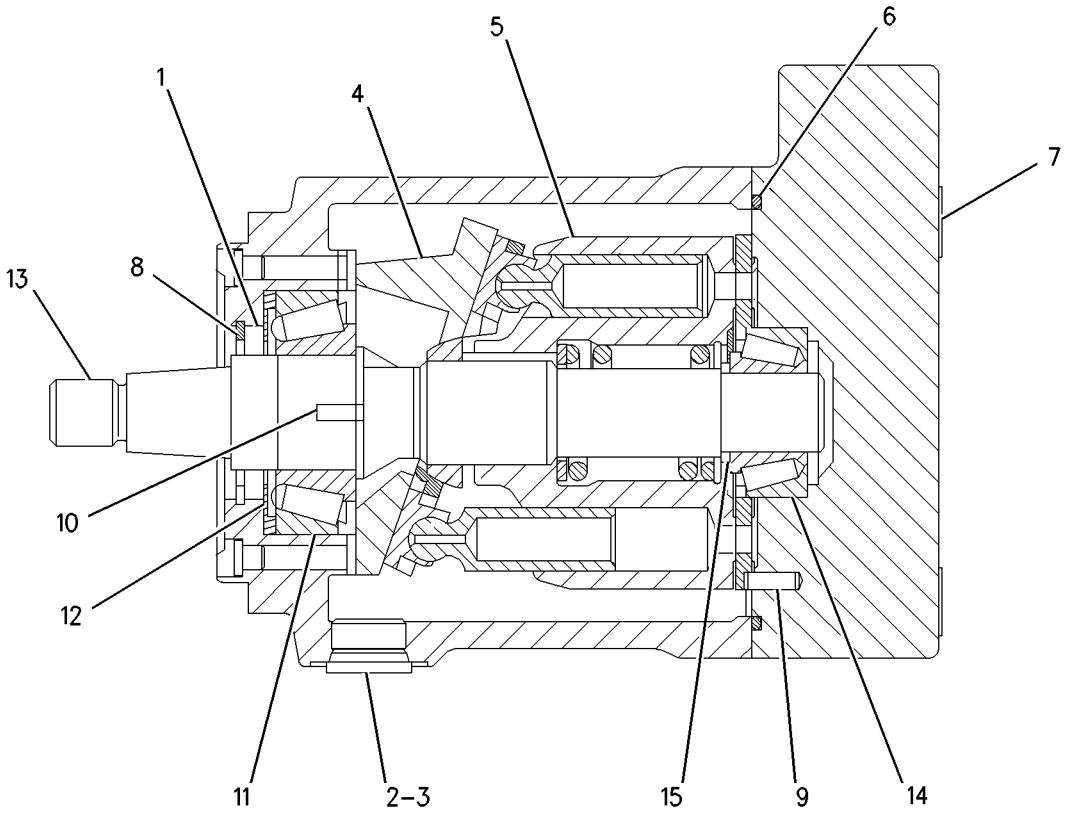

GRAPHIC #1 **<END>** g00954879

HYDRAULIC SYSTEM

226-1957 PUMP & MTG GP-HYDRAULIC FAN–
HIGH AMBIENT TEMPERATURE
S/N: BXY1-UP
PART OF 226-1956 COOLING AR-HIGH AMBIENT TEMP
AN ATTACHMENT

SMCS-1387 **i02933492**

NOTE	REF NO	GRAPHIC REF	PART NUMBER	QTY	PART NAME 1 2 3 4 5 6 (PRODUCT LEVEL)	SEE PAGE
	1	1	**6V-0852**	1	CAP-DUST	
	2	1	*164-5567*	1	COUPLER AS-QUICK DISCONNECT	
		1	**3J-1907**	1	SEAL-O-RING	
		1	**6V-3965**	1	FITTING (QUICK DISCONNECT)	
Y	3	1	**228-3638**	1	PUMP GP-PISTON (HYD FAN, HIGH AMBIENT TEMP)	1553
	4	1	*150-4047*	1	ADAPTER AS	
		1	**3J-7354**	1	SEAL-O-RING	
		1	**8T-2353**	1	ADAPTER	
	5	1	**5P-1076**	2	WASHER-HARD (13.5X30X4-MM THK)	
	6	1	**8T-8919**	2	BOLT (1/2-13X1.75-IN)	
	7	1	**223-2102**	1	SEAL-INTEGRAL	

Y-SEPARATE ILLUSTRATION

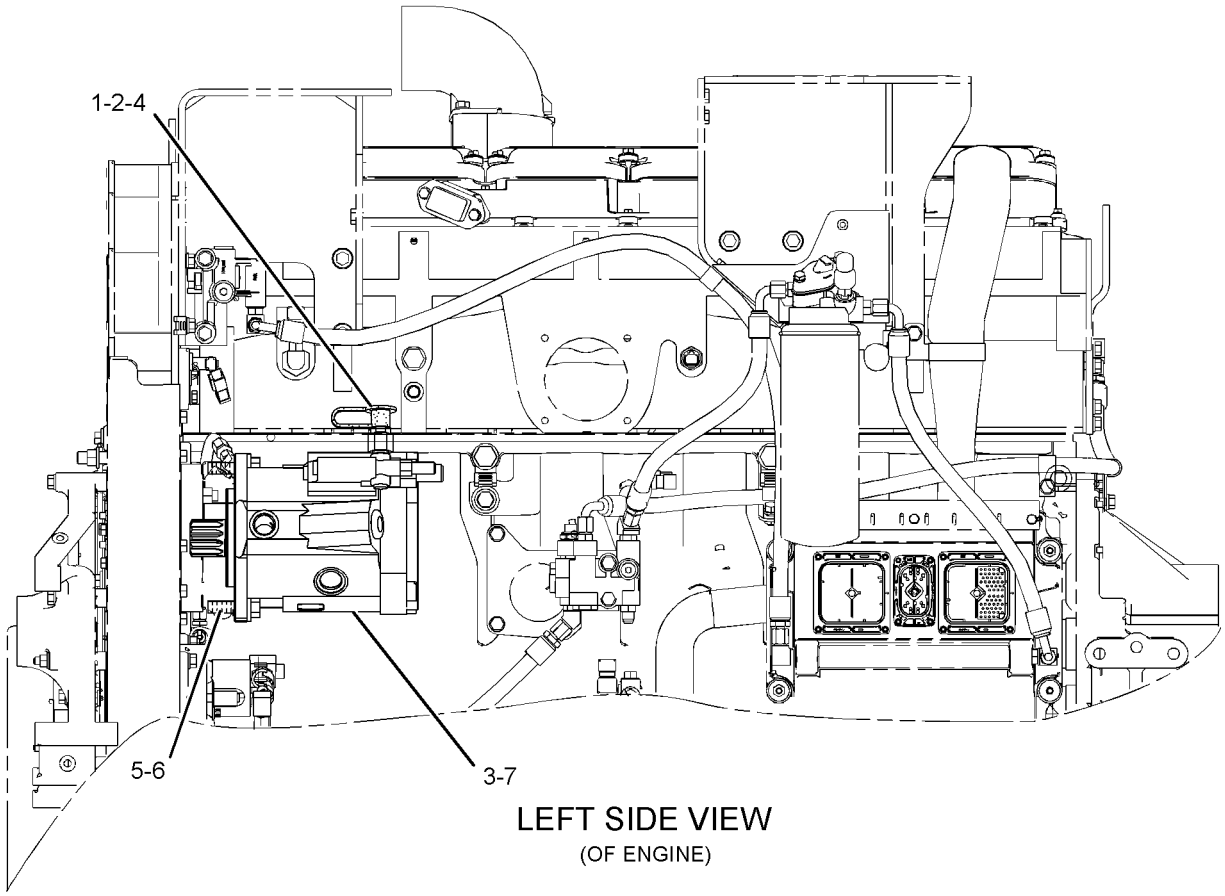

LEFT SIDE VIEW
(OF ENGINE)

GRAPHIC #1 **<END>** g01106372

HYDRAULIC SYSTEM

228-0376 PUMP & MTG GP-HYDRAULIC FAN

S/N: BXY1-UP
PART OF 225-6725, 226-1954 COOLING AR
AN ATTACHMENT

SMCS-1387 **i02854943**

NOTE	REF NO	GRAPHIC REF	PART NUMBER	QTY	PART NAME 1 2 3 4 5 6 (PRODUCT LEVEL)	SEE PAGE
	1	1	**6V-0852**	1	CAP-DUST	
	2	1	*164-5567*	1	COUPLER AS-QUICK DISCONNECT	
		1	**3J-1907**	1	SEAL-O-RING	
		1	**6V-3965**	1	FITTING (QUICK DISCONNECT)	
YR	3	1	**228-3636**	1	PUMP GP-PISTON (HYDRAULIC FAN)	1551
	4	1	*150-4047*	1	ADAPTER AS	
		1	**3J-7354**	1	SEAL-O-RING	
		1	**8T-2353**	1	ADAPTER	
	5	1	**5P-1076**	2	WASHER-HARD (13.5X30X4-MM THK)	
	6	1	**8T-8919**	2	BOLT (1/2-13X1.75-IN)	
	7	1	**223-2102**	1	SEAL-INTEGRAL	

R-REMFG PART MAY BE AVAILABLE
Y-SEPARATE ILLUSTRATION

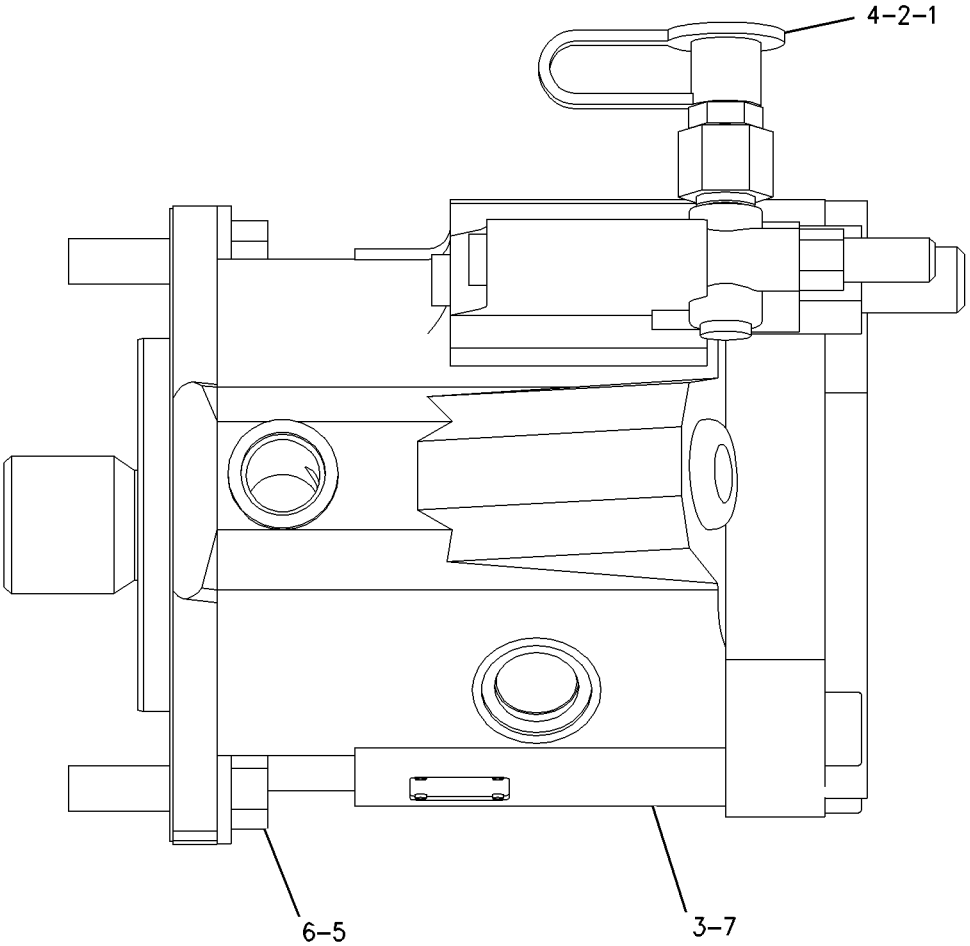

GRAPHIC #1 **<END>** g01000907

HYDRAULIC SYSTEM

230-2406 PUMP & MTG GP-IMPLEMENT

S/N: BXY1-3999

PART OF 225-5449, 298-2038 HYDRAULIC AR

SMCS-5084 **i03155666**

NOTE	REF NO	GRAPHIC REF	PART NUMBER	QTY	PART NAME 1 2 3 4 5 6 (PRODUCT LEVEL)	SEE PAGE
Y	1	1	**216-8978**	1	PUMP GP-PISTON (IMPLEMENT)	1546
	2	1	**6V-7681**	1	SEAL-O-RING	
M	3	1	**7X-2563**	4	BOLT (M20X2.5X60-MM)	
	4	1	**8T-5439**	4	WASHER-HARD (21.5X45X6-MM THK)	

M-METRIC PART
Y-SEPARATE ILLUSTRATION

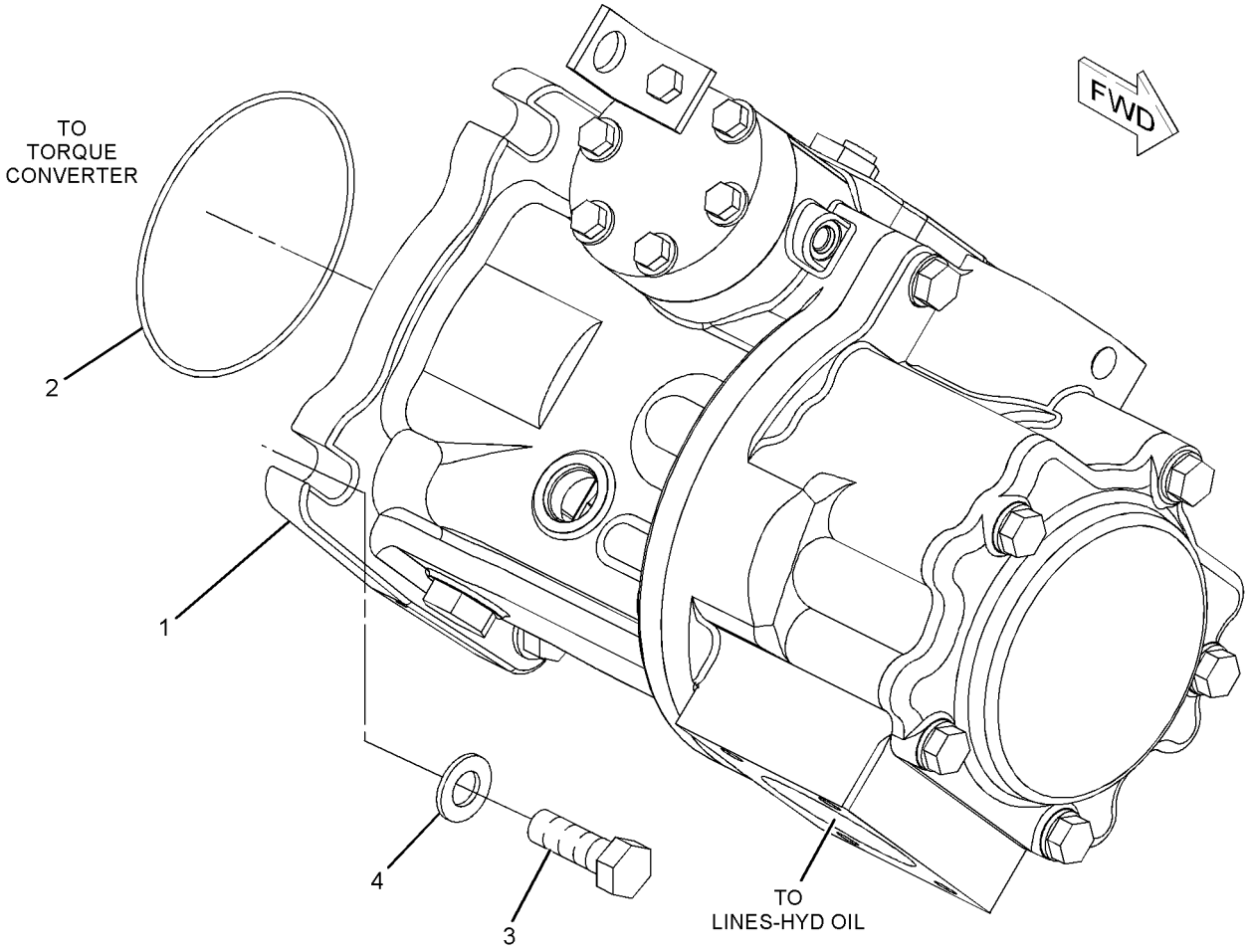

GRAPHIC #1 **<END>** g01021013

HYDRAULIC SYSTEM

345-3933 PUMP & MTG GP-IMPLEMENT

S/N: BXY4000-UP

PART OF 345-3930 HYDRAULIC AR

SMCS-5084 **i03750955**

NOTE	REF NO	GRAPHIC REF	PART NUMBER	QTY	PART NAME 1 2 3 4 5 6 (PRODUCT LEVEL)	SEE PAGE
Y	1	1	**346-6095**	1	PUMP GP-PISTON	1555
	2	1	**6V-7681**	1	SEAL-O-RING	
M	3	1	**7X-2563**	4	BOLT (M20X2.5X60-MM)	
	4	1	**8T-1739**	4	WASHER-HARD (21X40X3.5-MM THK)	

M-METRIC PART
Y-SEPARATE ILLUSTRATION

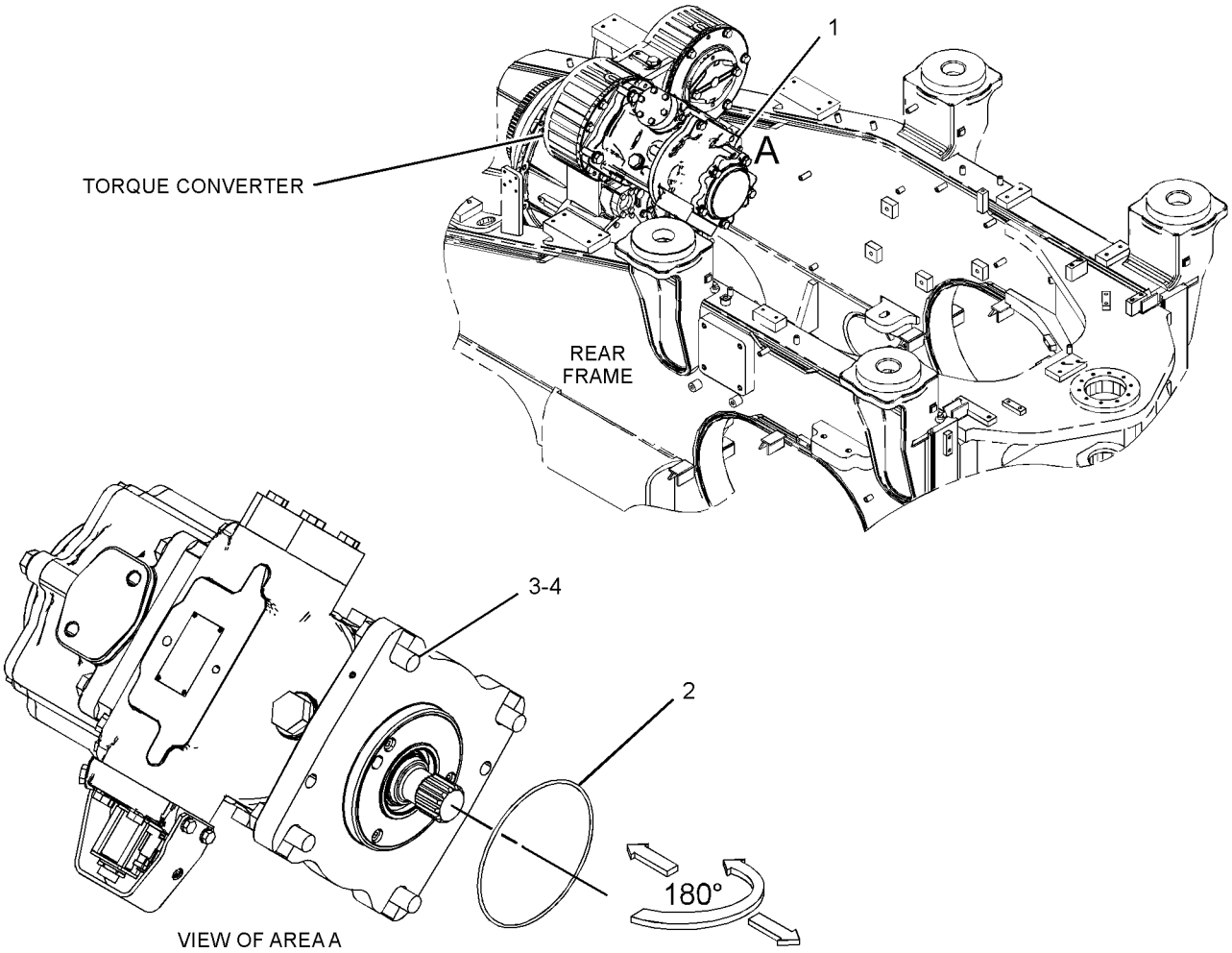

GRAPHIC #1 **<END>** g02038773

HYDRAULIC SYSTEM

216-8978 PUMP GP-PISTON—IMPLEMENT*R

S/N: BXY1-3999

PART OF 230-2406 PUMP & MTG GP-IMPLEMENT

SMCS-5070 **i02573851**

NOTE	REF NO	GRAPHIC REF	PART NUMBER	QTY	PART NAME 1 2 3 4 5 6 (PRODUCT LEVEL)	SEE PAGE
	1	2	**4B-4158**	4	SCREW-DRIVE (NO 4X0.25-IN)	
	2	2	**8J-0101**	1	PLATE-NOTICE (HYDRAULIC OIL FILL)	
	3	2	**006-0136**	1	KEY	
	4	1	**110-2973**	2	BEARING-SPECIAL ROLLER	
	5	2	**110-3971**	1	SWASHPLATE	
	6	2	**110-3978**	1	SPRING-WAVE	
	7	2	**118-5805**	1	BEARING-SPECIAL RACE	
	8	2	**137-5646**	1	SPACER (70.4X87.5X7.6-MM THK)	
	9	2	**143-2006**	1	COVER AS	
	10	3	**146-3728**	1	WASHER-SPRING	
	11	2	**146-8990**	1	IMPELLER	
	12	2	**146-8991**	1	SPACER (29X38X1.57-MM THK)	
	13	3	**148-2350**	1	COIL AS	
	14	2	**148-3548**	1	BEARING	
	15	2	**150-4355**	9	PISTON AS	
	16	3	**155-2251**	1	PLATE	
	17	2	**155-4326**	1	COVER	
	19	2	**159-7320**	1	PLATE-RETAINER	
	20	1	**164-3256**	1	PLATE-PORT	
	21	3	**165-6062**	2	LINK	
	22	2	**175-7887**	2	DOWEL	
	23	3	**179-2006**	1	RETAINER AS	
		3	**6V-3382**	2	SEAL-LIP TYPE	
		3	**124-1555**	1	PLUG	
	24	1	**184-3635**	1	SLIDE-ACTUATOR	
	25	2	**185-3889**	1	SHAFT	
	26	2	**187-9116**	1	BARREL AS-PUMP	
	27	1	**213-3221**	1	ACTUATOR	
	28	1	**264-0010**	1	RETAINER	
	29	1	**214-2445**	1	SPRING	
	30	2	**214-6489**	1	BALL	
	31	2	**269-5755**	1	COVER	
	32	1	**250-9329**	1	BODY AS	
		1	**124-1555**	1	PLUG	
	33	1	**252-4537**	1	HEAD-PUMP	
	34	3	**263-7732**	1	HOUSING AS	
		3	**124-1555**	1	PLUG	
	35	2	**142-0149**	1	SPACER (70.75X80X1.07-MM THK)	
	36	3	**030-4605**	1	SEAL-O-RING	
M	37	2	**096-0008**	6	BOLT-SOCKET HEAD (M16X2X140-MM)	
	39	2	**143-7319**	1	RACE-ROLLER BEARING	
	40	3	**154-4133**	1	CARTRIDGE AS	
	41	3	**177-1403**	1	SPRING	
	42	3	**177-1405**	1	SPRING	
	43	1	**1P-3709**	1	SEAL-RECTANGULAR	
	44	1	**2A-3630**	2	PIN	
	45	2	**2R-0239**	1	SEAL-O-RING	
	46	2	**3C-8388**	2	PIN-ROLL	
	47	2	**3J-0634**	1	SEAL-O-RING	
	48	2	**3J-1907**	2	SEAL-O-RING	
	49	3	**3J-7354**	1	SEAL-O-RING	
	50	1,2,3	**4J-5309**	3	SEAL-O-RING	
M	51	3	**5A-3604**	3	BOLT-SOCKET HEAD (M8X1.25X25-MM)	
	52	3	**5H-8848**	1	SEAL-O-RING	
	53	1	**5P-8245**	6	WASHER-HARD (13.5X25.5X3-MM THK)	
	54	3	**6F-5559**	1	SEAL-O-RING	

216-8978 PUMP GP-PISTON *(contd.)* i02573851

NOTE	REF NO	GRAPHIC REF	PART NUMBER	QTY	PART NAME 1 2 3 4 5 6 (PRODUCT LEVEL)	SEE PAGE
	55	1	**6F-7061**	2	DOWEL	
	56	3	**6S-3002**	1	SEAL-O-RING	
M	57	1	**6V-3823**	6	BOLT (M12X1.75X60-MM)	
M	58	1	**6V-5684**	6	BOLT (M12X1.75X45-MM)	
M	59	2	**6V-5686**	7	BOLT (M16X2X50-MM)	
	60	2	**6V-8243**	1	RING-RETAINING	
	61	1	**7F-8607**	6	SEAL-O-RING	
	62	1	**7M-8485**	4	SEAL-O-RING	
M	63	2	**8T-0267**	5	BOLT-SOCKET HEAD (M6X1X12-MM)	
M	64	2	**162-2165**	4	BOLT-SOCKET HEAD (M4X0.7X16-MM)	
	65	1	**9S-4181**	4	PLUG-O-RING	
	66	2	**9S-4191**	2	PLUG-O-RING	
	67	3	**9S-8002**	1	PLUG-O-RING	
	68	2	**9X-8268**	7	WASHER (17.5X30X3.5-MM THK)	
	69	2	**3D-4603**	1	PLUG-PIPE	
					AVAILABLE REPAIR KIT(S):	
			185-5352	1	KIT-SEAL	
					INCLUDES PIN, SEAL-ORINGS, RING-BACKUP, CAP-DUST, SEAL-LIP, AND RING-RETAINING	
			185-5354		KIT-SPACER	
					INCLUDES THREE SPACERS	
			227-1069		KIT-SPRING	

M-METRIC PART

216-8978 PUMP GP-PISTON *(contd.)* **i02573851**

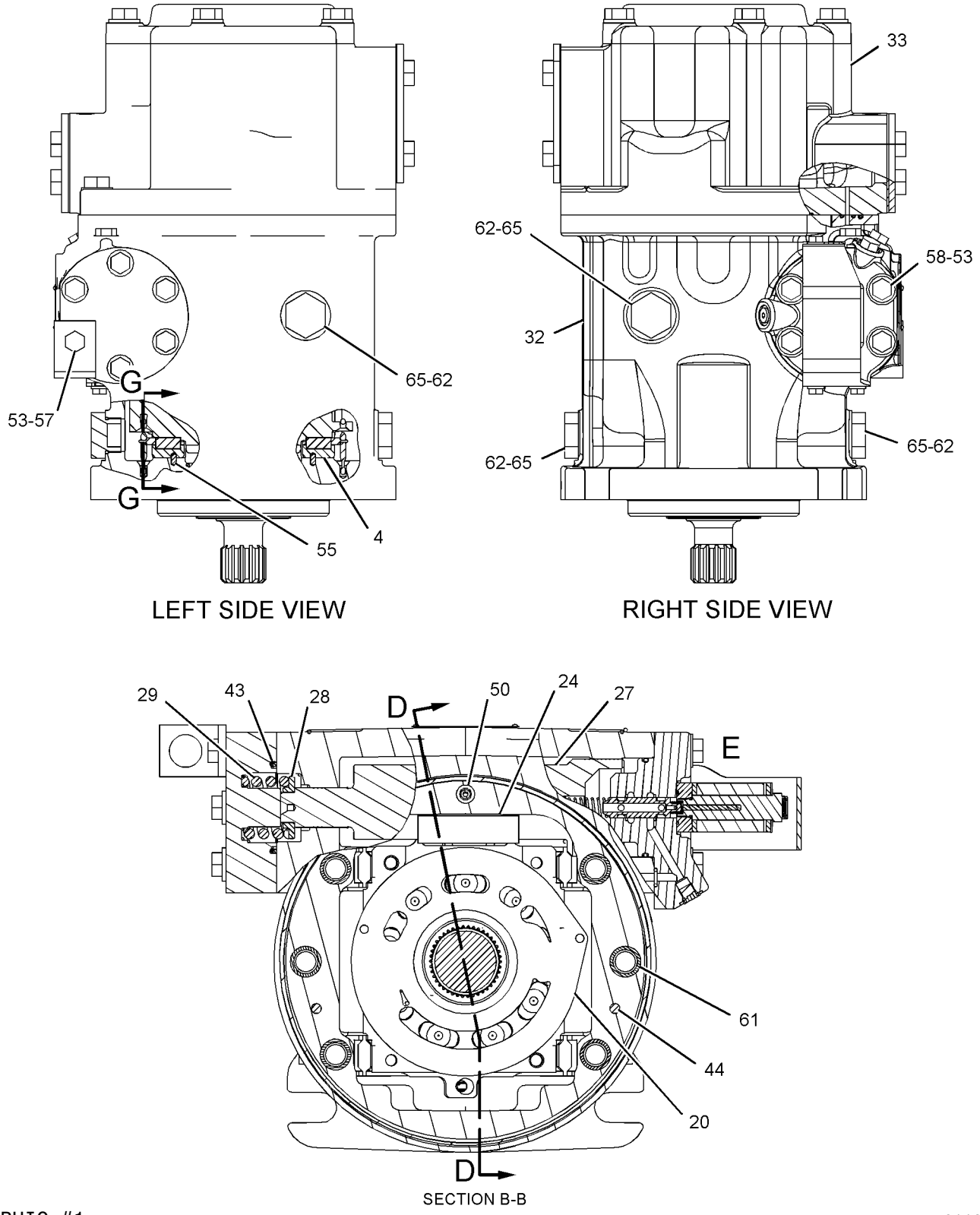

GRAPHIC #1 g01126525

216-8978 PUMP GP-PISTON *(contd.)* **i02573851**

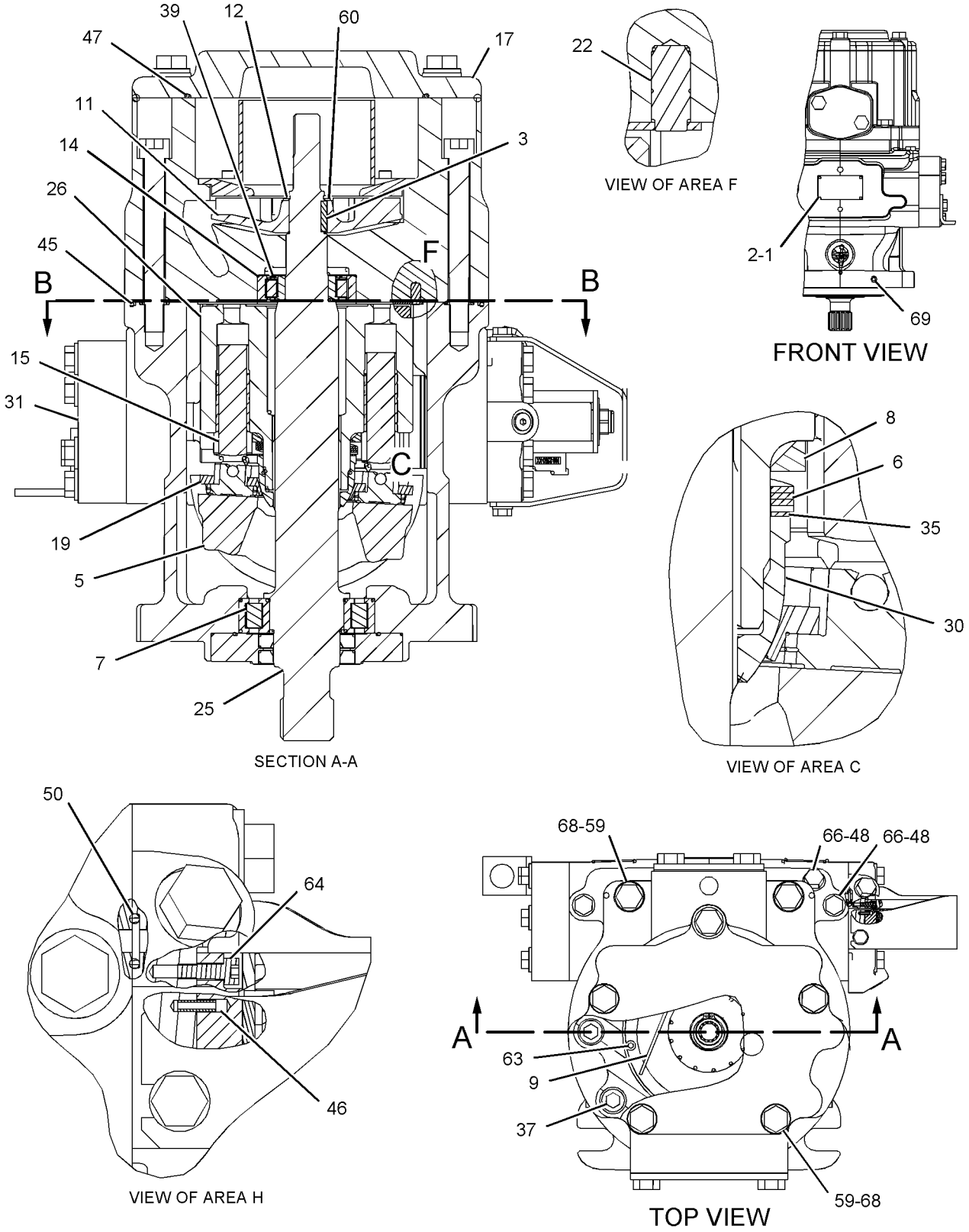

GRAPHIC #2 g01118058

216-8978 PUMP GP-PISTON *(contd.)* **i02573851**

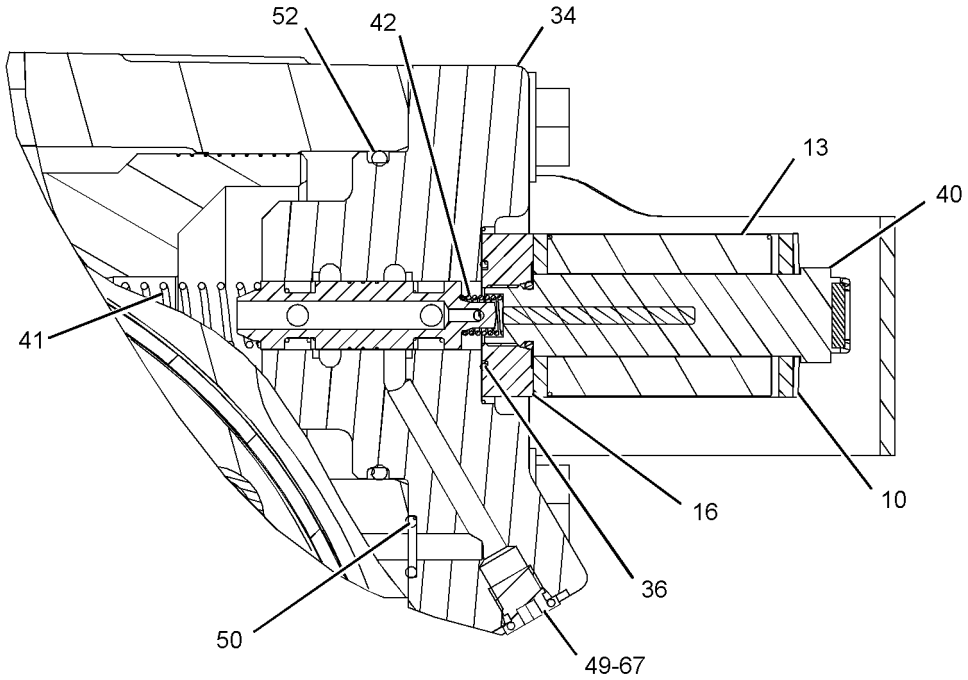

VIEW OF AREA E

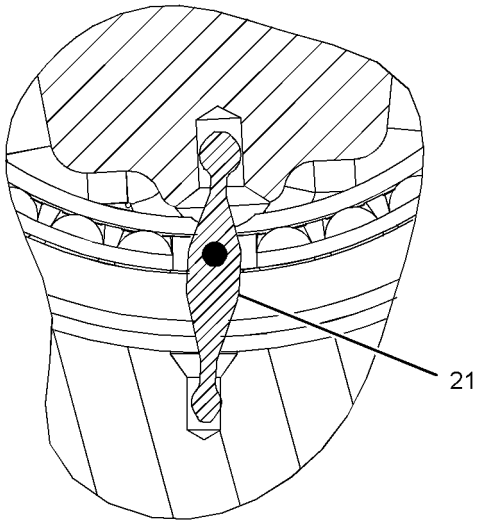

SECTION G-G

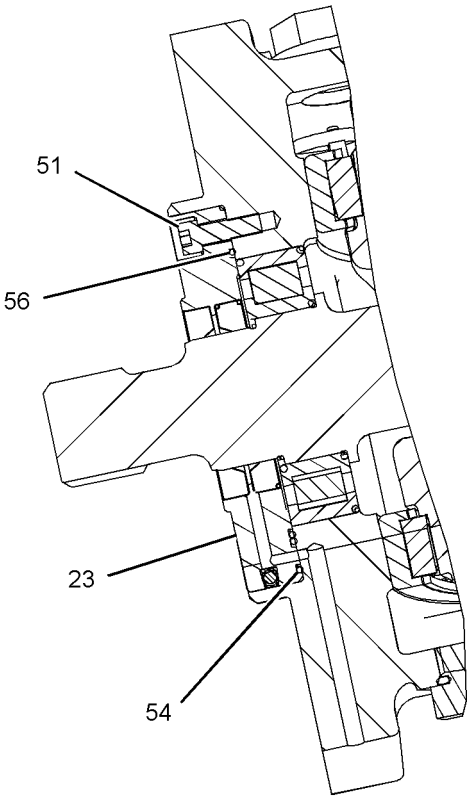

SECTION D-D

GRAPHIC #3 **<END>** g01126526

HYDRAULIC SYSTEM

228-3636 PUMP GP-PISTON—HYDRAULIC FAN*R

S/N: BXY1-UP

PART OF 228-0376 PUMP & MTG GP-HYDRAULIC FAN

AN ATTACHMENT

SMCS-5070 **i02387087**

NOTE	REF NO	GRAPHIC REF	PART NUMBER	QTY	PART NAME 1 2 3 4 5 6 (PRODUCT LEVEL)	SEE PAGE
	1	1	**233-0065**	1	SHAFT-DRIVE	
	2	1	**8C-3110**	1	RING-RETAINING	
	3	1	**166-0344**	1	SEAL-SHAFT	
	4	1	**9S-8006**	1	PLUG-O-RING	
	5	1	**2M-9780**	1	SEAL-O-RING	
	6	1	**127-9490**	1	SPRING (BIAS)	
	7	1	**168-2198**	1	LINK-CONTROL	
	8	1	**168-7861**	1	PISTON-ACTUATOR	
	9	1	**175-6799**	1	PLUG-CONTROL	
	10	1	**8T-7525**	1	SEAL-O-RING	
	11	1	**083-4419**	1	PIN	
	12	1	**168-3504**	1	SEAL	
	13	1	**136-8423**	1	PLUG-BREAK OFF	
M	14	1	**095-0670**	4	BOLT (M12X1.75X45-MM)	
	15	1	**105-3035**	1	CONE-BEARING	
	16	1	**203-8609**	1	CUP-BEARING	
	17	1	**127-9485**	1	SEAL-O-RING	
B	18	1	**127-9483**	1	SHIM (PRELOAD)	
Y	19	1	**168-7868**	1	ROTATING GP-PUMP (HYDRAULIC FAN)	1560
	20	1	**175-6795**	1	SWASHPLATE	
	21	1	**168-7869**	2	BEARING-CRADLE	
	22	1	**203-9163**	1	CONE-BEARING	
	23	1	**6V-4636**	1	CUP-BEARING	
	24	1	**3J-7354**	1	SEAL-O-RING	
Y	25	1	**207-0695**	1	VALVE GP-PUMP CONTROL (PRESSURE, FLOW COMPENSATOR)	1638
	26	1	**9X-7680**	3	SEAL-O-RING	
M	27	1	**8T-8442**	4	BOLT-SOCKET HEAD (M6X1X30-MM)	
	28	1	**9S-8002**	1	PLUG-O-RING	

B-USE AS REQUIRED
M-METRIC PART
Y-SEPARATE ILLUSTRATION

228-3636 PUMP GP-PISTON *(contd.)* **i02387087**

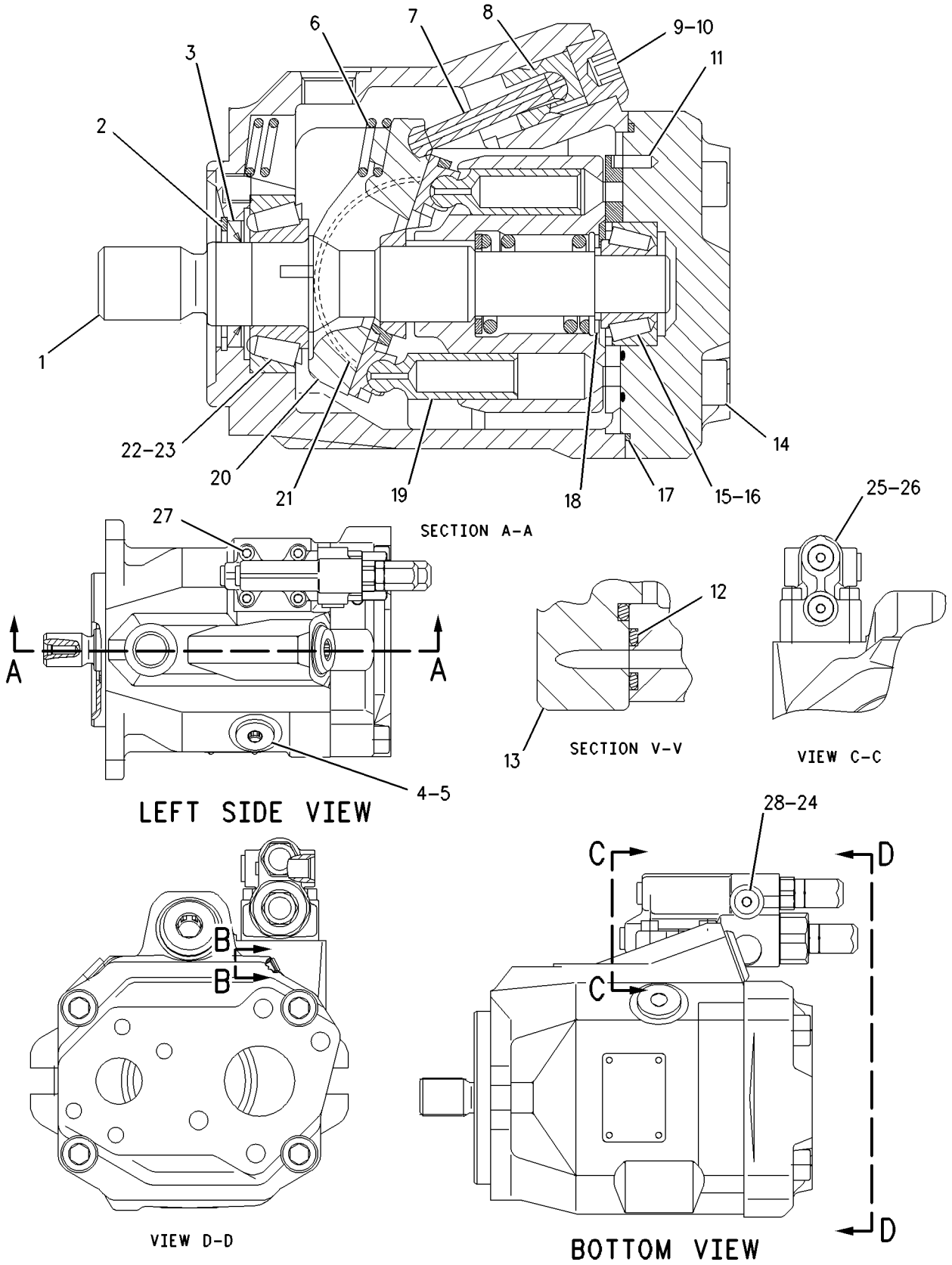

GRAPHIC #1 **<END>** g01004317

HYDRAULIC SYSTEM

228-3638 PUMP GP-PISTON—HYD FAN, HIGH AMBIENT TEMP

S/N: BXY1-UP

PART OF 226-1957 PUMP & MTG GP-HYDRAULIC FAN

AN ATTACHMENT

SMCS-5070 **i02578670**

NOTE	REF NO	GRAPHIC REF	PART NUMBER	QTY	PART NAME 1 2 3 4 5 6 (PRODUCT LEVEL)	SEE PAGE
	1	1	**233-0065**	1	SHAFT-DRIVE	
	2	1	**8C-3110**	1	RING-RETAINING	
	3	1	**166-0344**	1	SEAL-SHAFT	
	4	1	**9S-8006**	1	PLUG-O-RING	
	5	1	**2M-9780**	1	SEAL-O-RING	
	6	1	**127-9490**	1	SPRING (BIAS)	
	7	1	**168-2198**	1	LINK-CONTROL	
	8	1	**168-7861**	1	PISTON-ACTUATOR	
	9	1	**175-6799**	1	PLUG-CONTROL	
	10	1	**8T-7525**	1	SEAL-O-RING	
	11	1	**083-4419**	1	PIN	
	12	1	**168-3504**	1	SEAL	
	13	1	**136-8423**	1	PLUG-BREAK OFF	
M	14	1	**095-0670**	4	BOLT (M12X1.75X45-MM)	
	15	1	**105-3035**	1	CONE-BEARING	
	16	1	**203-8609**	1	CUP-BEARING	
	17	1	**127-9485**	1	SEAL-O-RING	
B	18	1	**127-9483**	1	SHIM (PRELOAD)	
Y	19	1	**168-7868**	1	ROTATING GP-PUMP (HYDRAULIC FAN)	1560
	20	1	**175-6795**	1	SWASHPLATE	
	21	1	**168-7869**	2	BEARING-CRADLE	
	22	1	**203-9163**	1	CONE-BEARING	
	23	1	**6V-4636**	1	CUP-BEARING	
	24	1	**3J-7354**	1	SEAL-O-RING	
Y	25	1	**207-0695**	1	VALVE GP-PUMP CONTROL (PRESSURE, FLOW COMPENSATOR)	1638
	26	1	**9X-7680**	3	SEAL-O-RING	
M	27	1	**8T-8442**	4	BOLT-SOCKET HEAD (M6X1X30-MM)	
	28	1	**9S-8002**	1	PLUG-O-RING	

B-USE AS REQUIRED
M-METRIC PART
Y-SEPARATE ILLUSTRATION

228-3638 PUMP GP-PISTON *(contd.)* **i02578670**

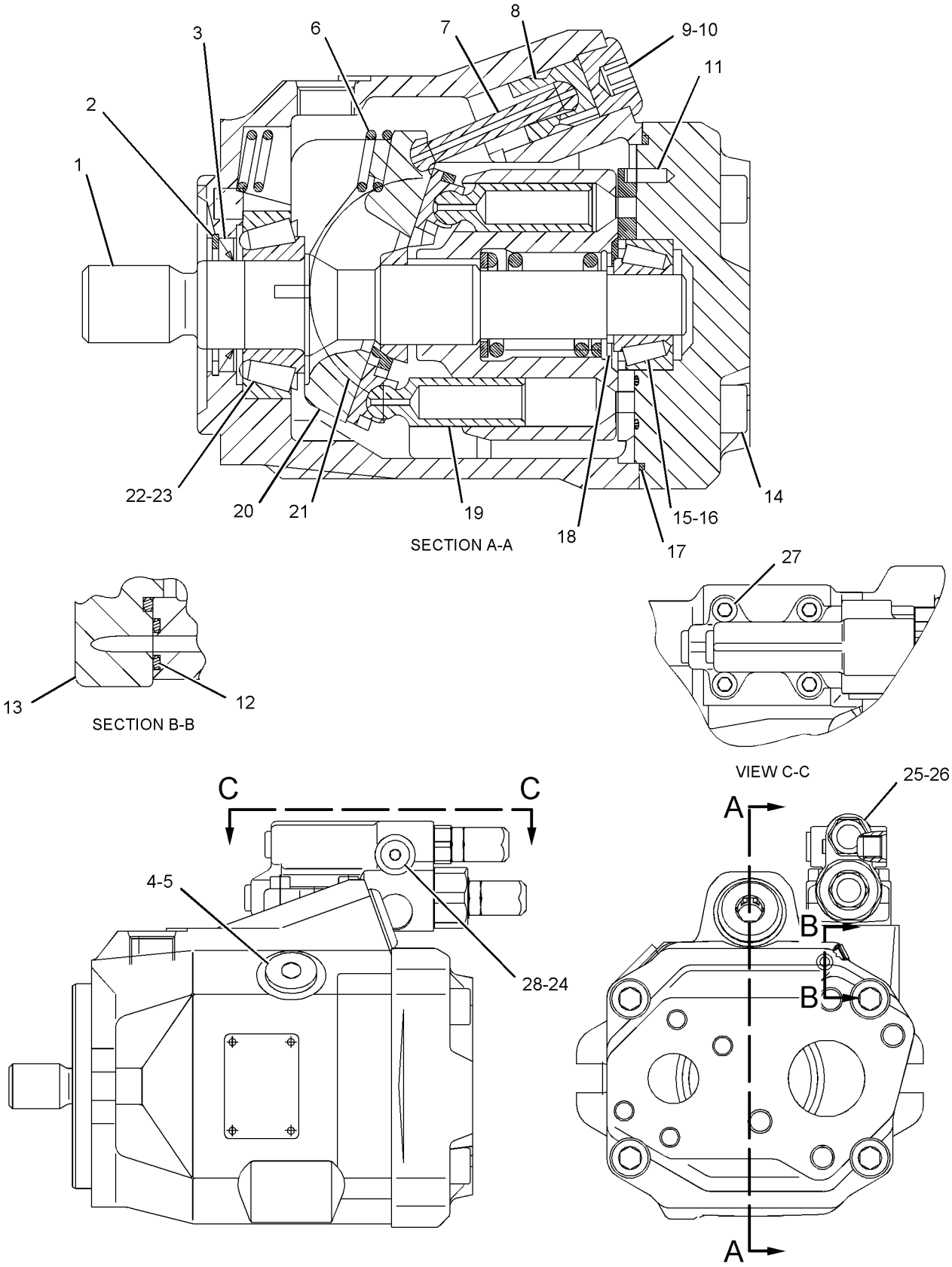

GRAPHIC #1 **<END>** g01102182

HYDRAULIC SYSTEM

346-6095 PUMP GP-PISTON

S/N: BXY4000-UP

PART OF 345-3933 PUMP & MTG GP-IMPLEMENT

SMCS-5070 **i03754497**

NOTE	REF NO	GRAPHIC REF	PART NUMBER	QTY	PART NAME 1 2 3 4 5 6 (PRODUCT LEVEL)	SEE PAGE
	1	1	**9X-8268**	7	WASHER (17.5X30X3.5-MM THK)	
	2	2	**7Y-4224**	1	ORIFICE	
	4	1	**006-0136**	1	KEY	
	5	1	**110-2973**	2	BEARING-SPECIAL ROLLER	
B	6	1	**110-3978**	1	SPRING-WAVE	
	7	1	**118-5805**	1	BEARING-SPECIAL RACE	
	8	1	**137-5646**	1	SPACER (70.4X87.5X7.6-MM THK)	
L	9	1	**142-0149**	1	SPACER (70.75X80X1.07-MM THK)	
	10	1	**143-2006**	1	COVER AS	
	11	1	**143-7319**	1	RACE-ROLLER BEARING	
	12	1	**146-8990**	1	IMPELLER	
	13	1	**146-8991**	1	SPACER (29X38X1.57-MM THK)	
	14	1	**148-3548**	1	BEARING	
	15	1	**150-4355**	9	PISTON AS	
	16	2	**155-2251**	1	PLATE	
	17	1	**155-4326**	1	COVER	
	18	2	**158-3504**	1	SPOOL-CONTROL	
	19	1	**159-7320**	1	PLATE-RETAINER	
	20	1	**165-6062**	2	LINK	
	21	1	**175-7887**	2	DOWEL	
	22	2	**177-1405**	1	SPRING	
	23	1	**185-3889**	1	SHAFT	
	24	1	**187-9116**	1	BARREL AS-PUMP	
	25	2	**191-9247**	1	WASHER (19.15X31.65X2.36-MM THK)	
	26	2	**198-2914**	1	NUT (3/4-32-THD)	
	27	1	**214-2445**	1	SPRING	
	28	1	**214-6489**	1	BALL	
	29	1	**250-9328**	1	COVER	
	30	1	**251-7828**	1	PLATE-PORT	
	31	1	**252-4537**	1	HEAD-PUMP	
	32	2	**263-7732**	1	HOUSING AS	
		2	**124-1555**	1	PLUG	
	33	2	**264-0010**	1	RETAINER	
	34	2	**267-3741**	1	ACTUATOR	
	35	1	**267-3743**	1	BODY AS-PUMP	
		1	**124-1555**	1	PLUG	
BN	36	2	**270-7898**	1	SPRING	
	37	2	**308-2613**	1	BRACKET AS	
	38	1	**313-1284**	1	RETAINER AS	
		1	**6V-3382**	2	SEAL-LIP TYPE	
		1	**124-1555**	1	PLUG	
	39	1	**314-3243**	1	SWASHPLATE	
	40	2	**316-1438**	1	CARTRIDGE AS	
		2	**214-7568**	2	SEAL-O-RING	
	41	2	**322-2018**	1	SLIDE-ACTUATOR	
	42	2	**326-5212**	1	COIL AS	
J	43	2	**030-4605**	1	SEAL-O-RING	
M	44	1	**096-0008**	6	BOLT-SOCKET HEAD (M16X2X140-MM)	
M	45	2	**162-2165**	4	BOLT-SOCKET HEAD (M4X0.7X16-MM)	
J	46	1	**189-9763**	1	SEAL-O-RING	
J	47	1	**1P-3709**	1	SEAL-RECTANGULAR	
	48	1	**2A-3630**	2	PIN	
J	49	1	**2R-0239**	1	SEAL-O-RING	
	50	2	**3C-8388**	2	PIN-ROLL	
	51	1	**3D-4603**	1	PLUG-PIPE	
J	52	1	**3J-0634**	1	SEAL-O-RING	

346-6095 PUMP GP-PISTON *(contd.)* i03754497

NOTE	REF NO	GRAPHIC REF	PART NUMBER	QTY	PART NAME 1 2 3 4 5 6 (PRODUCT LEVEL)	SEE PAGE
	53	1,2	**3J-1907**	3	SEAL-O-RING	
J	54	2	**3J-7354**	1	SEAL-O-RING	
J	55	1,2	**4J-5309**	3	SEAL-O-RING	
M	56	1	**5A-3604**	3	BOLT-SOCKET HEAD (M8X1.25X25-MM)	
	57	2	**5P-8245**	6	WASHER-HARD (13.5X25.5X3-MM THK)	
	58	1	**6F-7061**	2	DOWEL	
	59	2	**6J-2680**	1	SEAL-O-RING	
J	60	1	**6S-3002**	1	SEAL-O-RING	
M	61	1	**6V-3823**	6	BOLT (M12X1.75X60-MM)	
M	62	2	**6V-5215**	3	BOLT (M8X1.25X16-MM)	
M	63	2	**6V-5684**	6	BOLT (M12X1.75X45-MM)	
M	64	1	**6V-5686**	7	BOLT (M16X2X50-MM)	
	65	1	**6V-8243**	1	RING-RETAINING	
J	66	1	**7F-8607**	6	SEAL-O-RING	
J	67	1,2	**7M-8485**	4	SEAL-O-RING	
M	68	1	**8T-0267**	5	BOLT-SOCKET HEAD (M6X1X12-MM)	
	69	2	**9M-1974**	3	WASHER-HARD (8.8X16X2-MM THK)	
	70	1,2	**9S-4181**	4	PLUG-O-RING	
	71	1,2	**9S-4191**	3	PLUG-O-RING	
	72	2	**9S-8002**	1	PLUG-O-RING	
					AVAILABLE REPAIR KIT(S):	
J			**185-5352**	1	KIT-SEAL	
					(INCLUDES SEAL-O-RINGS, SEAL-RECTANGULAR & SEAL-LIP TYPES)	
L			**185-5354**	1	KIT-SPACER	
					(INCLUDES SPACERS)	
N			**338-1105**	1	KIT-SPRING	
					(INCLUDES SPRINGS)	

B-USE AS REQUIRED
J-KIT MARKED J INCLUDES PARTS MARKED J
L-KIT MARKED L INCLUDES PART MARKED L
M-METRIC PART
N-KIT MARKED N INCLUDES PART MARKED N

346-6095 PUMP GP-PISTON *(contd.)* **i03754497**

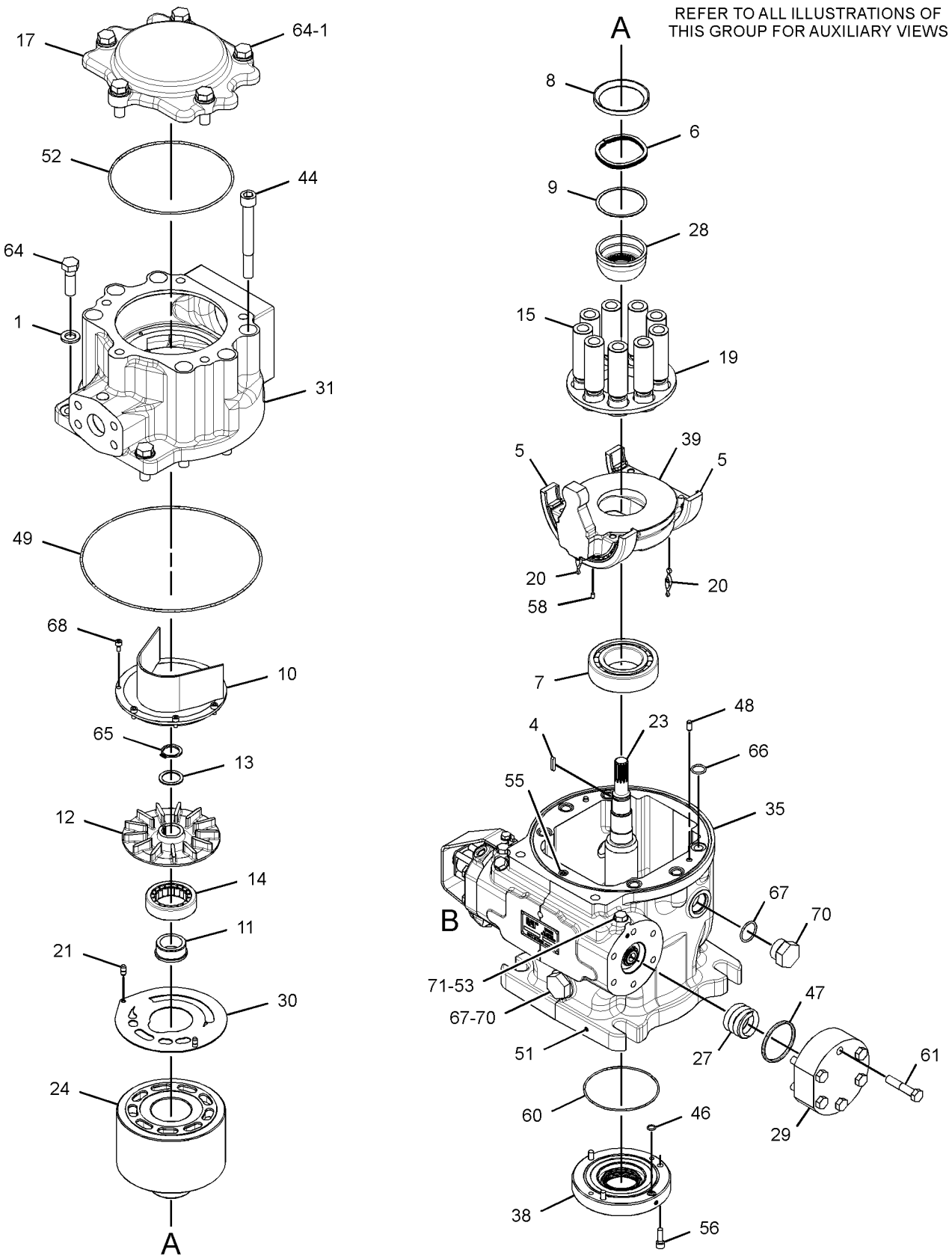

GRAPHIC #1 g02058693

346-6095 PUMP GP-PISTON *(contd.)* **i03754497**

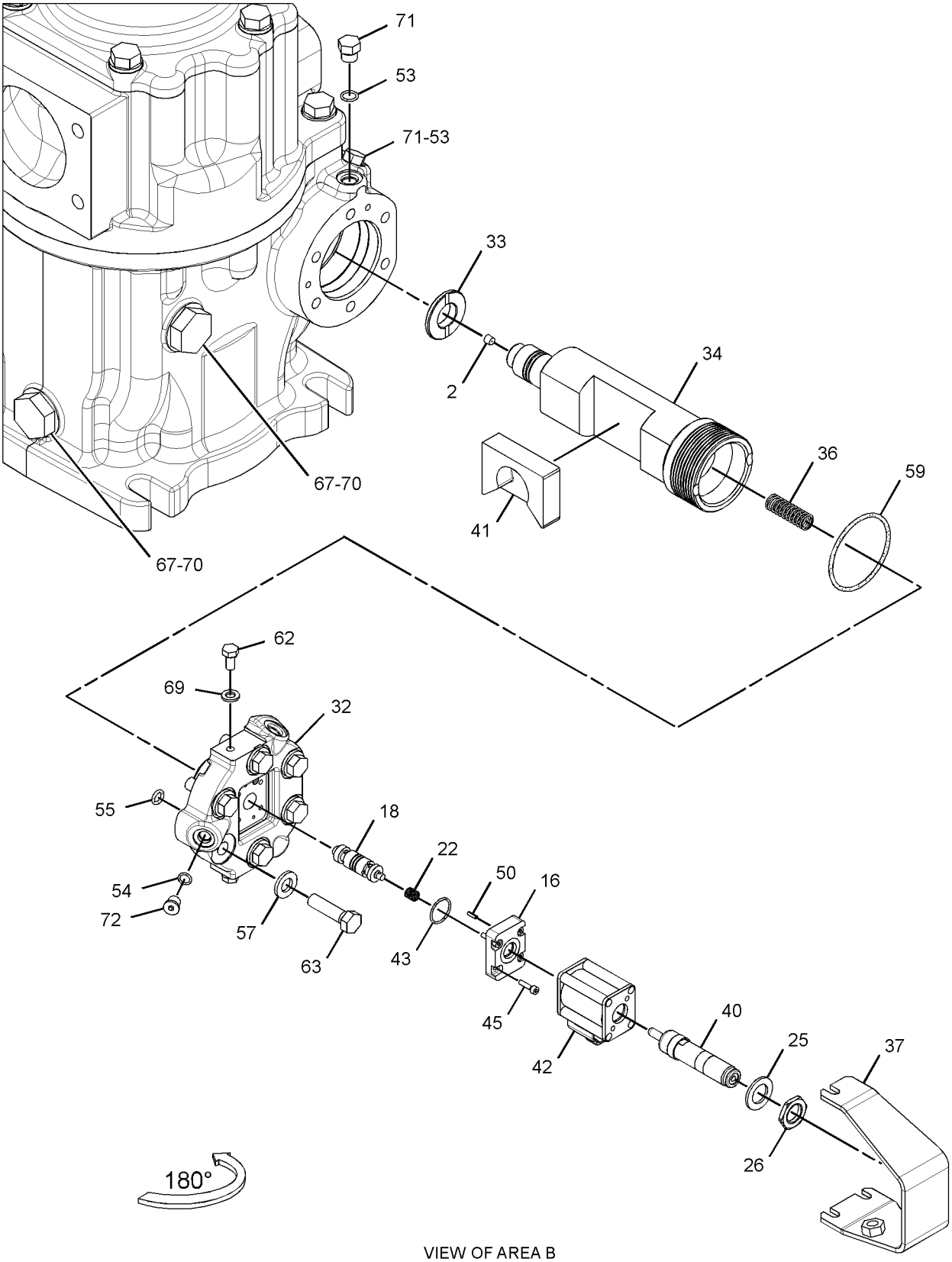

VIEW OF AREA B
(EXPLODED)

GRAPHIC #2 **<END>** g02059333

HYDRAULIC SYSTEM

185-0275 ROTATING GP-MOTOR—HYDRAULIC FAN

S/N: BXY1-UP

PART OF 213-5268 MOTOR GP-PISTON

SMCS-1386, 5058 **i02023021**

NOTE	REF NO	GRAPHIC REF	PART NUMBER	QTY	PART NAME 1 2 3 4 5 6 (PRODUCT LEVEL)	SEE PAGE
	1	1	**168-3379**	3	PIN	
	2	1	**168-3382**	1	WASHER (42-MM ODX2.7-MM THK)	
	3	1	**185-0292**	1	SPRING	
	4	1	**6V-7723**	1	RING-RETAINING	
	5	1	**185-0287**	1	PLATE-VALVE	
	6	1	**185-0289**	1	BARREL	
	7	1	**168-3384**	9	PISTON AS-PUMP	
	8	1	**168-3378**	1	BEARING-SPHERICAL	
	9	1	**168-3385**	1	PLATE-RETRACTION	

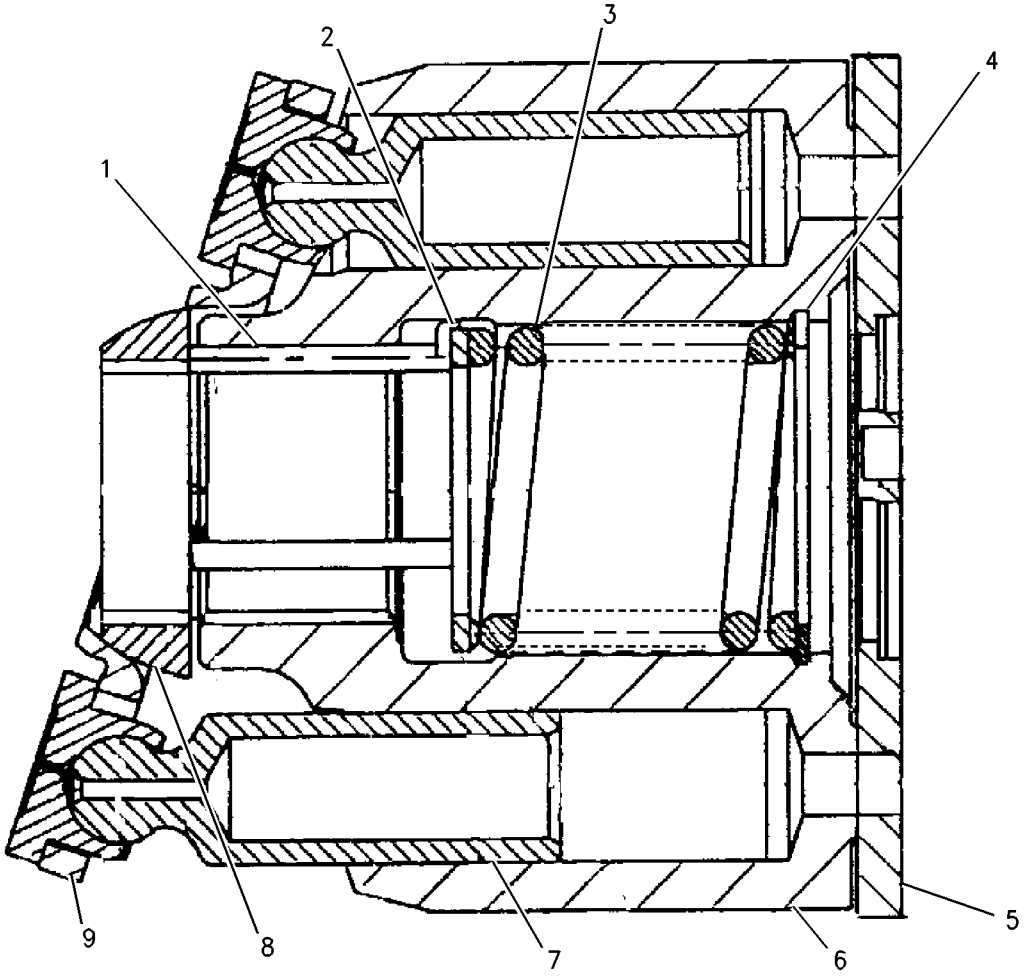

GRAPHIC #1 **<END>** g00790134

HYDRAULIC SYSTEM

168-7868 ROTATING GP-PUMP—HYDRAULIC FAN

S/N: BXY1-UP

PART OF 228-3636, 228-3638 PUMP GP-PISTON

AN ATTACHMENT

SMCS-1387, 5070, 5084 **i02216714**

NOTE	REF NO	GRAPHIC REF	PART NUMBER	QTY	PART NAME 1 2 3 4 5 6 (PRODUCT LEVEL)	SEE PAGE
	1	1	**138-8175**	1	BEARING-TAPERED ROLLER	
	2	1	**168-7940**	3	PIN	
	3	1	**096-0015**	1	RING-RETAINING	
	4	1	**233-0455**	1	BARREL	
	5	1	**168-7941**	1	SPRING	
	6	1	**168-7942**	1	WASHER (36.5-MM ODX2.0-MM THK)	
	7	1	**168-7943**	9	PISTON AS	
	8	1	**168-7944**	1	PLATE-RETRACTION	
	9	1	**138-8173**	1	PLATE-VALVE	

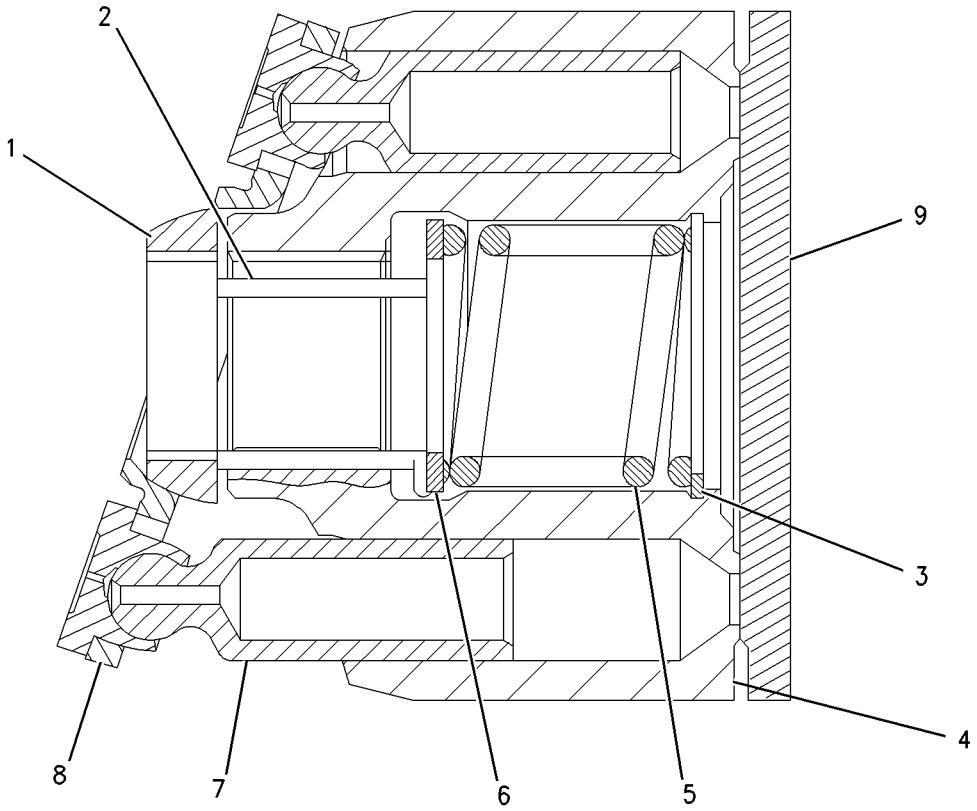

GRAPHIC #1 **<END>** g00760776

HYDRAULIC SYSTEM

132-6143 TANK & MTG GP-HYDRAULIC

S/N: BXY1-UP

PART OF 225-5449, 298-2038, 345-3930 HYDRAULIC AR

SMCS-5056 **i01280380**

NOTE	REF NO	GRAPHIC REF	PART NUMBER	QTY	PART NAME 1 2 3 4 5 6 (PRODUCT LEVEL)	SEE PAGE
Y	1	1	*9G-9288*	1	CAP GP-PROTECTION	2062
	2	1	**9T-0818**	1	VALVE-BREAKER RELIEF	
	3	1	**138-7496**	2	BRACKET AS	
	4	1	**138-7497**	1	BRACKET AS	
Y	5	1	*153-3602*	1	TANK GP-HYDRAULIC	1566
	6	1	**158-8033**	1	BRACKET AS	
	7	1	**3D-2824**	1	SEAL-O-RING	
M	8	1	**7X-2563**	20	BOLT (M20X2.5X60-MM)	
	9	1	**8T-5439**	20	WASHER-HARD (21.5X45X6-MM THK)	

M-METRIC PART
Y-SEPARATE ILLUSTRATION

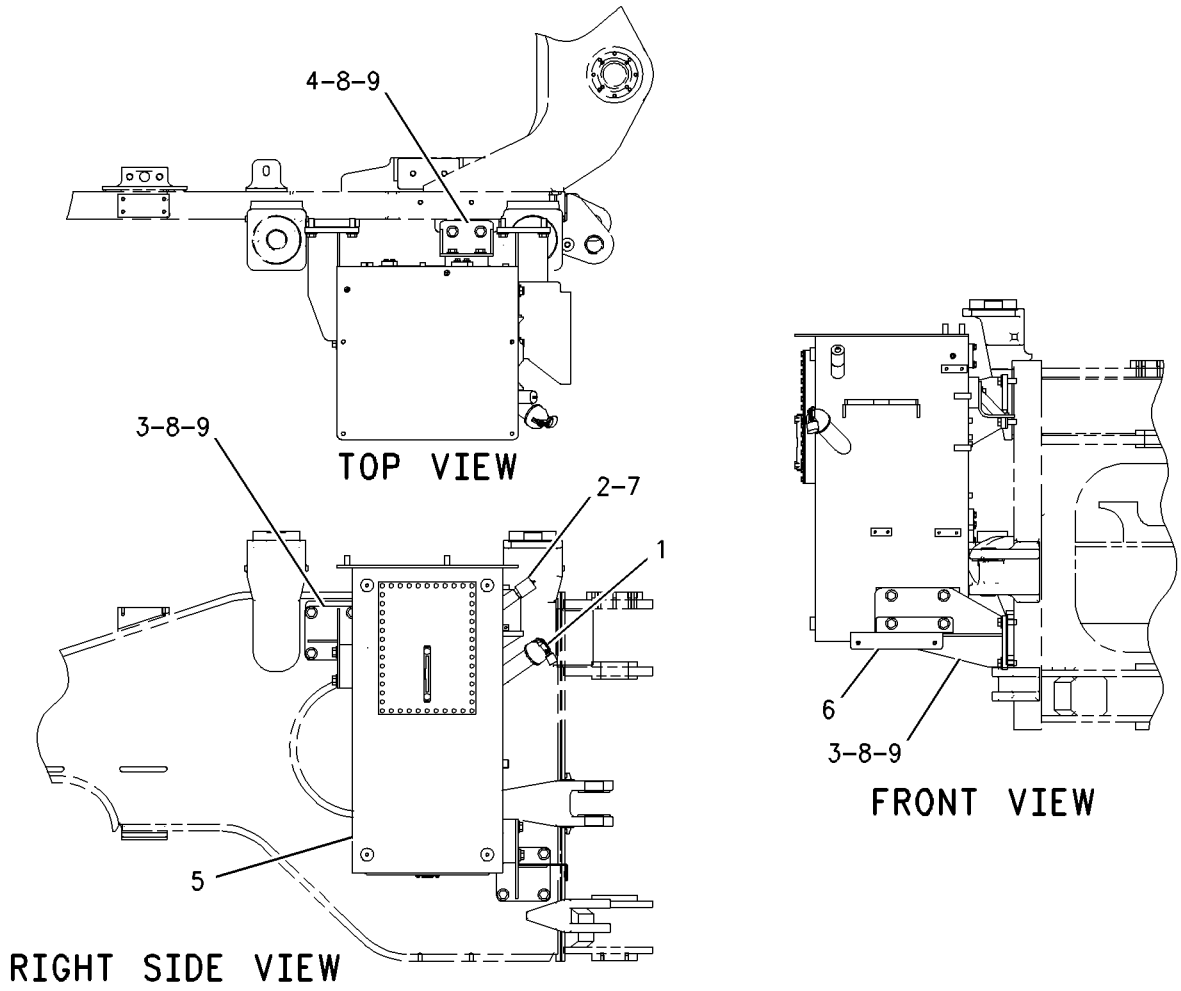

GRAPHIC #1 **<END>** g00678987

221-6807 TANK AR-EXPANSION–AIR

S/N: BXY1-UP

CANNOT BE USED WITH 221-6808–PAGE 1562, 164-6085–PAGE 979

AN ATTACHMENT

SMCS-5505 **i02243415**

NOTE	PART NUMBER	QTY	PART NAME 1 2 3 4 5 6 (PRODUCT LEVEL)	SEE PAGE
Y	*221-4201*	1	TANK GP-EXPANSION (AIR)	1564
	221-5470	1	HANDRAIL AS	
	161-8900	1	CONNECTOR	
	161-9901	1	SNAP	
	220-6079	1	CHAIN	
	221-5471	1	HANDRAIL AS	
	221-5459	1	PANEL AS	

Y-SEPARATE ILLUSTRATION

<END>

221-6808 TANK AR-EXPANSION–AIR

S/N: BXY1-2809

CANNOT BE USED WITH 164-6084 LADDER & FENDER AR

AN ATTACHMENT

SMCS-5505 **i01728108**

NOTE	PART NUMBER	QTY	PART NAME 1 2 3 4 5 6 (PRODUCT LEVEL)	SEE PAGE
	221-5472	1	HANDRAIL AS	
Y	*221-4201*	1	TANK GP-EXPANSION (AIR)	1564

Y-SEPARATE ILLUSTRATION

<END>

HYDRAULIC SYSTEM

221-6808 TANK AR-EXPANSION—AIR

S/N: BXY2810-UP

CANNOT BE USED WITH 164-6084 LADDER & FENDER AR

AN ATTACHMENT

SMCS-5505 **i03463058**

NOTE	REF NO	GRAPHIC REF	PART NUMBER	QTY	PART NAME 1 2 3 4 5 6 (PRODUCT LEVEL)	SEE PAGE
Y	1	1	*221-4201*	1	TANK GP-EXPANSION (AIR)	1564
C	2	1	**338-0915**	1	HANDRAIL AS	
CM	3	1	**8T-4195**	4	BOLT (M10X1.5X30-MM)	
C	4	1	**8T-4121**	4	WASHER-HARD (11X21X2.5-MM THK)	

C-CHANGE FROM PREVIOUS TYPE
M-METRIC PART
Y-SEPARATE ILLUSTRATION

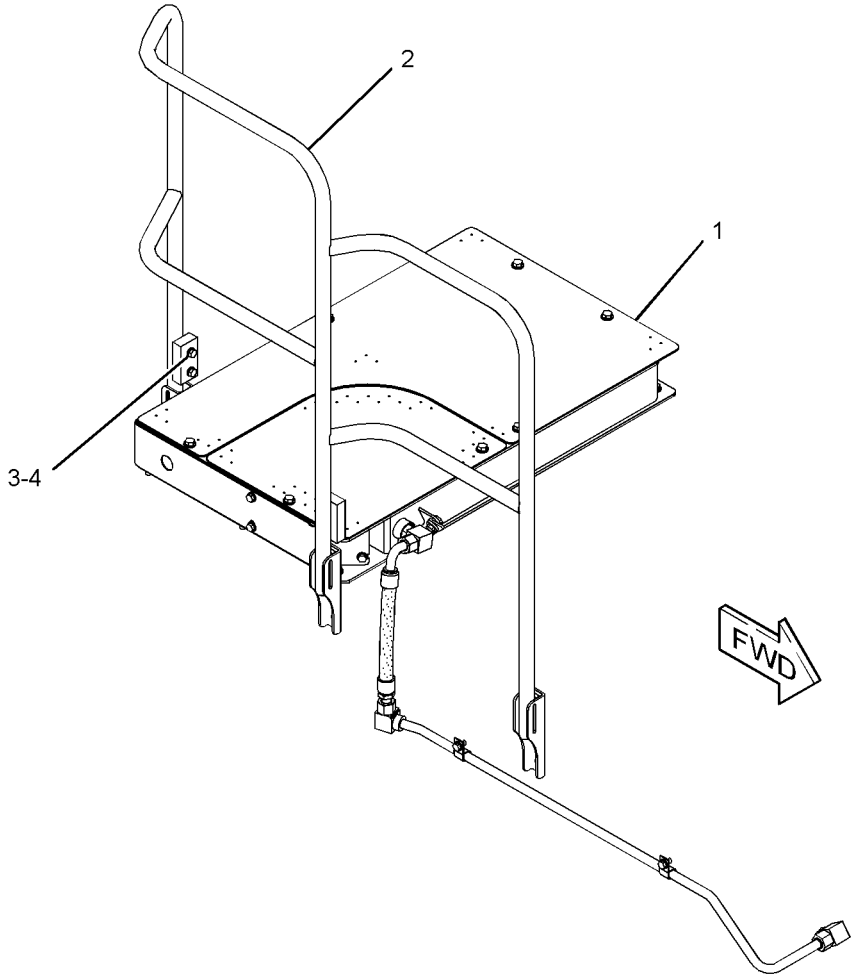

GRAPHIC #1 **<END>** g01830480

HYDRAULIC SYSTEM

221-4201 TANK GP-EXPANSION—AIR

S/N: BXY1-UP

PART OF 221-6807, 221-6808 TANK AR-EXPANSION

AN ATTACHMENT

SMCS-5505 **i03775473**

NOTE	REF NO	GRAPHIC REF	PART NUMBER	QTY	PART NAME 1 2 3 4 5 6 (PRODUCT LEVEL)	SEE PAGE
	1	1	**220-2948**	1	TANK AS-EXPANSION	
		1	**7J-5225**	2	FITTING (1-1/16-12-THD)	
M		1	**8T-3490**	1	NUT-WELD (M10X1.5-THD)	
		1	**087-5841**	1	PLATE	
		1	**090-8247**	4	BLOCK	
		1	**272-5605**	1	BRACKET	
	2	1	**221-3440**	1	TUBE AS	
I	3	1	**221-3481**	1	HOSE AS	
	4	1	**221-4015**	1	SHEET	
C	5	1	**236-1059**	1	PLATE	
C	6	1	**236-1239**	1	PLATE	
	7	1	**272-5606**	1	CAM	
	8	1	*148-8347*	2	ELBOW AS	
					(EACH INCLUDES)	
		1	**3D-2824**	1	SEAL-O-RING	
		1	**6V-9007**	1	ELBOW	
		1	**6V-9746**	1	SEAL-O-RING	
	9	1	**220-0812**	1	VALVE-BREAKER RELIEF	
	10	1	**3D-2824**	1	SEAL-O-RING	
	11	1	**6D-4246**	2	CLIP	
	12	1	**6V-9746**	1	SEAL-O-RING	
	13	1	**8T-2561**	1	WASHER-HARD (10.5X28.5X5-MM THK)	
	14	1	**8T-4121**	7	WASHER-HARD (11X21X2.5-MM THK)	
M	15	1	**8T-4137**	7	BOLT (M10X1.5X20-MM)	
CM	16	1	**8T-4139**	14	BOLT (M12X1.75X30-MM)	
C	17	1	**8T-4223**	14	WASHER-HARD (13.5X25.5X3-MM THK)	
M	18	1	**9X-2125**	1	BOLT-LOCKING (M10X1.5X25-MM)	

C-CHANGE FROM PREVIOUS TYPE
I-REFER TO HYDRAULIC INFORMATION SYSTEM
M-METRIC PART

221-4201 **TANK GP-EXPANSION** *(contd.)* **i03775473**

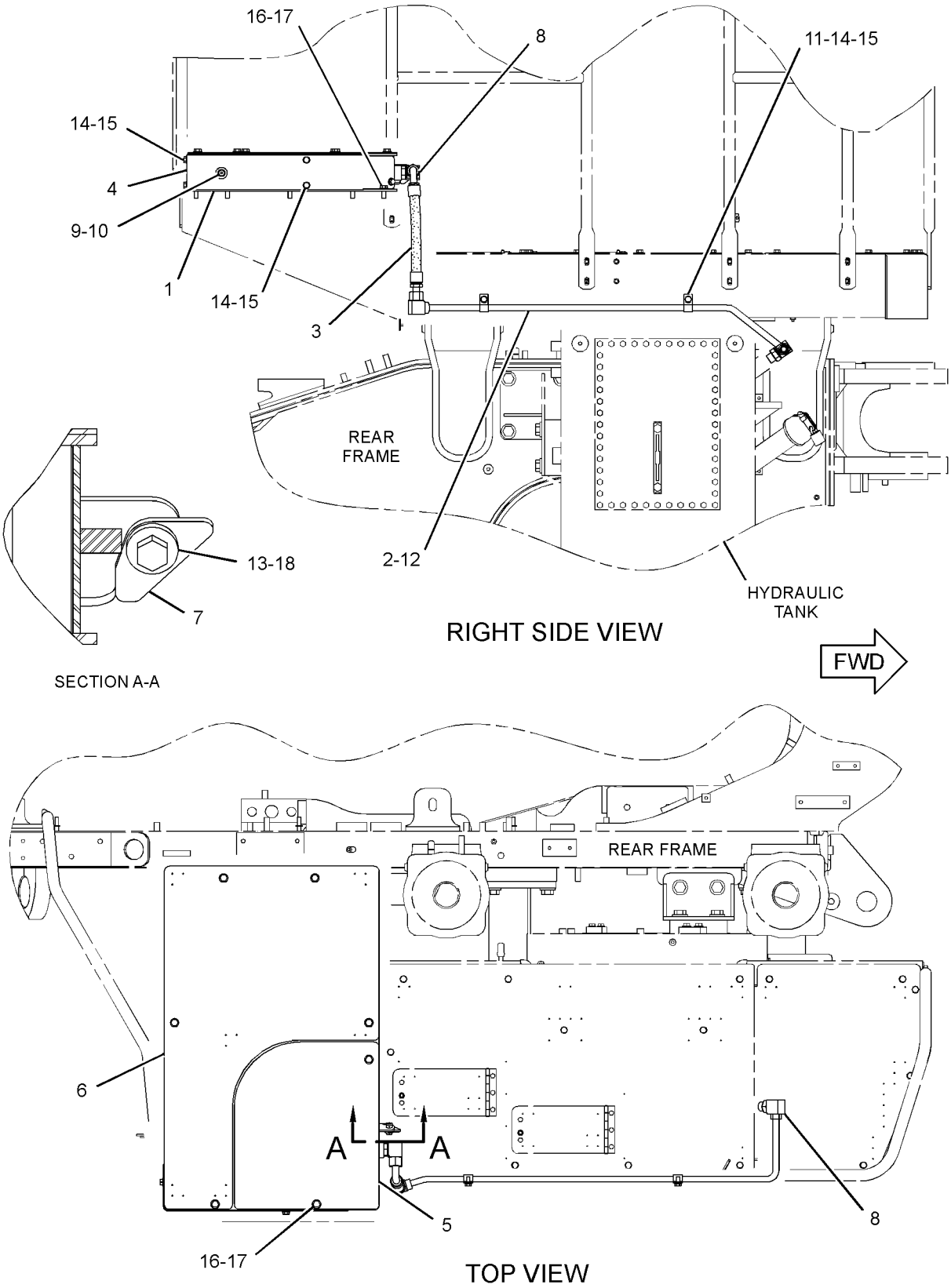

GRAPHIC #1 **<END>** g01231629

HYDRAULIC SYSTEM

153-3602 TANK GP-HYDRAULIC

S/N: BXY1-UP

PART OF 132-6143 TANK & MTG GP-HYDRAULIC

SMCS-5056 **i02735705**

NOTE	REF NO	GRAPHIC REF	PART NUMBER	QTY	PART NAME 1 2 3 4 5 6 (PRODUCT LEVEL)	SEE PAGE
	1	2	**1U-2827**	1	GUIDE-VALVE	
	2	2	**2D-4202**	1	PLATE	
	3	1	**6E-6550**	1	GAUGE AS-LIQUID LEVEL	
		1	**8F-3469**	4	SEAL-O-RING	
		1	**121-7958**	2	BOLT-MOUNTING (1/2-20X1.75-IN)	
	4	2	**7B-3039**	1	SPRING	
	5	2	**7H-1447**	1	CAP-FILLER (HYDRAULIC TANK)	
	6	2	**7J-2656**	3	SCREEN GP	
	7	2	**8J-8782**	1	BODY-DRAIN VALVE	
	8	2	**8J-8783**	1	VALVE	
	9	2	**8T-3298**	1	SEAL-RECTANGULAR	
	10	2	**9J-3047**	1	STRAINER	
	11	2	**9J-7031**	1	PLUG-DRAIN	
	12	2	**9T-9226**	2	PLATE	
	13	2	**9T-9227**	2	SCREEN AS	
	14	2	**138-3909**	1	COVER AS	
	15	2	**142-0203**	1	TUBE AS	
	16	1	**153-9063**	1	TANK AS	
	17	2	**153-9784**	1	TUBE AS	
	18	2	**154-0930**	3	TUBE AS	
	19	1	**177-0093**	1	COVER AS	
		1	**6B-6684**	2	NUT-FULL (1/2-20-THD)	
	20	1	**178-0182**	1	SCREEN-DIFFUSER	
	21	1	**304-9540**	1	GASKET	
	22	2	**1H-9696**	4	SEAL-O-RING	
	23	1	**1P-4579**	4	FLANGE-HALF	
	24	1	**1P-4582**	2	FLANGE-HALF	
	25	2	**1U-1570**	1	TUBE	
	26	2	**3G-0361**	1	GASKET	
	27	1	**3V-9862**	2	SPACER	
	28	2	**4J-0527**	1	SEAL-O-RING	
	29	2	**4M-0189**	1	SEAL-O-RING	
	30	2	**4T-8698**	3	WASHER (12.2X62X3.5-MM THK)	
	31	2	**5M-2057**	1	SEAL-O-RING	
	32	2	**5P-8245**	4	WASHER-HARD (13.5X25.5X3-MM THK)	
	33	1	**6V-5839**	2	WASHER (11X21X2.5-MM THK)	
M	34	1,2	**6V-7744**	9	LOCKNUT (M10X1.5-THD)	
	35	1	**8C-3206**	2	FLANGE-HALF	
M	36	2	**8T-0558**	2	BOLT-SELF-LOCKING (M12X1.75X100-MM)	
M	37	2	**8T-0722**	8	BOLT-LOCKING (M10X1.5X30-MM)	
	38	2	**8T-2275**	1	BALL	
	39	1,2	**8T-4121**	57	WASHER-HARD (11X21X2.5-MM THK)	
M	40	1,2	**8T-4137**	51	BOLT (M10X1.5X20-MM)	
M	41	1	**8T-4183**	12	BOLT (M12X1.75X40-MM)	
M	42	1	**8T-4196**	4	BOLT (M10X1.5X35-MM)	
	43	1	**8T-4223**	12	WASHER-HARD (13.5X25.5X3-MM THK)	
	44	2	**9H-6454**	1	GASKET	

M-METRIC PART

153-3602 **TANK GP-HYDRAULIC** *(contd.)* **i02735705**

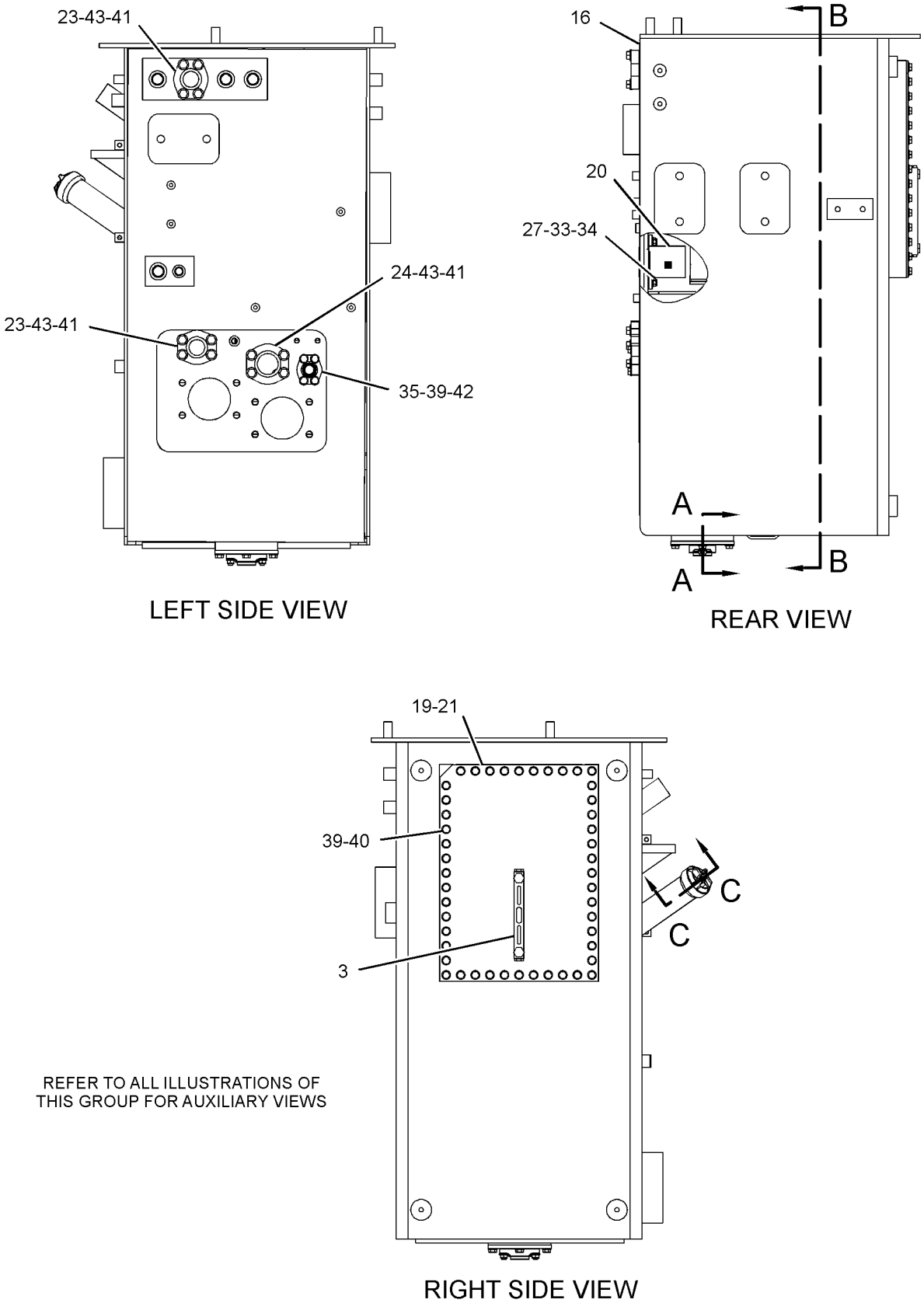

GRAPHIC #1 g01362711

153-3602 **TANK GP-HYDRAULIC** *(contd.)* **i02735705**

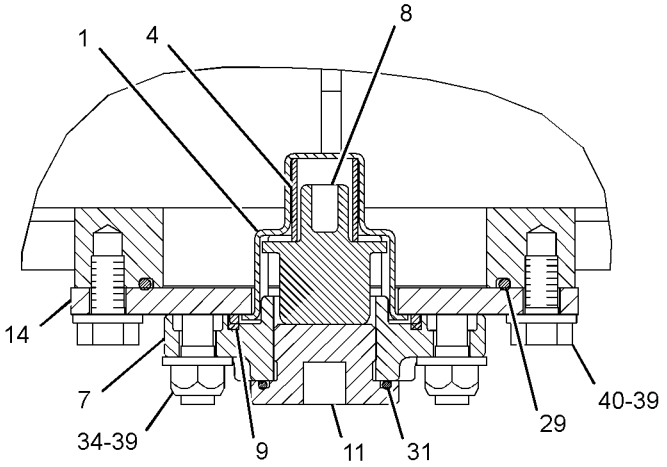

SECTION A-A

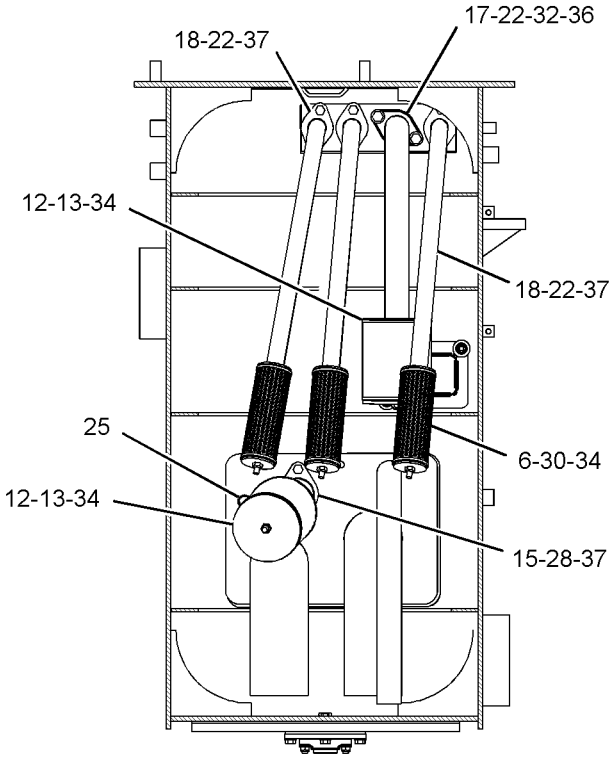

SECTION B-B

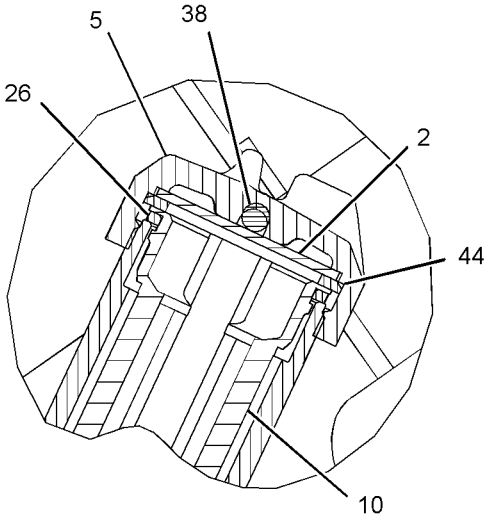

SECTION C-C

GRAPHIC #2 **<END>** g01362712

HYDRAULIC SYSTEM

204-6287 TANK GP-HYDRAULIC

S/N: BXY1900-UP
PART OF 308-2730 GUARD GP-REAR
AN ATTACHMENT

SMCS-5056 **i02933542**

NOTE	REF NO	GRAPHIC REF	PART NUMBER	QTY	PART NAME 1 2 3 4 5 6 (PRODUCT LEVEL)	SEE PAGE
	1	2	**1U-2827**	1	GUIDE-VALVE	
	2	1	**2D-4202**	1	PLATE	
	3	2	**6E-6550**	1	GAUGE AS-LIQUID LEVEL	
		2	**8F-3469**	4	SEAL-O-RING	
		2	**121-7958**	2	BOLT-MOUNTING (1/2-20X1.75-IN)	
	4	2	**7B-3039**	1	SPRING	
	5	1	**7H-1447**	1	CAP-FILLER (HYDRAULIC TANK)	
	6	2	**7J-2656**	3	SCREEN GP	
	7	2	**8J-8782**	1	BODY-DRAIN VALVE	
	8	2	**8J-8783**	1	VALVE	
	9	2	**8T-3298**	1	SEAL-RECTANGULAR	
	10	1	**9J-3047**	1	STRAINER (HYDRAULIC TANK FILL)	
	11	2	**9J-7031**	1	PLUG-DRAIN (HYDRAULIC TANK)	
	12	2	**9T-9226**	2	PLATE	
	13	2	**9T-9227**	2	SCREEN AS	
	14	2	**138-3909**	1	COVER AS	
	15	2	**142-0203**	1	TUBE AS	
	16	2	**153-9784**	1	TUBE AS	
	17	2	**154-0930**	3	TUBE AS	
	18	2	**177-0093**	1	COVER AS	
	19	2	**178-0182**	1	SCREEN-DIFFUSER	
	20	2	**204-6286**	1	TANK AS-HYDRAULIC	
	21	2	**304-9540**	1	GASKET	
	22	2	**1H-9696**	4	SEAL-O-RING	
	23	1	**1P-4579**	4	FLANGE-HALF	
	24	1	**1P-4582**	2	FLANGE-HALF	
	25	2	**1U-1570**	1	TUBE	
	26	1	**3G-0361**	1	GASKET	
	27	2	**3V-9862**	2	SPACER	
	28	2	**4J-0527**	1	SEAL-O-RING	
	29	2	**4M-0189**	1	SEAL-O-RING	
	30	2	**4T-8698**	3	WASHER (12.2X62X3.5-MM THK)	
	31	2	**5M-2057**	1	SEAL-O-RING	
	32	2	**5P-8245**	2	WASHER-HARD (13.5X25.5X3-MM THK)	
	33	2	**6V-5839**	2	WASHER (11X21X2.5-MM THK)	
M	34	2	**6V-7744**	9	LOCKNUT (M10X1.5-THD)	
	35	1	**8C-3206**	2	FLANGE-HALF	
M	36	2	**8T-0558**	2	BOLT-SELF-LOCKING (M12X1.75X100-MM)	
M	37	2	**8T-0722**	8	BOLT-LOCKING (M10X1.5X30-MM)	
	38	1	**8T-2275**	1	BALL	
	39	1,2	**8T-4121**	57	WASHER-HARD (11X21X2.5-MM THK)	
M	40	2	**8T-4137**	51	BOLT (M10X1.5X20-MM)	
M	41	1	**8T-4183**	12	BOLT (M12X1.75X40-MM)	
M	42	1	**8T-4196**	4	BOLT (M10X1.5X35-MM)	
	43	1	**8T-4223**	12	WASHER-HARD (13.5X25.5X3-MM THK)	
	44	1	**9H-6454**	1	GASKET	
BDF			**5P-9119**		GASKET-TAPE (ADHESIVE BACKED)	

B-USE AS REQUIRED
D-ORDER BY THE METER
F-NOT SHOWN
M-METRIC PART

204-6287 **TANK GP-HYDRAULIC** *(contd.)* **i02933542**

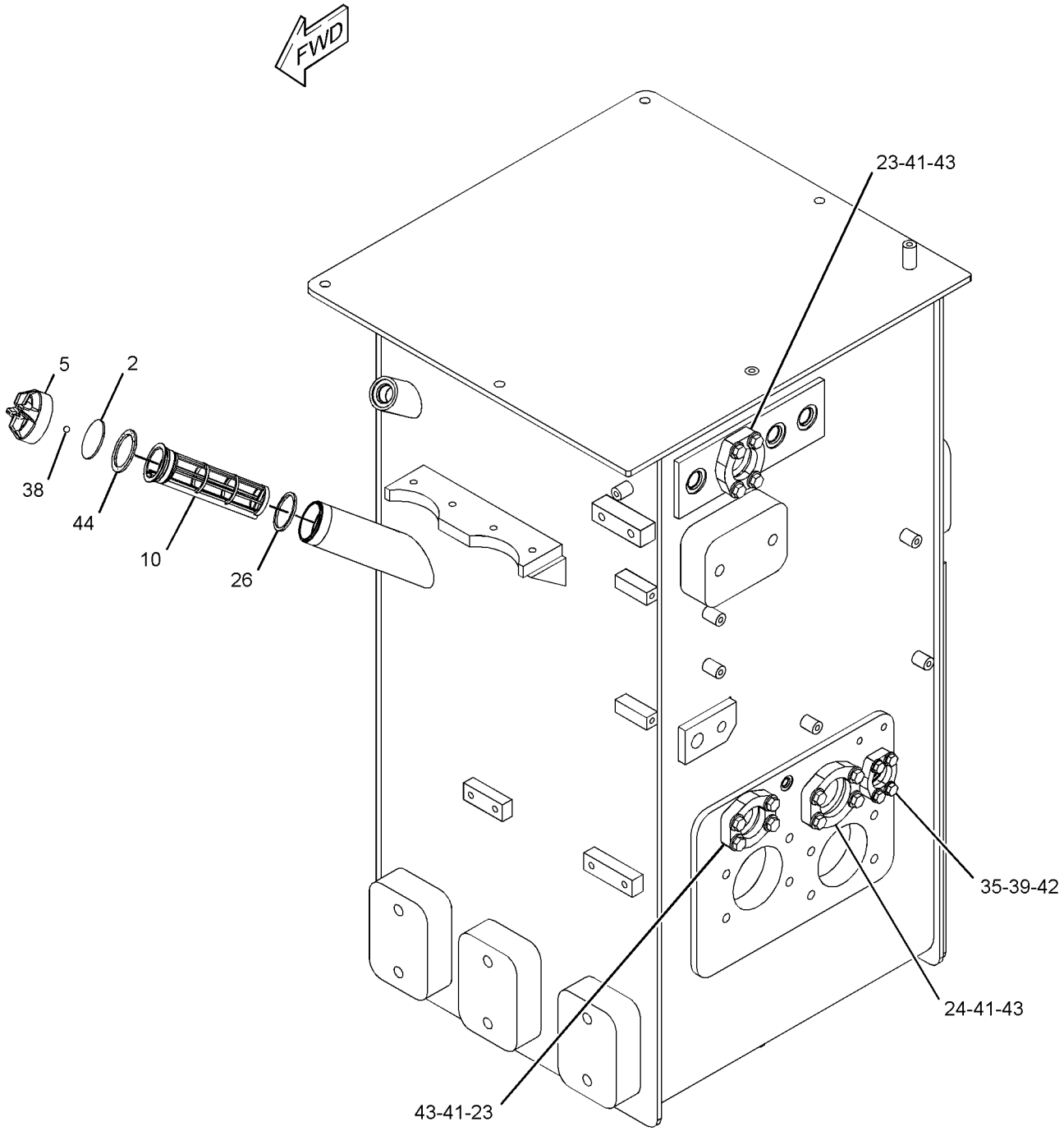

GRAPHIC #1 g01506034

204-6287 **TANK GP-HYDRAULIC** *(contd.)* **i02933542**

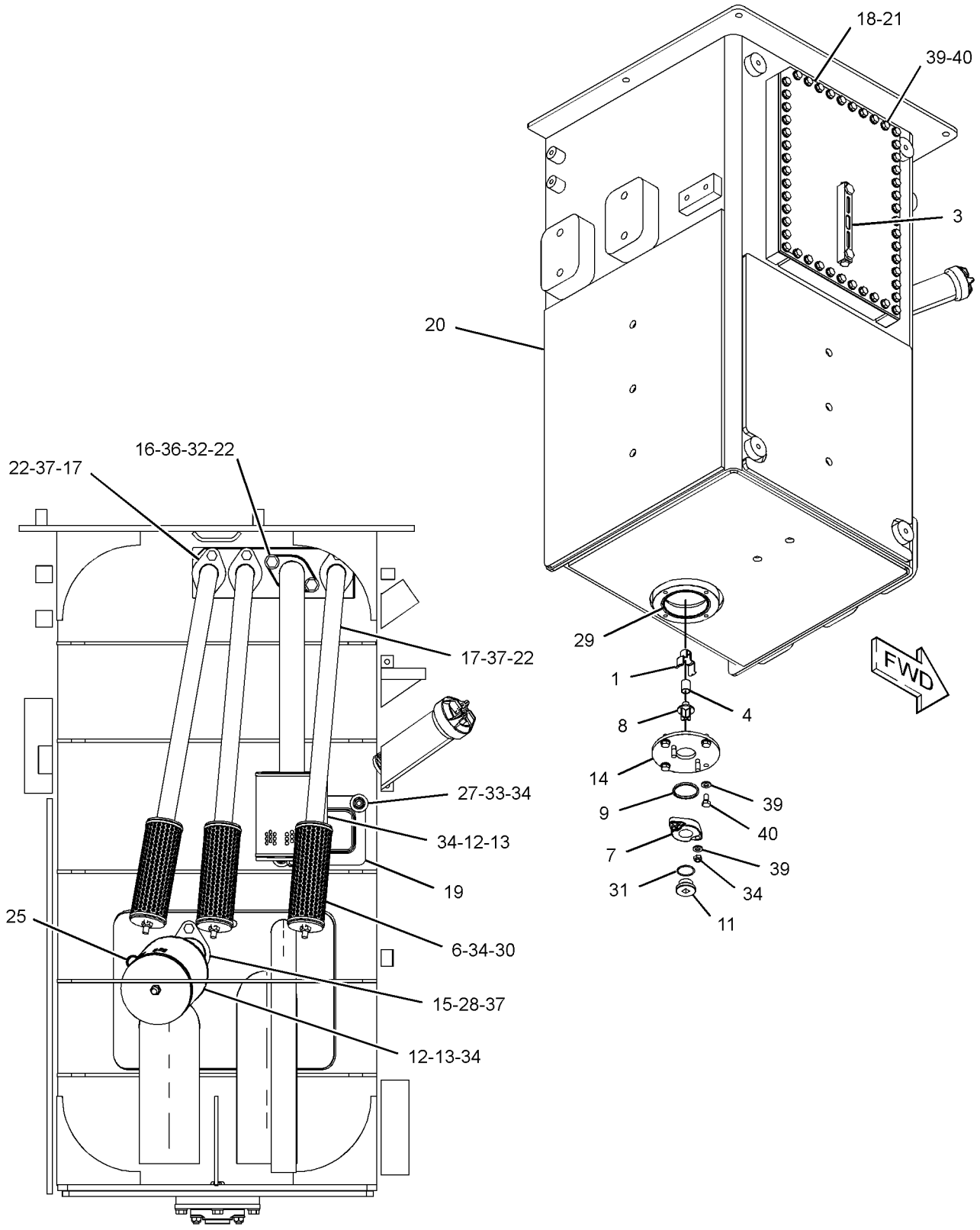

RIGHT SIDE VIEW
(PLATE REMOVED)

GRAPHIC #2 **<END>** g01506035

HYDRAULIC SYSTEM

132-6133 VALVE & MTG GP-MAIN CONTROL—2-FUNCTION

S/N: BXY1-UP
PART OF 255-0040, 255-0042 LIFT AR
AN ATTACHMENT

SMCS-5051 **i03153620**

NOTE	REF NO	GRAPHIC REF	PART NUMBER	QTY	PART NAME 1 2 3 4 5 6 (PRODUCT LEVEL)	SEE PAGE
	1	2	**8T-1674**	1	TEE	
Y	2	2	**9T-3096**	1	VALVE GP-CHECK (PILOT)	1603
I	3	2	**198-7669**	1	HOSE AS	
	4	2	**104-7108**	1	VALVE GP-CHECK (PILOT)	
Y	5	2	**112-1817**	1	VALVE GP-MANUAL (LOWERING CONTROL)	1636
Y	6	1	**212-8712**	1	VALVE GP-MAIN CONTROL (2-FUNCTION)	1617
I	7	2	**198-7667**	1	HOSE AS	
Y	8	2	**151-7455**	1	VALVE GP-SOLENOID (24-VOLT) (HYDRAULIC LOCKOUT)	1658
	9	2	**153-6293**	1	ELBOW	
I	10	2	**198-8196**	1	HOSE AS	
	11	2	**154-5512**	1	BRACKET AS	
	12	1	**154-6819**	1	BRACKET AS	
	13	1	**154-6820**	1	PLATE	
I	14	1	**156-9156**	1	HOSE AS	
	15	2	**154-7179**	1	BRACKET	
	16	2	**198-6434**	1	PLATE	
I	17	2	**198-7670**	1	HOSE AS	
I	18	2	**198-7668**	1	HOSE AS	
	19	2	*148-8353*	1	ELBOW AS	
		2	**3J-1907**	1	SEAL-O-RING	
		2	**6V-8397**	1	SEAL-O-RING	
		2	**6V-9001**	1	ELBOW	
	20	2	*148-8364*	2	ELBOW AS	
					(EACH INCLUDES)	
		2	**6V-8625**	1	ELBOW	
		2	**6V-8398**	1	SEAL-O-RING	
		2	**3K-0360**	1	SEAL-O-RING	
	21	2	*148-8378*	3	ELBOW AS	
					(EACH INCLUDES)	
		2	**6V-8724**	1	ELBOW	
		2	**6V-8397**	1	SEAL-O-RING	
		2	**3J-1907**	1	SEAL-O-RING	
	22	2	*148-8435*	1	TEE AS	
		2	**6V-8781**	1	TEE-FACE SEAL	
		2	**6V-8397**	2	SEAL-O-RING	
		2	**3J-1907**	1	SEAL-O-RING	
	23	1	**1P-3705**	3	SEAL-RECTANGULAR	
	24	1	**3E-9411**	5	WASHER-HARD (17.5X38X6-MM THK)	
	25	2	**3J-1907**	1	SEAL-O-RING	
	26	2	**096-6166**	4	WASHER-HARD (4.5X9X1-MM THK)	
	27	2	**4J-0527**	1	SEAL-O-RING	
	28	2	**5K-9090**	1	SEAL-O-RING	
	29	2	**5P-1076**	2	WASHER-HARD (13.5X30X4-MM THK)	
M	30	2	**6V-8200**	4	BOLT-SOCKET HEAD (M12X1.75X35-MM)	
	31	2	**6V-8397**	1	SEAL-O-RING	
	32	2	**6V-8398**	1	SEAL-O-RING	
	33	2	**6V-9833**	1	CAP AS	
	34	2	**7M-8485**	1	SEAL-O-RING	
	35	1,2	**7X-0583**	8	WASHER-HARD (17X45X6-MM THK)	
M	36	1,2	**7X-2554**	8	BOLT (M16X2X70-MM)	
M	37	2	**8T-0285**	4	SCREW-MACHINE (M4X0.7X12-MM)	
	38	2	**198-6439**	2	PLATE	
M	39	1	**8T-4132**	1	NUT (M16X2-THD)	
M	40	2	**8T-4184**	2	BOLT (M12X1.75X45-MM)	

132-6133 VALVE & MTG GP-MAIN CONTROL *(contd.)* i03153620

NOTE	REF NO	GRAPHIC REF	PART NUMBER	QTY	PART NAME 1 2 3 4 5 6 (PRODUCT LEVEL)	SEE PAGE
M	41	1,2	**8T-4139**	8	BOLT (M12X1.75X30-MM)	
M	42	1	**8T-4140**	8	BOLT (M16X2X60-MM)	
M	43	1	**8T-4175**	1	BOLT (M16X2X90-MM)	
M	44	2	**8T-4192**	4	BOLT (M12X1.75X25-MM)	
M	45	1	**8T-4193**	3	BOLT (M16X2X50-MM)	
	46	1,2	**8T-4223**	14	WASHER-HARD (13.5X25.5X3-MM THK)	
M	47	2	**8T-4648**	2	BOLT (M12X1.75X70-MM)	
	48	1	**9X-8257**	8	WASHER (17.5X30X3.5-MM THK)	
	49	2	*148-8336*	1	CONNECTOR AS	
		2	**3J-1907**	1	SEAL-O-RING	
		2	**6V-8397**	1	SEAL-O-RING	
		2	**6V-8636**	1	CONNECTOR	
	50	2	*148-8367*	1	ELBOW AS	
		2	**6V-8397**	1	SEAL-O-RING	
		2	**6V-9850**	1	ELBOW	
M	51	1	**108-1785**	4	BOLT-SOCKET HEAD (M16X2X130-MM)	
	52	1	**5P-8077**	4	FLANGE-HALF	
	53	1	**321-0619**	1	MANIFOLD	

I-REFER TO HYDRAULIC INFORMATION SYSTEM
M-METRIC PART
Y-SEPARATE ILLUSTRATION

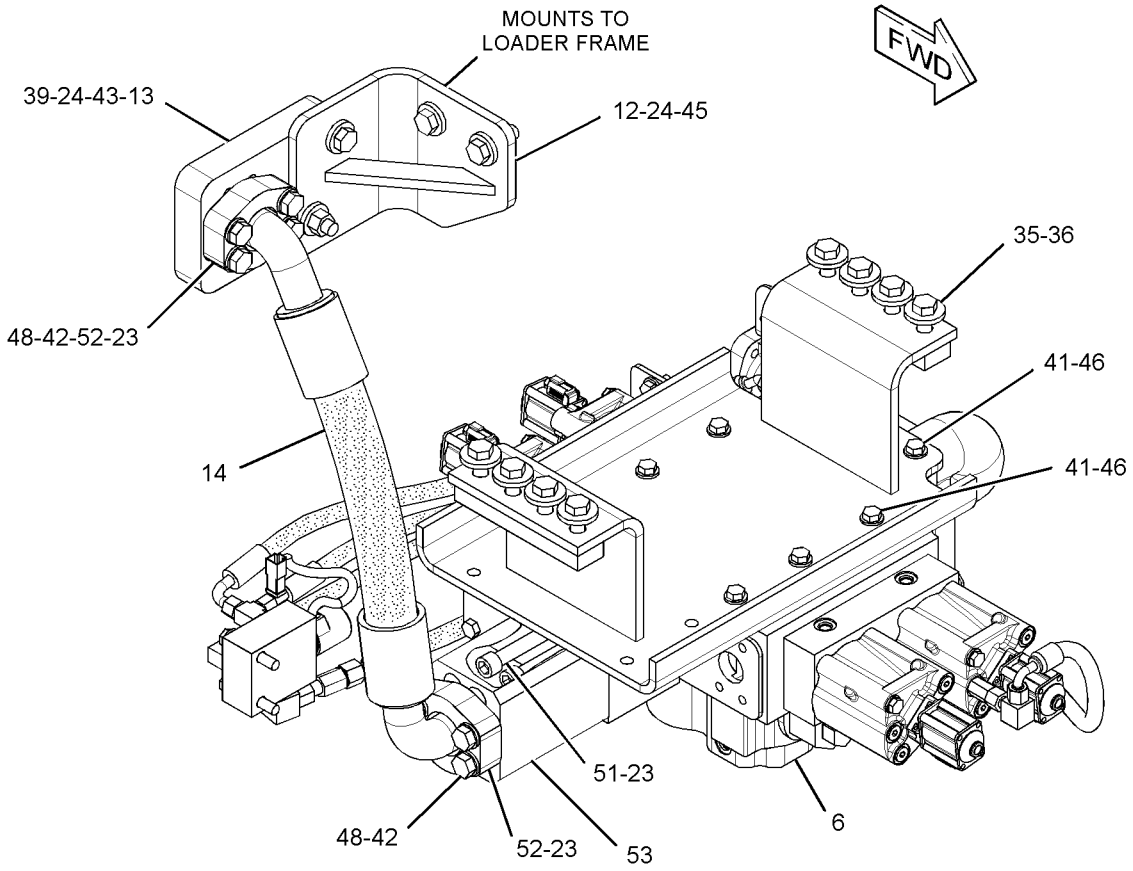

GRAPHIC #1 g01905493

132-6133 **VALVE & MTG GP-MAIN CONTROL** *(contd.)* **i03153620**

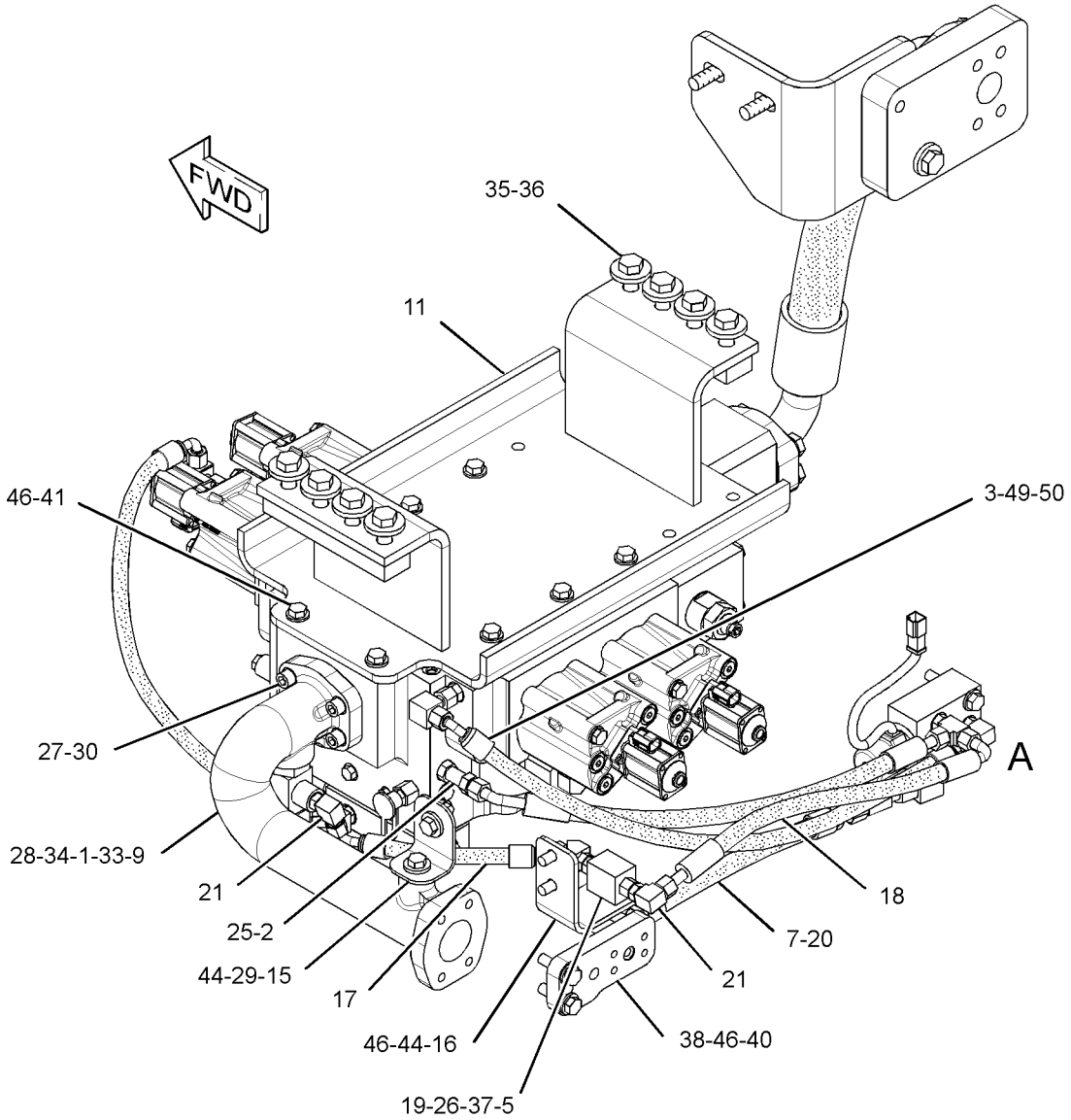

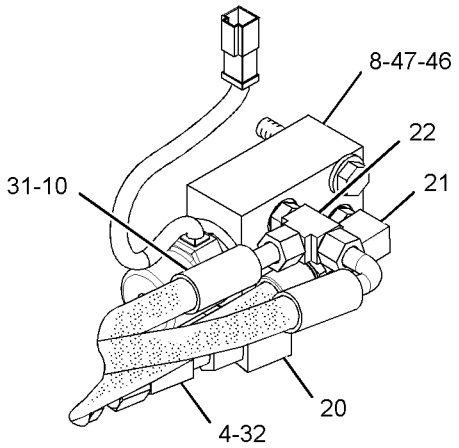

VIEW OF AREA A

GRAPHIC #2 **<END>** g01848340

HYDRAULIC SYSTEM

201-0218 VALVE & MTG GP-MAIN CONTROL—3-FUNCTION

S/N: BXY1-UP

PART OF 255-0041, 255-0043 LIFT AR

AN ATTACHMENT

SMCS-5051 **i02703571**

NOTE	REF NO	GRAPHIC REF	PART NUMBER	QTY	PART NAME 1 2 3 4 5 6 (PRODUCT LEVEL)	SEE PAGE
	1	1	**8T-1674**	1	TEE	
Y	2	1	**9T-3096**	1	VALVE GP-CHECK (PILOT)	1603
	3	1	**104-7108**	1	VALVE GP-CHECK (PILOT)	
Y	4	1	**112-1817**	1	VALVE GP-MANUAL (LOWERING CONTROL)	1636
Y	5	1	**151-7455**	1	VALVE GP-SOLENOID (24-VOLT) (HYDRAULIC LOCKOUT)	1658
	6	1	**153-6293**	1	ELBOW	
	7	1	**154-5512**	1	BRACKET AS	
	8	1	**154-6819**	1	BRACKET AS	
	9	1	**154-6820**	1	PLATE	
	10	1	**154-7179**	1	BRACKET	
I	11	1	**156-9156**	1	HOSE AS	
	12	1	**198-6434**	1	PLATE	
	13	1	**198-6439**	1	PLATE	
I	14	1	**198-7667**	1	HOSE AS	
I	15	1	**198-7668**	1	HOSE AS	
I	16	1	**198-7669**	1	HOSE AS	
I	17	1	**198-7670**	1	HOSE AS	
I	18	1	**198-8196**	1	HOSE AS	
Y	19	1	**212-8746**	1	VALVE GP-MAIN CONTROL (3-FUNCTION)	1621
	20	1	**096-6166**	4	WASHER-HARD (4.5X9X1-MM THK)	
	21	1	*148-8336*	1	CONNECTOR AS	
		1	**6V-8636**	1	CONNECTOR	
		1	**3J-1907**	1	SEAL-O-RING	
		1	**6V-8397**	1	SEAL-O-RING	
	22	1	*148-8353*	1	ELBOW AS	
		1	**6V-9001**	1	ELBOW	
		1	**3J-1907**	1	SEAL-O-RING	
		1	**6V-8397**	1	SEAL-O-RING	
	23	1	*148-8364*	2	ELBOW AS	
					(EACH INCLUDES)	
		1	**3K-0360**	1	SEAL-O-RING	
		1	**6V-8398**	1	SEAL-O-RING	
		1	**6V-8625**	1	ELBOW	
	24	1	*148-8367*	1	ELBOW AS	
		1	**6V-8397**	1	SEAL-O-RING	
		1	**6V-9850**	1	ELBOW	
	25	1	*148-8378*	3	ELBOW AS	
					(EACH INCLUDES)	
		1	**3J-1907**	1	SEAL-O-RING	
		1	**6V-8397**	1	SEAL-O-RING	
		1	**6V-8724**	1	ELBOW	
	26	1	*148-8435*	1	TEE AS	
		1	**3J-1907**	1	SEAL-O-RING	
		1	**6V-8397**	2	SEAL-O-RING	
		1	**6V-8781**	1	TEE-FACE SEAL	
	27	1	**1P-3705**	2	SEAL-RECTANGULAR	
	28	1	**3E-9411**	5	WASHER-HARD (17.5X38X6-MM THK)	
	29	1	**3J-1907**	1	SEAL-O-RING	
	30	1	**4J-0527**	1	SEAL-O-RING	
	31	1	**5K-9090**	1	SEAL-O-RING	
	32	1	**5P-1076**	2	WASHER-HARD (13.5X30X4-MM THK)	
	33	1	**5P-8077**	4	FLANGE-HALF	
M	34	1	**6V-8200**	4	BOLT-SOCKET HEAD (M12X1.75X35-MM)	
	35	1	**6V-8397**	1	SEAL-O-RING	

201-0218 VALVE & MTG GP-MAIN CONTROL *(contd.)* i02703571

NOTE	REF NO	GRAPHIC REF	PART NUMBER	QTY	PART NAME 1 2 3 4 5 6 (PRODUCT LEVEL)	SEE PAGE
	36	1	**6V-8398**	1	SEAL-O-RING	
	37	1	**6V-9833**	1	CAP AS	
	38	1	**7M-8485**	1	SEAL-O-RING	
	39	1	**7X-0583**	8	WASHER-HARD (17X45X6-MM THK)	
M	40	1	**7X-2554**	8	BOLT (M16X2X70-MM)	
M	41	1	**8T-0285**	4	SCREW-MACHINE (M4X0.7X12-MM)	
M	42	1	**8T-4132**	1	NUT (M16X2-THD)	
M	43	1	**8T-4139**	12	BOLT (M12X1.75X30-MM)	
M	44	1	**8T-4140**	8	BOLT (M16X2X60-MM)	
M	45	1	**8T-4175**	1	BOLT (M16X2X90-MM)	
M	46	1	**8T-4184**	2	BOLT (M12X1.75X45-MM)	
M	47	1	**8T-4192**	4	BOLT (M12X1.75X25-MM)	
M	48	1	**8T-4193**	3	BOLT (M16X2X50-MM)	
	49	1	**8T-4223**	18	WASHER-HARD (13.5X25.5X3-MM THK)	
M	50	1	**8T-4648**	2	BOLT (M12X1.75X70-MM)	
	51	1	**9X-8257**	8	WASHER (17.5X30X3.5-MM THK)	

I-REFER TO HYDRAULIC INFORMATION SYSTEM
M-METRIC PART
Y-SEPARATE ILLUSTRATION

201-0218 **VALVE & MTG GP-MAIN CONTROL** *(contd.)* **i02703571**

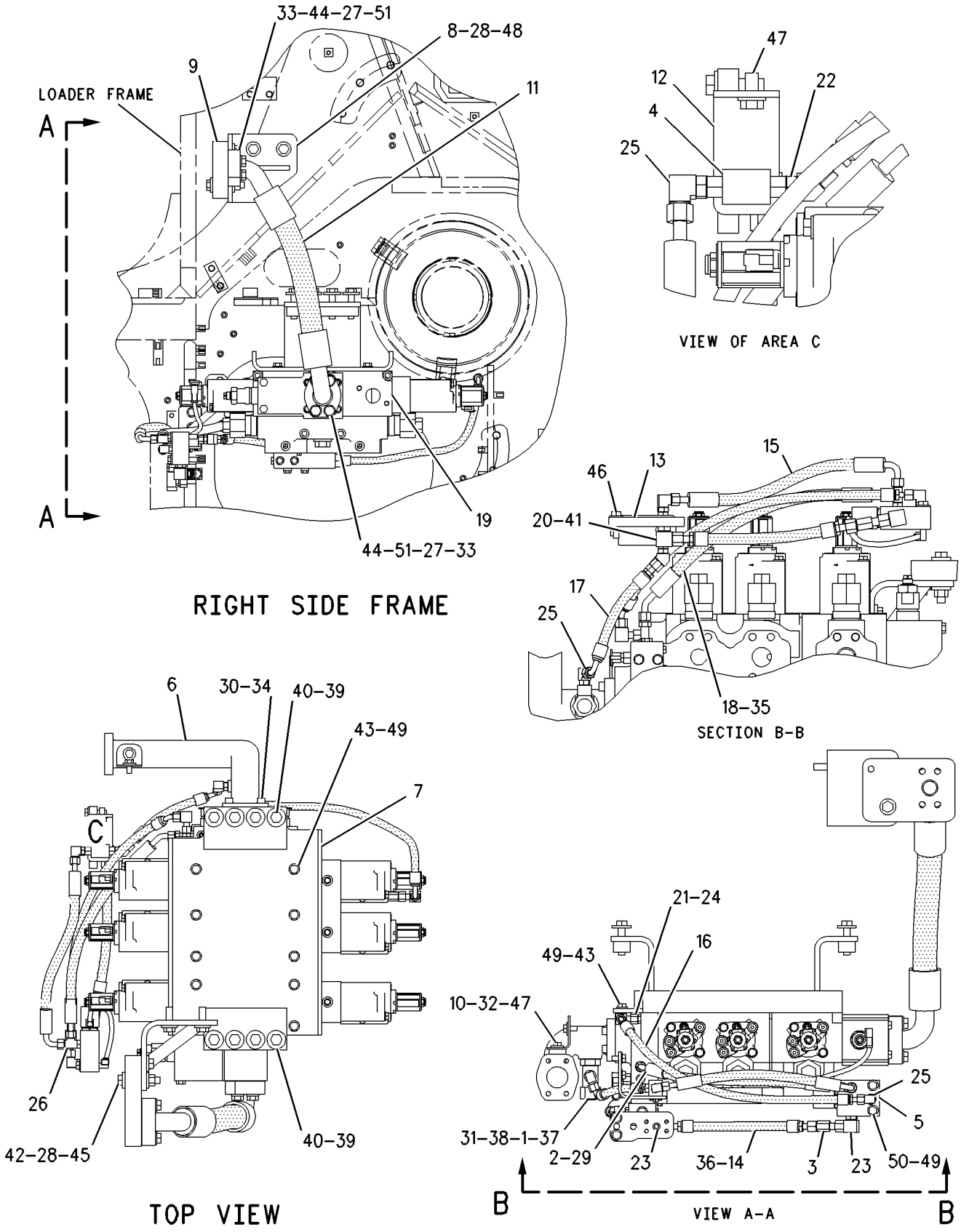

GRAPHIC #1 **<END>** g00849394

HYDRAULIC SYSTEM

298-2500 VALVE & MTG GP-MAIN CONTROL

S/N: BXY2733-2769
PART OF 298-6962, 298-6964 LIFT AR
AN ATTACHMENT

SMCS-5051 **i03359662**

NOTE	REF NO	GRAPHIC REF	PART NUMBER	QTY	PART NAME 1 2 3 4 5 6 (PRODUCT LEVEL)	SEE PAGE
	1	2	**8T-1674**	1	TEE	
Y	2	2	**9T-3096**	1	VALVE GP-CHECK (PILOT)	1603
	3	2	**104-7108**	1	VALVE GP-CHECK (PILOT)	
Y	4	2	**112-1817**	1	VALVE GP-MANUAL (LOWERING CONTROL)	1636
Y	5	2	**151-7455**	1	VALVE GP-SOLENOID (24-VOLT)	1658
	6	1	**153-6293**	1	ELBOW	
	7	1	**154-5512**	1	BRACKET AS	
	8	1	**154-6819**	1	BRACKET AS	
	9	1	**154-6820**	1	PLATE	
	10	1	**154-7179**	1	BRACKET	
I	11	1	**156-9156**	1	HOSE AS	
	12	1	**198-6434**	1	PLATE	
	13	2	**198-6439**	1	PLATE	
I	14	2	**198-7667**	1	HOSE AS	
I	15	1	**198-7668**	1	HOSE AS	
I	16	2	**198-7669**	1	HOSE AS	
I	17	2	**198-7670**	1	HOSE AS	
I	18	1	**278-6470**	1	HOSE AS	
Y	19	1	**292-8121**	1	VALVE GP-MAIN CONTROL (LIFT, TILT)	1626
	20	1	**321-0619**	1	MANIFOLD	
	21	2	**096-6166**	4	WASHER-HARD (4.5X9X1-MM THK)	
M	22	1	**108-1785**	4	BOLT-SOCKET HEAD (M16X2X130-MM)	
	23	2	*148-8336*	1	CONNECTOR AS	
		2	**3J-1907**	1	SEAL-O-RING	
		2	**6V-8397**	1	SEAL-O-RING	
		2	**6V-8636**	1	CONNECTOR	
	24	2	*148-8353*	1	ELBOW AS	
		2	**3J-1907**	1	SEAL-O-RING	
		2	**6V-8397**	1	SEAL-O-RING	
		2	**6V-9001**	1	ELBOW	
	25	2	*148-8364*	2	ELBOW AS	
					(EACH INCLUDES)	
		2	**3K-0360**	1	SEAL-O-RING	
		2	**6V-8398**	1	SEAL-O-RING	
		2	**6V-8625**	1	ELBOW	
	26	2	*148-8367*	1	ELBOW AS	
		2	**6V-8397**	1	SEAL-O-RING	
		2	**6V-9850**	1	ELBOW	
	27	2	*148-8378*	2	ELBOW AS	
					(EACH INCLUDES)	
		2	**3J-1907**	1	SEAL-O-RING	
		2	**6V-8397**	1	SEAL-O-RING	
		2	**6V-8724**	1	ELBOW	
	28	1	*148-8435*	1	TEE AS	
		1	**3J-1907**	1	SEAL-O-RING	
		1	**6V-8397**	2	SEAL-O-RING	
		1	**6V-8781**	1	TEE-FACE SEAL	
	29	1	**1P-3705**	3	SEAL-RECTANGULAR	
	30	1	**3E-9411**	5	WASHER-HARD (17.5X38X6-MM THK)	
	31	2	**3J-1907**	1	SEAL-O-RING	
	32	1	**4J-0527**	1	SEAL-O-RING	
	33	2	**5K-9090**	1	SEAL-O-RING	
	34	1	**5P-1076**	2	WASHER-HARD (13.5X30X4-MM THK)	
	35	1	**5P-8077**	4	FLANGE-HALF	
M	36	1	**6V-8200**	4	BOLT-SOCKET HEAD (M12X1.75X35-MM)	

298-2500 VALVE & MTG GP-MAIN CONTROL *(contd.)* i03359662

NOTE	REF NO	GRAPHIC REF	PART NUMBER	QTY	PART NAME 1 2 3 4 5 6 (PRODUCT LEVEL)	SEE PAGE
	37	1	**6V-8397**	1	SEAL-O-RING	
	38	2	**6V-8398**	1	SEAL-O-RING	
	39	2	**6V-9833**	1	CAP AS	
	40	2	**7M-8485**	1	SEAL-O-RING	
	41	1	**7X-0583**	8	WASHER-HARD (17X45X6-MM THK)	
M	42	1	**7X-2554**	8	BOLT (M16X2X70-MM)	
M	43	2	**8T-0285**	4	SCREW-MACHINE (M4X0.7X12-MM)	
M	44	1	**8T-4132**	1	NUT (M16X2-THD)	
M	45	1,2	**8T-4139**	8	BOLT (M12X1.75X30-MM)	
M	46	1	**8T-4140**	8	BOLT (M16X2X60-MM)	
M	47	1	**8T-4175**	1	BOLT (M16X2X90-MM)	
M	48	2	**8T-4184**	2	BOLT (M12X1.75X45-MM)	
M	49	1	**8T-4192**	4	BOLT (M12X1.75X25-MM)	
M	50	1	**8T-4193**	3	BOLT (M16X2X50-MM)	
	51	1,2	**8T-4223**	14	WASHER-HARD (13.5X25.5X3-MM THK)	
M	52	2	**8T-4648**	2	BOLT (M12X1.75X70-MM)	
	53	1	**9X-8257**	8	WASHER (17.5X30X3.5-MM THK)	

I-REFER TO HYDRAULIC INFORMATION SYSTEM
M-METRIC PART
Y-SEPARATE ILLUSTRATION

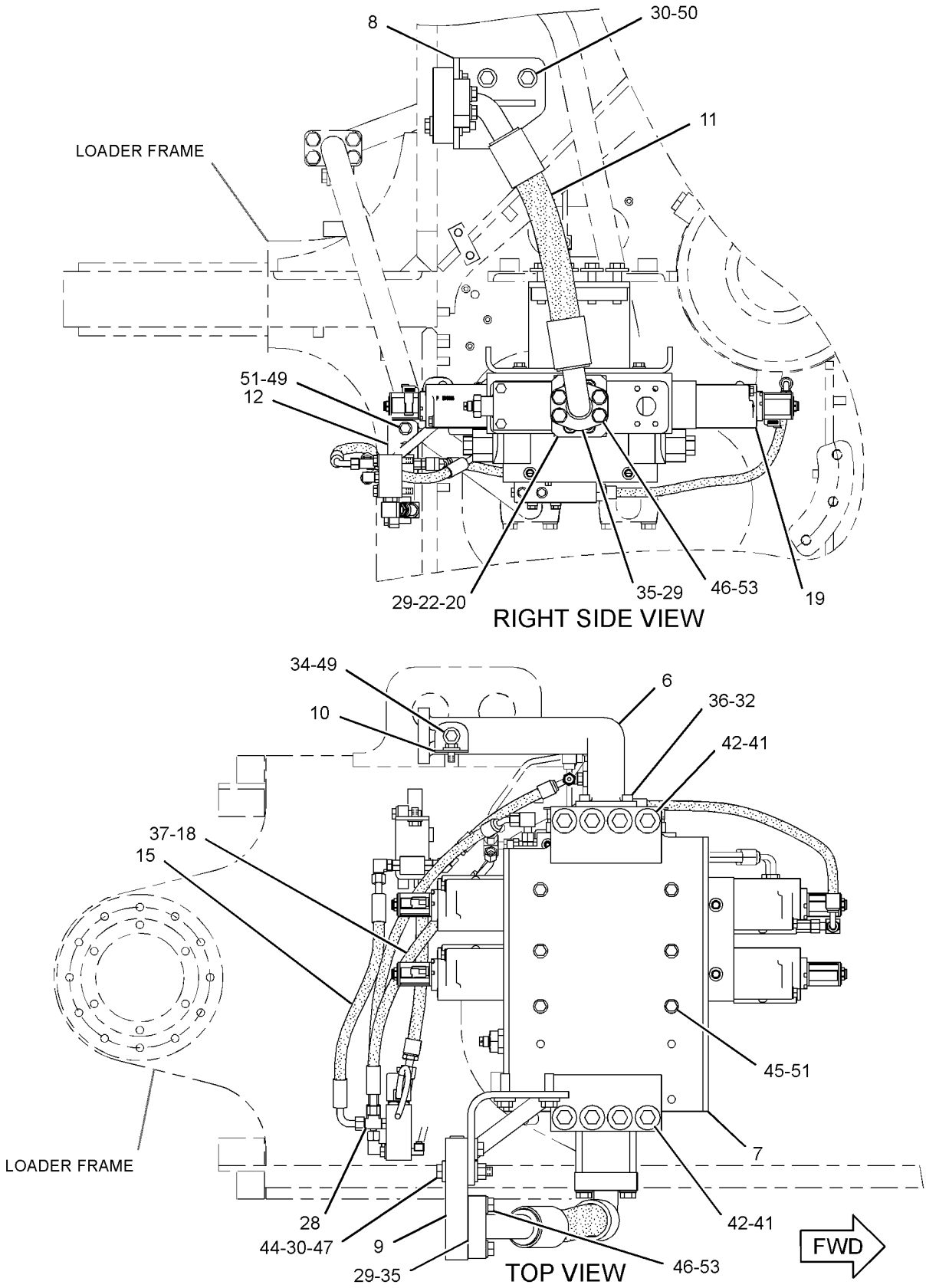

GRAPHIC #1 g01753735

298-2500 **VALVE & MTG GP-MAIN CONTROL** *(contd.)* **i03359662**

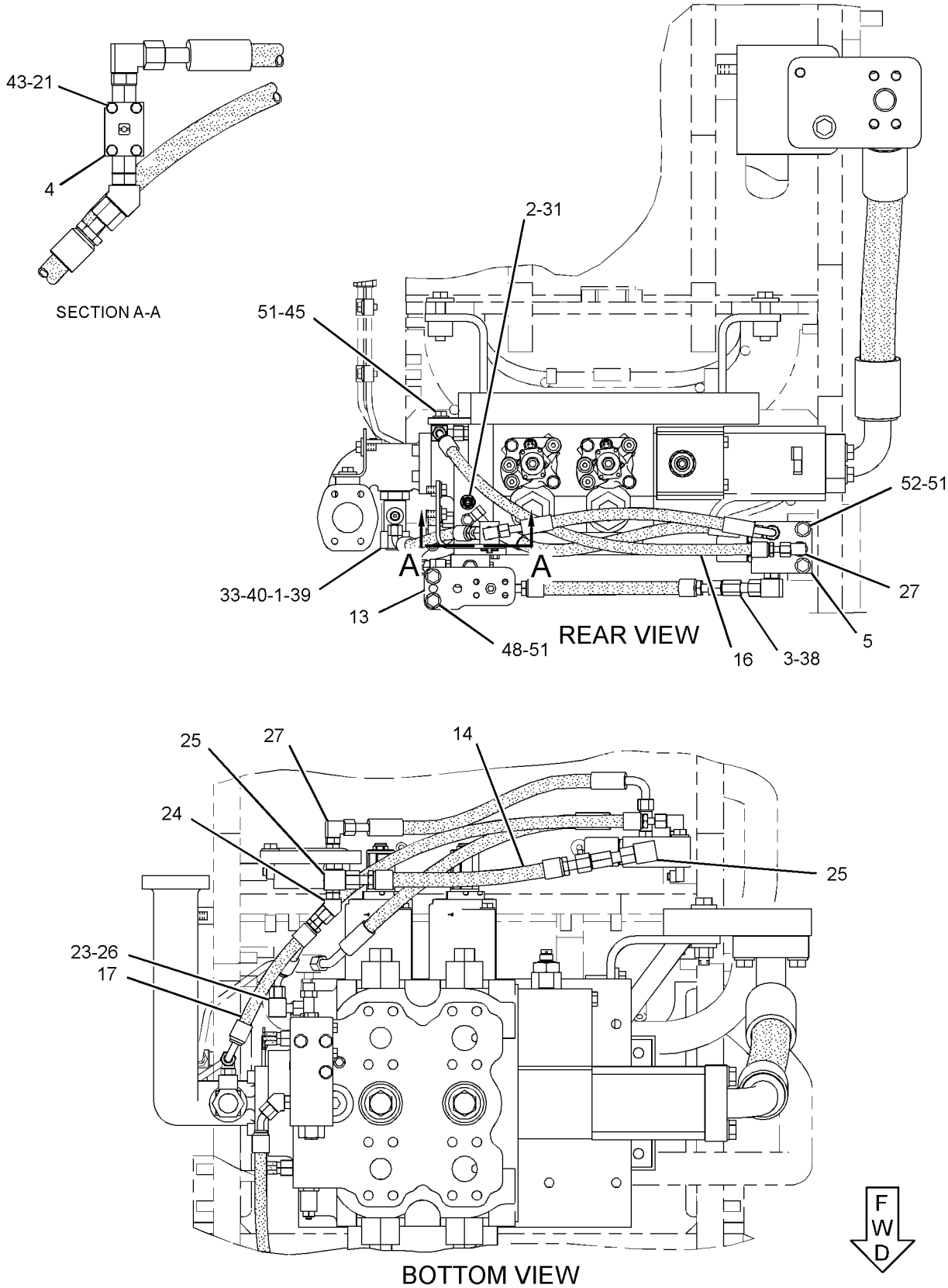

GRAPHIC #2 **<END>** g01755053

HYDRAULIC SYSTEM

298-2500 VALVE & MTG GP-MAIN CONTROL

S/N: BXY2770-3999
PART OF 298-6962, 298-6964 LIFT AR
AN ATTACHMENT

SMCS-5051 **i03623558**

NOTE	REF NO	GRAPHIC REF	PART NUMBER	QTY	PART NAME 1 2 3 4 5 6 (PRODUCT LEVEL)	SEE PAGE
	1	2	**8T-1674**	1	TEE	
Y	2	2	**9T-3096**	1	VALVE GP-CHECK (PILOT)	1603
	3	2	**104-7108**	1	VALVE GP-CHECK (PILOT)	
Y	4	2	**112-1817**	1	VALVE GP-MANUAL (LOWERING CONTROL)	1636
Y	5	2	**151-7455**	1	VALVE GP-SOLENOID (24-VOLT)	1658
	6	1	**153-6293**	1	ELBOW	
	7	1	**154-5512**	1	BRACKET AS	
	8	1	**154-6819**	1	BRACKET AS	
	9	1	**154-6820**	1	PLATE	
	10	1	**154-7179**	1	BRACKET	
I	11	1	**156-9156**	1	HOSE AS	
	12	1	**198-6434**	1	PLATE	
	13	2	**198-6439**	1	PLATE	
I	14	2	**198-7667**	1	HOSE AS	
I	15	1	**198-7668**	1	HOSE AS	
I	16	2	**198-7669**	1	HOSE AS	
I	17	2	**198-7670**	1	HOSE AS	
I	18	1	**278-6470**	1	HOSE AS	
Y	19	1	**292-8121**	1	VALVE GP-MAIN CONTROL (LIFT, TILT)	1626
C	20	2	**335-5218**	1	TUBE AS	
	21	2	**096-6166**	4	WASHER-HARD (4.5X9X1-MM THK)	
C	22	2	**1P-3706**	1	SEAL-RECTANGULAR	
	23	2	*148-8336*	1	CONNECTOR AS	
		2	**3J-1907**	1	SEAL-O-RING	
		2	**6V-8397**	1	SEAL-O-RING	
		2	**6V-8636**	1	CONNECTOR	
	24	2	*148-8353*	1	ELBOW AS	
		2	**3J-1907**	1	SEAL-O-RING	
		2	**6V-8397**	1	SEAL-O-RING	
		2	**6V-9001**	1	ELBOW	
	25	2	*148-8364*	2	ELBOW AS	
					(EACH INCLUDES)	
		2	**3K-0360**	1	SEAL-O-RING	
		2	**6V-8398**	1	SEAL-O-RING	
		2	**6V-8625**	1	ELBOW	
	26	2	*148-8367*	1	ELBOW AS	
		2	**6V-8397**	1	SEAL-O-RING	
		2	**6V-9850**	1	ELBOW	
	27	2	*148-8378*	2	ELBOW AS	
					(EACH INCLUDES)	
		2	**3J-1907**	1	SEAL-O-RING	
		2	**6V-8397**	1	SEAL-O-RING	
		2	**6V-8724**	1	ELBOW	
	28	1	*148-8435*	1	TEE AS	
		1	**3J-1907**	1	SEAL-O-RING	
		1	**6V-8397**	2	SEAL-O-RING	
		1	**6V-8781**	1	TEE-FACE SEAL	
C	29	1	**1P-3705**	2	SEAL-RECTANGULAR	
	30	1	**3E-9411**	5	WASHER-HARD (17.5X38X6-MM THK)	
	31	2	**3J-1907**	1	SEAL-O-RING	
	32	1	**4J-0527**	1	SEAL-O-RING	
	33	2	**5K-9090**	1	SEAL-O-RING	
	34	1	**5P-1076**	2	WASHER-HARD (13.5X30X4-MM THK)	
	35	1	**5P-8077**	4	FLANGE-HALF	
M	36	1	**6V-8200**	4	BOLT-SOCKET HEAD (M12X1.75X35-MM)	

298-2500 VALVE & MTG GP-MAIN CONTROL *(contd.)* i03623558

NOTE	REF NO	GRAPHIC REF	PART NUMBER	QTY	PART NAME 1 2 3 4 5 6 (PRODUCT LEVEL)	SEE PAGE
	37	1	**6V-8397**	1	SEAL-O-RING	
	38	2	**6V-8398**	1	SEAL-O-RING	
	39	2	**6V-9833**	1	CAP AS	
	40	2	**7M-8485**	1	SEAL-O-RING	
	41	1	**7X-0583**	8	WASHER-HARD (17X45X6-MM THK)	
M	42	1	**7X-2554**	8	BOLT (M16X2X70-MM)	
M	43	2	**8T-0285**	4	SCREW-MACHINE (M4X0.7X12-MM)	
M	44	1	**8T-4132**	1	NUT (M16X2-THD)	
M	45	1,2	**8T-4139**	8	BOLT (M12X1.75X30-MM)	
M	46	1	**8T-4140**	8	BOLT (M16X2X60-MM)	
M	47	1	**8T-4175**	1	BOLT (M16X2X90-MM)	
M	48	2	**8T-4184**	2	BOLT (M12X1.75X45-MM)	
M	49	1	**8T-4192**	4	BOLT (M12X1.75X25-MM)	
CM	50	1,2	**8T-4193**	7	BOLT (M16X2X50-MM)	
	51	1,2	**8T-4223**	14	WASHER-HARD (13.5X25.5X3-MM THK)	
M	52	2	**8T-4648**	2	BOLT (M12X1.75X70-MM)	
C	53	1,2	**9X-8257**	12	WASHER (17.5X30X3.5-MM THK)	
	54	2	*148-8433*	1	TEE AS	
		2	**6V-8397**	2	SEAL-O-RING	
		2	**6V-9836**	1	TEE-SWIVEL	

C-CHANGE FROM PREVIOUS TYPE
I-REFER TO HYDRAULIC INFORMATION SYSTEM
M-METRIC PART
Y-SEPARATE ILLUSTRATION

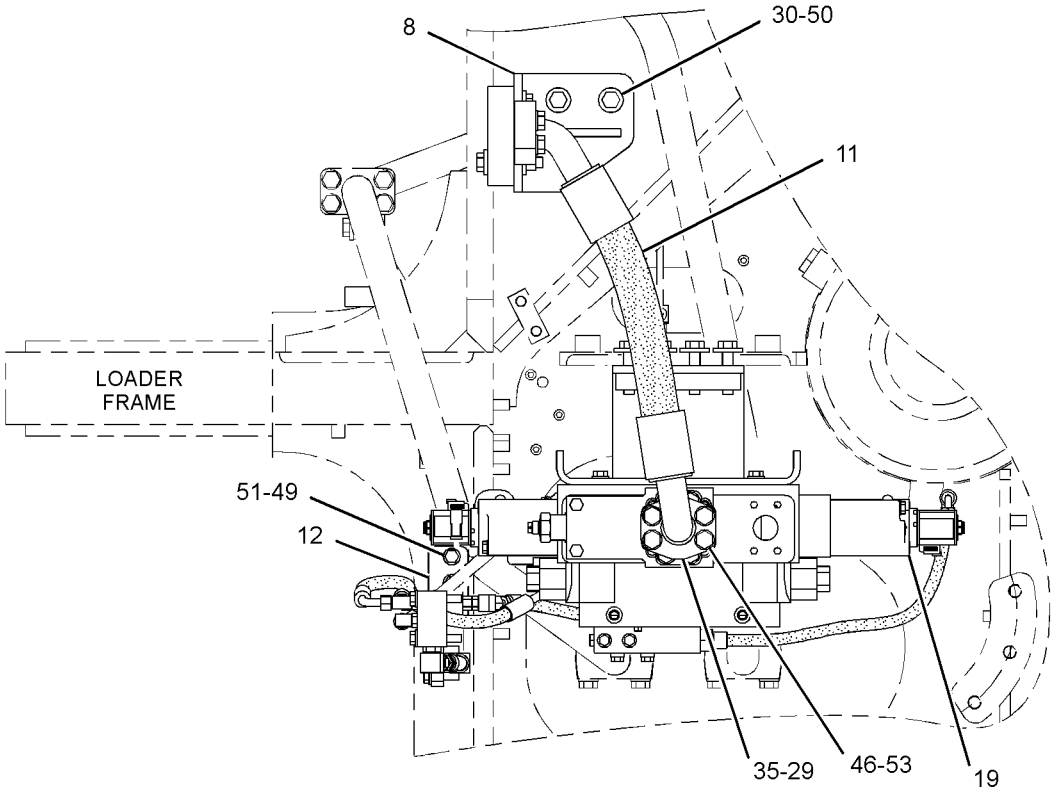

RIGHT SIDE VIEW

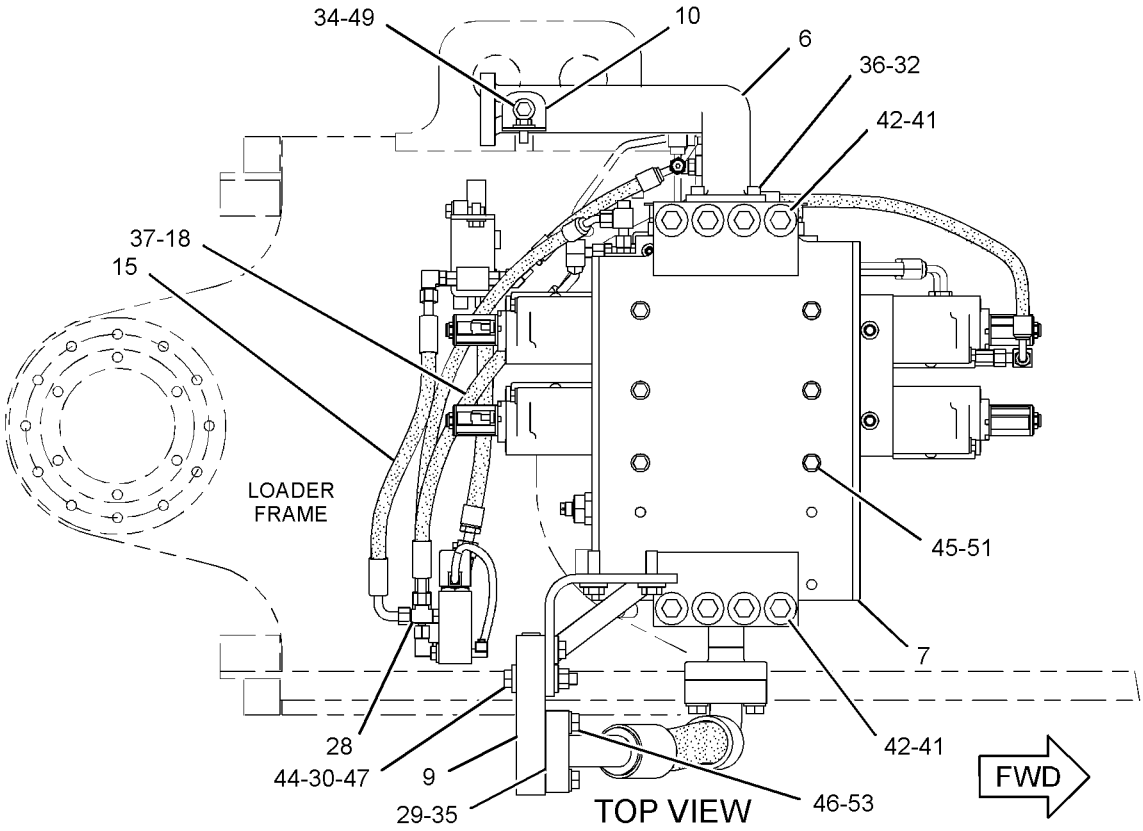

TOP VIEW

GRAPHIC #1

g02056234

298-2500 **VALVE & MTG GP-MAIN CONTROL** *(contd.)* **i03623558**

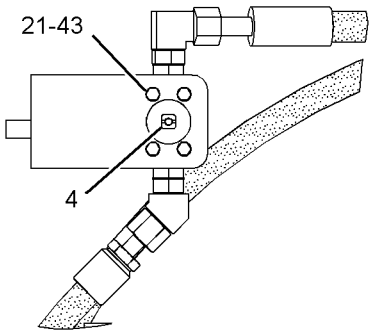

SECTION A-A

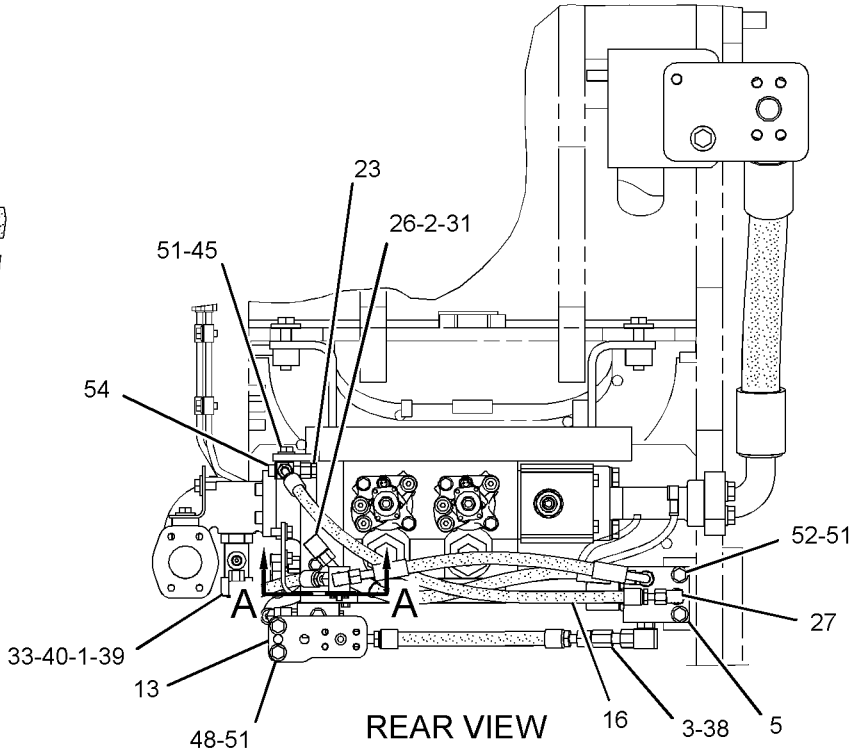

REAR VIEW

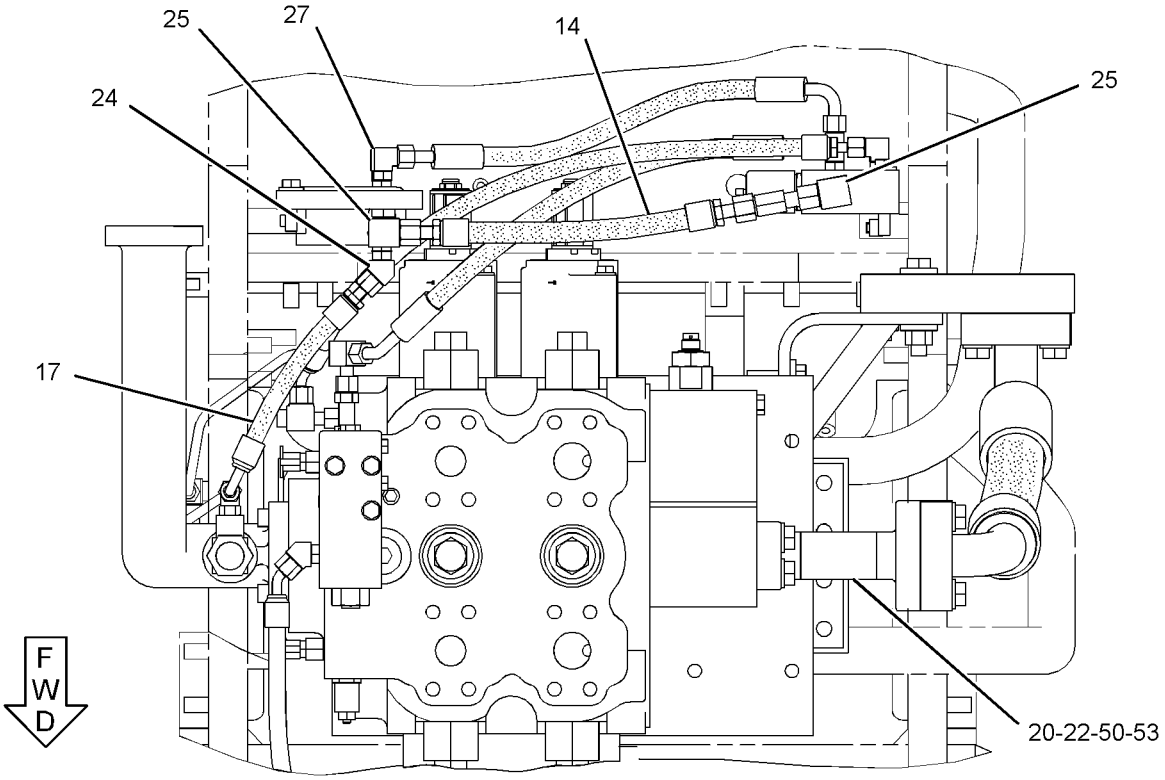

BOTTOM VIEW

GRAPHIC #2 **<END>** g02056137

HYDRAULIC SYSTEM

298-2501 VALVE & MTG GP-MAIN CONTROL

S/N: BXY2733-3999
PART OF 298-6963, 298-6965 LIFT AR
AN ATTACHMENT

SMCS-5051 **i03623755**

NOTE	REF NO	GRAPHIC REF	PART NUMBER	QTY	PART NAME 1 2 3 4 5 6 (PRODUCT LEVEL)	SEE PAGE
	1	2	**8T-1674**	1	TEE	
Y	2	2	**9T-3096**	1	VALVE GP-CHECK (PILOT)	1603
	3	2	**104-7108**	1	VALVE GP-CHECK (PILOT)	
Y	4	2	**112-1817**	1	VALVE GP-MANUAL (LOWERING CONTROL)	1636
Y	5	2	**151-7455**	1	VALVE GP-SOLENOID (24-VOLT)	1658
	6	1	**153-6293**	1	ELBOW	
	7	1	**154-5512**	1	BRACKET AS	
	8	1	**154-6819**	1	BRACKET AS	
	9	1	**154-6820**	1	PLATE	
	10	2	**154-7179**	1	BRACKET	
I	11	1	**156-9156**	1	HOSE AS	
	12	1	**198-6434**	1	PLATE	
	13	2	**198-6439**	1	PLATE	
I	14	2	**198-7667**	1	HOSE AS	
I	15	2	**198-7668**	1	HOSE AS	
I	16	2	**198-7669**	1	HOSE AS	
I	17	2	**198-7670**	1	HOSE AS	
I	18	2	**278-6470**	1	HOSE AS	
Y	19	1	**292-8123**	1	VALVE GP-MAIN CONTROL	1631
	20	2	**096-6166**	4	WASHER-HARD (4.5X9X1-MM THK)	
	21	2	*148-8336*	1	CONNECTOR AS	
		2	**3J-1907**	1	SEAL-O-RING	
		2	**6V-8397**	1	SEAL-O-RING	
		2	**6V-8636**	1	CONNECTOR	
	22	2	*148-8353*	1	ELBOW AS	
		2	**3J-1907**	1	SEAL-O-RING	
		2	**6V-8397**	1	SEAL-O-RING	
		2	**6V-9001**	1	ELBOW	
	23	2	*148-8364*	2	ELBOW AS	
					(EACH INCLUDES)	
		2	**3K-0360**	1	SEAL-O-RING	
		2	**6V-8398**	1	SEAL-O-RING	
		2	**6V-8625**	1	ELBOW	
	24	2	*148-8367*	1	ELBOW AS	
		2	**6V-8397**	1	SEAL-O-RING	
		2	**6V-9850**	1	ELBOW	
	25	2	*148-8378*	2	ELBOW AS	
					(EACH INCLUDES)	
		2	**3J-1907**	1	SEAL-O-RING	
		2	**6V-8397**	1	SEAL-O-RING	
		2	**6V-8724**	1	ELBOW	
	26	1	*148-8435*	1	TEE AS	
		1	**3J-1907**	1	SEAL-O-RING	
		1	**6V-8397**	2	SEAL-O-RING	
		1	**6V-8781**	1	TEE-FACE SEAL	
	27	1	**1P-3705**	2	SEAL-RECTANGULAR	
	28	1	**3E-9411**	5	WASHER-HARD (17.5X38X6-MM THK)	
	29	2	**3J-1907**	1	SEAL-O-RING	
	30	1	**4J-0527**	1	SEAL-O-RING	
	31	2	**5K-9090**	1	SEAL-O-RING	
	32	2	**5P-1076**	2	WASHER-HARD (13.5X30X4-MM THK)	
	33	1	**5P-8077**	4	FLANGE-HALF	
M	34	1	**6V-8200**	4	BOLT-SOCKET HEAD (M12X1.75X35-MM)	
	35	2	**6V-8397**	1	SEAL-O-RING	
	36	2	**6V-8398**	1	SEAL-O-RING	

298-2501 VALVE & MTG GP-MAIN CONTROL *(contd.)* i03623755

NOTE	REF NO	GRAPHIC REF	PART NUMBER	QTY	PART NAME 1 2 3 4 5 6 (PRODUCT LEVEL)	SEE PAGE
	37	2	**6V-9833**	1	CAP AS	
	38	2	**7M-8485**	1	SEAL-O-RING	
	39	1	**7X-0583**	8	WASHER-HARD (17X45X6-MM THK)	
M	40	1	**7X-2554**	8	BOLT (M16X2X70-MM)	
M	41	2	**8T-0285**	4	SCREW-MACHINE (M4X0.7X12-MM)	
M	42	1	**8T-4132**	1	NUT (M16X2-THD)	
M	43	1,2	**8T-4139**	12	BOLT (M12X1.75X30-MM)	
M	44	1	**8T-4140**	8	BOLT (M16X2X60-MM)	
M	45	1	**8T-4175**	1	BOLT (M16X2X90-MM)	
M	46	2	**8T-4184**	2	BOLT (M12X1.75X45-MM)	
M	47	1,2	**8T-4192**	4	BOLT (M12X1.75X25-MM)	
M	48	1	**8T-4193**	3	BOLT (M16X2X50-MM)	
	49	1,2	**8T-4223**	18	WASHER-HARD (13.5X25.5X3-MM THK)	
M	50	2	**8T-4648**	2	BOLT (M12X1.75X70-MM)	
	51	1	**9X-8257**	8	WASHER (17.5X30X3.5-MM THK)	
	52	2	*148-8433*	1	TEE AS	
		2	**6V-8397**	2	SEAL-O-RING	
		2	**6V-9836**	1	TEE-SWIVEL	

I-REFER TO HYDRAULIC INFORMATION SYSTEM
M-METRIC PART
Y-SEPARATE ILLUSTRATION

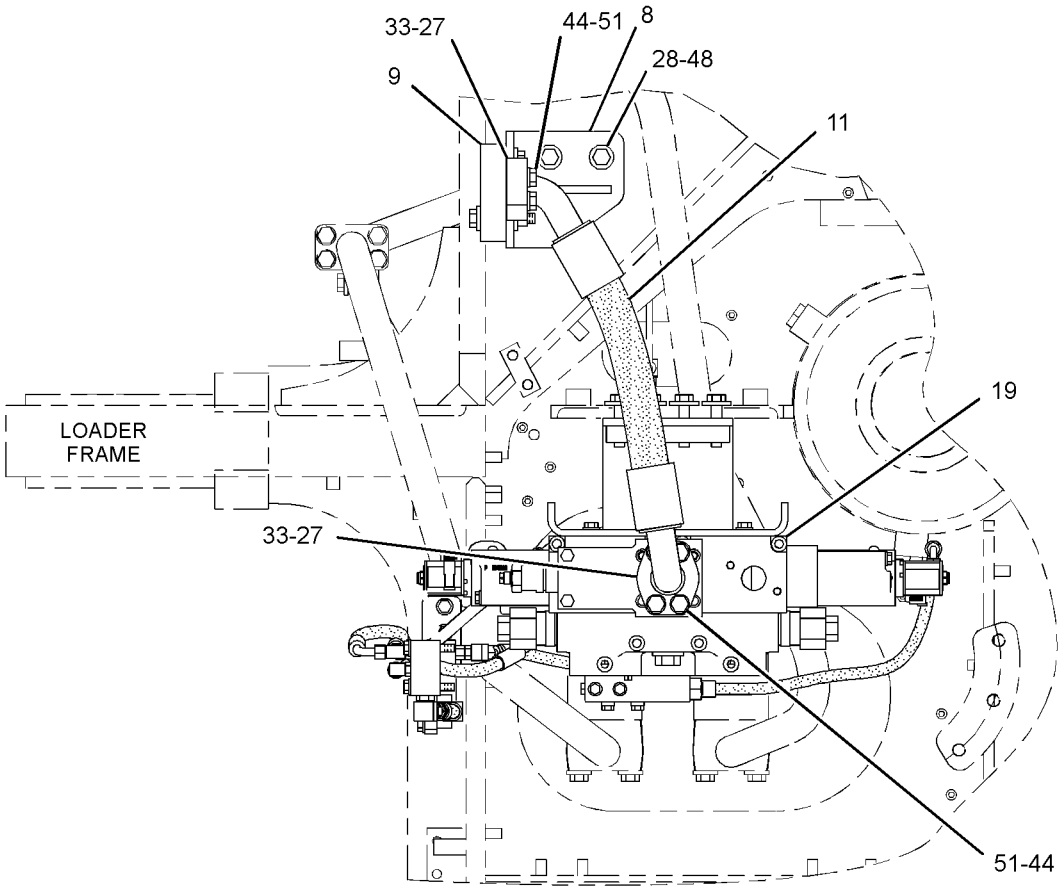

RIGHT SIDE VIEW

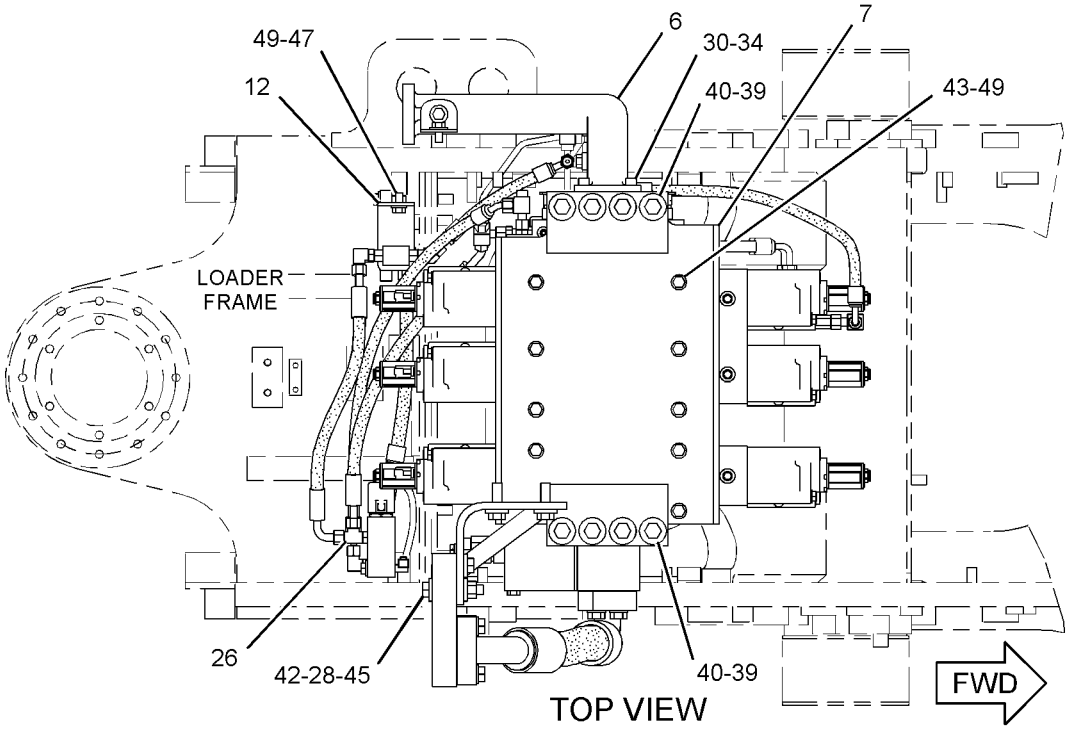

TOP VIEW

GRAPHIC #1 g02056296

298-2501 **VALVE & MTG GP-MAIN CONTROL** *(contd.)* **i03623755**

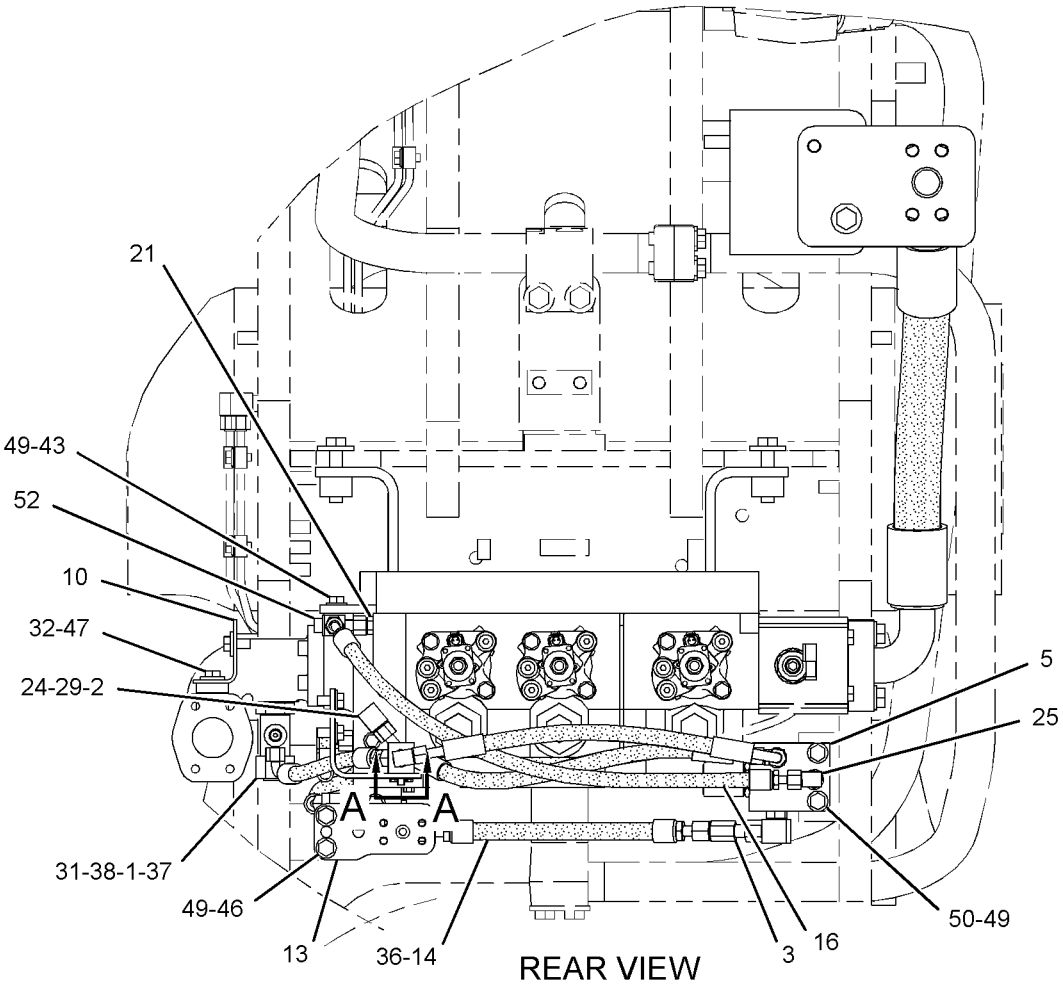

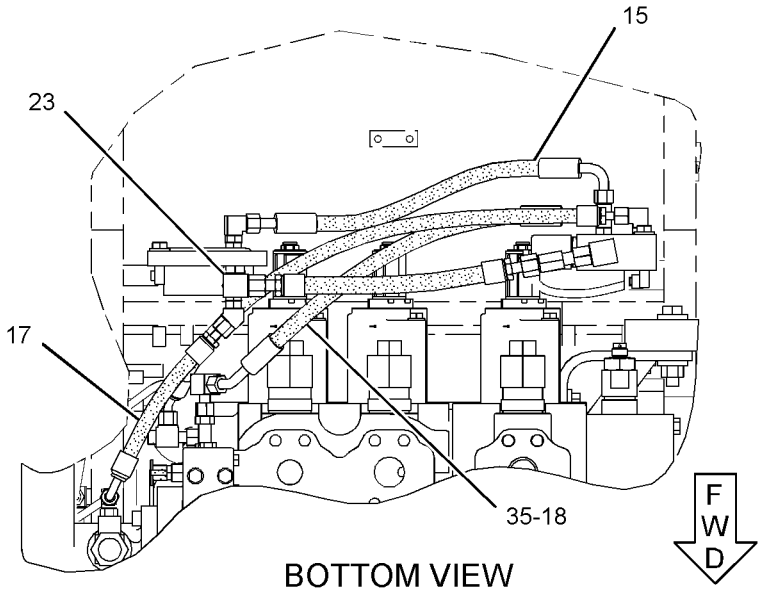

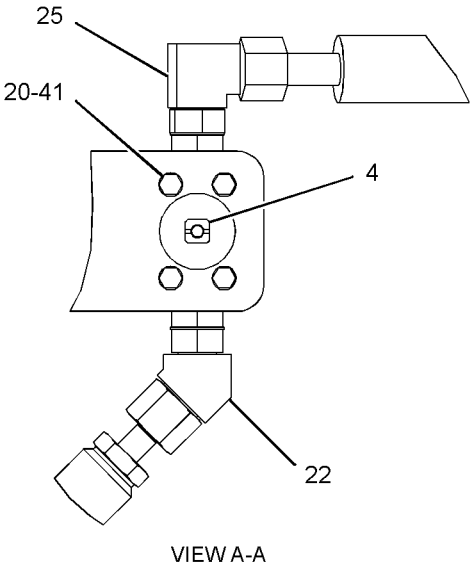

GRAPHIC #2 **<END>** g02056080

HYDRAULIC SYSTEM

315-8815 VALVE & MTG GP-MAIN CONTROL

S/N: BXY4000-UP
PART OF 298-6962, 298-6964 LIFT AR
AN ATTACHMENT

SMCS-5051 **i03760794**

NOTE	REF NO	GRAPHIC REF	PART NUMBER	QTY	PART NAME 1 2 3 4 5 6 (PRODUCT LEVEL)	SEE PAGE
	1	2	*3J-3679*	1	PLUG AS	
		2	**1J-9671**	1	SEAL-O-RING	
		2	**9S-8003**	1	PLUG	
	2	2	**6H-7062**	1	SPACER (13.5X25X19-MM THK)	
	3	2	**6V-0852**	1	CAP-DUST	
	4	1	**8T-1674**	1	TEE	
	5	2	**9X-6772**	3	STRAP-CABLE	
Y	6	2	**112-1817**	1	VALVE GP-MANUAL	1636
	7	2	**124-3019**	2	BRACKET AS	
					(EACH INCLUDES)	
M		2	**8T-3490**	1	NUT-WELD (M10X1.5-THD)	
Y	8	2	**151-7455**	1	VALVE GP-SOLENOID (24-VOLT)	1658
	9	1	**153-6293**	1	ELBOW	
	10	2	**154-5512**	1	BRACKET AS	
Y	11	2	**173-7455**	1	VALVE GP-SOLENOID (LOAD SENSING)	1660
	12	2	*196-2036*	1	TEE AS	
		2	**3K-0360**	1	SEAL-O-RING	
		2	**6V-8398**	1	SEAL-O-RING	
		2	**9X-2492**	1	TEE-O-RING	
Y	13	1	**222-4436**	1	VALVE GP-CONTROL	1604
	14	2	**315-8852**	1	BRACKET	
	15	2	**315-8854**	1	PLATE AS	
M		2	**7X-0752**	1	BOSS-WELD (M10X1.5X65-MM OAL)	
M		2	**8T-3490**	3	NUT-WELD (M10X1.5-THD)	
M		2	**8T-3612**	2	NUT-WELD (M8X1.25-THD)	
M		2	**8T-4935**	2	BOSS-WELD (M10X1.5X45-MM)	
	16	1	**315-8857**	1	TUBE AS	
	17	1	**315-8858**	1	TUBE AS	
	18	2	**315-8859**	1	MANIFOLD	
	19	2	**315-8861**	1	BRACKET	
	20	2	**315-8862**	1	TUBE AS	
	21	2	**315-8863**	1	TUBE AS	
	22	1	**315-8864**	1	TUBE AS	
	23	1	**315-8866**	1	TUBE AS	
	24	2	**315-8867**	1	TUBE AS	
	25	2	**315-8868**	1	TUBE AS	
	26	2	**315-8869**	1	TUBE AS	
	27	2	**315-8871**	1	TUBE AS	
	28	2	**315-8872**	1	TUBE AS	
	29	2	**315-8873**	1	TUBE AS	
	30	2	**315-8994**	1	BRACKET	
I	31	2	*315-9326*	1	HOSE AS	
	32	1	**315-9426**	1	TUBE AS	
	33	1	**315-9485**	1	BRACKET AS	
M		1	**9X-6269**	2	NUT-WELD (M16X2-THD)	
		1	*315-9484*	1	BRACKET	
Y	34	2	**322-3793**	1	MANIFOLD GP-CONTROL	1538
	35	2	**096-6166**	4	WASHER-HARD (4.5X9X1-MM THK)	
	36	1	**103-1303**	2	CLAMP-HALF	
	37	2	*148-8315*	1	CONNECTOR AS	
		2	**2M-9780**	1	SEAL-O-RING	
		2	**6V-8642**	1	CONNECTOR	
		2	**7J-9108**	1	SEAL-O-RING	
	38	2	*148-8336*	6	CONNECTOR AS	
					(EACH INCLUDES)	

315-8815 VALVE & MTG GP-MAIN CONTROL *(contd.)* i03760794

NOTE	REF NO	GRAPHIC REF	PART NUMBER	QTY	PART NAME 1 2 3 4 5 6 (PRODUCT LEVEL)	SEE PAGE
		2	**3J-1907**	1	SEAL-O-RING	
		2	**6V-8397**	1	SEAL-O-RING	
		2	**6V-8636**	1	CONNECTOR	
	39	1	*148-8340*	1	CONNECTOR AS	
		1	**3K-0360**	1	SEAL-O-RING	
		1	**6V-8398**	1	SEAL-O-RING	
		1	**6V-8639**	1	CONNECTOR	
	40	2	*148-8342*	1	CONNECTOR AS	
		2	**3K-0360**	1	SEAL-O-RING	
		2	**6V-8632**	1	CONNECTOR	
		2	**7J-9108**	1	SEAL-O-RING	
	41	2	*148-8347*	1	ELBOW AS	
		2	**3D-2824**	1	SEAL-O-RING	
		2	**6V-9007**	1	ELBOW	
		2	**6V-9746**	1	SEAL-O-RING	
	42	2	*148-8364*	3	ELBOW AS	
					(EACH INCLUDES)	
		2	**3K-0360**	1	SEAL-O-RING	
		2	**6V-8398**	1	SEAL-O-RING	
		2	**6V-8625**	1	ELBOW	
	43	2	*148-8365*	2	ELBOW AS	
					(EACH INCLUDES)	
		2	**3J-1907**	1	SEAL-O-RING	
		2	**6V-8398**	1	SEAL-O-RING	
		2	**8T-6876**	1	ELBOW	
	44	2	*148-8367*	1	ELBOW AS	
		2	**6V-8397**	1	SEAL-O-RING	
		2	**6V-9850**	1	ELBOW	
	45	1,2	*148-8378*	3	ELBOW AS	
					(EACH INCLUDES)	
		1,2	**3J-1907**	1	SEAL-O-RING	
		1,2	**6V-8397**	1	SEAL-O-RING	
		1,2	**6V-8724**	1	ELBOW	
	46	2	*148-8433*	1	TEE AS	
		2	**6V-8397**	2	SEAL-O-RING	
		2	**6V-9836**	1	TEE-SWIVEL	
	47	1	*148-8439*	1	TEE AS	
		1	**3J-1907**	1	SEAL-O-RING	
		1	**6V-8397**	2	SEAL-O-RING	
		1	**6V-8774**	1	TEE	
	48	1	*148-8444*	1	TEE AS-SWIVEL	
		1	**6V-8398**	2	SEAL-O-RING	
		1	**6V-9837**	1	TEE-SWIVEL	
	49	2	*148-8452*	1	TEE AS	
		2	**6V-8397**	1	SEAL-O-RING	
		2	**6V-8398**	2	SEAL-O-RING	
		2	**8T-2363**	1	TEE-UNION	
	50	2	*150-3035*	1	ELBOW AS	
		2	**6V-9746**	1	SEAL-O-RING	
		2	**8T-1718**	1	ELBOW	
	51	2	*150-4037*	1	TEE AS	
		2	**6V-8398**	2	SEAL-O-RING	
		2	**6V-9844**	1	TEE-SWIVEL	
	52	2	*164-5567*	1	COUPLER AS-QUICK DISCONNECT	
		2	**6V-3965**	1	FITTING (QUICK DISCONNECT)	
		2	**214-7568**	1	SEAL-O-RING	
	53	1	**1P-3706**	1	SEAL-RECTANGULAR	
	54	2	*296-5725*	1	TEE AS	
		2	**3K-0360**	1	SEAL-O-RING	

315-8815 VALVE & MTG GP-MAIN CONTROL *(contd.)* i03760794

NOTE	REF NO	GRAPHIC REF	PART NUMBER	QTY	PART NAME 1 2 3 4 5 6 (PRODUCT LEVEL)	SEE PAGE
		2	**7J-9108**	2	SEAL-O-RING	
		2	**109-5811**	1	TEE-O-RING PORT	
	55	1	**4J-0525**	1	SEAL-O-RING	
	56	1	**4J-0527**	1	SEAL-O-RING	
	57	1	**5K-9090**	1	SEAL-O-RING	
	58	2	**5P-1076**	6	WASHER-HARD (13.5X30X4-MM THK)	
	59	2	**5P-4116**	2	WASHER-HARD (8.8X20.5X2-MM THK)	
	60	1	**5P-8077**	2	FLANGE-HALF	
M	61	1	**6V-3668**	2	BOLT (M12X1.75X30-MM)	
M	62	1	**6V-8200**	4	BOLT-SOCKET HEAD (M12X1.75X35-MM)	
	63	1	**6V-9830**	1	CAP AS	
	64	1	**6V-9833**	1	CAP AS	
	65	1	**7M-8485**	1	SEAL-O-RING	
	66	2	**7X-0583**	8	WASHER-HARD (17X45X6-MM THK)	
M	67	1	**7X-2553**	2	BOLT (M16X2X40-MM)	
M	68	2	**7X-2554**	8	BOLT (M16X2X70-MM)	
	69	2	**7X-7729**	6	WASHER (11X25X3-MM THK)	
	70	2	**8M-2770**	1	CLIP	
M	71	2	**8T-0285**	4	SCREW-MACHINE (M4X0.7X12-MM)	
	72	2	**8T-4121**	3	WASHER-HARD (11X21X2.5-MM THK)	
	73	1	**8T-4122**	4	WASHER-HARD (17X32X3.5-MM THK)	
M	74	2	**8T-4136**	2	BOLT (M10X1.5X25-MM)	
M	75	2	**8T-4139**	14	BOLT (M12X1.75X30-MM)	
M	76	1	**8T-4140**	4	BOLT (M16X2X60-MM)	
M	77	2	**8T-4172**	2	BOLT (M10X1.5X80-MM)	
M	78	2	**8T-4186**	1	BOLT (M10X1.5X40-MM)	
M	79	1	**8T-4193**	4	BOLT (M16X2X50-MM)	
M	80	2	**8T-4195**	4	BOLT (M10X1.5X30-MM)	
	81	2	**8T-4223**	12	WASHER-HARD (13.5X25.5X3-MM THK)	
M	82	2	**8T-4648**	2	BOLT (M12X1.75X70-MM)	
M	83	1	**8T-4779**	2	BOLT (M16X2X35-MM)	
M	84	2	**8T-4956**	2	BOLT (M12X1.75X35-MM)	
M	85	2	**8T-6869**	2	BOLT (M8X1.25X60-MM)	
	86	1	**8W-2966**	1	COVER	
	87	1	**9X-8257**	4	WASHER (17.5X30X3.5-MM THK)	

I-REFER TO HYDRAULIC INFORMATION SYSTEM
M-METRIC PART
Y-SEPARATE ILLUSTRATION

315-8815 **VALVE & MTG GP-MAIN CONTROL** *(contd.)* **i03760794**

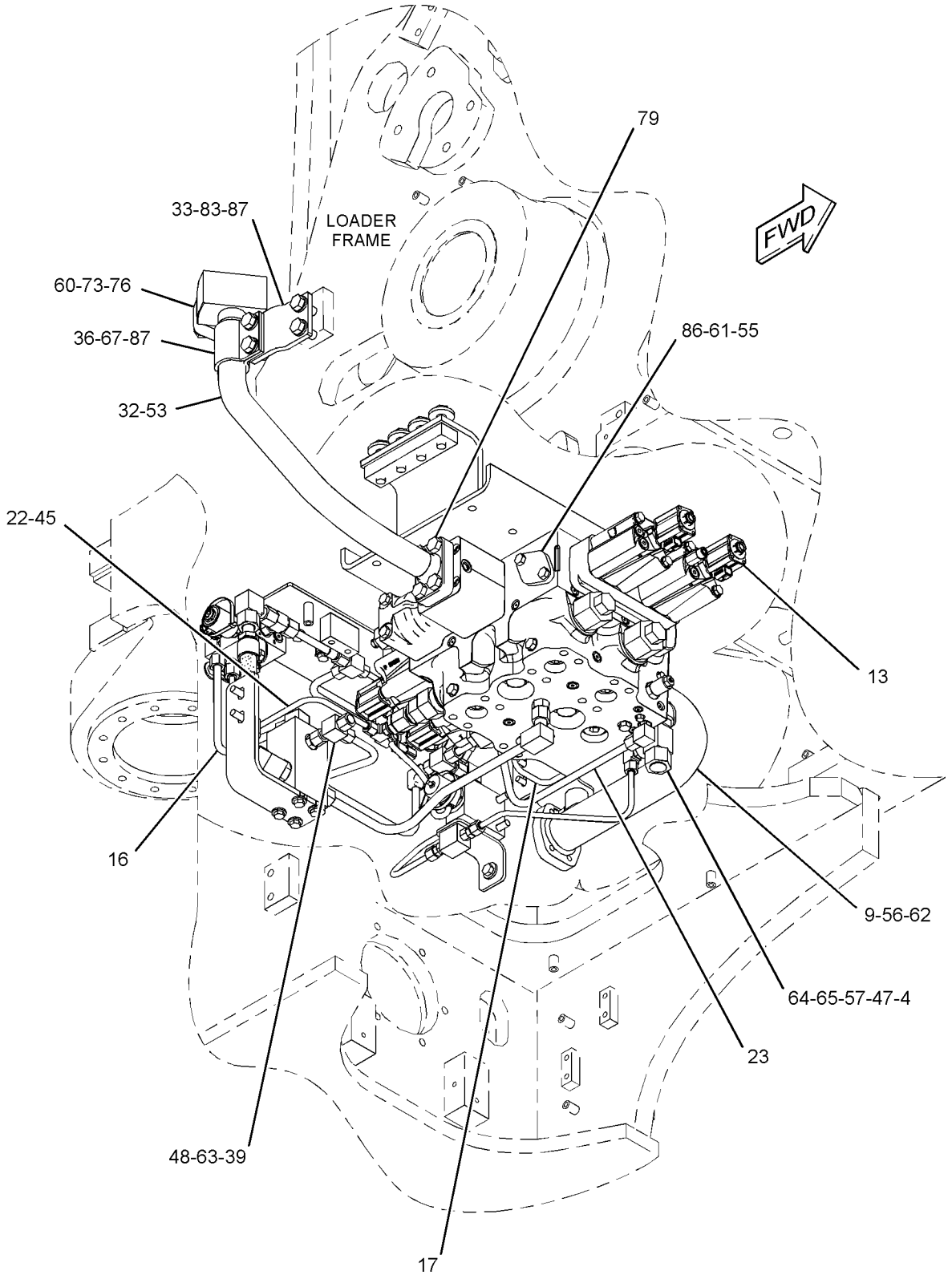

GRAPHIC #1 g02044942

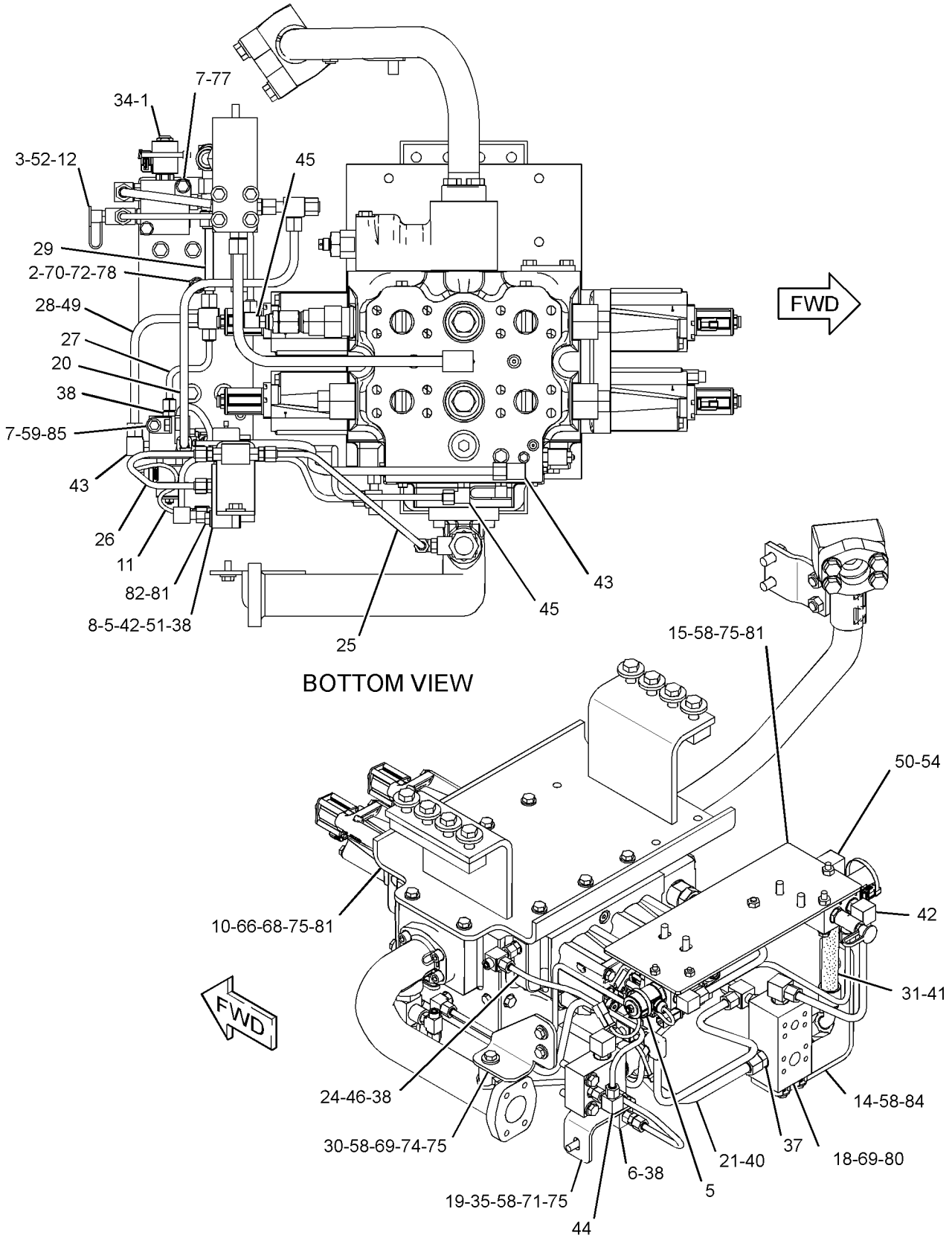

GRAPHIC #2 **<END>** g02044943

HYDRAULIC SYSTEM

315-8830 VALVE & MTG GP-MAIN CONTROL

S/N: BXY4000-UP
PART OF 298-6963, 298-6965 LIFT AR
AN ATTACHMENT

SMCS-5051 **i03765142**

NOTE	REF NO	GRAPHIC REF	PART NUMBER	QTY	PART NAME 1 2 3 4 5 6 (PRODUCT LEVEL)	SEE PAGE
	1	2	*3J-3679*	1	PLUG AS	
		2	**1J-9671**	1	SEAL-O-RING	
		2	**9S-8003**	1	PLUG	
	2	2	**6H-7062**	1	SPACER (13.5X25X19-MM THK)	
	3	2	**6V-0852**	1	CAP-DUST	
	4	1	**8T-1674**	1	TEE	
	5	2	**9X-6772**	2	STRAP-CABLE	
Y	6	2	**112-1817**	1	VALVE GP-MANUAL	1636
	7	2	**124-3019**	2	BRACKET AS	
					(EACH INCLUDES)	
M		2	**8T-3490**	1	NUT-WELD (M10X1.5-THD)	
Y	8	2	**151-7455**	1	VALVE GP-SOLENOID (24-VOLT)	1658
	9	1	**153-6293**	1	ELBOW	
	10	2	**154-5512**	1	BRACKET AS	
Y	11	2	**173-7455**	1	VALVE GP-SOLENOID (LOAD SENSING)	1660
	12	2	**196-2036**	1	TEE AS	
Y	13	1	**291-8508**	1	VALVE GP-CONTROL	1609
	14	2	**308-4925**	1	SPACER	
	15	2	**315-8852**	1	BRACKET	
	16	2	**315-8854**	1	PLATE AS	
M		2	**7X-0752**	1	BOSS-WELD (M10X1.5X65-MM OAL)	
M		2	**8T-3490**	3	NUT-WELD (M10X1.5-THD)	
M		2	**8T-3612**	2	NUT-WELD (M8X1.25-THD)	
M		2	**8T-4935**	2	BOSS-WELD (M10X1.5X45-MM)	
	17	1	**315-8857**	1	TUBE AS	
	18	1	**315-8858**	1	TUBE AS	
	19	2	**315-8859**	1	MANIFOLD	
	20	2	**315-8861**	1	BRACKET	
	21	2	**315-8862**	1	TUBE AS	
	22	2	**315-8863**	1	TUBE AS	
	23	1	**315-8864**	1	TUBE AS	
	24	1	**315-8866**	1	TUBE AS	
	25	2	**315-8867**	1	TUBE AS	
	26	2	**315-8868**	1	TUBE AS	
	27	2	**315-8869**	1	TUBE AS	
	28	2	**315-8871**	1	TUBE AS	
	29	2	**315-8872**	1	TUBE AS	
	30	2	**315-8873**	1	TUBE AS	
	31	2	**315-8994**	1	BRACKET	
I	32	2	**315-9326**	1	HOSE AS	
	33	1	**315-9425**	1	TUBE AS	
	34	1	**315-9485**	1	BRACKET AS	
M		1	**9X-6269**	2	NUT-WELD (M16X2-THD)	
Y	35	2	**322-3793**	1	MANIFOLD GP-CONTROL	1538
	36	2	**096-6166**	4	WASHER-HARD (4.5X9X1-MM THK)	
	37	1	**103-1303**	2	CLAMP-HALF	
	38	2	*148-8315*	1	CONNECTOR AS	
		2	**2M-9780**	1	SEAL-O-RING	
		2	**6V-8642**	1	CONNECTOR	
		2	**7J-9108**	1	SEAL-O-RING	
	39	2	*148-8336*	6	CONNECTOR AS	
					(EACH INCLUDES)	
		2	**3J-1907**	1	SEAL-O-RING	
		2	**6V-8397**	1	SEAL-O-RING	
		2	**6V-8636**	1	CONNECTOR	

HYDRAULIC SYSTEM

315-8830 VALVE & MTG GP-MAIN CONTROL *(contd.)* i03765142

NOTE	REF NO	GRAPHIC REF	PART NUMBER	QTY	PART NAME 1 2 3 4 5 6 (PRODUCT LEVEL)	SEE PAGE
	40	1	*148-8340*	1	CONNECTOR AS	
		1	**3K-0360**	1	SEAL-O-RING	
		1	**6V-8398**	1	SEAL-O-RING	
		1	**6V-8639**	1	CONNECTOR	
	41	2	*148-8342*	1	CONNECTOR AS	
		2	**3K-0360**	1	SEAL-O-RING	
		2	**6V-8632**	1	CONNECTOR	
		2	**7J-9108**	1	SEAL-O-RING	
	42	2	*148-8347*	1	ELBOW AS	
		2	**3D-2824**	1	SEAL-O-RING	
		2	**6V-9007**	1	ELBOW	
		2	**6V-9746**	1	SEAL-O-RING	
	43	2	*148-8364*	3	ELBOW AS	
					(EACH INCLUDES)	
		2	**3K-0360**	1	SEAL-O-RING	
		2	**6V-8398**	1	SEAL-O-RING	
		2	**6V-8625**	1	ELBOW	
	44	2	*148-8365*	1	ELBOW AS	
		2	**3J-1907**	1	SEAL-O-RING	
		2	**6V-8398**	1	SEAL-O-RING	
		2	**8T-6876**	1	ELBOW	
	45	2	*148-8367*	1	ELBOW AS	
		2	**6V-8397**	1	SEAL-O-RING	
		2	**6V-9850**	1	ELBOW	
	46	1,2	*148-8378*	4	ELBOW AS	
					(EACH INCLUDES)	
		1,2	**3J-1907**	1	SEAL-O-RING	
		1,2	**6V-8397**	1	SEAL-O-RING	
		1,2	**6V-8724**	1	ELBOW	
	47	2	*148-8433*	1	TEE AS	
		2	**6V-8397**	2	SEAL-O-RING	
		2	**6V-9836**	1	TEE-SWIVEL	
	48	1	*148-8439*	1	TEE AS	
		1	**3J-1907**	1	SEAL-O-RING	
		1	**6V-8397**	2	SEAL-O-RING	
		1	**6V-8774**	1	TEE	
	49	1	*148-8444*	1	TEE AS-SWIVEL	
		1	**6V-8398**	2	SEAL-O-RING	
		1	**6V-9837**	1	TEE-SWIVEL	
	50	2	*148-8452*	1	TEE AS	
		2	**6V-8397**	1	SEAL-O-RING	
		2	**6V-8398**	2	SEAL-O-RING	
		2	**8T-2363**	1	TEE-UNION	
	51	2	*150-3035*	1	ELBOW AS	
		2	**6V-9746**	1	SEAL-O-RING	
		2	**8T-1718**	1	ELBOW	
	52	2	*150-4037*	1	TEE AS	
		2	**6V-8398**	2	SEAL-O-RING	
		2	**6V-9844**	1	TEE-SWIVEL	
	53	2	*164-5567*	1	COUPLER AS-QUICK DISCONNECT	
		2	**6V-3965**	1	FITTING (QUICK DISCONNECT)	
		2	**214-7568**	1	SEAL-O-RING	
	54	1,2	**1P-3706**	2	SEAL-RECTANGULAR	
	55	2	*296-5725*	1	TEE AS	
		2	**3K-0360**	1	SEAL-O-RING	
		2	**7J-9108**	2	SEAL-O-RING	
		2	**109-5811**	1	TEE-O-RING PORT	
	56	1	**4J-0527**	1	SEAL-O-RING	
	57	1	**5K-9090**	1	SEAL-O-RING	

315-8830 VALVE & MTG GP-MAIN CONTROL *(contd.)* i03765142

NOTE	REF NO	GRAPHIC REF	PART NUMBER	QTY	PART NAME 1 2 3 4 5 6 (PRODUCT LEVEL)	SEE PAGE
	58	2	**5P-1076**	6	WASHER-HARD (13.5X30X4-MM THK)	
	59	2	**5P-4116**	2	WASHER-HARD (8.8X20.5X2-MM THK)	
	60	1	**5P-8077**	2	FLANGE-HALF	
M	61	1	**6V-8200**	4	BOLT-SOCKET HEAD (M12X1.75X35-MM)	
	62	1	**6V-9830**	1	CAP AS	
	63	1	**6V-9833**	1	CAP AS	
	64	1	**7M-8485**	1	SEAL-O-RING	
	65	2	**7X-0583**	8	WASHER-HARD (17X45X6-MM THK)	
M	66	1	**7X-2553**	2	BOLT (M16X2X40-MM)	
M	67	2	**7X-2554**	8	BOLT (M16X2X70-MM)	
M	68	1	**7X-2557**	4	BOLT (M16X2X140-MM)	
	69	2	**7X-7729**	6	WASHER (11X25X3-MM THK)	
	70	2	**8M-2770**	1	CLIP	
M	71	2	**8T-0285**	4	SCREW-MACHINE (M4X0.7X12-MM)	
	72	2	**8T-4121**	3	WASHER-HARD (11X21X2.5-MM THK)	
	73	1	**8T-4122**	8	WASHER-HARD (17X32X3.5-MM THK)	
M	74	2	**8T-4136**	2	BOLT (M10X1.5X25-MM)	
M	75	2	**8T-4139**	18	BOLT (M12X1.75X30-MM)	
M	76	1	**8T-4140**	4	BOLT (M16X2X60-MM)	
M	77	2	**8T-4172**	2	BOLT (M10X1.5X80-MM)	
M	78	2	**8T-4186**	1	BOLT (M10X1.5X40-MM)	
M	79	2	**8T-4195**	4	BOLT (M10X1.5X30-MM)	
	80	2	**8T-4223**	16	WASHER-HARD (13.5X25.5X3-MM THK)	
M	81	2	**8T-4648**	2	BOLT (M12X1.75X70-MM)	
M	82	1	**8T-4779**	2	BOLT (M16X2X35-MM)	
M	83	2	**8T-4956**	2	BOLT (M12X1.75X35-MM)	
M	84	2	**8T-6869**	2	BOLT (M8X1.25X60-MM)	
	85	1	**9X-8257**	4	WASHER (17.5X30X3.5-MM THK)	

I-REFER TO HYDRAULIC INFORMATION SYSTEM
M-METRIC PART
Y-SEPARATE ILLUSTRATION

315-8830 VALVE & MTG GP-MAIN CONTROL *(contd.)* i03765142

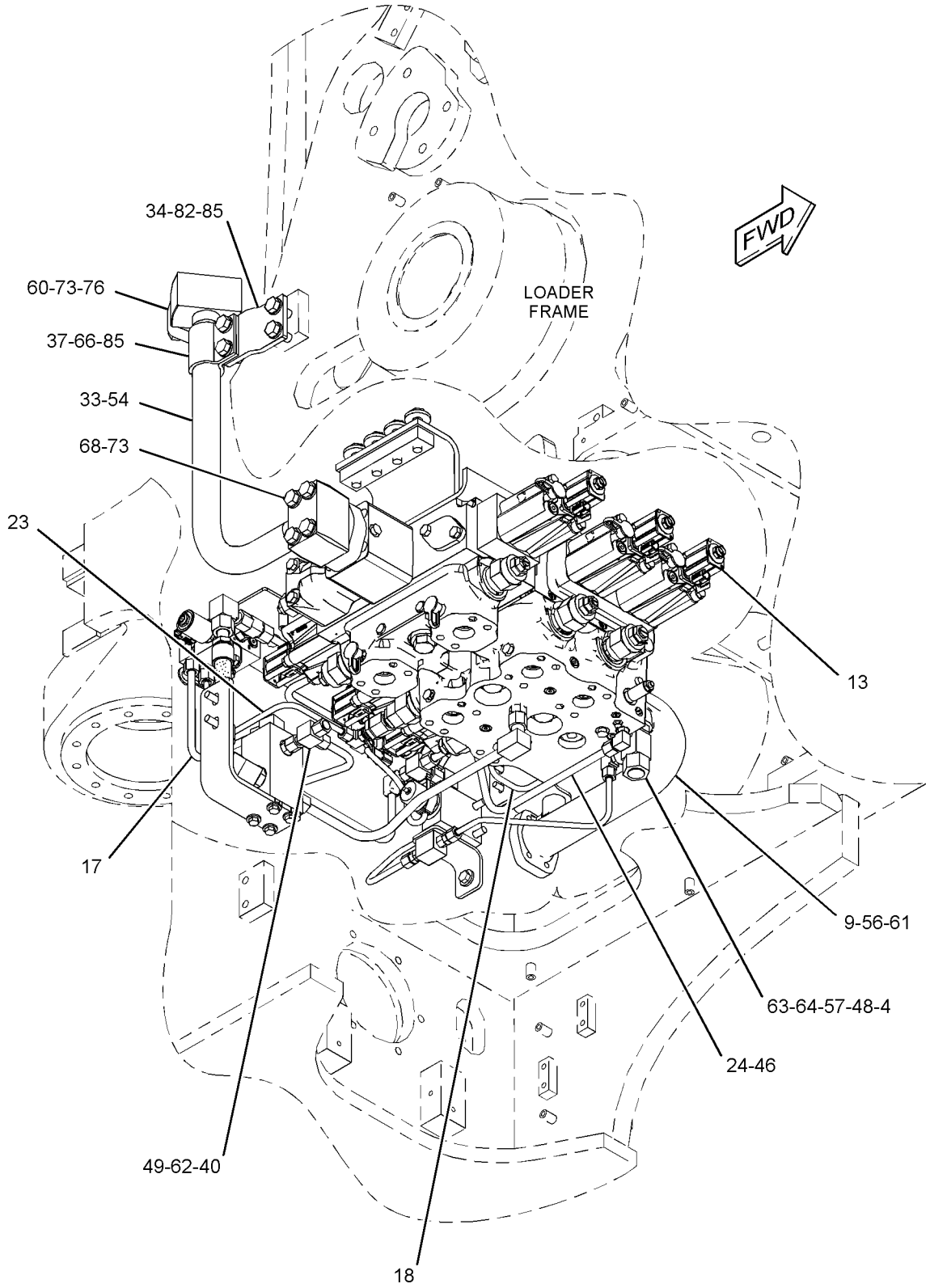

GRAPHIC #1 g02044474

315-8830 **VALVE & MTG GP-MAIN CONTROL** *(contd.)* **i03765142**

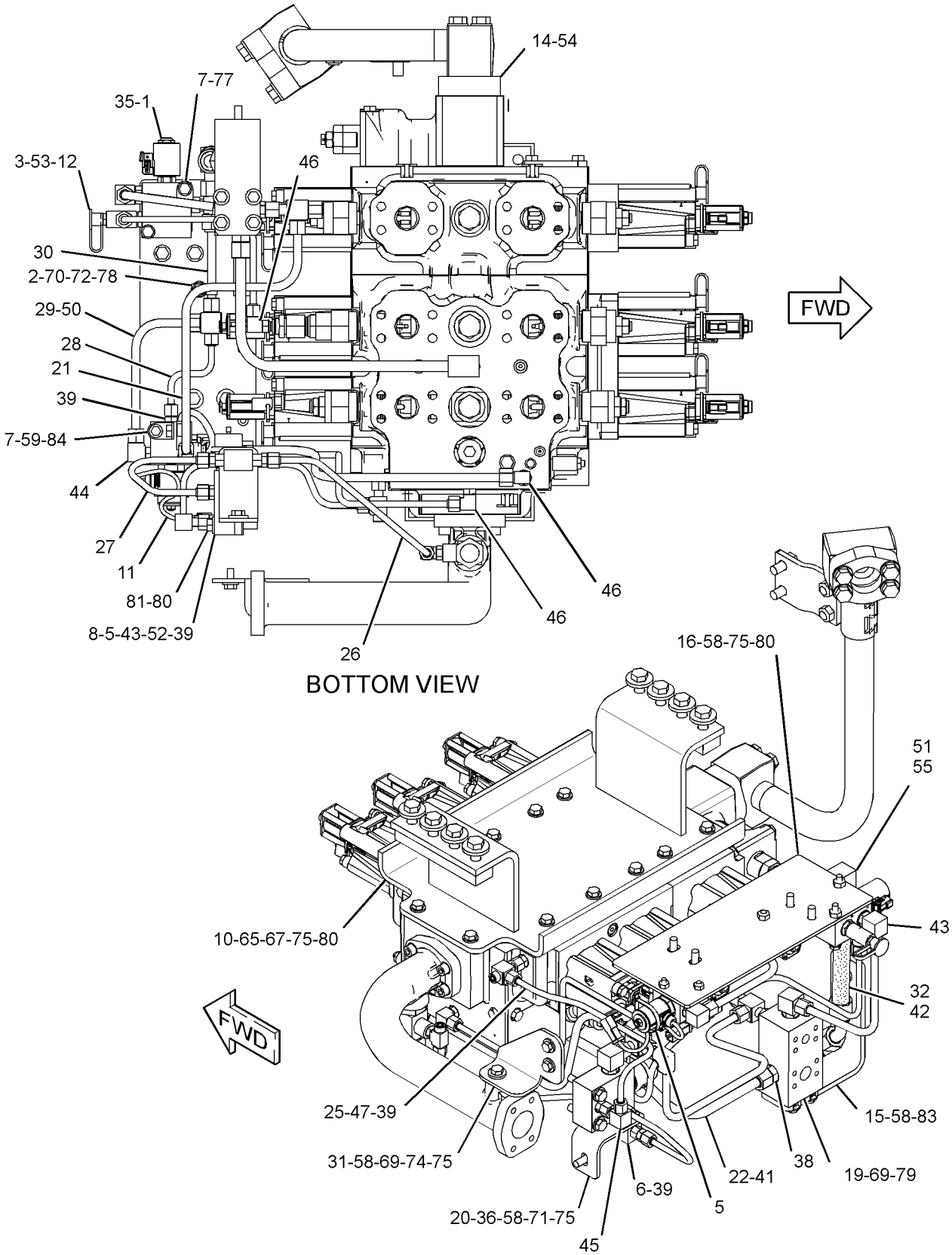

GRAPHIC #2 **<END>** g02044475

HYDRAULIC SYSTEM

253-4788 VALVE & MTG GP-REGENERATION—TILT CYLINDER

S/N: BXY1-UP

PART OF 275-7838, 290-5780 HYDRAULIC AR-TILT REGENERATION

SMCS-512R **i02463709**

NOTE	REF NO	GRAPHIC REF	PART NUMBER	QTY	PART NAME 1 2 3 4 5 6 (PRODUCT LEVEL)	SEE PAGE
	1	1	**6Y-8112**	6	SPACER (17X25X14-MM THK)	
	2	1	**271-4571**	1	SUPPORT AS	
	3	1	**271-4594**	1	BRACKET AS	
Y	4	1	**273-2130**	1	VALVE GP-REGENERATION (TILT CYLINDER)	1640
M	5	1	**8T-4184**	6	BOLT (M12X1.75X45-MM)	
	6	1	**8T-4223**	9	WASHER-HARD (13.5X25.5X3-MM THK)	
M	7	1	**8T-5412**	3	BOLT (M12X1.75X140-MM)	

M-METRIC PART
Y-SEPARATE ILLUSTRATION

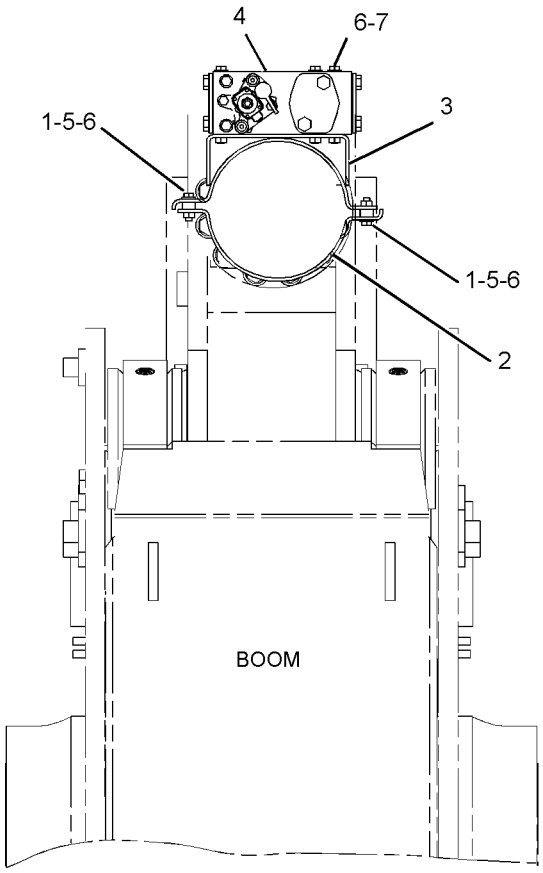

FRONT VIEW

GRAPHIC #1 **<END>** g01258379

HYDRAULIC SYSTEM

271-4577 VALVE & MTG GP-REGENERATION

S/N: BXY1-UP

PART OF 275-7840 HYDRAULIC AR-TILT REGENERATION

SMCS-512R **i03323462**

NOTE	REF NO	GRAPHIC REF	PART NUMBER	QTY	PART NAME 1 2 3 4 5 6 (PRODUCT LEVEL)	SEE PAGE
	1	1	**145-5181**	6	SPACER (13.5X25X12-MM THK)	
	2	1	**271-4593**	1	BRACKET AS	
Y	3	1	**273-2130**	1	VALVE GP-REGENERATION (TILT CYLINDER)	1640
	4	1	**291-3012**	1	SUPPORT AS	
M	5	1	**8T-4184**	6	BOLT (M12X1.75X45-MM)	
	6	1	**8T-4223**	9	WASHER-HARD (13.5X25.5X3-MM THK)	
M	7	1	**8T-5412**	3	BOLT (M12X1.75X140-MM)	

M-METRIC PART
Y-SEPARATE ILLUSTRATION

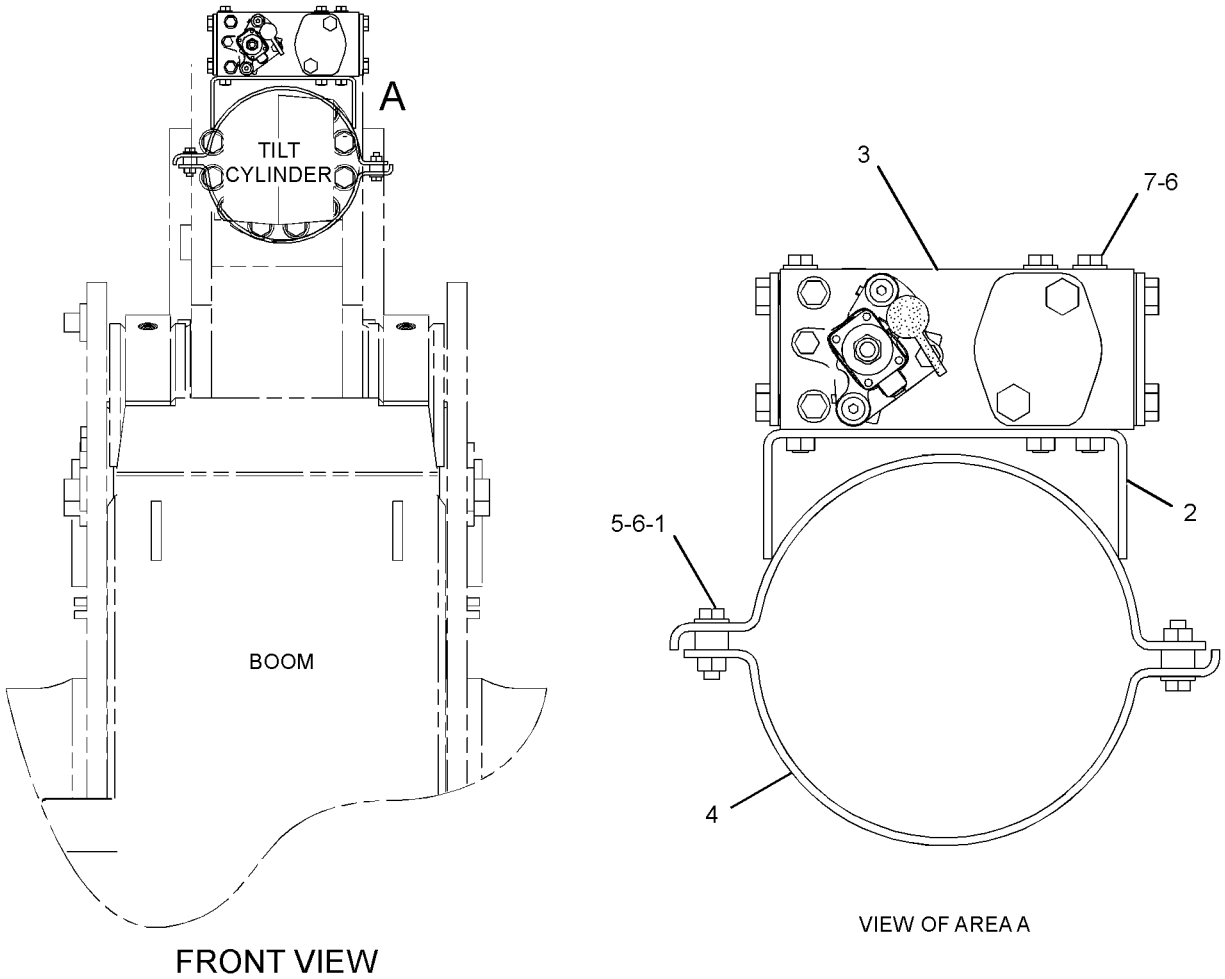

GRAPHIC #1 **<END>** g01349602

HYDRAULIC SYSTEM

4T-5896 VALVE GP-CHECK

S/N: BXY4000-UP
PART OF 222-4436, 291-8508 VALVE GP-CONTROL
AN ATTACHMENT

SMCS-5067 **i01596268**

NOTE	REF NO	GRAPHIC REF	PART NUMBER	QTY	PART NAME 1 2 3 4 5 6 (PRODUCT LEVEL)	SEE PAGE
	1	1	**5H-1472**	1	BALL	
	2	1	**9G-0278**	1	SPRING	
	3	1	**3J-1907**	1	SEAL-O-RING	
	4	1	**4T-5071**	1	RING-BACKUP	
	5	1	**8C-3085**	1	SEAL-O-RING	
	6	1	**8L-6565**	1	PIN-SPRING	

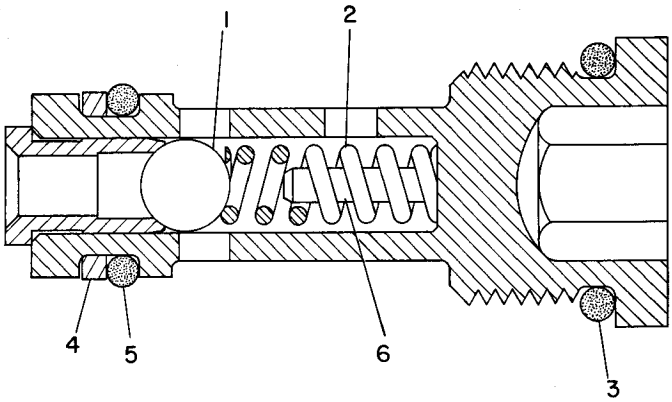

GRAPHIC #1 **<END>** g00124639

HYDRAULIC SYSTEM

9T-3096 VALVE GP-CHECK—PILOT

S/N: BXY1-UP

PART OF 132-6142 LINES GP-STEERING NEUTRALIZER, 132-6133, 201-0218, 298-2500, 298-2501 VALVE & MTG GP-MAIN CONTROL

ALSO AN ATTACHMENT

SMCS-4275, 5067 **i03410623**

NOTE	REF NO	GRAPHIC REF	PART NUMBER	QTY	PART NAME 1 2 3 4 5 6 (PRODUCT LEVEL)	SEE PAGE
					(NO SERVICED PARTS)	

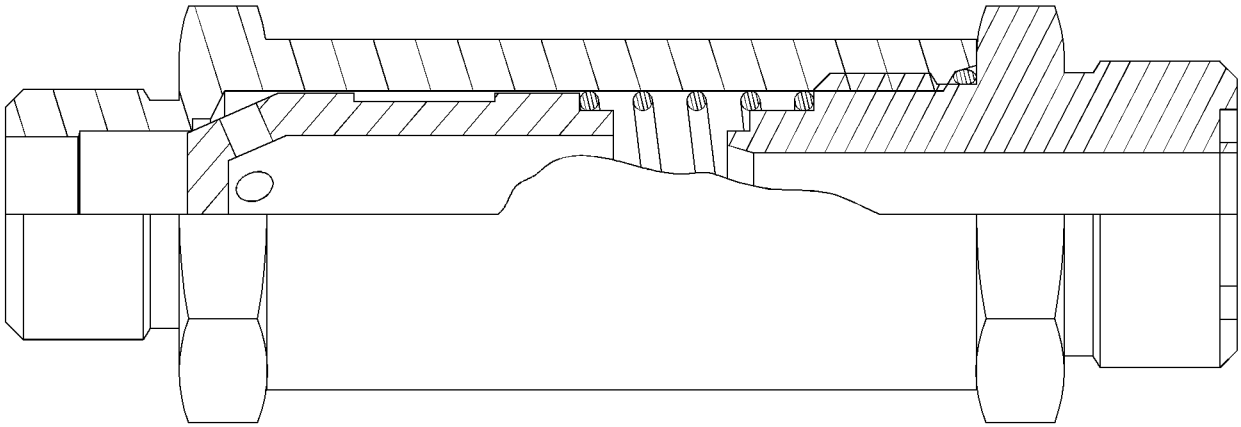

GRAPHIC #1 **<END>** g01770194

HYDRAULIC SYSTEM

222-4436 VALVE GP-CONTROL

S/N: BXY4000-UP
PART OF 315-8815 VALVE & MTG GP-MAIN CONTROL
AN ATTACHMENT

SMCS-5051 **i03815634**

NOTE	REF NO	GRAPHIC REF	PART NUMBER	QTY	PART NAME 1 2 3 4 5 6 (PRODUCT LEVEL)	SEE PAGE
Y	1	1	**217-6719**	2	ACTUATOR GP-PILOT CONTROL (PROPORTIONAL SOLENOID)	1399
Y	2	1	**217-6720**	2	ACTUATOR GP-PILOT CONTROL (PROPORTIONAL SOLENOID)	1403
	3	3	**4B-4158**	4	SCREW-DRIVE (4X0.25-IN)	
Y	4	2	**4T-1860**	1	VALVE GP-SHUTTLE	1387
Y	5	1	**4T-5896**	1	VALVE GP-CHECK	1602
	6	3	**6E-1291**	1	VALVE	
	7	3	**6V-0852**	1	CAP-DUST	
	8	3	**7J-7852**	1	SPRING	
	9	1,2	**9L-9188**	2	SPRING-VALVE	
	10	1,2	**102-4156**	2	VALVE	
	11	1,2	**102-4158**	2	PLUG AS	
					(EACH INCLUDES)	
		1,2	**3G-5003**	1	BEARING-SLEEVE	
		1,2	**102-4157**	1	PLUG	
	12	1	**112-8244**	1	HOUSING	
	13	1,2	**113-8263**	2	PISTON	
Y	14	1	**117-0160**	1	VALVE GP-RELIEF (LINE RELIEF, TILT CYL HEAD END)	1642
Y	15	2	**129-8293**	1	VALVE GP-RELIEF (LINE RELIEF, LIFT CYL ROD END)	1645
Y	16	2	**185-1897**	1	VALVE GP-PRESSURE REDUCING	1637
	17	3	**203-8482**	1	MANIFOLD	
	22	1	**334-0895**	1	VALVE GP-RELIEF (LINE RELIEF, TILT CYL ROD END)	
		1	**2S-4078**	1	SEAL-O-RING	
Y	23	1	**334-8332**	1	VALVE GP-RELIEF	1652
M	24	1	**095-9804**	4	BOLT-SOCKET HEAD (M12X1.75X110-MM)	
Y	25	2	**144-0221**	1	VALVE GP-RELIEF (LINE RELIEF, LIFT CYL HEAD END)	1647
	26	3	*148-8406*	3	PLUG AS	
					(EACH INCLUDES)	
		3	**7M-8485**	1	SEAL-O-RING	
		3	**9S-9334**	1	PLUG-O-RING	
	27	1,2,3	*148-8407*	8	PLUG AS	
					(EACH INCLUDES)	
		1,2,3	**3J-1907**	1	SEAL-O-RING	
		1,2,3	**9S-4191**	1	PLUG-O-RING	
	28	2	*155-3624*	2	PLUG AS	
					(EACH INCLUDES)	
		2	**3J-7354**	1	SEAL-O-RING	
		2	**9S-4182**	1	PLUG-O-RING	
	29	3	*162-0177*	4	PLUG AS	
					(EACH INCLUDES)	
		3	**3J-1907**	1	SEAL-O-RING	
		3	**9S-8004**	1	PLUG	
	30	3	*164-5567*	1	COUPLER AS-QUICK DISCONNECT	
		3	**6V-3965**	1	FITTING (QUICK DISCONNECT)	
		3	**214-7568**	1	SEAL-O-RING	
	31	1,3	*173-3993*	2	PLUG AS	
					(EACH INCLUDES)	
		1,3	**4J-7533**	1	SEAL-O-RING	
		1,3	**9S-8001**	1	PLUG-O-RING	
	32	1,2,3	*183-7263*	6	PLUG AS	
					(EACH INCLUDES)	

222-4436 VALVE GP-CONTROL *(contd.)* i03815634

NOTE	REF NO	GRAPHIC REF	PART NUMBER	QTY	PART NAME 1 2 3 4 5 6 (PRODUCT LEVEL)	SEE PAGE
		1,2,3	**3J-7354**	1	SEAL-O-RING	
		1,2,3	**9S-8002**	1	PLUG-O-RING	
	33	1,2	**1H-5728**	6	SEAL-O-RING	
	34	1	**1P-3705**	1	SEAL-RECTANGULAR	
	35	2,3	*207-8218*	6	PLUG AS	
					(EACH INCLUDES)	
		2,3	**7J-0204**	1	SEAL-O-RING	
		2,3	**9S-8007**	1	PLUG	
	36	1,3	*222-4737*	2	PLUG AS	
					(EACH INCLUDES)	
		1,3	**4J-7533**	1	SEAL-O-RING	
		1,3	**9S-4180**	1	PLUG	
	37	1	**2J-6274**	4	SEAL-O-RING	
	38	1,2	**2S-4078**	2	SEAL-O-RING	
	39	1	**4J-0523**	1	SEAL-O-RING	
	40	1	**4J-0525**	1	SEAL-O-RING	
M	41	1	**6V-3668**	2	BOLT (M12X1.75X30-MM)	
M	42	1	**7X-2546**	4	BOLT (M10X1.5X180-MM)	
M	43	1	**7X-2549**	2	BOLT (M12X1.75X100-MM)	
	44	1	**8L-6565**	4	PIN-SPRING	
	45	1	**8T-4121**	12	WASHER-HARD (11X21X2.5-MM THK)	
M	46	1	**8T-5436**	4	BOLT (M10X1.5X130-MM)	
	47	1	**8W-2966**	1	COVER	
	48	1	**9R-5008**	8	SPACER (11X20X6-MM THK)	

M-METRIC PART
Y-SEPARATE ILLUSTRATION

222-4436 VALVE GP-CONTROL *(contd.)* i03815634

REFER TO ALL ILLUSTRATIONS OF
THIS GROUP FOR AUXILIARY VIEWS

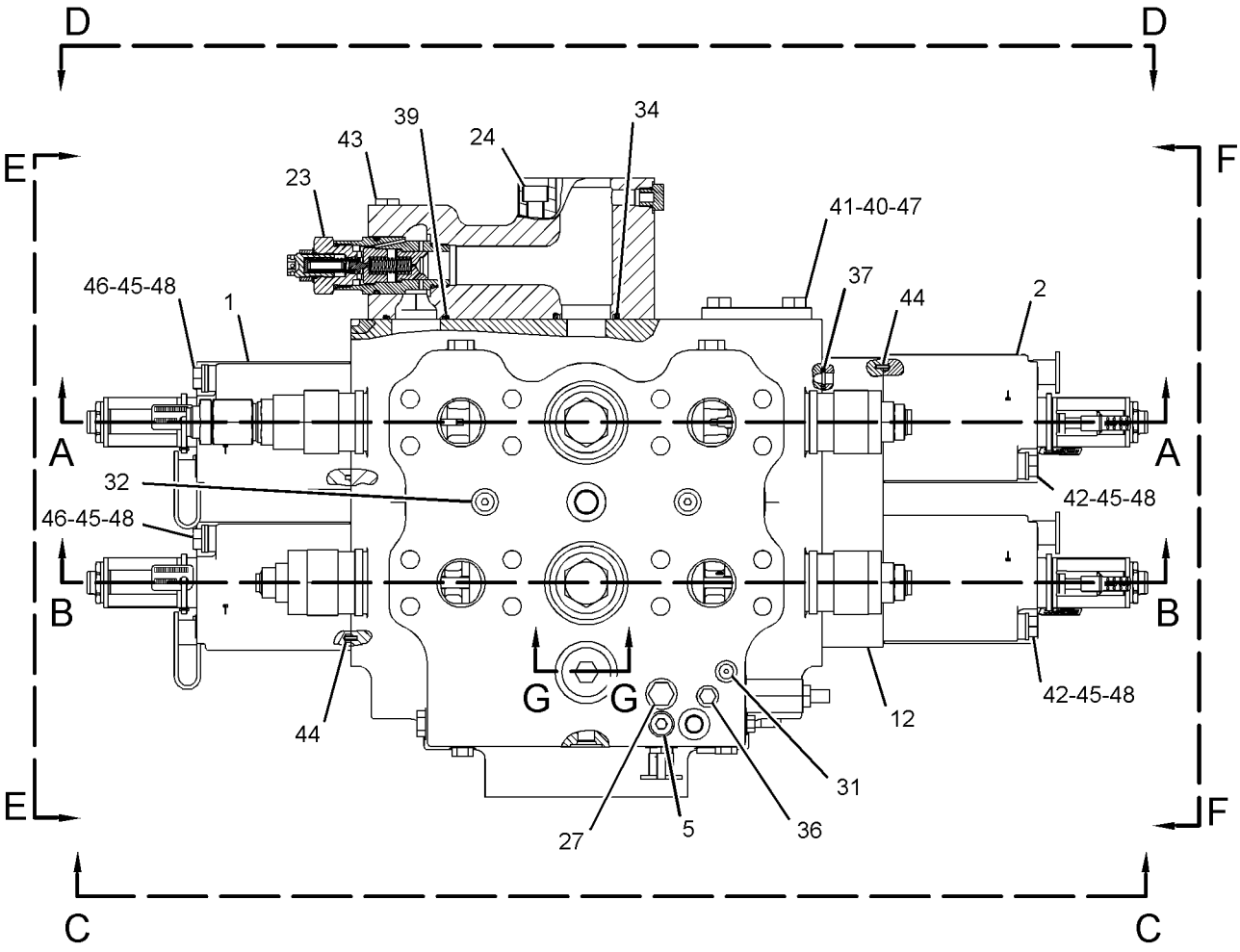

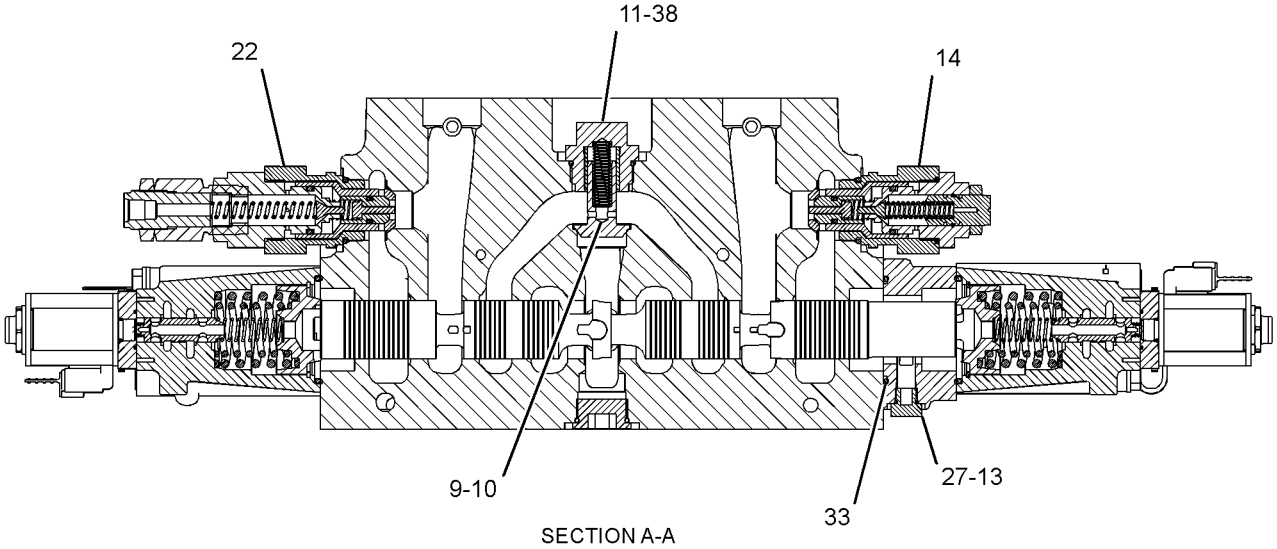

SECTION A-A

GRAPHIC #1 g02046516

222-4436 VALVE GP-CONTROL *(contd.)* **i03815634**

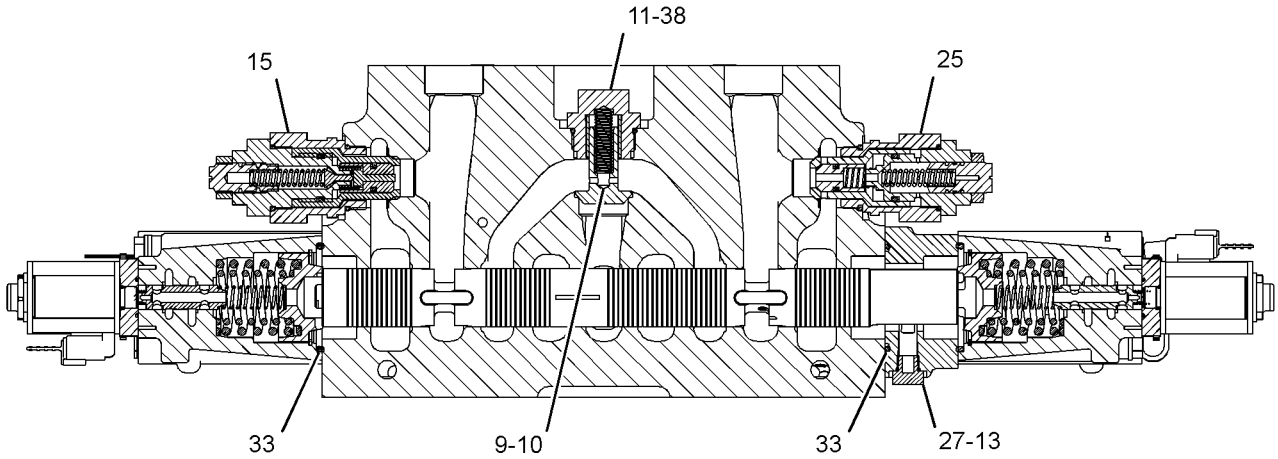

SECTION B-B

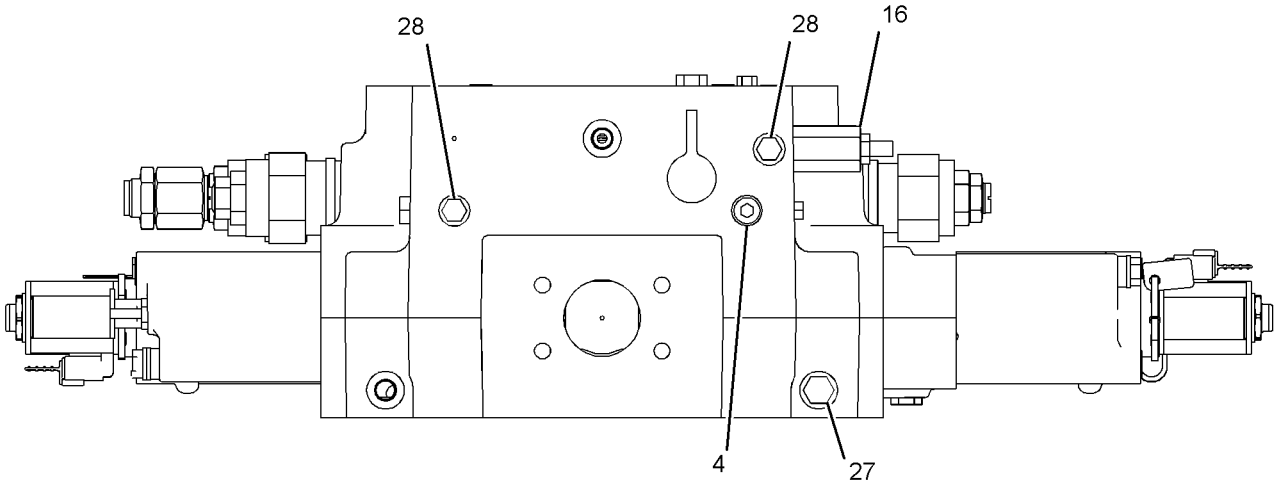

VIEW C-C

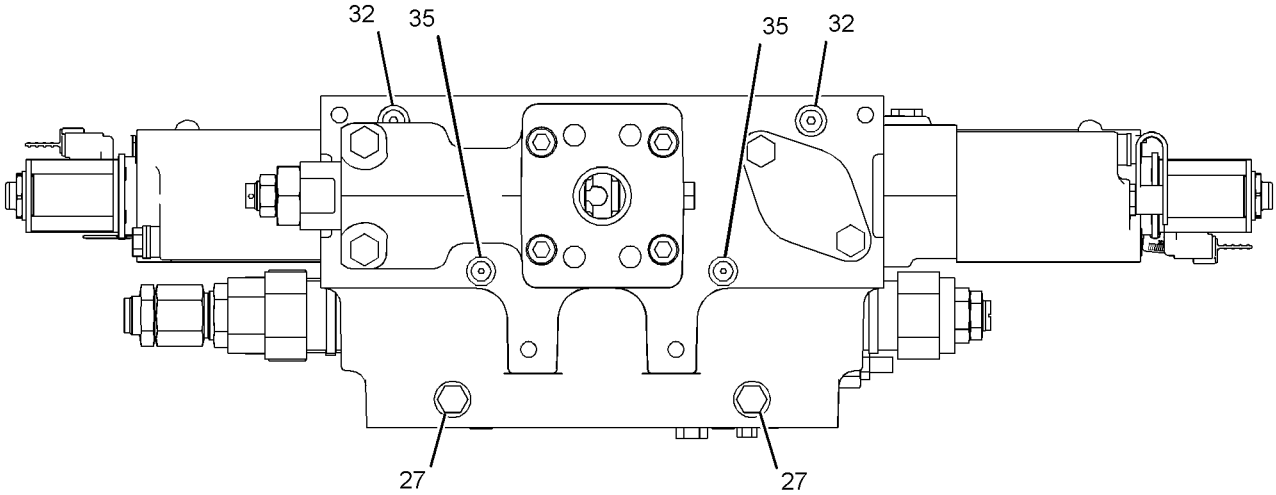

VIEW D-D

GRAPHIC #2 g02046517

222-4436 VALVE GP-CONTROL *(contd.)* **i03815634**

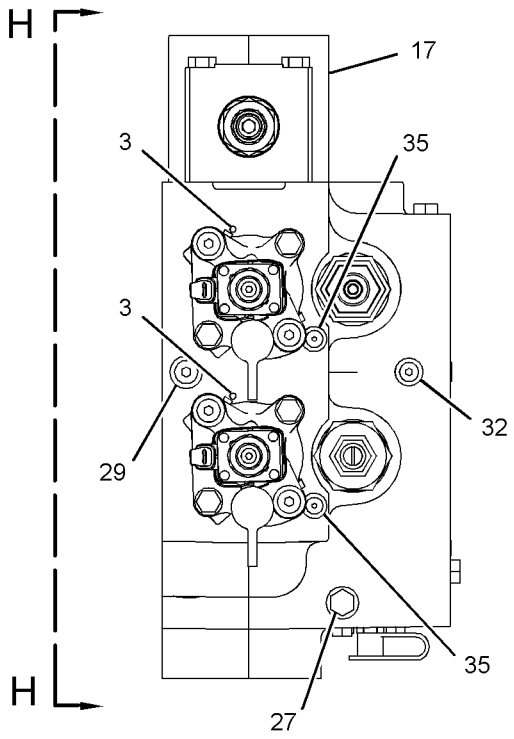

VIEW E-E

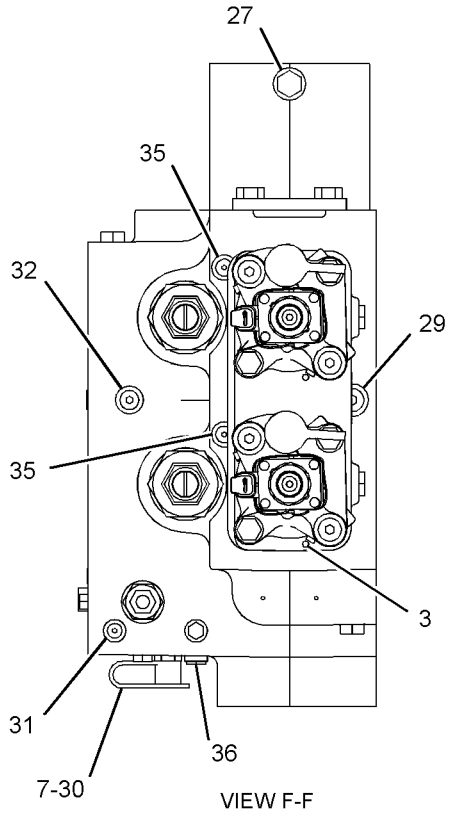

VIEW F-F

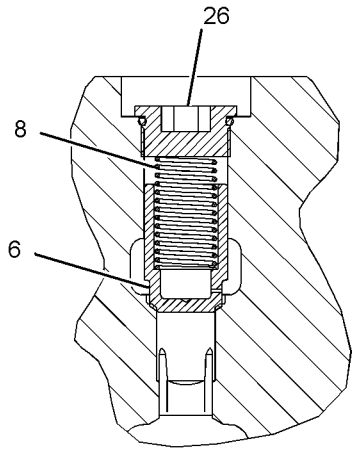

SECTION G-G

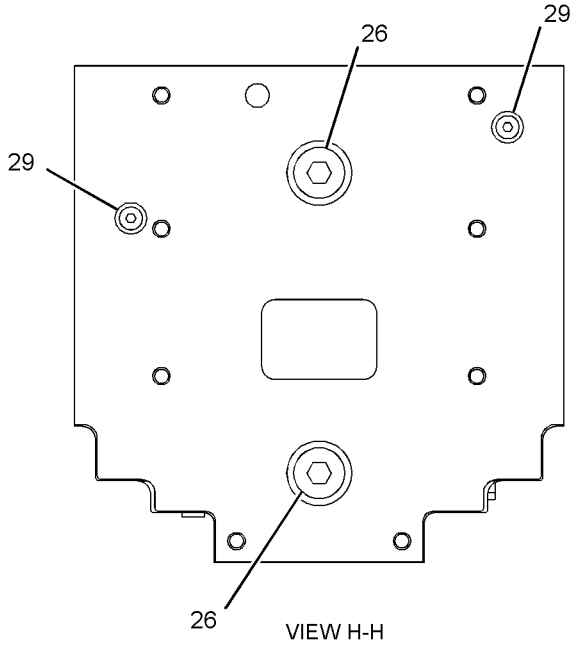

VIEW H-H

GRAPHIC #3 **<END>** g02046518

HYDRAULIC SYSTEM

291-8508 VALVE GP-CONTROL

S/N: BXY4000-UP
PART OF 315-8830 VALVE & MTG GP-MAIN CONTROL
AN ATTACHMENT

SMCS-5051 **i03766453**

NOTE	REF NO	GRAPHIC REF	PART NUMBER	QTY	PART NAME 1 2 3 4 5 6 (PRODUCT LEVEL)	SEE PAGE
	1	1	**4B-4158**	6	SCREW-DRIVE (4X0.25-IN)	
Y	2	3	**4T-1860**	1	VALVE GP-SHUTTLE	1387
Y	3	1	**4T-5896**	1	VALVE GP-CHECK	1602
	4	1	**6E-1291**	1	VALVE	
	5	3	**6E-4286**	1	VALVE GP-PRESSURE REDUCING	
	6	1	**6V-0852**	3	CAP-DUST	
	7	1	**7J-7852**	1	SPRING	
	8	2	**9L-9188**	3	SPRING-VALVE	
	9	2	**102-4156**	3	VALVE	
	10	2	*102-4158*	3	PLUG AS	
					(EACH INCLUDES)	
		2	**3G-5003**	1	BEARING-SLEEVE	
		2	**102-4157**	1	PLUG	
	11	1	**112-8244**	1	HOUSING	
	12	2	**113-8263**	3	PISTON	
Y	13	2	**117-0160**	1	VALVE GP-RELIEF (LINE RELIEF, TILT CYL HEAD END)	1642
Y	14	2	**129-8293**	1	VALVE GP-RELIEF (LINE RELIEF, LIFT CYL ROD END)	1645
	17	1	**155-2291**	1	HOUSING	
Y	18	2	**172-5481**	2	VALVE GP-RELIEF (LINE, AUXILIARY)	1648
	19	1	**203-8482**	1	MANIFOLD	
Y	20	1	**217-6719**	3	ACTUATOR GP-PILOT CONTROL (PROPORTIONAL SOLENOID)	1399
Y	21	1	**217-6720**	3	ACTUATOR GP-PILOT CONTROL (PROPORTIONAL SOLENOID)	1403
	26	2	**334-0895**	1	VALVE GP-RELIEF (LINE RELIEF, TILT CYL ROD END)	
Y	27	1	**334-8332**	1	VALVE GP-RELIEF	1652
M	28	3	**095-9804**	4	BOLT-SOCKET HEAD (M12X1.75X110-MM)	
Y	29	2	**144-0221**	1	VALVE GP-RELIEF (LINE RELIEF, LIFT CYL HEAD END)	1647
	30	1,3	*148-8406*	3	PLUG AS	
					(EACH INCLUDES)	
		1,3	**7M-8485**	1	SEAL-O-RING	
		1,3	**9S-9334**	1	PLUG-O-RING	
	31	1,2,3	*148-8407*	9	PLUG AS	
					(EACH INCLUDES)	
		1,2,3	**3J-1907**	1	SEAL-O-RING	
		1,2,3	**9S-4191**	1	PLUG-O-RING	
	32	3	*155-3624*	2	PLUG AS	
					(EACH INCLUDES)	
		3	**3J-7354**	1	SEAL-O-RING	
		3	**9S-4182**	1	PLUG-O-RING	
	33	1,3	*162-0177*	4	PLUG AS	
					(EACH INCLUDES)	
		1,3	**3J-1907**	1	SEAL-O-RING	
		1,3	**9S-8004**	1	PLUG	
	34	1	*164-5567*	3	COUPLER AS-QUICK DISCONNECT	
					(EACH INCLUDES)	
		1	**6V-3965**	1	FITTING (QUICK DISCONNECT)	
		1	**214-7568**	1	SEAL-O-RING	
M	35	1,3	**165-5085**	6	BOLT-SOCKET HEAD (M12X1.75X160-MM)	
	36	1	*173-3993*	2	PLUG AS	
					(EACH INCLUDES)	
		1	**4J-7533**	1	SEAL-O-RING	

291-8508 VALVE GP-CONTROL *(contd.)* i03766453

NOTE	REF NO	GRAPHIC REF	PART NUMBER	QTY	PART NAME 1 2 3 4 5 6 (PRODUCT LEVEL)	SEE PAGE
		1	**9S-8001**	1	PLUG-O-RING	
	37	1,3	*183-7263*	6	PLUG AS	
					(EACH INCLUDES)	
		1,3	**3J-7354**	1	SEAL-O-RING	
		1,3	**9S-8002**	1	PLUG-O-RING	
	38	2	**1H-5728**	3	SEAL-O-RING	
	39	3	**1P-3704**	1	SEAL-RECTANGULAR	
	40	3	**1P-3705**	1	SEAL-RECTANGULAR	
	41	1	*207-8218*	4	PLUG AS	
					(EACH INCLUDES)	
		1	**7J-0204**	1	SEAL-O-RING	
		1	**9S-8007**	1	PLUG	
	42	1	*222-4737*	2	PLUG AS	
					(EACH INCLUDES)	
		1	**4J-7533**	1	SEAL-O-RING	
		1	**9S-4180**	1	PLUG	
	43	1	**2J-6274**	6	SEAL-O-RING	
	44	2	**2S-4078**	3	SEAL-O-RING	
	45	3	**3H-3385**	2	SEAL-O-RING	
	46	1,3	**4J-0523**	4	SEAL-O-RING	
	47	2,3	**5P-8077**	6	FLANGE-HALF	
	48	1	**7J-1592**	1	COVER	
M	49	1	**7X-2546**	6	BOLT (M10X1.5X180-MM)	
M	50	1	**7X-2549**	2	BOLT (M12X1.75X100-MM)	
	51	1	**8L-6565**	6	PIN-SPRING	
	52	1	**8T-4121**	18	WASHER-HARD (11X21X2.5-MM THK)	
	53	2	**8T-4122**	12	WASHER-HARD (17X32X3.5-MM THK)	
M	54	2,3	**8T-4140**	12	BOLT (M16X2X60-MM)	
M	55	1	**8T-4192**	2	BOLT (M12X1.75X25-MM)	
M	56	1	**8T-5436**	6	BOLT (M10X1.5X130-MM)	
	57	1	**9R-5008**	12	SPACER (11X20X6-MM THK)	

M-METRIC PART
Y-SEPARATE ILLUSTRATION

291-8508 VALVE GP-CONTROL *(contd.)* **i03766453**

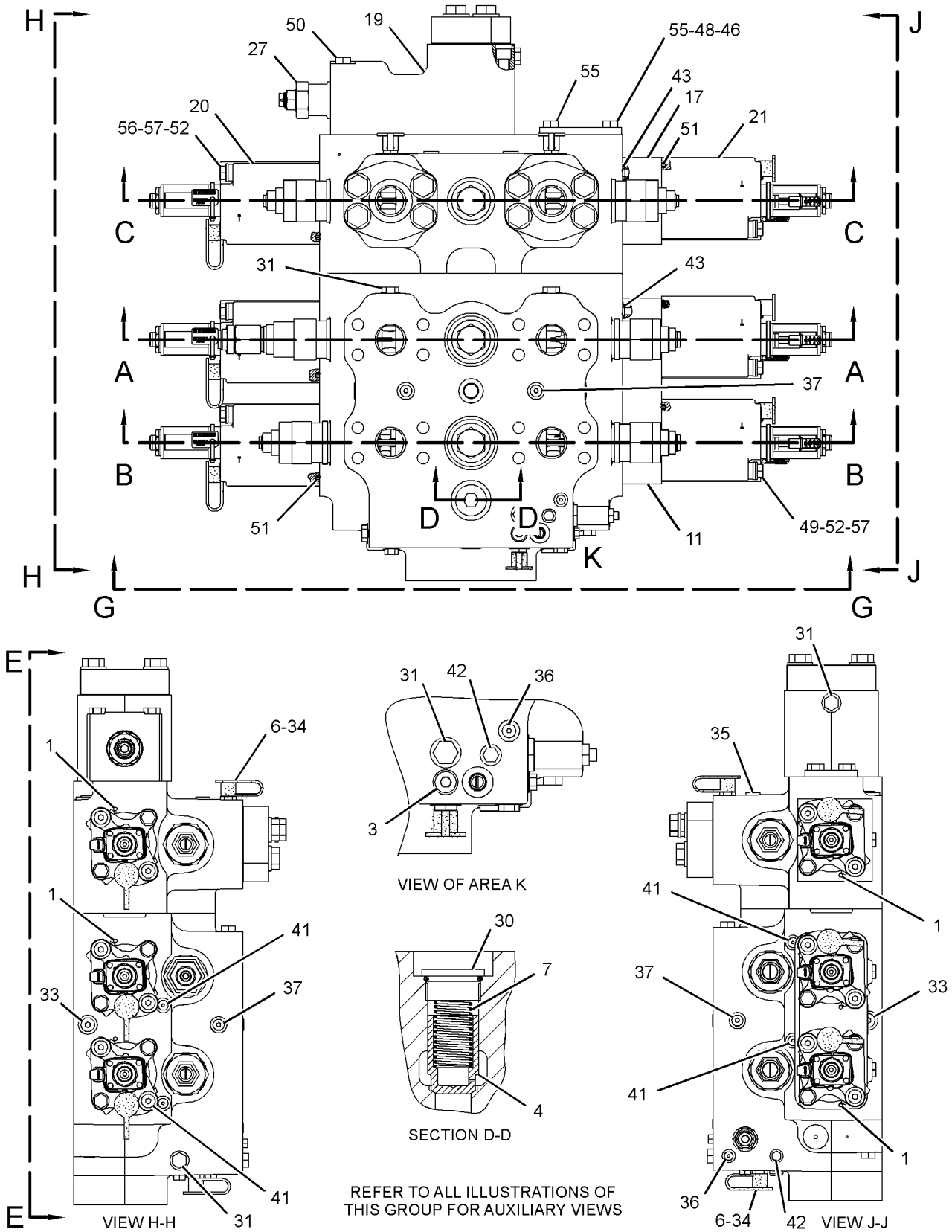

GRAPHIC #1 g02063945

291-8508 VALVE GP-CONTROL *(contd.)* i03766453

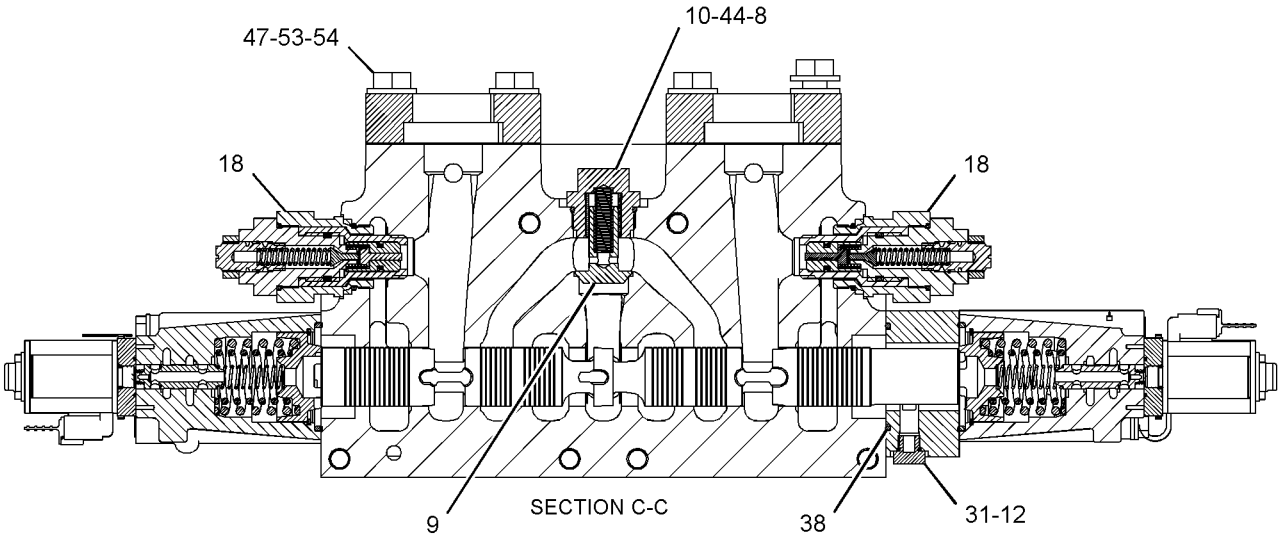

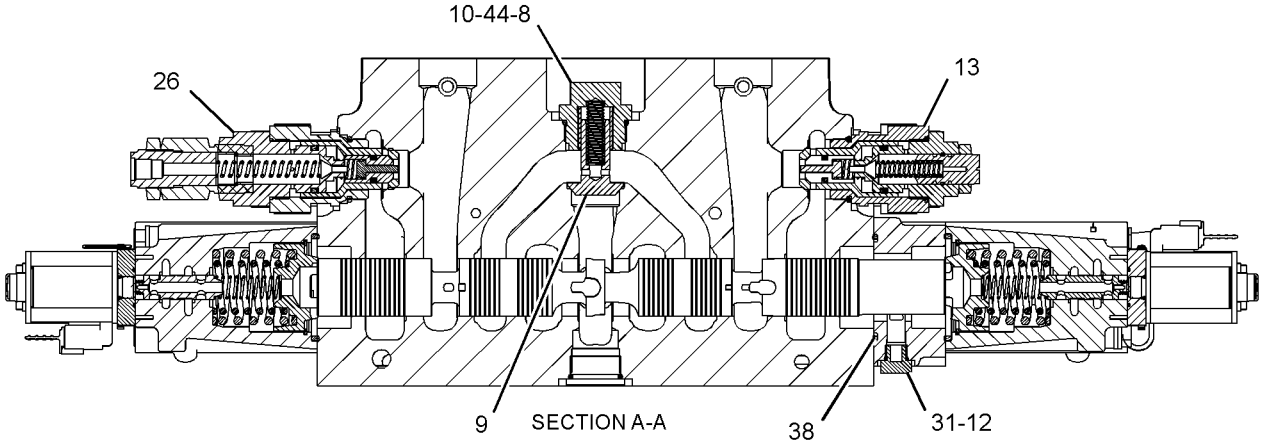

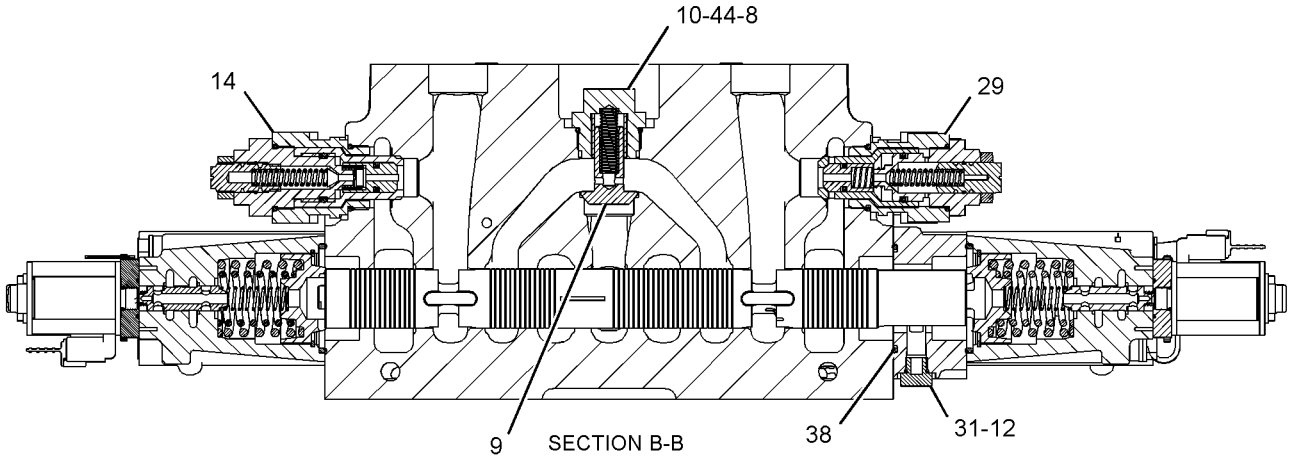

GRAPHIC #2 g02063946

291-8508 VALVE GP-CONTROL *(contd.)* **i03766453**

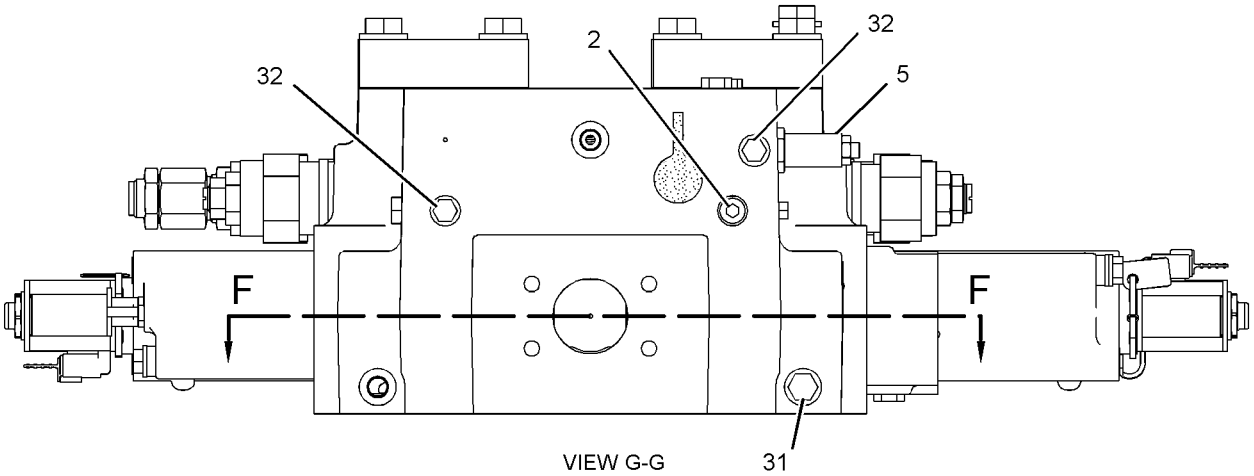

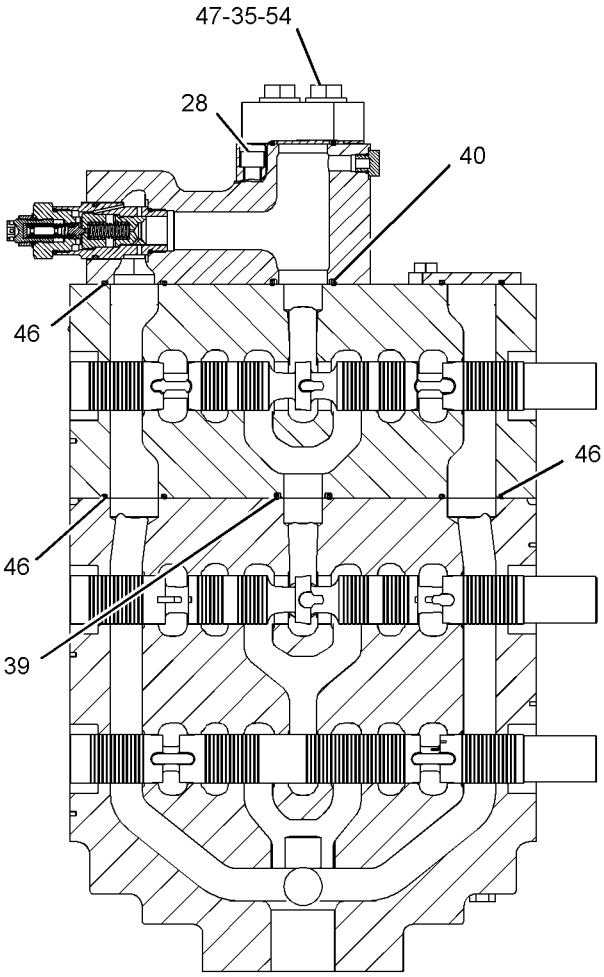

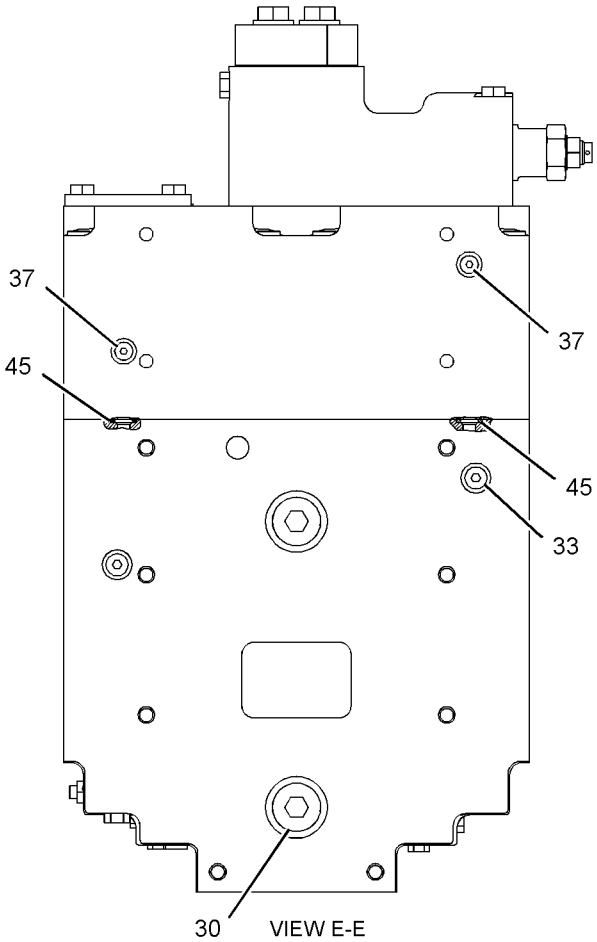

GRAPHIC #3 **<END>** g02063947

HYDRAULIC SYSTEM

318-2925 VALVE GP-CONTROL

S/N: BXY2733-UP

PART OF 296-8265, 296-8268 LINES GP-TILT CYLINDER AN ATTACHMENT

SMCS-5051 **i03370661**

NOTE	REF NO	GRAPHIC REF	PART NUMBER	QTY	PART NAME 1 2 3 4 5 6 (PRODUCT LEVEL)	SEE PAGE
	1	1	**9L-9188**	1	SPRING-VALVE	
	2	1	**153-9990**	1	VALVE	
	3	1	**204-1340**	1	STEM	
Y	4	1	**217-6719**	1	ACTUATOR GP-PILOT CONTROL (PROPORTIONAL SOLENOID)	1399
	5	1	**275-5797**	1	PLATE-COVER	
	8	1	**327-2109**	1	BRACKET AS	
	9	1	**332-2178**	1	PLUG AS	
		1	**6K-6307**	1	SEAL-O-RING	
		1	**153-9989**	1	PLUG	
	10	1	**005-8593**	1	SEAL-O-RING	
	11	1	*162-0177*	1	PLUG AS	
		1	**3J-1907**	1	SEAL-O-RING	
		1	**9S-8004**	1	PLUG	
	12	1	**1P-5767**	4	FLANGE-HALF	
	13	1	**3G-5003**	1	BEARING-SLEEVE	
	14	1	**4B-4158**	1	SCREW-DRIVE (NO 4X0.25-IN)	
	15	1	**5P-8077**	2	FLANGE-HALF	
M	16	1	**7X-2475**	4	BOLT (M16X2X130-MM)	
M	17	1	**7X-2543**	2	BOLT (M10X1.5X120-MM)	
	18	1	**8L-6565**	1	PIN-SPRING	
	19	1	**8T-4121**	4	WASHER-HARD (11X21X2.5-MM THK)	
	20	1	**8T-4122**	8	WASHER-HARD (17X32X3.5-MM THK)	
M	21	1	**8T-4140**	4	BOLT (M16X2X60-MM)	
M	22	1	**8T-4194**	8	BOLT (M12X1.75X50-MM)	
M	23	1	**8T-4195**	4	BOLT (M10X1.5X30-MM)	
	24	1	**8T-4223**	8	WASHER-HARD (13.5X25.5X3-MM THK)	

M-METRIC PART
Y-SEPARATE ILLUSTRATION

318-2925 VALVE GP-CONTROL *(contd.)* **i03370661**

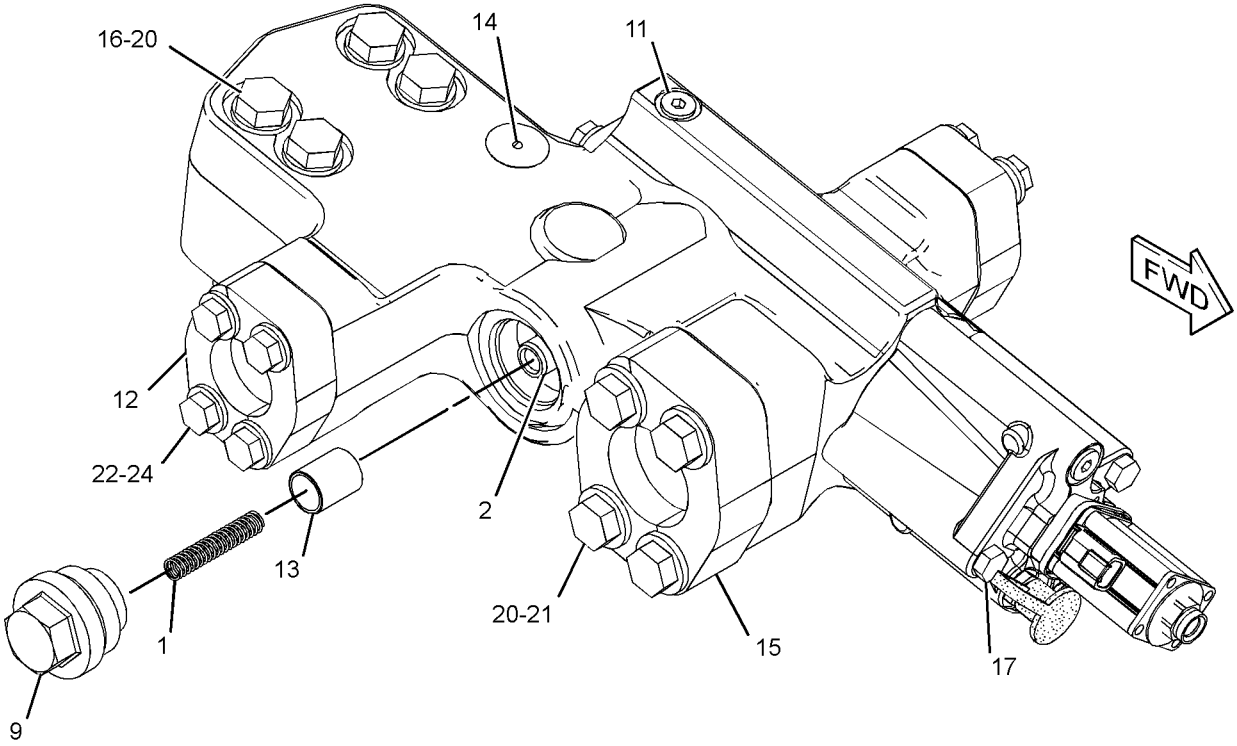

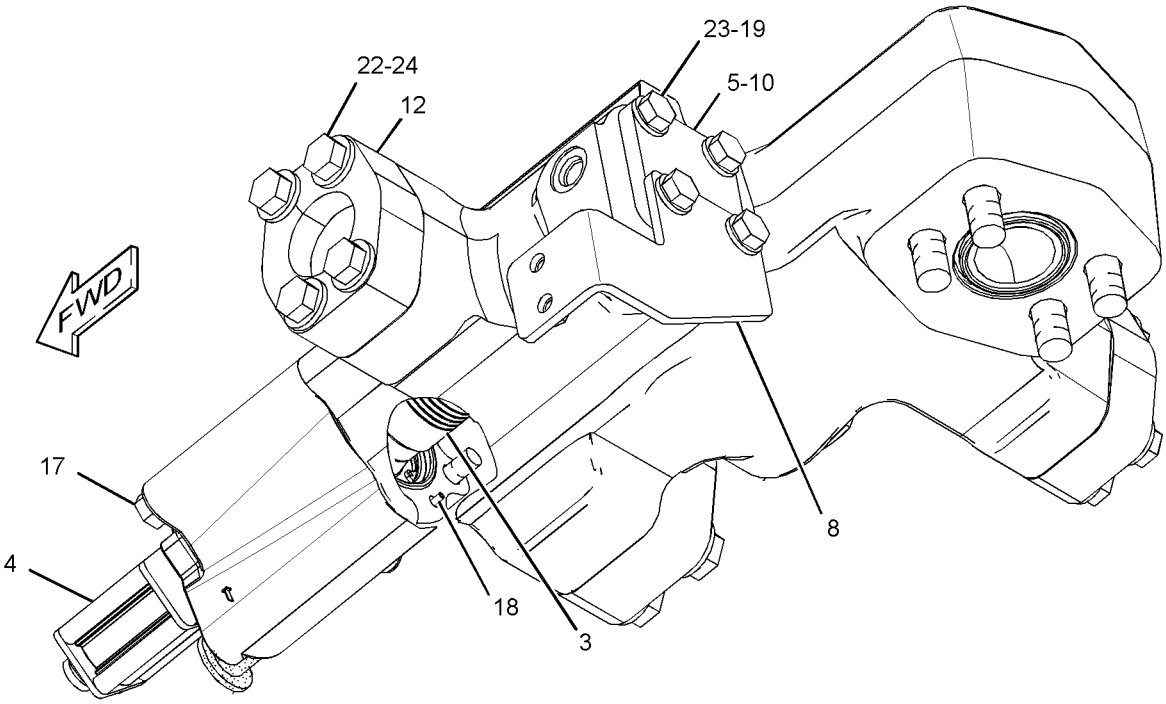

GRAPHIC #1 **<END>** g01942891

HYDRAULIC SYSTEM

191-8735 VALVE GP-DEMAND FAN

S/N: BXY1-UP

PART OF 225-6716 LINES GP-HYDRAULIC FAN

SMCS-5264, 5479 **i03782589**

NOTE	REF NO	GRAPHIC REF	PART NUMBER	QTY	PART NAME 1 2 3 4 5 6 (PRODUCT LEVEL)	SEE PAGE
	1	1	**3E-3584**	1	MANIFOLD	
Y	2	1	**183-7595**	1	VALVE GP-SOLENOID (24-VOLT) (DEMAND FAN)	1661

Y-SEPARATE ILLUSTRATION

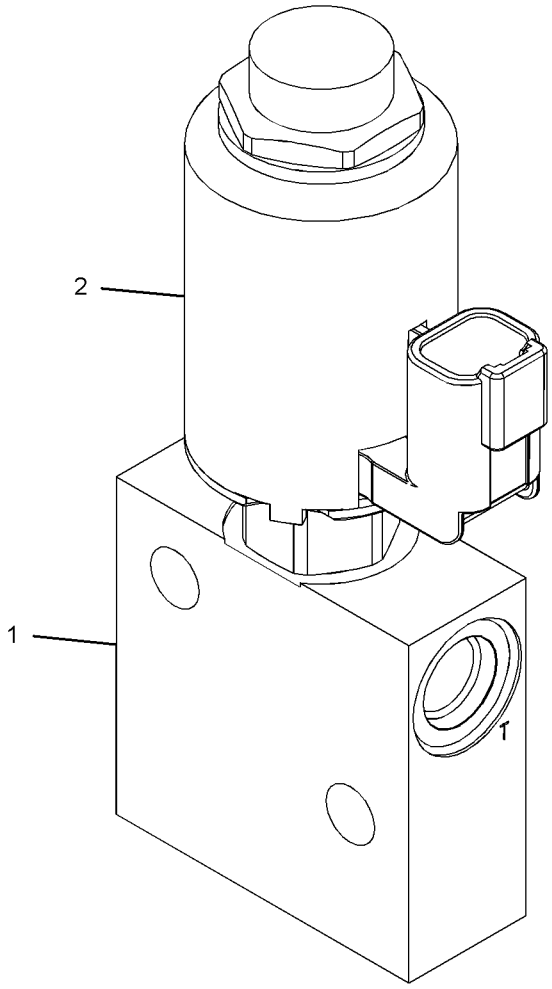

GRAPHIC #1 **<END>** g02054493

HYDRAULIC SYSTEM

212-8712 VALVE GP-MAIN CONTROL—2-FUNCTION

S/N: BXY1-UP

PART OF 132-6133 VALVE & MTG GP-MAIN CONTROL

AN ATTACHMENT

SMCS-5051 **i03254957**

NOTE	REF NO	GRAPHIC REF	PART NUMBER	QTY	PART NAME 1 2 3 4 5 6 (PRODUCT LEVEL)	SEE PAGE
	1	1	**4B-4158**	4	SCREW-DRIVE (4X0.25-IN)	
Y	2	1	**4T-1860**	1	VALVE GP-SHUTTLE (BALL RESOLVER)	1387
	3	2	**6E-1291**	1	VALVE	
	4	1	**7D-8508**	1	NUT-FULL (7/8-14-THD)	
	5	1	**7X-2459**	1	TEE-O-RING	
	6	1	**9G-4733**	1	TUBE	
	7	2	**9L-9188**	2	SPRING-VALVE	
	8	1	**9R-5008**	19	SPACER (11X20X6-MM THK)	
I	9	1	**9R-7996**	1	HOSE AS	
	10	1	**100-6731**	1	STEM	
	11	2	**102-4156**	2	VALVE	
	12	1	**112-8244**	1	HOUSING	
	13	2	**113-8263**	2	PISTON	
Y	14	1	**117-0159**	1	VALVE GP-RELIEF (MAIN)	1641
Y	15	2	**117-0160**	1	VALVE GP-RELIEF (LINE, TILT)	1642
	16	1	**117-9341**	1	BODY	
Y	17	2	**125-9349**	1	VALVE GP-RELIEF (LINE, LIFT)	1644
	20	1	**185-5626**	1	SPRING	
	21	1	**203-8482**	1	MANIFOLD	
Y	24	1	**217-6719**	2	ACTUATOR GP-PILOT CONTROL (PROPORTIONAL SOLENOID) (REGENERATION VALVE)	1399
Y	25	1	**217-6720**	2	ACTUATOR GP-PILOT CONTROL (PROPORTIONAL SOLENOID)	1403
C	26	1	*222-4737*	1	PLUG AS	
		1	**4J-7533**	1	SEAL-O-RING	
		1	**9S-4180**	1	PLUG	
M	27	1	**095-9804**	4	BOLT-SOCKET HEAD (M12X1.75X110-MM)	
	28	2	**102-4158**	2	PLUG AS	
					(EACH INCLUDES)	
		2	**3G-5003**	1	BEARING-SLEEVE	
Y	29	2	**117-0161**	1	VALVE GP-RELIEF (LINE, LIFT)	1643
Y	29A	2	**117-0161**	1	VALVE GP-RELIEF (LINE, TILT)	1643
C	30	2	*148-8406*	3	PLUG AS	
					(EACH INCLUDES)	
		2	**7M-8485**	1	SEAL-O-RING	
		2	**9S-9334**	1	PLUG-O-RING	
C	31	1,2	*148-8407*	6	PLUG AS	
					(EACH INCLUDES)	
		1,2	**3J-1907**	1	SEAL-O-RING	
		1,2	**9S-4191**	1	PLUG-O-RING	
C	32	1	*155-3624*	7	PLUG AS	
					(EACH INCLUDES)	
		1	**3J-7354**	1	SEAL-O-RING	
		1	**9S-4182**	1	PLUG-O-RING	
C	33	1,2	*162-0177*	5	PLUG AS	
					(EACH INCLUDES)	
		1,2	**3J-1907**	1	SEAL-O-RING	
		1,2	**9S-8004**	1	PLUG	
C	34	2	*183-7263*	4	PLUG AS	
					(EACH INCLUDES)	
		2	**3J-7354**	1	SEAL-O-RING	
		2	**9S-8002**	1	PLUG-O-RING	
	35	2	**1H-5728**	6	SEAL-O-RING	
	36	1	**1P-3705**	1	SEAL-RECTANGULAR	
	37	1	**2J-6274**	4	SEAL-O-RING	

212-8712 VALVE GP-MAIN CONTROL *(contd.)* i03254957

NOTE	REF NO	GRAPHIC REF	PART NUMBER	QTY	PART NAME 1 2 3 4 5 6 (PRODUCT LEVEL)	SEE PAGE
	38	1	**2M-9780**	1	SEAL-O-RING	
	39	2	**2S-4078**	2	SEAL-O-RING	
C	40	1	**3J-1907**	4	SEAL-O-RING	
C	41	1	**3J-7354**	2	SEAL-O-RING	
	42	1	**4J-0523**	1	SEAL-O-RING	
	43	1	**4J-0525**	1	SEAL-O-RING	
	44	1	**4J-5309**	1	SEAL-O-RING	
	45	1	**6E-2140**	1	RETAINER AS	
J	46	1	**6E-4286**	1	VALVE GP-PRESSURE REDUCING	
	47	1	**6V-0852**	2	CAP-DUST	
M	48	1	**6V-3668**	2	BOLT (M12X1.75X30-MM)	
	49	1	**6V-3965**	2	FITTING (QUICK DISCONNECT)	
	50	1	**6V-5759**	2	SEAL-O-RING	
	51	1	**6V-8397**	2	SEAL-O-RING	
	52	2	**7J-7852**	1	SPRING	
M	53	1	**7X-2546**	4	BOLT (M10X1.5X180-MM)	
M	54	1	**7X-2549**	2	BOLT (M12X1.75X100-MM)	
	55	1	**8L-6565**	4	PIN-SPRING	
	56	1	**8T-0075**	1	CONNECTOR	
	57	1	**8T-2353**	2	ADAPTER	
M	58	1	**8T-4139**	4	BOLT (M12X1.75X30-MM)	
	59	1	**8T-4205**	1	WASHER-HARD (7.2X14.5X2-MM THK)	
	60	1	**8T-4223**	4	WASHER-HARD (13.5X25.5X3-MM THK)	
M	61	1	**8T-5436**	4	BOLT (M10X1.5X130-MM)	
M	62	1	**8T-6466**	3	BOLT (M10X1.5X60-MM)	
	63	1	**8W-2966**	1	COVER	
					AVAILABLE REPAIR KIT(S):	
J			**6E-4287**	1	KIT-SEAL (PRESSURE REDUCING VALVE)	
					(INCLUDES RINGS & SEALS)	

C-CHANGE FROM PREVIOUS TYPE
I-REFER TO HYDRAULIC INFORMATION SYSTEM
J-KIT MARKED J SERVICES PART MARKED J
M-METRIC PART
Y-SEPARATE ILLUSTRATION

212-8712 VALVE GP-MAIN CONTROL *(contd.)* i03254957

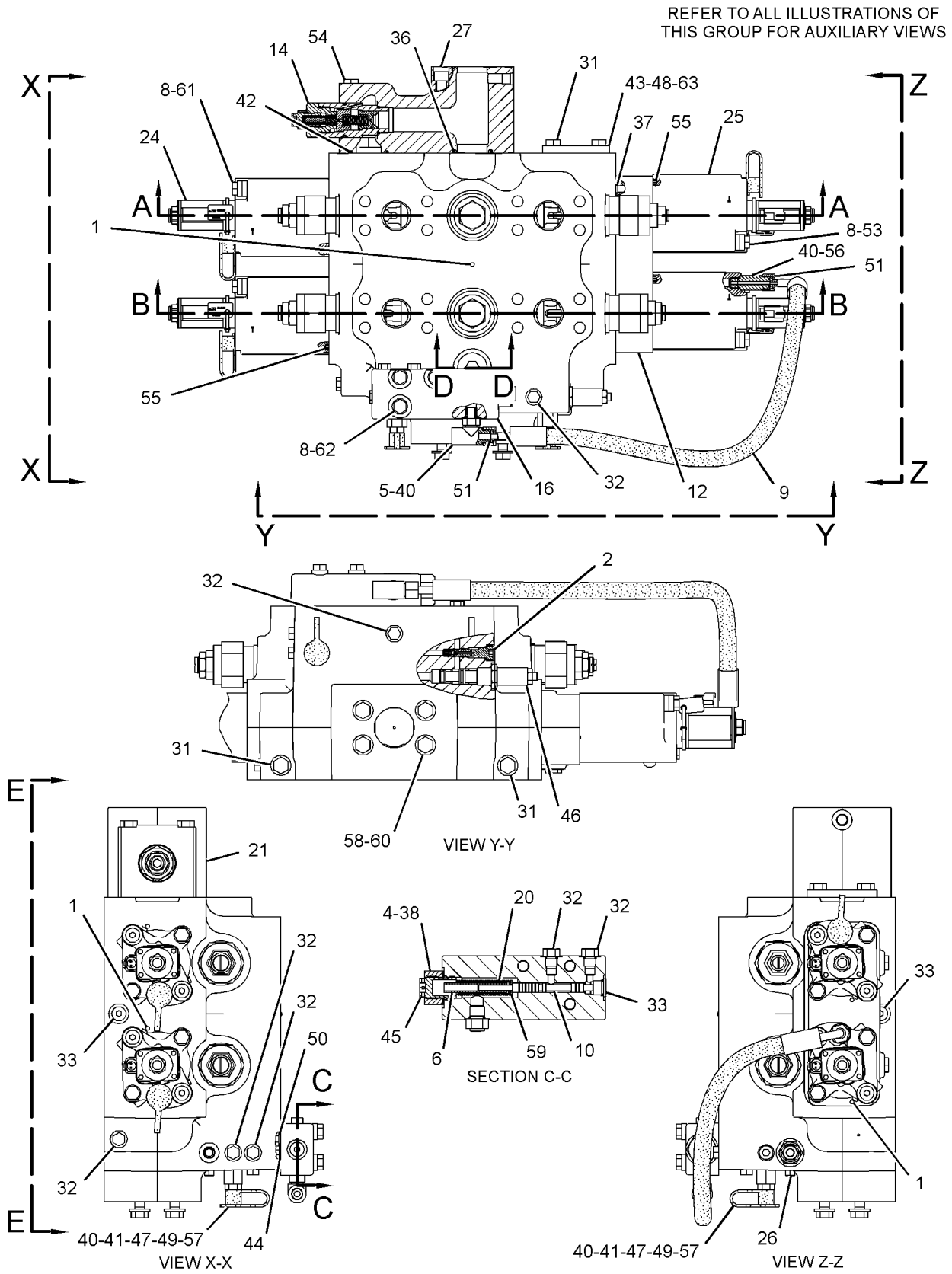

GRAPHIC #1 g01261988

212-8712 **VALVE GP-MAIN CONTROL** *(contd.)* **i03254957**

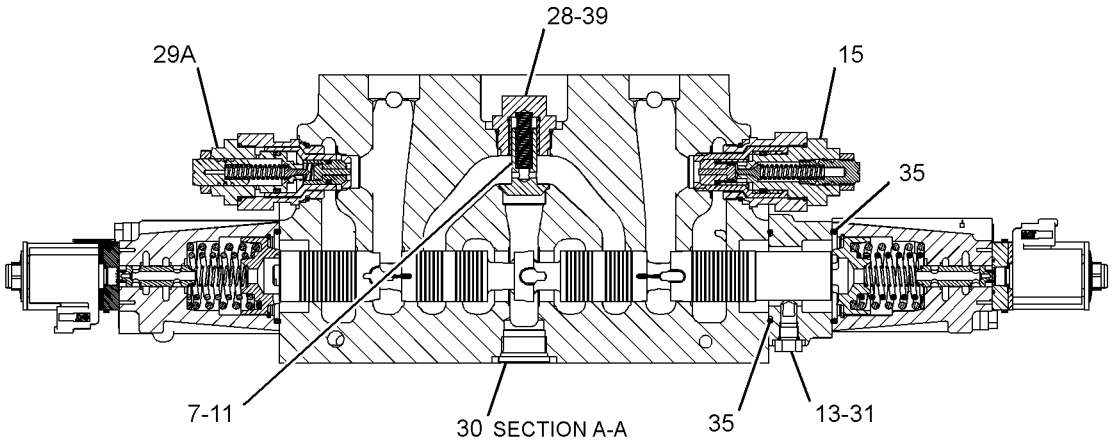

SECTION A-A

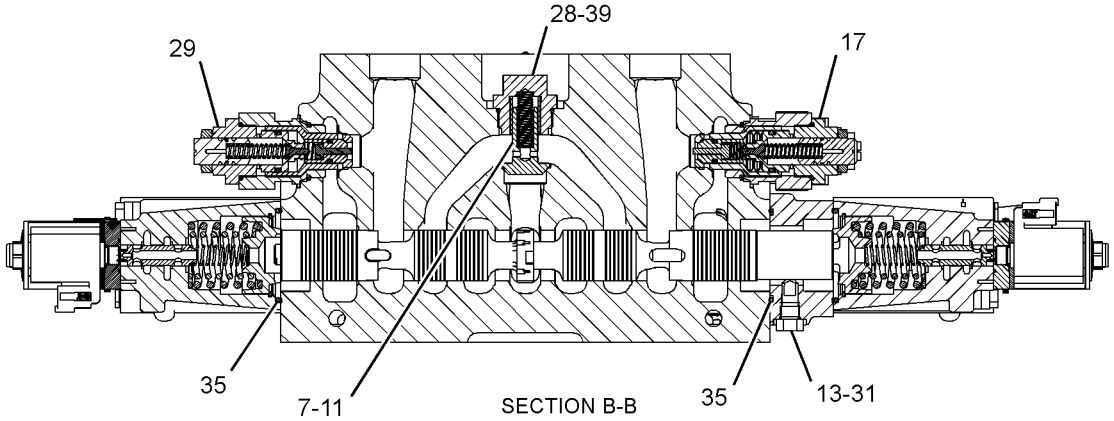

SECTION B-B

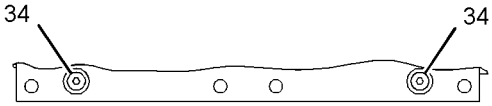

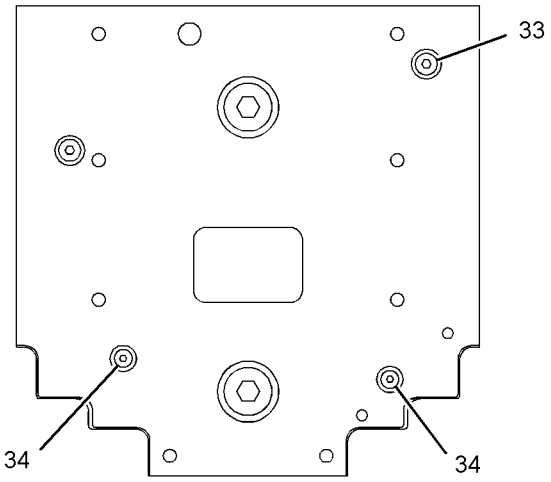

VIEW E-E

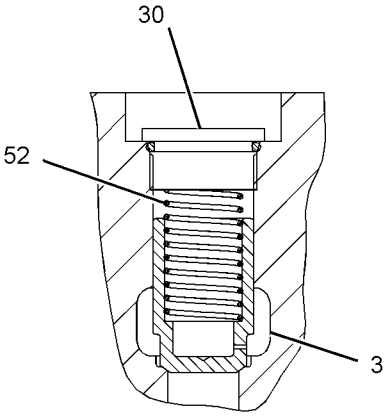

SECTION D-D

GRAPHIC #2 **<END>** g01261989

HYDRAULIC SYSTEM

212-8746 VALVE GP-MAIN CONTROL—3-FUNCTION

S/N: BXY1-UP

PART OF 201-0218 VALVE & MTG GP-MAIN CONTROL

AN ATTACHMENT

SMCS-5051 **i02742904**

NOTE	REF NO	GRAPHIC REF	PART NUMBER	QTY	PART NAME 1 2 3 4 5 6 (PRODUCT LEVEL)	SEE PAGE
	1	1	**4B-4158**	6	SCREW-DRIVE (4X0.25-IN)	
Y	2	3	**4T-1860**	1	VALVE GP-SHUTTLE (BALL RESOLVER)	1387
	3	3	**6E-1291**	1	VALVE	
	4	3	**7D-8508**	1	NUT-FULL (7/8-14-THD)	
	5	1	**7X-2459**	1	TEE-O-RING	
	6	3	**9G-4733**	1	TUBE	
	7	2	**9L-9188**	3	SPRING-VALVE	
	8	1	**9R-5008**	27	SPACER (11X20X6-MM THK)	
I	9	1	**9R-7996**	1	HOSE AS	
	10	3	**100-6731**	1	STEM	
	11	2	**102-4156**	3	VALVE	
	12	1	**112-8244**	1	HOUSING	
	13	2	**113-8263**	3	PISTON	
Y	14	1	**117-0159**	1	VALVE GP-RELIEF (MAIN)	1641
Y	15	2	**117-0160**	1	VALVE GP-RELIEF (LINE, TILT CYL HEAD END PORT)	1642
	16	1	**117-9341**	1	BODY	
Y	17	2	**125-9349**	1	VALVE GP-RELIEF (LINE, LIFT CYL HEAD END PORT)	1644
	21	1	**155-2291**	1	HOUSING	
Y	22	2	**172-5481**	1	VALVE GP-RELIEF (LINE, AUX CYL ROD END PORT)	1648
Y	22A	2	**172-5481**	1	VALVE GP-RELIEF (LINE, AUX CYL HEAD END PORT)	1648
	24	3	**185-5626**	1	SPRING	
	25	1	**203-8482**	1	MANIFOLD	
Y	28	1	**217-6719**	3	ACTUATOR GP-PILOT CONTROL (PROPORTIONAL SOLENOID) (REGENERATION VALVE)	1399
Y	29	1	**217-6720**	3	ACTUATOR GP-PILOT CONTROL (PROPORTIONAL SOLENOID)	1403
C	30	1	*222-4737*	1	PLUG AS	
		1	**4J-7533**		SEAL-O-RING	
		1	**9S-4180**	1	PLUG	
M	31	3	**095-9804**	4	BOLT-SOCKET HEAD (M12X1.75X110-MM)	
	32	2	**102-4158**	3	PLUG AS	
					(EACH INCLUDES)	
		2	**3G-5003**	1	BEARING-SLEEVE	
		2	**102-4157**	1	PLUG	
Y	33	2	**117-0161**	1	VALVE GP-RELIEF (LINE, LIFT CYL ROD END PORT)	1643
Y	33A	2	**117-0161**	1	VALVE GP-RELIEF (LINE, TILT CYL ROD END PORT)	1643
C	34	2,3	*148-8406*	3	PLUG AS	
					(EACH INCLUDES)	
		2,3	**7M-8485**	1	SEAL-O-RING	
		2,3	**9S-9334**	1	PLUG-O-RING	
C	35	2,3,1	*148-8407*	5	PLUG AS	
					(EACH INCLUDES)	
		2,3,1	**3J-1907**	1	SEAL-O-RING	
		2,3,1	**9S-4191**	1	PLUG-O-RING	
C	36	3,1	*155-3624*	7	PLUG AS	
					(EACH INCLUDES)	
		3,1	**3J-7354**		SEAL-O-RING	
		3,1	**9S-4182**		PLUG-O-RING	
C	37	3,1	*162-0177*	5	PLUG AS	
					(EACH INCLUDES)	
		3,1	**3J-1907**	1	SEAL-O-RING	
		3,1	**9S-8004**	1	PLUG	
M	38	1	**165-5085**	6	BOLT-SOCKET HEAD (M12X1.75X160-MM)	

212-8746 VALVE GP-MAIN CONTROL *(contd.)* i02742904

NOTE	REF NO	GRAPHIC REF	PART NUMBER	QTY	PART NAME 1 2 3 4 5 6 (PRODUCT LEVEL)	SEE PAGE
C	39	3	*183-7263*	4	PLUG AS	
					(EACH INCLUDES)	
		3	**3J-7354**	1	SEAL-O-RING	
		3	**9S-8002**	1	PLUG-O-RING	
	40	2	**1H-5728**	3	SEAL-O-RING	
	41	3	**1P-3704**	1	SEAL-RECTANGULAR	
	42	3	**1P-3705**	1	SEAL-RECTANGULAR	
	43	1	**2J-6274**	6	SEAL-O-RING	
	44	3	**2M-9780**	1	SEAL-O-RING	
	45	2	**2S-4078**	3	SEAL-O-RING	
	46	3	**3H-3385**	2	SEAL-O-RING	
	47	1	**3J-1907**	9	SEAL-O-RING	
C	48	1	**3J-7354**	2	SEAL-O-RING	
	49	3,1	**4J-0523**	4	SEAL-O-RING	
	50	1	**4J-5309**	1	SEAL-O-RING	
	51	2,3	**5P-8077**	6	FLANGE-HALF	
	52	3	**6E-2140**	1	RETAINER AS	
J	53	3	**6E-4286**	1	VALVE GP-PRESSURE REDUCING	
	54	1	**6V-0484**	2	ADAPTER-O-RING	
	55	1	**6V-0852**	5	CAP-DUST	
	56	1	**6V-3965**	5	FITTING (QUICK DISCONNECT)	
	57	1	**6V-5759**	2	SEAL-O-RING	
	58	1	**6V-8397**	2	SEAL-O-RING	
	59	1	**7J-1592**	1	COVER	
	60	3	**7J-7852**	1	SPRING	
M	61	1	**7X-2546**	6	BOLT (M10X1.5X180-MM)	
M	62	1	**7X-2549**	2	BOLT (M12X1.75X100-MM)	
	63	1	**8L-6565**	6	PIN-SPRING	
	64	1	**8T-0075**	1	CONNECTOR	
	65	1	**8T-2353**	2	ADAPTER	
	66	2,3	**8T-4122**	12	WASHER-HARD (17X32X3.5-MM THK)	
M	67	2,3,1	**8T-4140**	12	BOLT (M16X2X60-MM)	
M	68	1	**8T-4192**	2	BOLT (M12X1.75X25-MM)	
	69	3	**8T-4205**	1	WASHER-HARD (7.2X14.5X2-MM THK)	
M	70	1	**8T-5436**	6	BOLT (M10X1.5X130-MM)	
M	71	1	**8T-6466**	3	BOLT (M10X1.5X60-MM)	
					AVAILABLE REPAIR KIT(S):	
J			**6E-4287**	1	KIT-SEAL (PRESSURE REDUCING VALVE)	

C-CHANGE FROM PREVIOUS TYPE
I-REFER TO HYDRAULIC INFORMATION SYSTEM
J-KIT MARKED J SERVICES PART MARKED J
M-METRIC PART
Y-SEPARATE ILLUSTRATION

212-8746 VALVE GP-MAIN CONTROL *(contd.)* i02742904

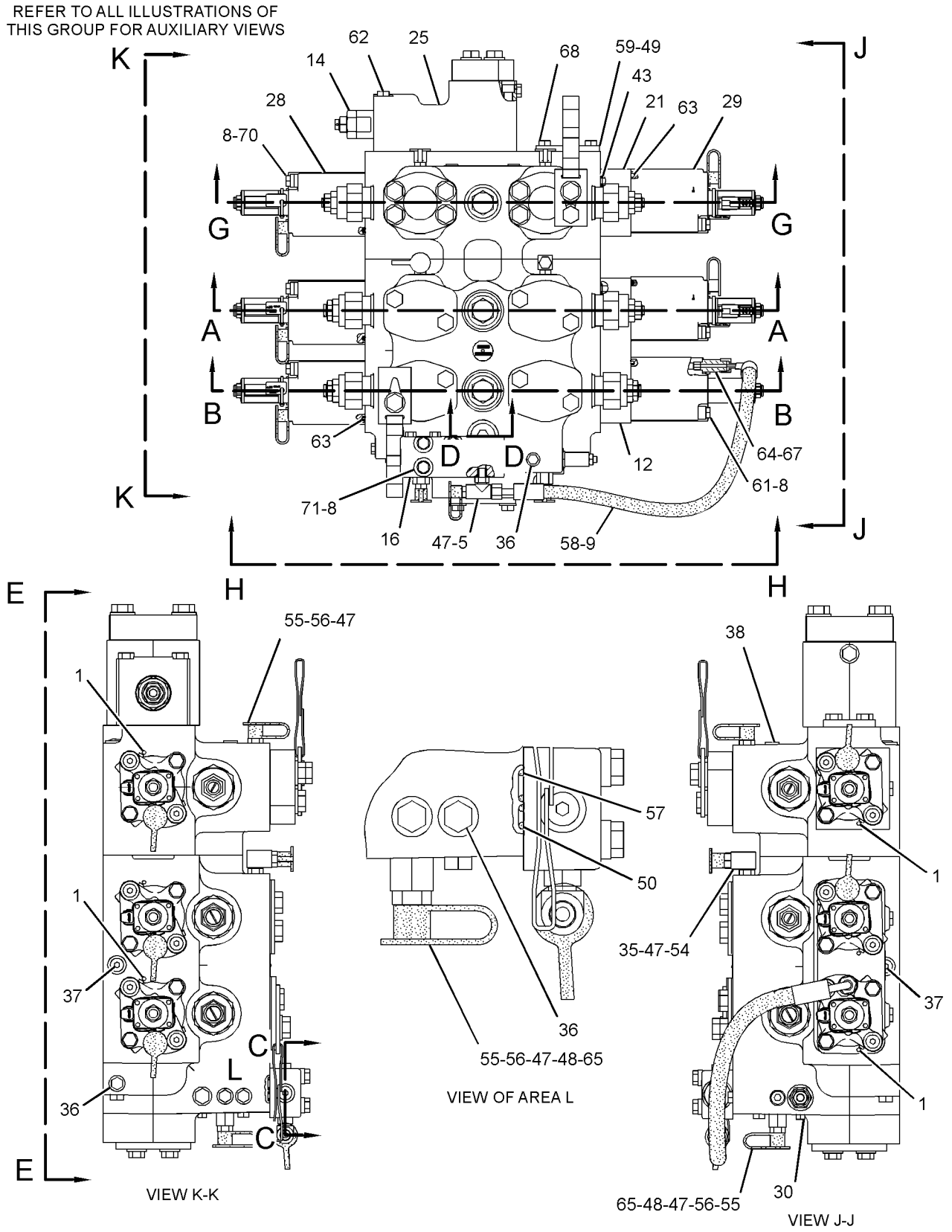

GRAPHIC #1 g01274256

212-8746 VALVE GP-MAIN CONTROL *(contd.)* i02742904

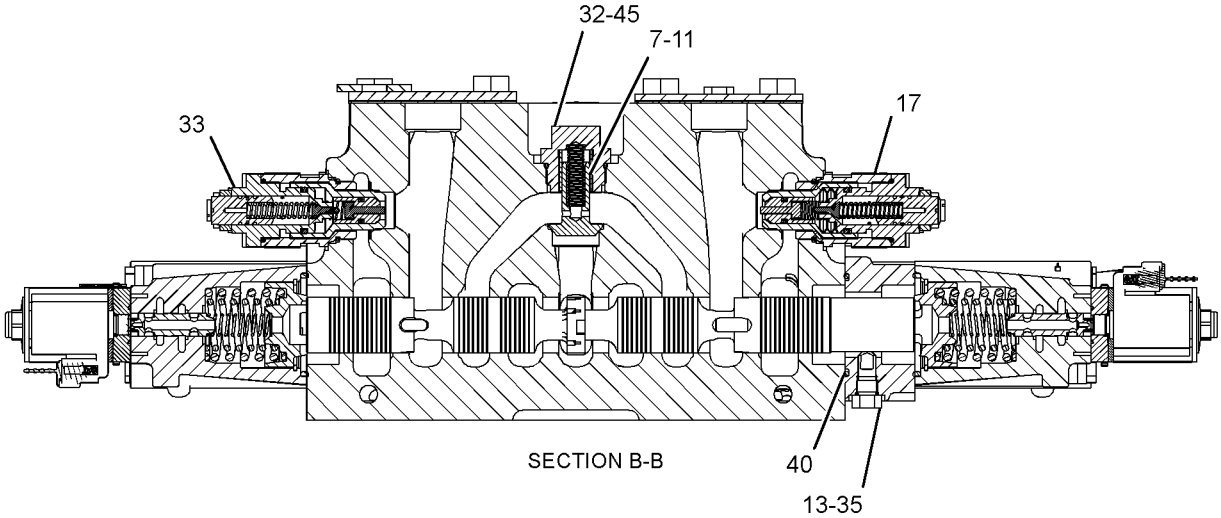

SECTION B-B

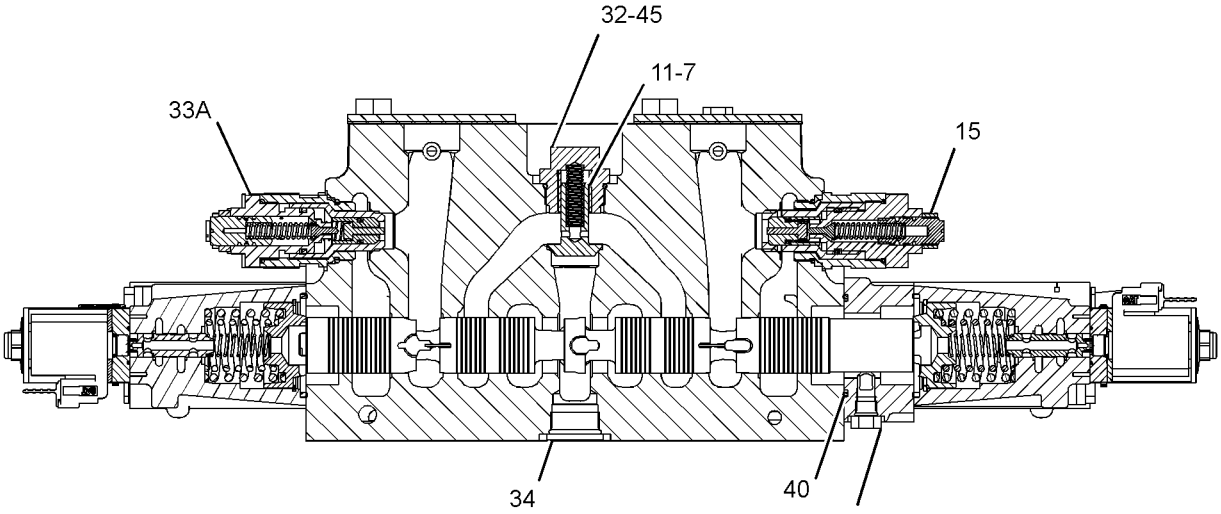

SECTION A-A

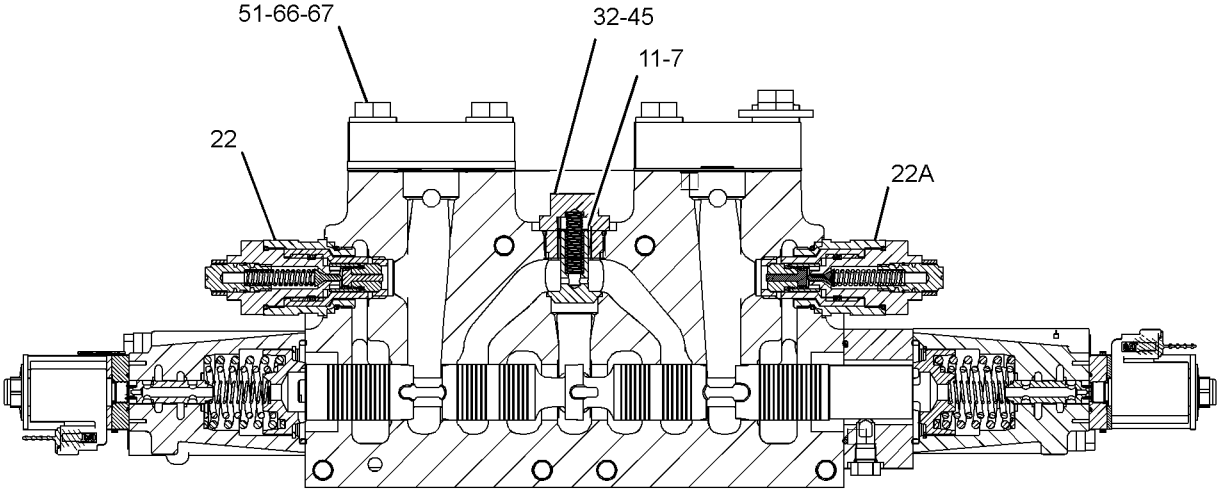

SECTION G-G

GRAPHIC #2 g01256061

212-8746 VALVE GP-MAIN CONTROL *(contd.)* i02742904

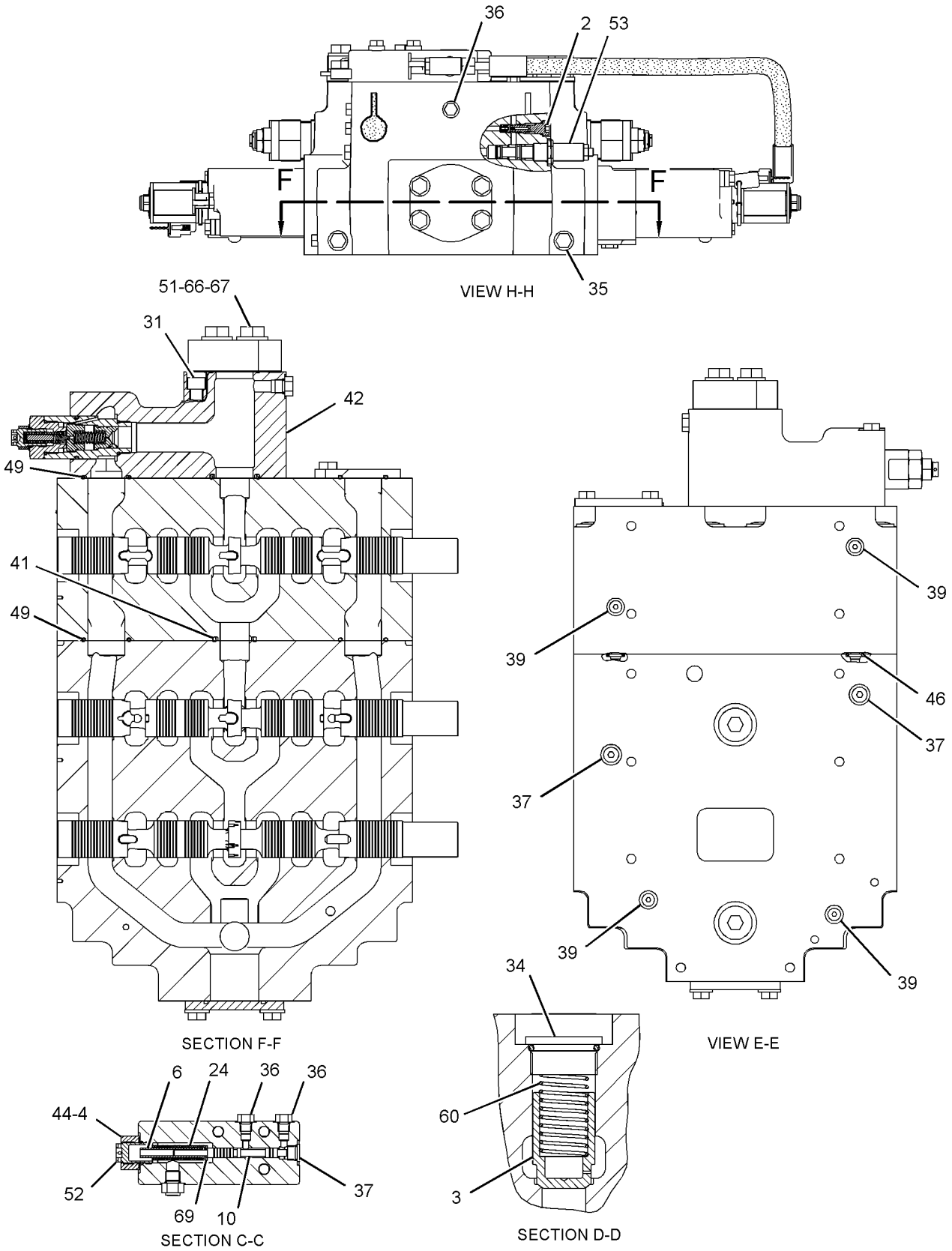

GRAPHIC #3 **<END>** g01256062

HYDRAULIC SYSTEM

292-8121 VALVE GP-MAIN CONTROL—LIFT, TILT

S/N: BXY2733-3999

PART OF 298-2500 VALVE & MTG GP-MAIN CONTROL

AN ATTACHMENT

SMCS-5051 **i03359700**

NOTE	REF NO	GRAPHIC REF	PART NUMBER	QTY	PART NAME 1 2 3 4 5 6 (PRODUCT LEVEL)	SEE PAGE
	1	1	**8W-2966**	1	COVER	
Y	2	3	**4T-1860**	1	VALVE GP-SHUTTLE (BALL RESOLVER)	1387
	3	2	**6E-1291**	1	VALVE	
	4	2	**6E-2140**	1	RETAINER AS	
J	5	3	**6E-4286**	1	VALVE GP-PRESSURE REDUCING (LOWERING CONTROL)	
	6	2	**6V-0852**	2	CAP-DUST	
	7	2	**7D-8508**	1	NUT-FULL (7/8-14-THD)	
	8	1	**7X-2459**	1	TEE-O-RING	
	9	2	**9G-4733**	1	TUBE	
	10	1	**9L-9188**	2	SPRING-VALVE	
	11	1	**9R-5008**	19	SPACER (11X20X6-MM THK)	
I	12	1	**9R-7996**	1	HOSE AS	
	13	2	**100-6731**	1	STEM	
	14	1	**102-4156**	2	VALVE	
	15	1	**102-4158**	2	PLUG AS	
					(EACH INCLUDES)	
	15A	1	**3G-5003**	1	BEARING-SLEEVE	
		1	**102-4157**	1	PLUG	
	16	1	**112-8244**	1	HOUSING	
	17	1	**113-8263**	2	PISTON	
Y	18	1	**117-0159**	1	VALVE GP-RELIEF (MAIN)	1641
Y	19	1	**117-0160**	1	VALVE GP-RELIEF (LINE, TILT)	1642
	20	1	**117-9341**	1	BODY	
Y	21	1	**125-9349**	1	VALVE GP-RELIEF (LINE, LIFT)	1644
	24	2	**185-5626**	1	SPRING	
	25	2	**203-8482**	1	MANIFOLD	
Y	26	1	**217-6719**	2	ACTUATOR GP-PILOT CONTROL (PROPORTIONAL SOLENOID) (REGENERATION VALVE)	1399
Y	27	1	**217-6720**	2	ACTUATOR GP-PILOT CONTROL (PROPORTIONAL SOLENOID) (HOIST CONTROL VALVE)	1403
	28	2	*222-4737*	1	PLUG AS	
		2	**4J-7533**	1	SEAL-O-RING	
		2	**9S-4180**	1	PLUG	
M	31	1	**095-9804**	4	BOLT-SOCKET HEAD (M12X1.75X110-MM)	
Y	32	1	**117-0161**	1	VALVE GP-RELIEF (LINE, LIFT)	1643
Y	32A	1	**117-0161**	1	VALVE GP-RELIEF (LINE, TILT)	1643
	33	2	*148-8406*	3	PLUG AS	
					(EACH INCLUDES)	
		2	**7M-8485**	1	SEAL-O-RING	
		2	**9S-9334**	1	PLUG-O-RING	
	34	1,3	*148-8407*	6	PLUG AS	
					(EACH INCLUDES)	
		1,3	**3J-1907**	1	SEAL-O-RING	
		1,3	**9S-4191**	1	PLUG-O-RING	
	35	1,2,3	*155-3624*	7	PLUG AS	
					(EACH INCLUDES)	
		1,2,3	**3J-7354**	1	SEAL-O-RING	
		1,2,3	**9S-4182**	1	PLUG-O-RING	
	36	2,3	*162-0177*	5	PLUG AS	
					(EACH INCLUDES)	
		2,3	**3J-1907**	1	SEAL-O-RING	
		2,3	**9S-8004**	1	PLUG	
	37	3	*183-7263*	4	PLUG AS	
					(EACH INCLUDES)	
		3	**3J-7354**	1	SEAL-O-RING	

292-8121 VALVE GP-MAIN CONTROL *(contd.)* i03359700

NOTE	REF NO	GRAPHIC REF	PART NUMBER	QTY	PART NAME 1 2 3 4 5 6 (PRODUCT LEVEL)	SEE PAGE
		3	**9S-8002**	1	PLUG-O-RING	
	38	1	**1H-5728**	6	SEAL-O-RING	
	39	1	**1P-3705**	1	SEAL-RECTANGULAR	
	40	1	**2J-6274**	4	SEAL-O-RING	
	41	2	**2M-9780**	1	SEAL-O-RING	
	42	1	**2S-4078**	2	SEAL-O-RING	
	43	1,2	**3J-1907**	4	SEAL-O-RING	
	44	2	**3J-7354**	2	SEAL-O-RING	
	45	1	**4J-0523**	1	SEAL-O-RING	
	46	1	**4J-0525**	1	SEAL-O-RING	
	47	2	**4J-5309**	1	SEAL-O-RING	
M	48	1	**6V-3668**	2	BOLT (M12X1.75X30-MM)	
	49	2	**6V-3965**	2	FITTING (QUICK DISCONNECT)	
	50	2	**6V-5759**	2	SEAL-O-RING	
	51	1	**6V-8397**	2	SEAL-O-RING	
	52	2	**7J-7852**	1	SPRING	
M	53	1	**7X-2546**	4	BOLT (M10X1.5X180-MM)	
M	54	1	**7X-2549**	2	BOLT (M12X1.75X100-MM)	
	55	1	**8L-6565**	4	PIN-SPRING	
	56	1	**8T-0075**	1	CONNECTOR	
	57	2	**8T-2353**	2	ADAPTER	
M	58	3	**8T-4139**	4	BOLT (M12X1.75X30-MM)	
	59	2	**8T-4205**	1	WASHER-HARD (7.2X14.5X2-MM THK)	
	60	3	**8T-4223**	4	WASHER-HARD (13.5X25.5X3-MM THK)	
M	61	1	**8T-5436**	4	BOLT (M10X1.5X130-MM)	
M	62	1	**8T-6466**	3	BOLT (M10X1.5X60-MM)	
					AVAILABLE REPAIR KIT(S):	
J			**6E-4287**	1	KIT-SEAL (PRESSURE REDUCING VALVE)	
					(INCLUDES SEALS & RINGS)	

I-REFER TO HYDRAULIC INFORMATION SYSTEM
J-KIT MARKED J SERVICES PARTS MARKED J
M-METRIC PART
Y-SEPARATE ILLUSTRATION

292-8121 VALVE GP-MAIN CONTROL *(contd.)* i03359700

REFER TO ALL ILLUSTRATIONS OF
THIS GROUP FOR AUXILIARY VIEWS

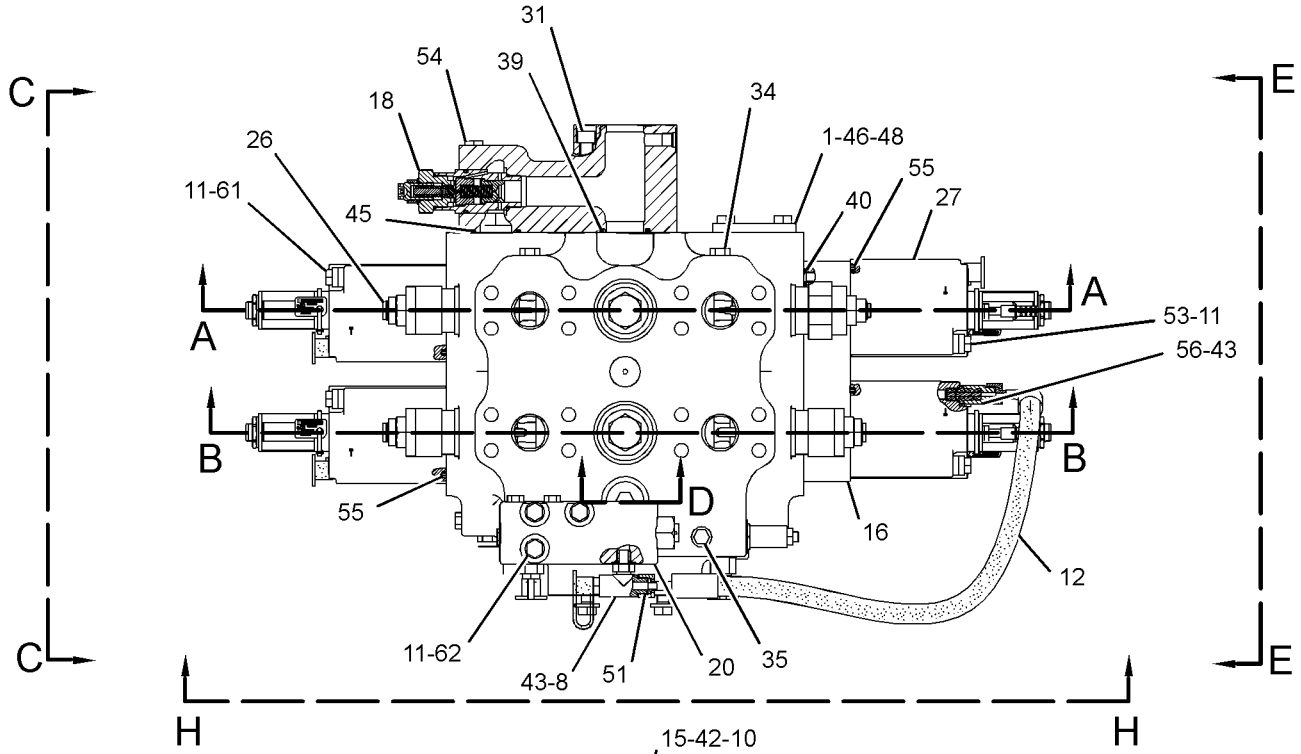

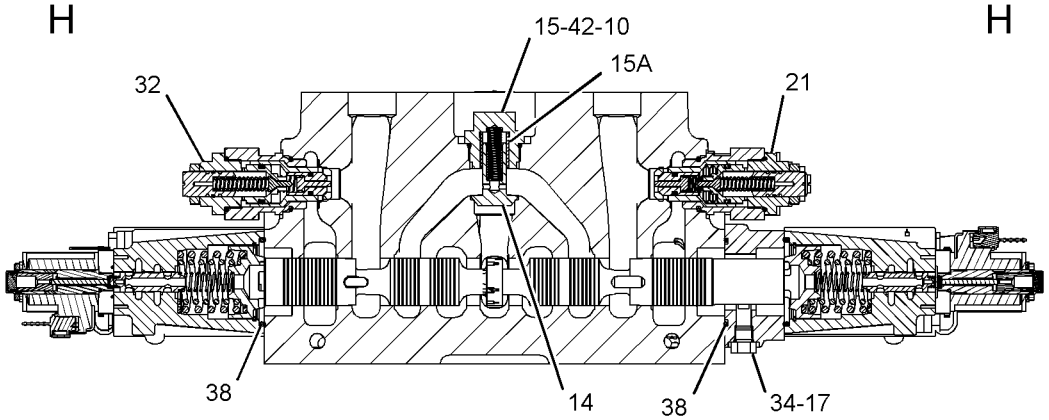

SECTION B-B

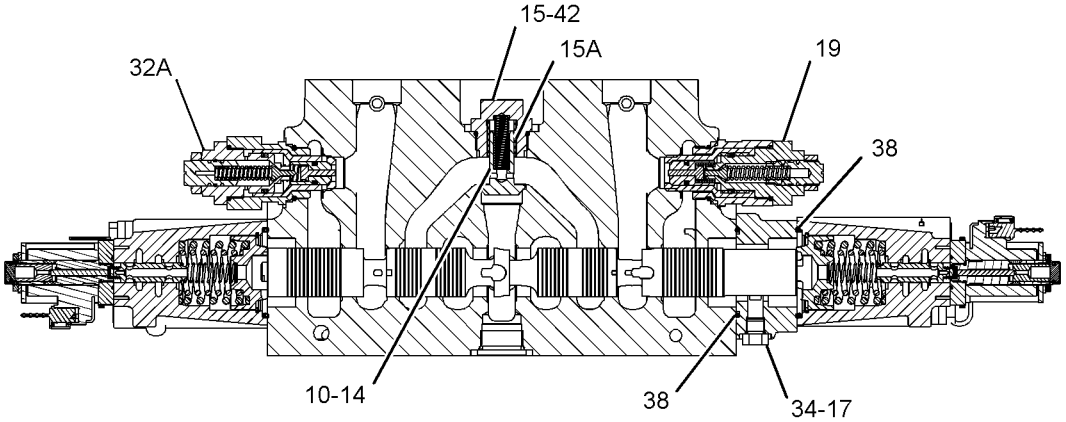

SECTION A-A

GRAPHIC #1 g02040874

292-8121 VALVE GP-MAIN CONTROL *(contd.)* i03359700

REFER TO ALL ILLUSTRATIONS OF
THIS GROUP FOR AUXILIARY VIEWS

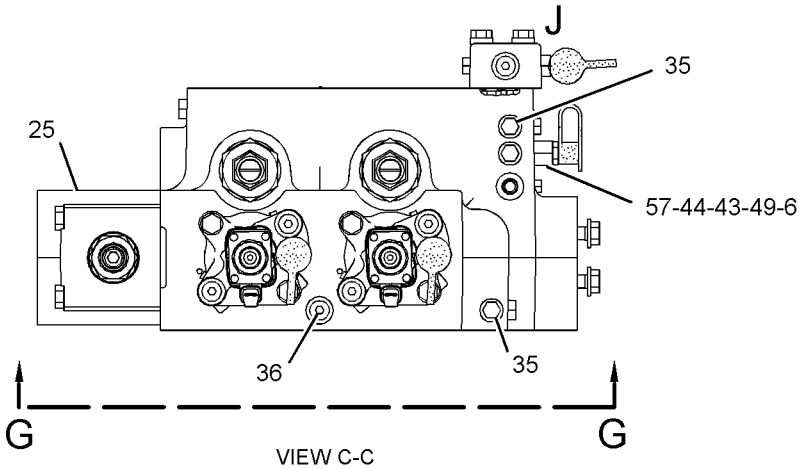

VIEW C-C

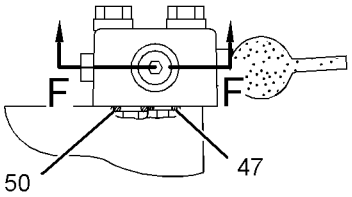

VIEW OF AREA J

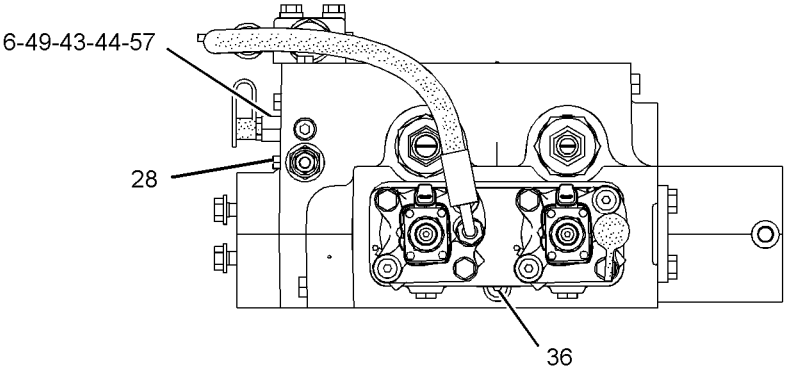

VIEW E-E

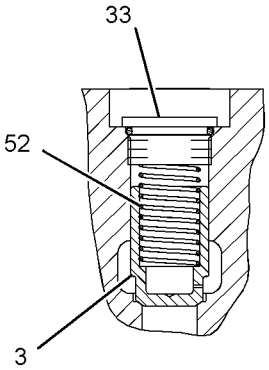

SECTION D

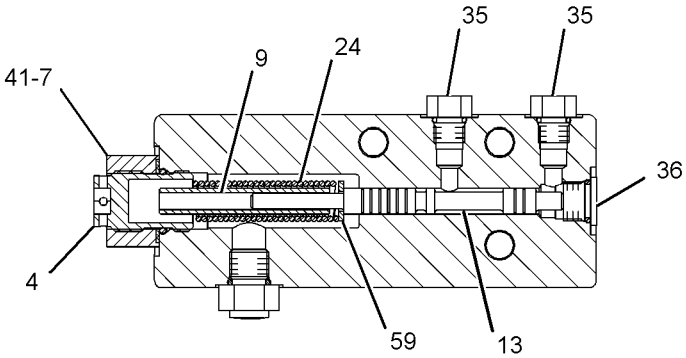

SECTION F-F

GRAPHIC #2 g01958433

292-8121 VALVE GP-MAIN CONTROL *(contd.)* i03359700

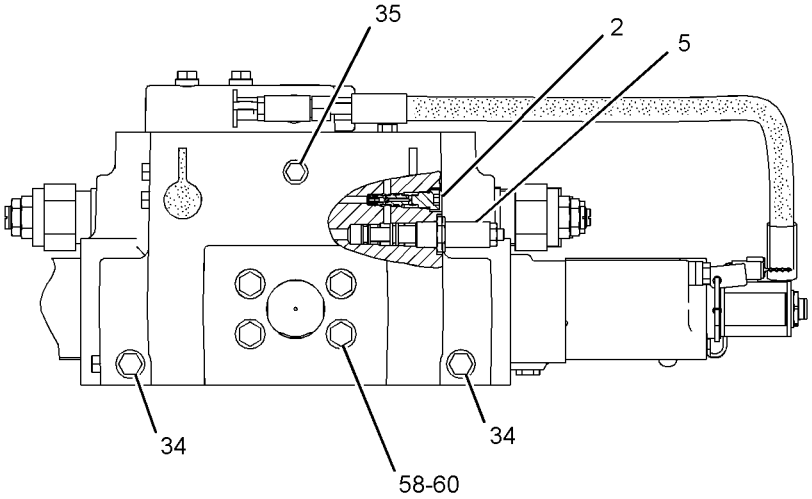

VIEW H-H

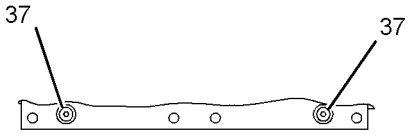

VIEW K-K

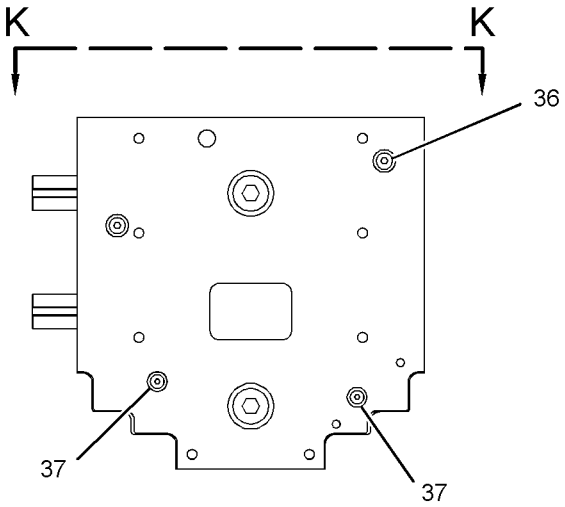

VIEW G-G

GRAPHIC #3 **<END>** g01958434

HYDRAULIC SYSTEM

292-8123 VALVE GP-MAIN CONTROL

S/N: BXY2733-3999

PART OF 298-2501 VALVE & MTG GP-MAIN CONTROL

AN ATTACHMENT

SMCS-5051 **i03360011**

NOTE	REF NO	GRAPHIC REF	PART NUMBER	QTY	PART NAME 1 2 3 4 5 6 (PRODUCT LEVEL)	SEE PAGE
	1	1	**4B-4158**	6	SCREW-DRIVE (4X0.25-IN)	
Y	2	3	**4T-1860**	1	VALVE GP-SHUTTLE	1387
	3	3	**6E-1291**	1	VALVE	
	4	3	**6E-2140**	1	RETAINER AS	
	5	3	**6E-4286**	1	VALVE GP-PRESSURE REDUCING	
	6	1	**6V-0852**	5	CAP-DUST	
	7	3	**7D-8508**	1	NUT-FULL (7/8-14-THD)	
	8	1	**7X-2459**	1	TEE-O-RING	
	9	3	**9G-4733**	1	TUBE	
	10	2	**9L-9188**	3	SPRING-VALVE	
	11	1	**9R-5008**	27	SPACER (11X20X6-MM THK)	
I	12	1	**9R-7996**	1	HOSE AS	
	13	3	**100-6731**	1	STEM	
	14	2	**102-4156**	3	VALVE	
	15	2	**102-4158**	3	PLUG AS	
					(EACH INCLUDES)	
		2	**3G-5003**	1	BEARING-SLEEVE	
		2	**102-4157**	1	PLUG	
	16	1	**112-8244**	1	HOUSING	
	17	2	**113-8263**	3	PISTON	
Y	18	1	**117-0159**	1	VALVE GP-RELIEF (MAIN)	1641
Y	19	2	**117-0160**	1	VALVE GP-RELIEF (LINE, TILT)	1642
	20	1	**117-9341**	1	BODY	
Y	21	2	**125-9349**	1	VALVE GP-RELIEF (LINE, LIFT)	1644
	25	1	**155-2291**	1	HOUSING	
Y	26	2	**172-5481**	2	VALVE GP-RELIEF (LINE, AUXILIARY)	1648
	28	3	**185-5626**	1	SPRING	
	29	1	**203-8482**	1	MANIFOLD	
Y	30	1	**217-6719**	3	ACTUATOR GP-PILOT CONTROL (PROPORTIONAL SOLENOID)	1399
Y	31	1	**217-6720**	3	ACTUATOR GP-PILOT CONTROL (PROPORTIONAL SOLENOID)	1403
	32	1	*222-4737*	1	PLUG AS	
		1	**4J-7533**	1	SEAL-O-RING	
		1	**9S-4180**	1	PLUG	
M	35	3	**095-9804**	4	BOLT-SOCKET HEAD (M12X1.75X110-MM)	
Y	36	2	**117-0161**	2	VALVE GP-RELIEF (LINE, LIFT)	1643
	37	2,3	*148-8406*	3	PLUG AS	
					(EACH INCLUDES)	
		2,3	**7M-8485**	1	SEAL-O-RING	
		2,3	**9S-9334**	1	PLUG-O-RING	
	38	1,2,3	*148-8407*	5	PLUG AS	
					(EACH INCLUDES)	
		1,2,3	**3J-1907**	1	SEAL-O-RING	
		1,2,3	**9S-4191**	1	PLUG-O-RING	
	39	1,3	*155-3624*	7	PLUG AS	
					(EACH INCLUDES)	
		1,3	**3J-7354**	1	SEAL-O-RING	
		1,3	**9S-4182**	1	PLUG-O-RING	
	40	1,3	*162-0177*	5	PLUG AS	
					(EACH INCLUDES)	
		1,3	**3J-1907**	1	SEAL-O-RING	
		1,3	**9S-8004**	1	PLUG	
M	41	1	**165-5085**	6	BOLT-SOCKET HEAD (M12X1.75X160-MM)	

292-8123 VALVE GP-MAIN CONTROL *(contd.)* i03360011

NOTE	REF NO	GRAPHIC REF	PART NUMBER	QTY	PART NAME 1 2 3 4 5 6 (PRODUCT LEVEL)	SEE PAGE
	42	3	*183-7263*	4	PLUG AS	
					(EACH INCLUDES)	
		3	**3J-7354**	1	SEAL-O-RING	
		3	**9S-8002**	1	PLUG-O-RING	
	43	2	**1H-5728**	3	SEAL-O-RING	
	44	3	**1P-3704**	1	SEAL-RECTANGULAR	
	45	3	**1P-3705**	1	SEAL-RECTANGULAR	
	46	1	**2J-6274**	6	SEAL-O-RING	
	47	3	**2M-9780**	1	SEAL-O-RING	
	48	2	**2S-4078**	3	SEAL-O-RING	
	49	3	**3H-3385**	2	SEAL-O-RING	
	50	1	**3J-1907**	9	SEAL-O-RING	
	51	1	**3J-7354**	2	SEAL-O-RING	
	52	1,3	**4J-0523**	4	SEAL-O-RING	
	53	1	**4J-5309**	1	SEAL-O-RING	
	54	2,3	**5P-8077**	6	FLANGE-HALF	
	55	1	**6V-0484**	2	ADAPTER-O-RING	
	56	1	**6V-3965**	5	FITTING (QUICK DISCONNECT)	
	57	1	**6V-5759**	2	SEAL-O-RING	
	58	1	**6V-8397**	2	SEAL-O-RING	
	59	1	**7J-1592**	1	COVER	
	60	3	**7J-7852**	1	SPRING	
M	61	1	**7X-2546**	6	BOLT (M10X1.5X180-MM)	
M	62	1	**7X-2549**	2	BOLT (M12X1.75X100-MM)	
	63	1	**8L-6565**	6	PIN-SPRING	
	64	1	**8T-0075**	1	CONNECTOR	
	65	1	**8T-2353**	2	ADAPTER	
	66	2,3	**8T-4122**	12	WASHER-HARD (17X32X3.5-MM THK)	
M	67	2,3	**8T-4140**	12	BOLT (M16X2X60-MM)	
M	68	1	**8T-4192**	2	BOLT (M12X1.75X25-MM)	
	69	3	**8T-4205**	1	WASHER-HARD (7.2X14.5X2-MM THK)	
M	70	1	**8T-5436**	6	BOLT (M10X1.5X130-MM)	
M	71	1	**8T-6466**	3	BOLT (M10X1.5X60-MM)	

I-REFER TO HYDRAULIC INFORMATION SYSTEM
M-METRIC PART
Y-SEPARATE ILLUSTRATION

292-8123 VALVE GP-MAIN CONTROL *(contd.)* i03360011

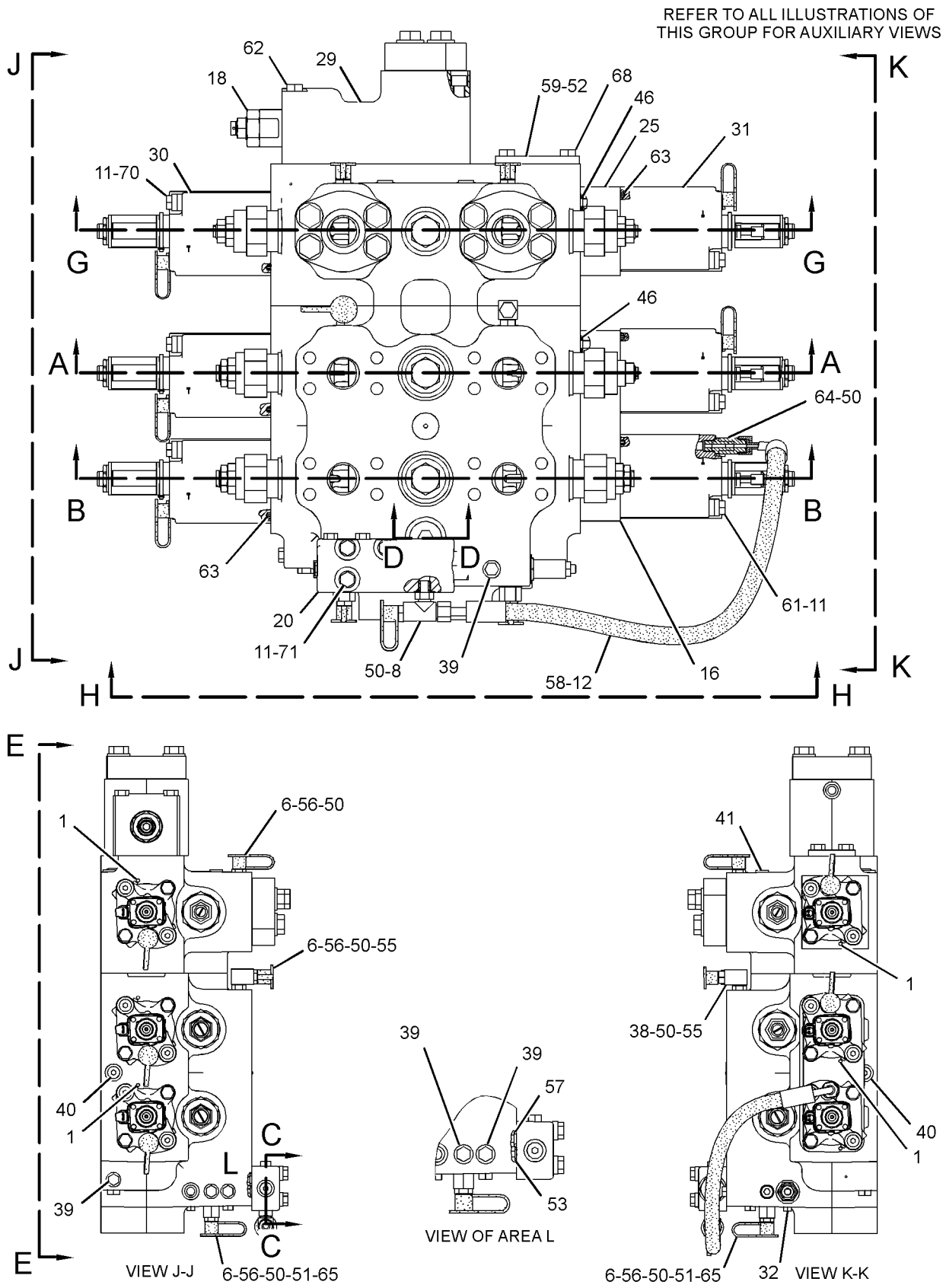

GRAPHIC #1 g01943378

292-8123 VALVE GP-MAIN CONTROL *(contd.)* i03360011

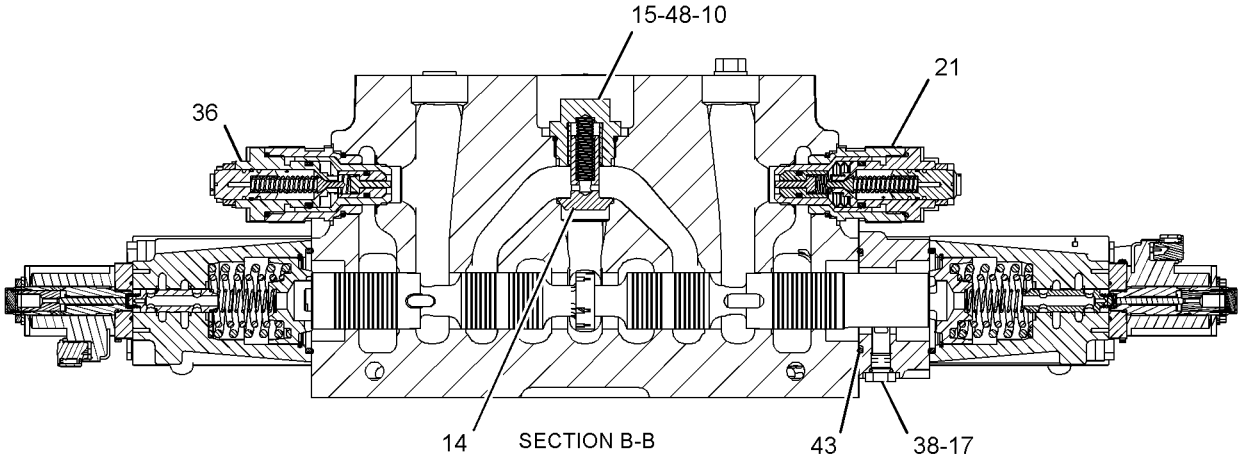

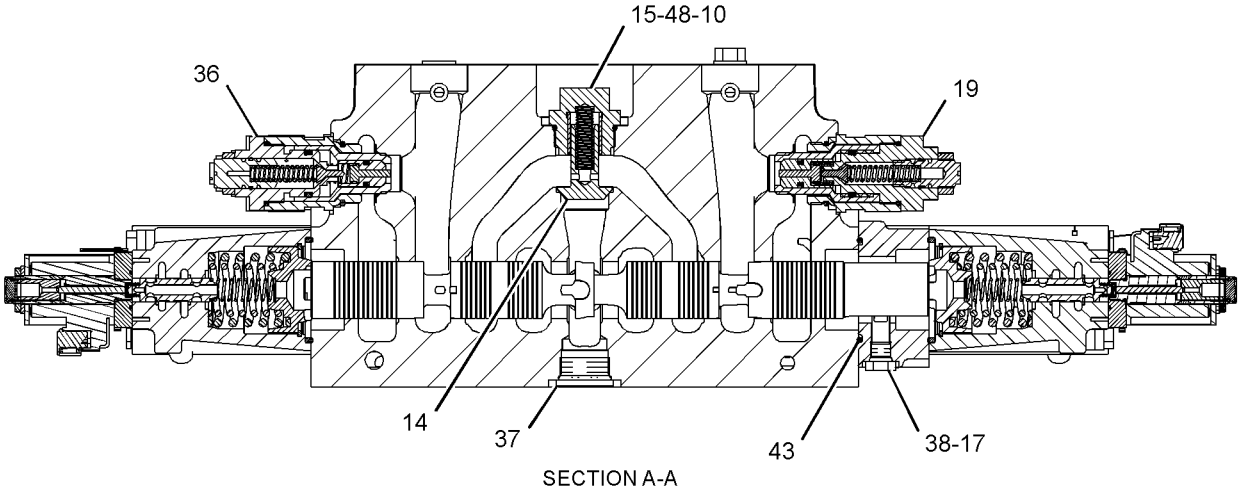

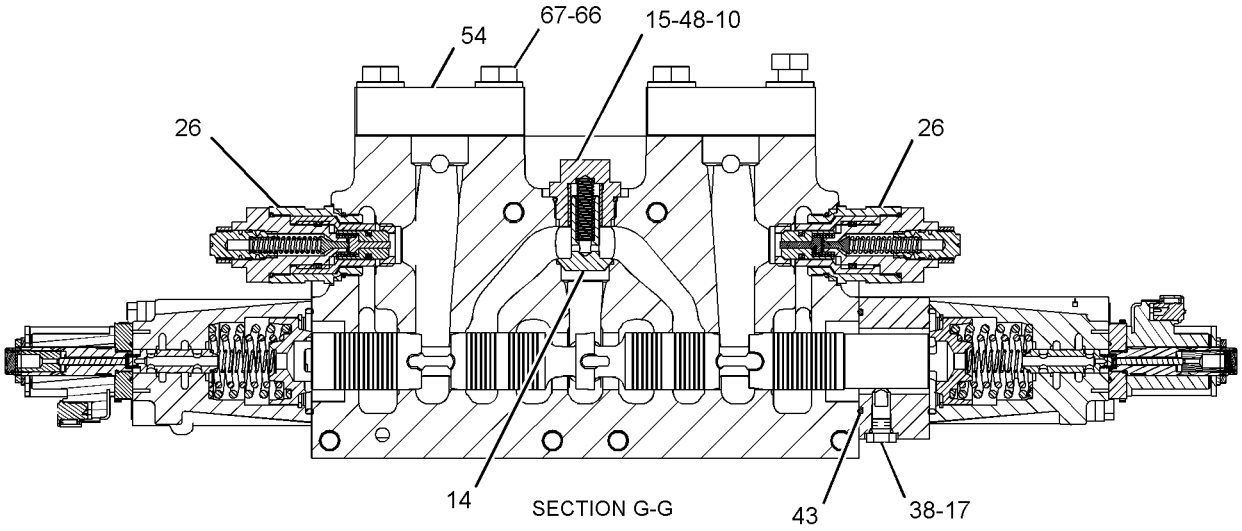

GRAPHIC #2 g01943379

292-8123 VALVE GP-MAIN CONTROL *(contd.)* i03360011

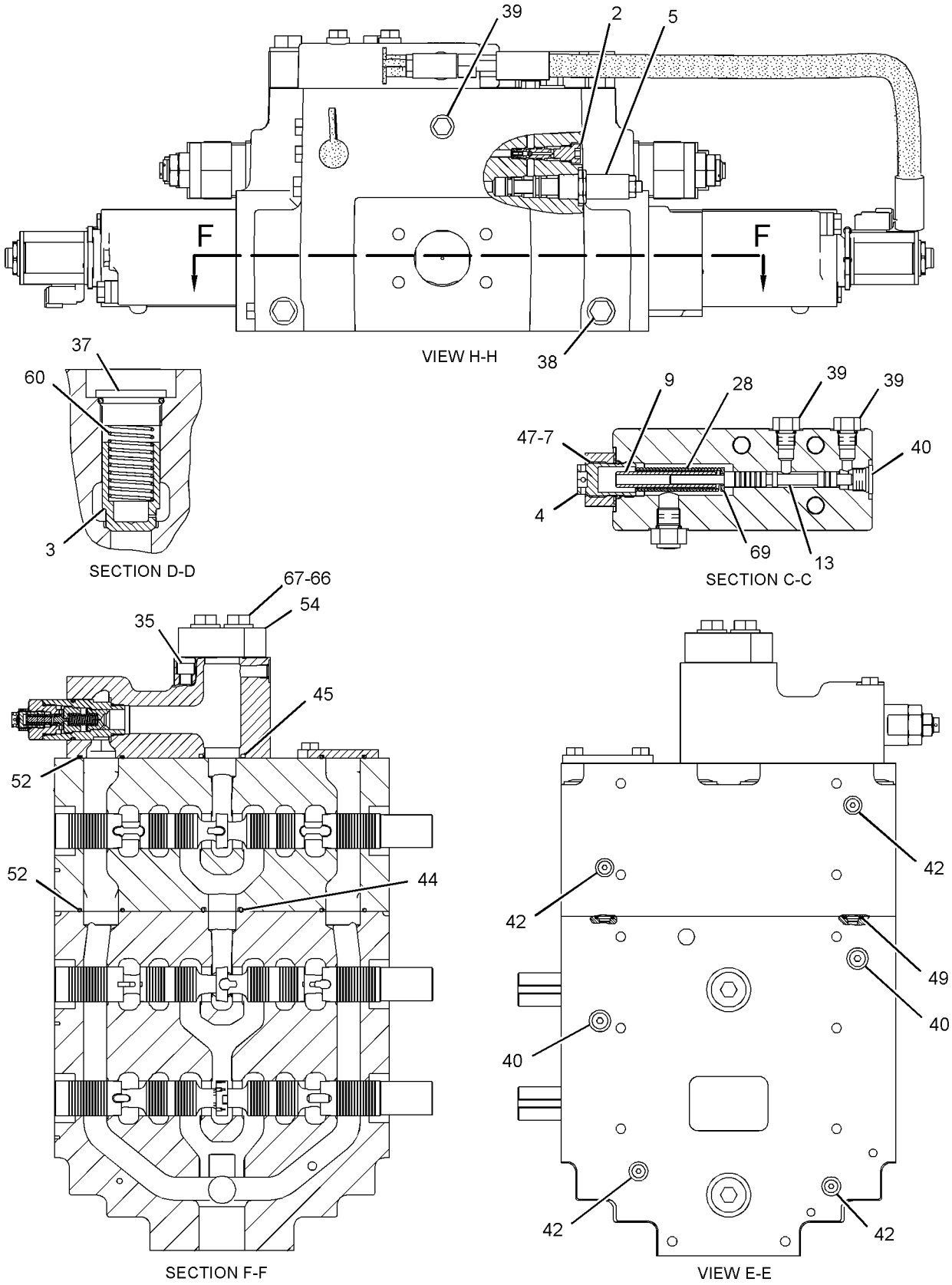

GRAPHIC #3 **<END>** g01943380

HYDRAULIC SYSTEM

112-1817 VALVE GP-MANUAL—LOWERING CONTROL

S/N: BXY1-UP

PART OF 190-0948 COUPLER GP-QUICK, 132-6133, 201-0218, 298-2500, 298-2501, 315-8815, 315-8830 VALVE & MTG GP-MAIN CONTROL

AN ATTACHMENT

SMCS-5001, 5130, 5147 **i02903081**

NOTE	PART NUMBER	QTY	PART NAME 1 2 3 4 5 6 (PRODUCT LEVEL)	SEE PAGE
J	*202-0671*	1	VALVE GP-MANUAL (COUPLER PIN, LIFT ARM LWR CONT)	
			—OR—	
J	*202-0673*	1	VALVE GP-MANUAL (COUPLER PIN, LIFT ARM LWR CONT)	
			—OR—	
J	*202-0674*	1	VALVE GP-MANUAL (COUPLER PIN, LIFT ARM LWR CONT)	
			AVAILABLE REPAIR KIT(S):	
J	**112-9861**	1	KIT-SEAL (DEAD ENGINE LOWERING)	
			(INCLUDES SEALS, CONNECTORS & THRUST RING)	

J-KIT MARKED J SERVICES PARTS MARKED J

<END>

HYDRAULIC SYSTEM

185-1897 VALVE GP-PRESSURE REDUCING

S/N: BXY4000-UP
PART OF 222-4436 VALVE GP-CONTROL
AN ATTACHMENT

SMCS-5117 **i02403114**

NOTE	REF NO	GRAPHIC REF	PART NUMBER	QTY	PART NAME 1 2 3 4 5 6 (PRODUCT LEVEL)	SEE PAGE
	1	1	**3K-0360**	1	SEAL-O-RING	
	2	1	**161-6149**	1	SEAL-O-RING	
	3	1	**095-1750**	1	SEAL-O-RING	
	4	1	**161-6161**	2	RING-BACKUP	
	5	1	**187-0541**	2	RING-BACKUP	

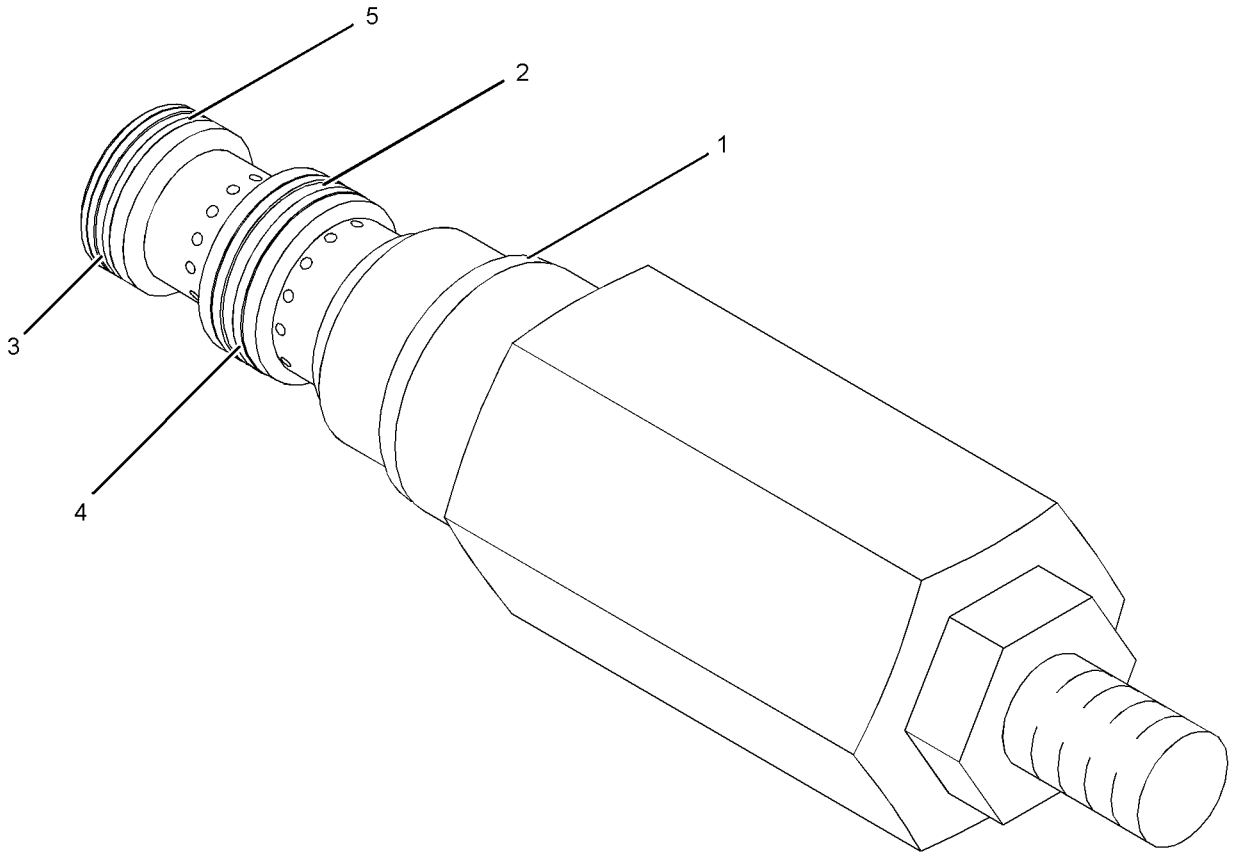

GRAPHIC #1 **<END>** g01230804

HYDRAULIC SYSTEM

207-0695 VALVE GP-PUMP CONTROL–

PRESSURE, FLOW COMPENSATOR–HYDRAULIC FAN

S/N: BXY1-UP

PART OF 228-3636, 228-3638 PUMP GP-PISTON

AN ATTACHMENT

SMCS-5455 **i01571780**

NOTE	REF NO	GRAPHIC REF	PART NUMBER	QTY	PART NAME 1 2 3 4 5 6 (PRODUCT LEVEL)	SEE PAGE
	1	1	**6E-6528**	6	SEAL	
	2	1	**6E-6527**	2	PLUG	
	3	1	**193-3086**	1	RETAINER	
	4	1	**193-3087**	1	SPRING	
	5	1	**5P-9262**	1	SEAL-O-RING	
	6	1	**033-6043**	1	SEAL-O-RING	
	7	1	**6E-3272**	1	SEAT	
	8	1	**6E-6540**	1	PLUG	
M	9	1	**6E-6538**	2	NUT-ADJUSTMENT (M8X1-THD)	
M	10	1	**6E-6537**	2	SCREW-ADJUSTMENT (M8X1X28-MM)	
M	11	1	**6E-6539**	2	NUT-CAP (M8X1-THD)	
	12	1	**6E-3273**	1	SEAT	
	13	1	**6E-6536**	1	PLUG	
	14	1	**6V-8352**	1	SEAL-O-RING	
	15	1	**193-1036**	1	SPRING	
	16	1	**6E-3276**	1	SPRING	
	17	1	**6E-3269**	1	RETAINER-SPRING	
	18	1	**119-0959**	1	PLUG-ORIFICE	
	19	1	**105-2145**	1	VALVE-ORIFICE	

M-METRIC PART

207-0695 **VALVE GP-PUMP CONTROL** *(contd.)* **i01571780**

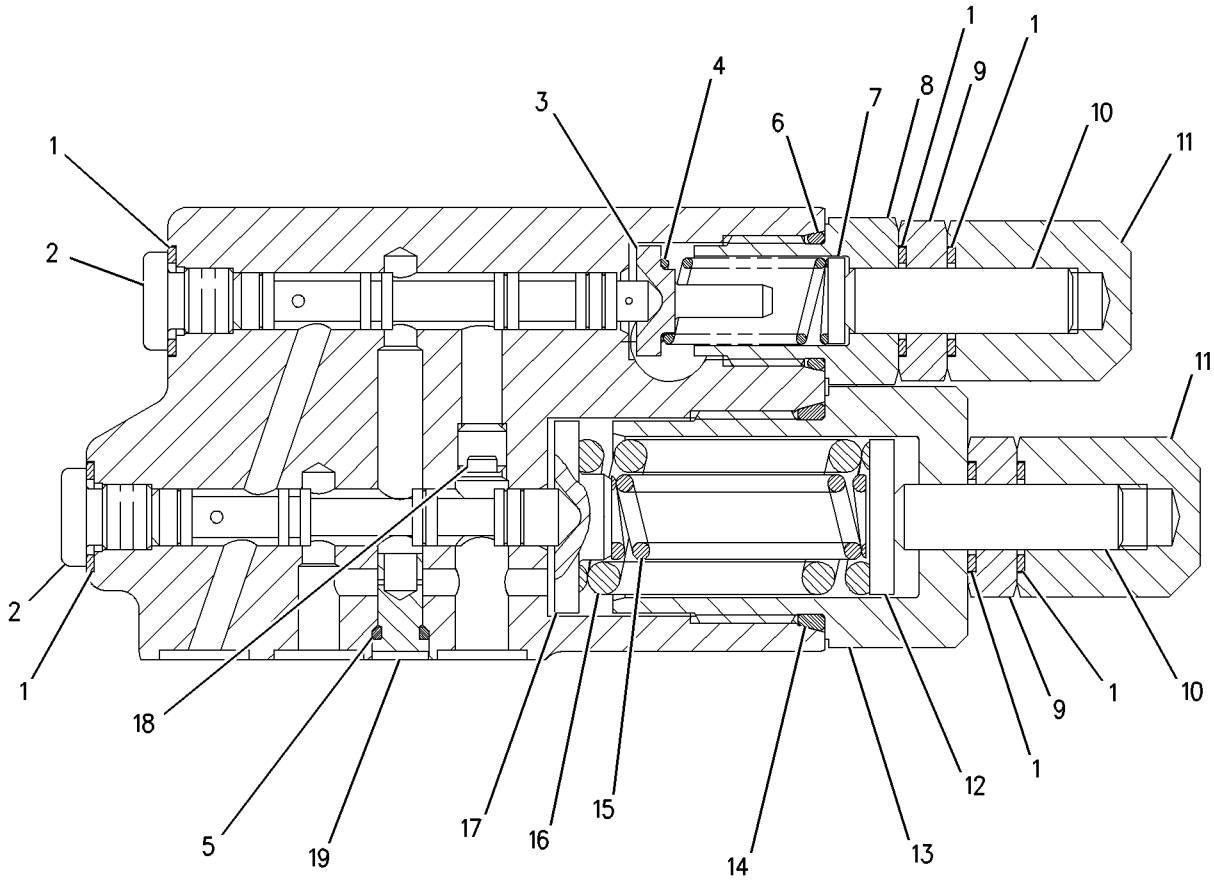

GRAPHIC #1 **<END>** g00817754

HYDRAULIC SYSTEM

273-2130 VALVE GP-REGENERATION—TILT CYLINDER

S/N: BXY1-UP

PART OF 253-4788, 271-4577 VALVE & MTG GP-REGENERATION

SMCS-512R **i02391222**

NOTE	REF NO	GRAPHIC REF	PART NUMBER	QTY	PART NAME 1 2 3 4 5 6 (PRODUCT LEVEL)	SEE PAGE
Y	1	1	**217-6719**	1	ACTUATOR GP-PILOT CONTROL (PROPORTIONAL SOLENOID) (REGEN CONTROL VALVE)	1399
	2	1	**3G-5003**	1	BEARING-SLEEVE	
	4	1	**9L-9188**	1	SPRING-VALVE	
	5	1	**153-9989**	1	PLUG	
	6	1	**153-9990**	1	VALVE	
	7	1	**204-1340**	1	STEM	
	8	1	**273-2128**	1	BODY-VALVE	
	10	1	*162-0177*	3	PLUG AS	
					(EACH INCLUDES)	
		1	**3J-1907**	1	SEAL-O-RING	
		1	**9S-8004**	1	PLUG	
	11	1	**3J-2903**	1	COVER	
	12	1	**4J-0527**	1	SEAL-O-RING	
	13	1	**6K-6307**	1	SEAL-O-RING	
M	14	1	**7X-2543**	2	BOLT (M10X1.5X120-MM)	
M	15	1	**8T-4139**	4	BOLT (M12X1.75X30-MM)	

M-METRIC PART
Y-SEPARATE ILLUSTRATION

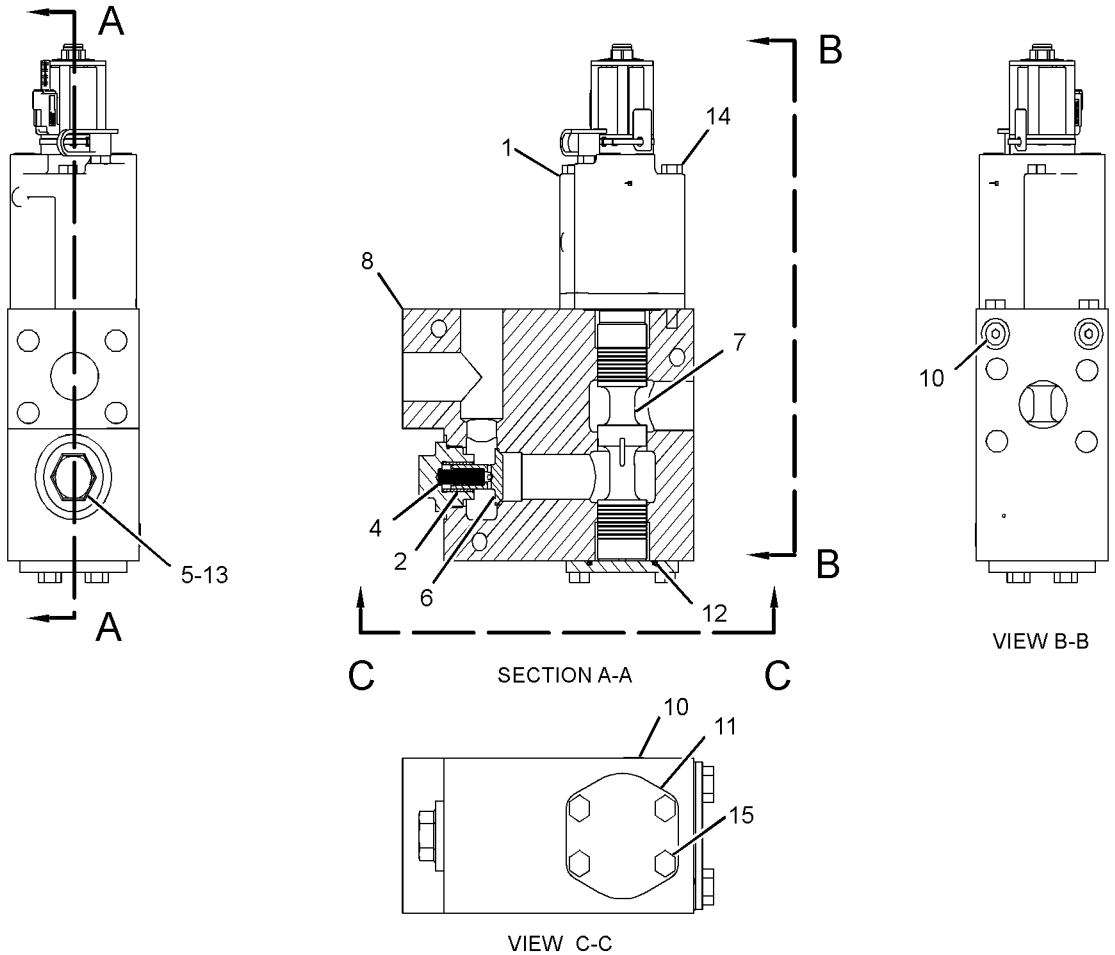

GRAPHIC #1 **<END>** g01249845

HYDRAULIC SYSTEM

117-0159 VALVE GP-RELIEF–MAIN

S/N: BXY1-UP

PART OF 212-8712, 212-8746, 292-8121, 292-8123 VALVE GP-MAIN CONTROL AN ATTACHMENT

SMCS-5069, 5117 **i02259286**

NOTE	REF NO	GRAPHIC REF	PART NUMBER	QTY	PART NAME 1 2 3 4 5 6 (PRODUCT LEVEL)	SEE PAGE
	1	1	**7M-8485**	2	SEAL-O-RING	
	2	1	**4J-0522**	1	SEAL-O-RING	
	3	1	**4T-2770**	1	SPRING	
	4	1	**3K-0360**	1	SEAL-O-RING	
	5	1	**4Y-5812**	1	PLATE	
	6	1	**6E-5510**	1	RETAINER AS	
	7	1	**9X-6395**	1	NUT (3/4-16-THD)	
	8	1	**6E-1127**	1	CAP	
	9	1	**8J-0331**	1	VALVE	
	10	1	**6E-6138**	1	VALVE GP-RELIEF (MAIN)	
		1	**8H-3532**	1	SPRING-VALVE	
	11	1	**185-7876**	1	DOWEL	

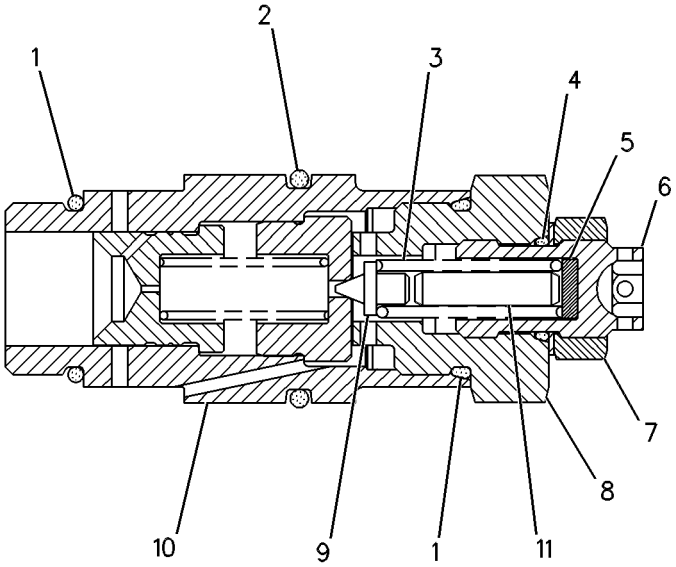

GRAPHIC #1 **<END>** g00255864

HYDRAULIC SYSTEM

117-0160 VALVE GP-RELIEF–LINE

S/N: BXY1-UP
PART OF 222-4436, 291-8508 VALVE GP-CONTROL, 212-8712, 212-8746, 292-8121, 292-8123 VALVE GP-MAIN CONTROL
AN ATTACHMENT

SMCS-5069, 5117 **i03163900**

NOTE	REF NO	GRAPHIC REF	PART NUMBER	QTY	PART NAME 1 2 3 4 5 6 (PRODUCT LEVEL)	SEE PAGE
	1	1	**9T-9992**	1	RING-BACKUP	
	2	1	**032-9313**	1	SEAL-O-RING	
	3	1	**2S-4078**	2	SEAL-O-RING	
	4	1	**3P-1155**	1	SEAL-O-RING	
	5	1	**117-0775**	1	RING-BACKUP	
	6	1	**2P-2975**	1	SEAL-O-RING	

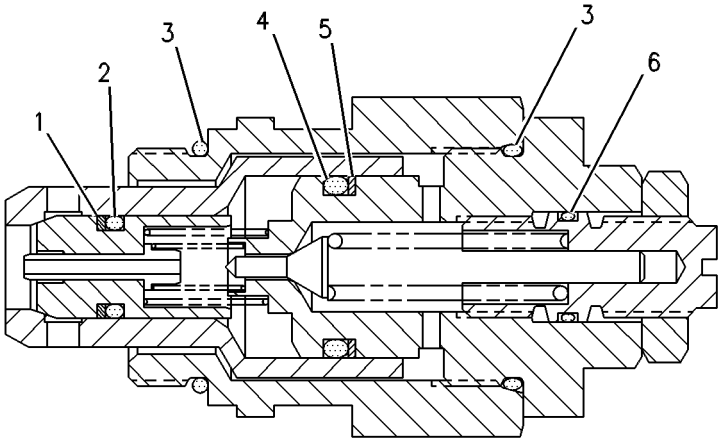

GRAPHIC #1 **<END>** g00263227

HYDRAULIC SYSTEM

117-0161 VALVE GP-RELIEF–LINE

S/N: BXY1-UP
LINE, TILT
PART OF 212-8712, 212-8746, 292-8121, 292-8123 VALVE GP-MAIN CONTROL
AN ATTACHMENT

SMCS-5069, 5117 **i03163920**

NOTE	REF NO	GRAPHIC REF	PART NUMBER	QTY	PART NAME 1 2 3 4 5 6 (PRODUCT LEVEL)	SEE PAGE
	1	1	**9T-9992**	1	RING-BACKUP	
	2	1	**032-9313**	1	SEAL-O-RING	
	3	1	**2S-4078**	2	SEAL-O-RING	
	4	1	**3P-1155**	1	SEAL-O-RING	
	5	1	**117-0775**	1	RING-BACKUP	
	6	1	**2P-2975**	1	SEAL-O-RING	

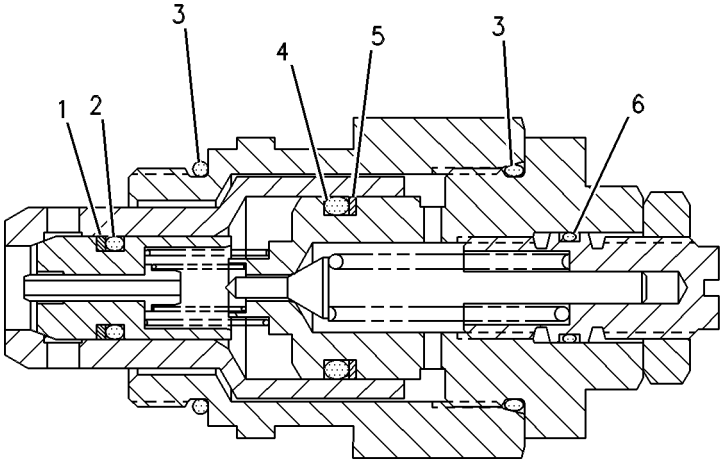

GRAPHIC #1 **<END>** g00263240

HYDRAULIC SYSTEM

125-9349 VALVE GP-RELIEF–LINE

S/N: BXY1-UP

PART OF 212-8712, 212-8746, 292-8121, 292-8123 VALVE GP-MAIN CONTROL

AN ATTACHMENT

SMCS-5069, 5117 **i03163946**

NOTE	REF NO	GRAPHIC REF	PART NUMBER	QTY	PART NAME 1 2 3 4 5 6 (PRODUCT LEVEL)	SEE PAGE
	1	1	**9T-9992**	1	RING-BACKUP	
	2	1	**032-9313**	1	SEAL-O-RING	
	3	1	**2S-4078**	2	SEAL-O-RING	
	4	1	**3P-1155**	1	SEAL-O-RING	
	5	1	**117-0775**	1	RING-BACKUP	
	6	1	**2P-2975**	1	SEAL-O-RING	
					PARTS SHOWN IN GRAPHIC(S) WITHOUT A REFERENCE NUMBER ARE NOT SERVICED SEPARATELY	

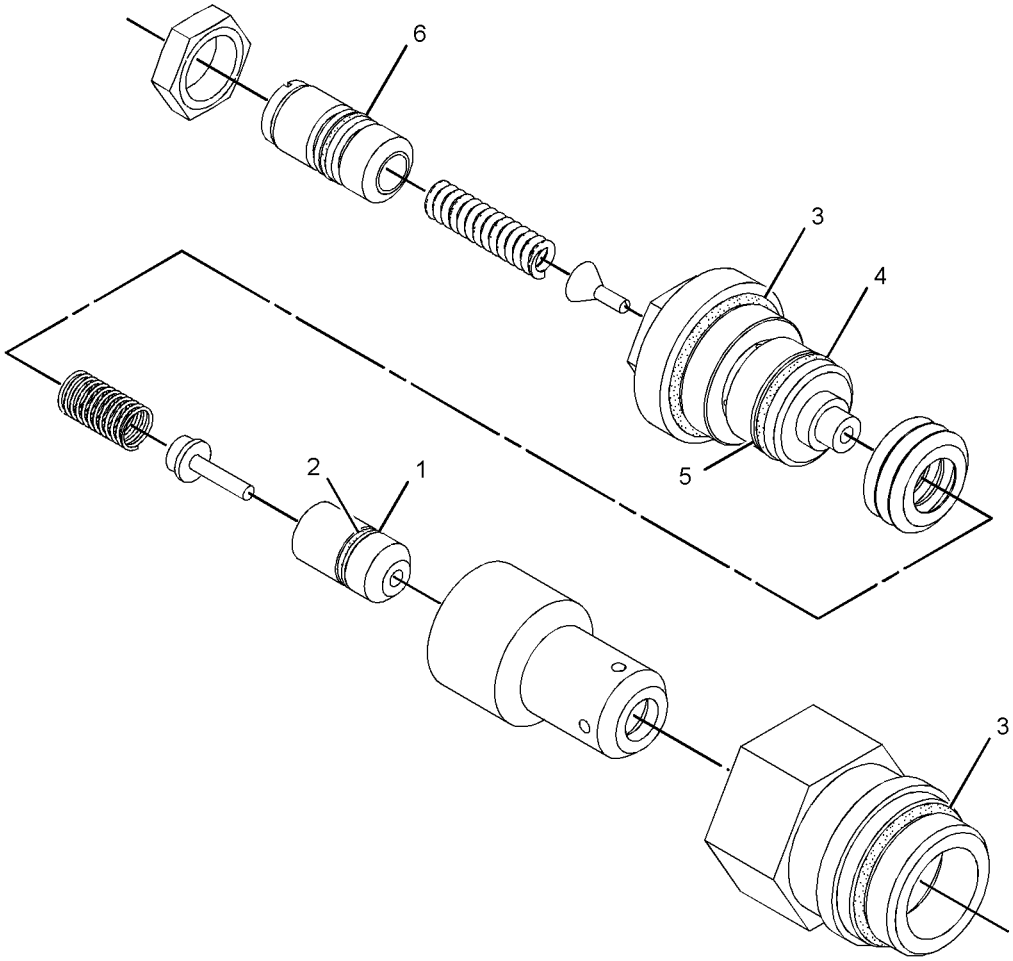

GRAPHIC #1 **<END>** g01691413

HYDRAULIC SYSTEM

129-8293 VALVE GP-RELIEF–LINE, LIFT

S/N: BXY4000-UP

PART OF 222-4436, 291-8508 VALVE GP-CONTROL

AN ATTACHMENT

SMCS-5069, 5117 **i01213086**

NOTE	REF NO	GRAPHIC REF	PART NUMBER	QTY	PART NAME 1 2 3 4 5 6 (PRODUCT LEVEL)	SEE PAGE
	1	1	**9T-9992**	1	RING-BACKUP	
	2	1	**8T-9522**	1	SEAL-O-RING	
	3	1	**2S-4078**	2	SEAL-O-RING	
	4	1	**3P-1155**	1	SEAL-O-RING	
	5	1	**117-0775**	1	RING-BACKUP	
	6	1	**2P-2975**	1	SEAL-O-RING	

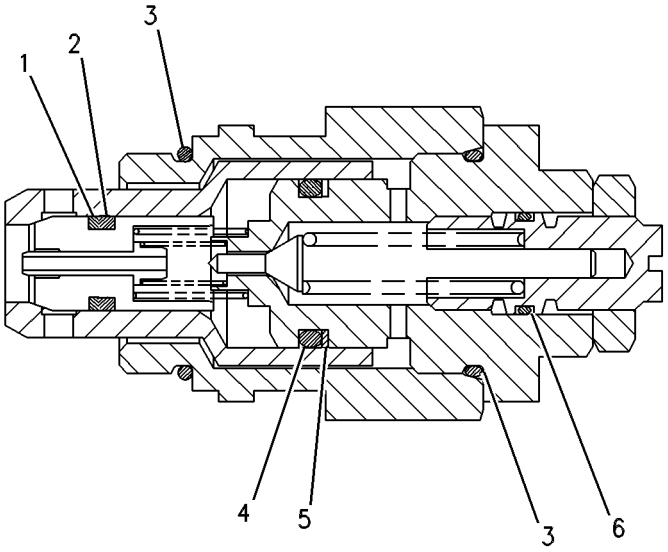

GRAPHIC #1 **<END>** g00087348

HYDRAULIC SYSTEM

139-3544 VALVE GP-RELIEF—STEERING, IMPLEMENT PILOT

S/N: BXY1-3999

PART OF 186-6218 VALVE GP-RELIEF

SMCS-5069, 5117 **i01273398**

NOTE	REF NO	GRAPHIC REF	PART NUMBER	QTY	PART NAME 1 2 3 4 5 6 (PRODUCT LEVEL)	SEE PAGE
	1	1	**6V-6923**	1	RING-BACKUP	
	2	1	**033-6033**	1	SEAL-O-RING	
	3	1	**2M-9780**	1	SEAL-O-RING	

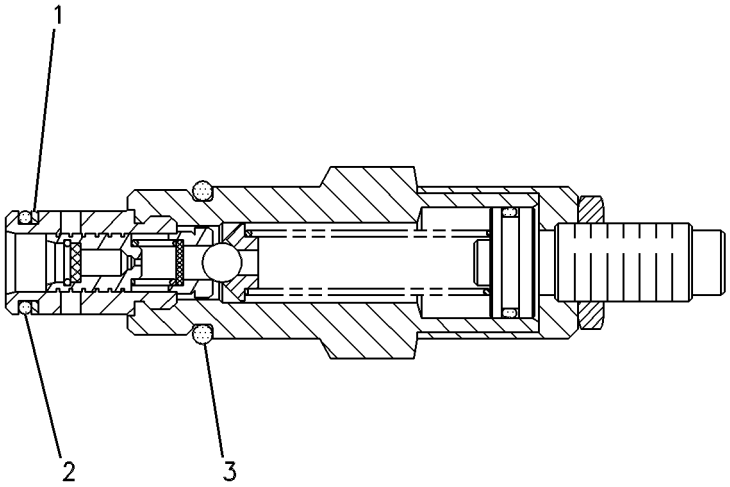

GRAPHIC #1 **<END>** g00086700

HYDRAULIC SYSTEM

144-0221 VALVE GP-RELIEF–LINE, LIFT

S/N: BXY4000-UP

PART OF 222-4436, 291-8508 VALVE GP-CONTROL

AN ATTACHMENT

SMCS-5069, 5117 **i01222559**

NOTE	REF NO	GRAPHIC REF	PART NUMBER	QTY	PART NAME 1 2 3 4 5 6 (PRODUCT LEVEL)	SEE PAGE
	1	1	**9T-9992**	1	RING-BACKUP	
	2	1	**8T-9522**	1	SEAL-O-RING	
	3	1	**2S-4078**	2	SEAL-O-RING	
	4	1	**3P-1155**	1	SEAL-O-RING	
	5	1	**117-0775**	1	RING-BACKUP	
	6	1	**2P-2975**	1	SEAL-O-RING	

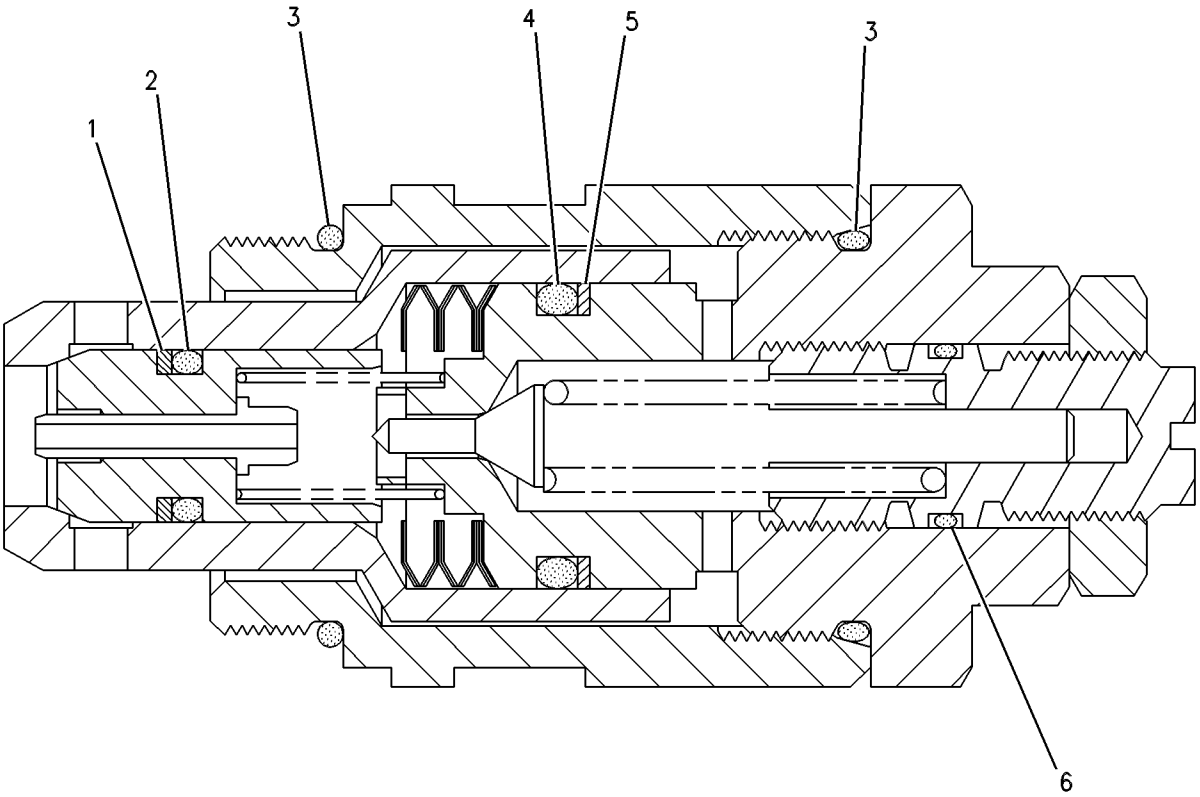

GRAPHIC #1 **<END>** g00273440

HYDRAULIC SYSTEM

172-5481 VALVE GP-RELIEF–LINE

S/N: BXY1-UP
LINE, TILT
PART OF 291-8508 VALVE GP-CONTROL, 212-8746, 292-8123 VALVE GP-MAIN CONTROL
AN ATTACHMENT

SMCS-5069, 5117 **i01206866**

NOTE	REF NO	GRAPHIC REF	PART NUMBER	QTY	PART NAME 1 2 3 4 5 6 (PRODUCT LEVEL)	SEE PAGE
	1	1	**9T-9992**	1	RING-BACKUP	
	2	1	**8T-9522**	1	SEAL-O-RING	
	3	1	**2S-4078**	2	SEAL-O-RING	
	4	1	**3P-1155**	1	SEAL-O-RING	
	5	1	**117-0775**	1	RING-BACKUP	
	6	1	**2P-2975**	1	SEAL-O-RING	

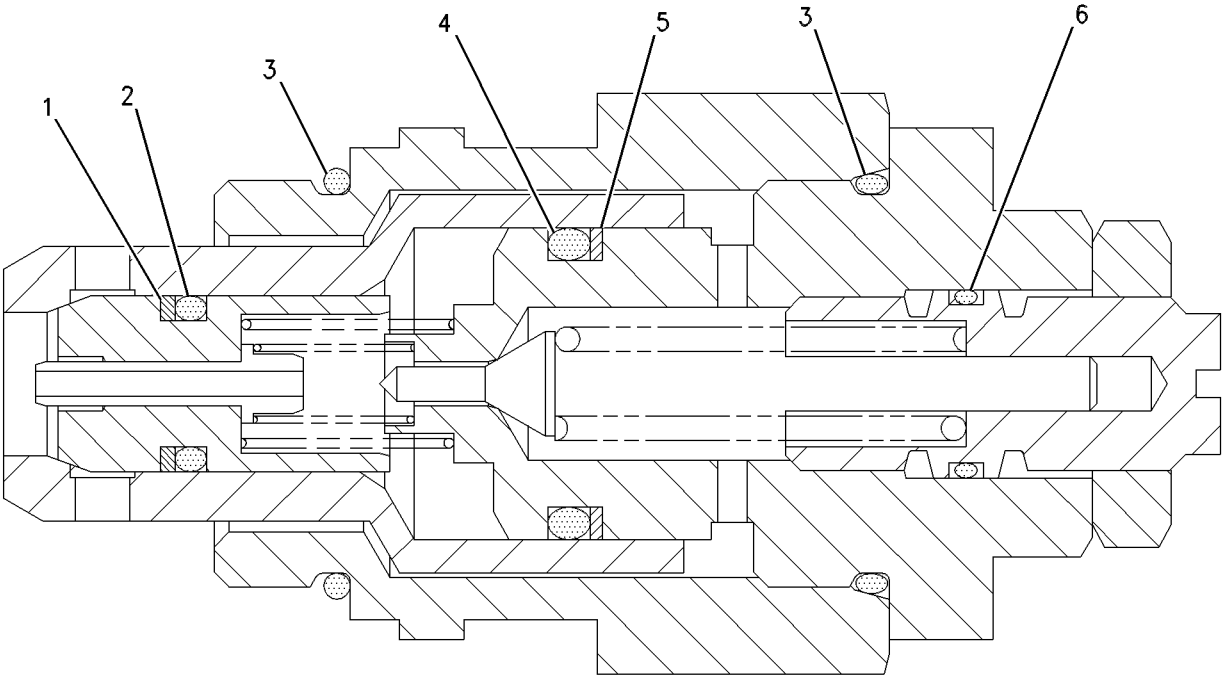

GRAPHIC #1 **<END>** g00586275

HYDRAULIC SYSTEM

186-6218 VALVE GP-RELIEF—STEERING, IMPLEMENT PILOT

S/N: BXY1-3999

PART OF 230-2400 LINES GP-HYDRAULIC

SMCS-5069, 5117 **i03714920**

NOTE	REF NO	GRAPHIC REF	PART NUMBER	QTY	PART NAME 1 2 3 4 5 6 (PRODUCT LEVEL)	SEE PAGE
	1	1	**138-3815**	1	MANIFOLD	
Y	2	1	**139-3544**	1	VALVE GP-RELIEF (STEERING & IMPLEMENT PILOT)	1646
	3	1	*148-8407*	1	PLUG AS	
		1	**3J-1907**	1	SEAL-O-RING	
		1	**9S-4191**	1	PLUG-O-RING	

Y-SEPARATE ILLUSTRATION

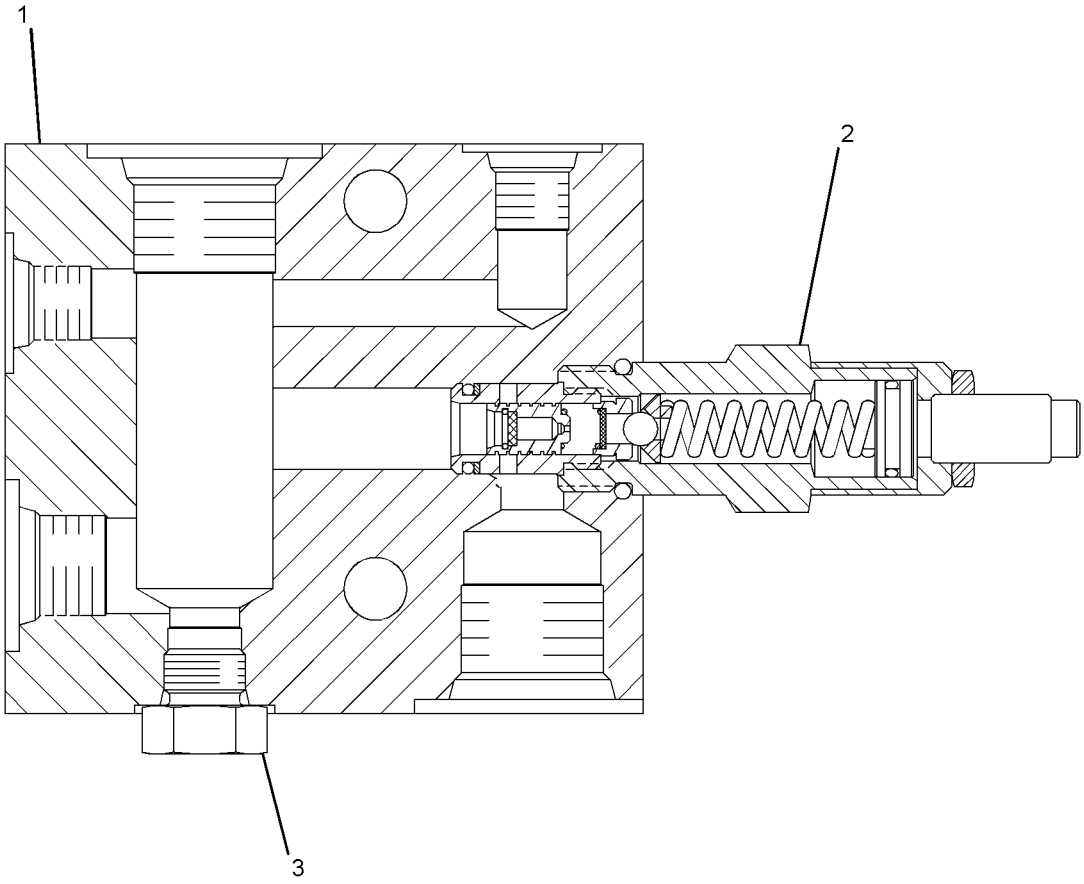

GRAPHIC #1 **<END>** g02049533

HYDRAULIC SYSTEM

276-3649 VALVE GP-RELIEF

S/N: BXY4000-UP

PART OF 345-3932 LINES GP-HYDRAULIC

SMCS-5069, 5117 **i02876868**

NOTE	REF NO	GRAPHIC REF	PART NUMBER	QTY	PART NAME 1 2 3 4 5 6 (PRODUCT LEVEL)	SEE PAGE
	1	1	**138-3815**	1	MANIFOLD	
Y	2	1	**276-3650**	1	VALVE GP-RELIEF (PILOT)	1651
	3	1	*148-8407*	1	PLUG AS	
		1	**3J-1907**	1	SEAL-O-RING	
		1	**9S-4191**	1	PLUG-O-RING	

Y-SEPARATE ILLUSTRATION

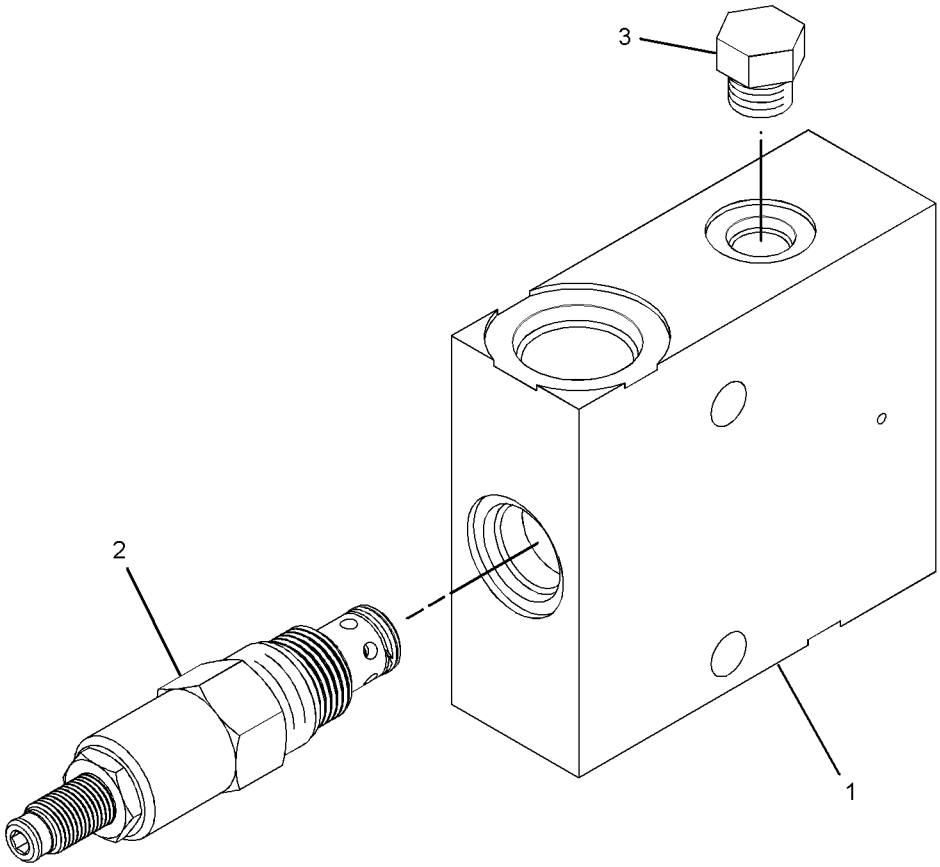

GRAPHIC #1 **<END>** g01438867

HYDRAULIC SYSTEM

276-3650 VALVE GP-RELIEF

S/N: BXY4000-UP

PART OF 276-3649 VALVE GP-RELIEF

SMCS-5069, 5117 **i02877206**

NOTE	REF NO	GRAPHIC REF	PART NUMBER	QTY	PART NAME 1 2 3 4 5 6 (PRODUCT LEVEL)	SEE PAGE
	1	1	**6V-6923**	1	RING-BACKUP	
	2	1	**033-6033**	1	SEAL-O-RING	
	3	1	**2M-9780**	1	SEAL-O-RING	

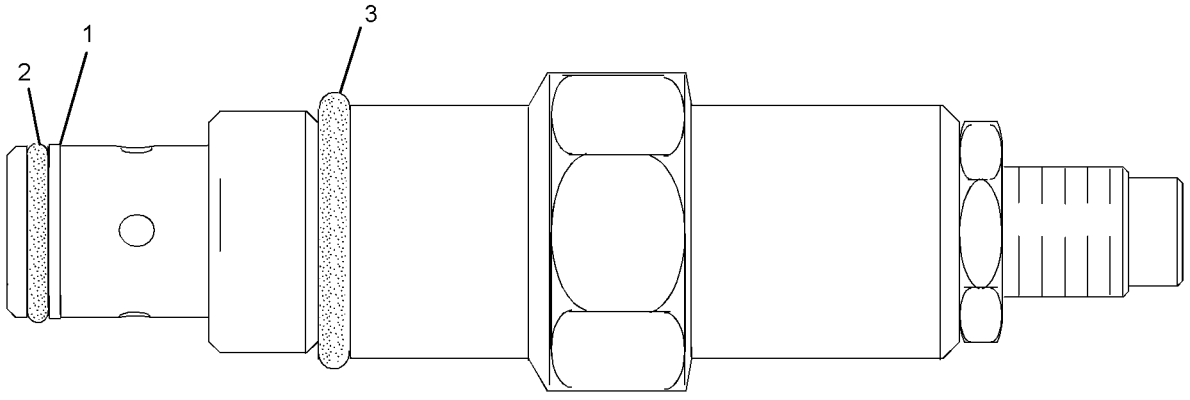

GRAPHIC #1 **<END>** g01439129

HYDRAULIC SYSTEM

334-8332 VALVE GP-RELIEF

S/N: BXY4000-UP
PART OF 222-4436, 291-8508 VALVE GP-CONTROL
AN ATTACHMENT

SMCS-5069, 5117 **i03762191**

NOTE	REF NO	GRAPHIC REF	PART NUMBER	QTY	PART NAME 1 2 3 4 5 6 (PRODUCT LEVEL)	SEE PAGE
	1	1	**4T-2770**	1	SPRING	
	2	1	**4Y-5812**	1	PLATE	
	3	1	**6E-1127**	1	CAP	
	4	1	**6E-5510**	1	RETAINER AS	
	5	1	**6E-6138**	1	VALVE GP-RELIEF	
		1	**8H-3532**	1	SPRING-VALVE	
	6	1	**8J-0331**	1	VALVE	
	7	1	**9X-6395**	1	NUT (3/4-16-THD)	
	8	1	**185-7876**	1	DOWEL	
	9	1	**3K-0360**	1	SEAL-O-RING	
	10	1	**4J-0522**	1	SEAL-O-RING	
	11	1	**7M-8485**	2	SEAL-O-RING	

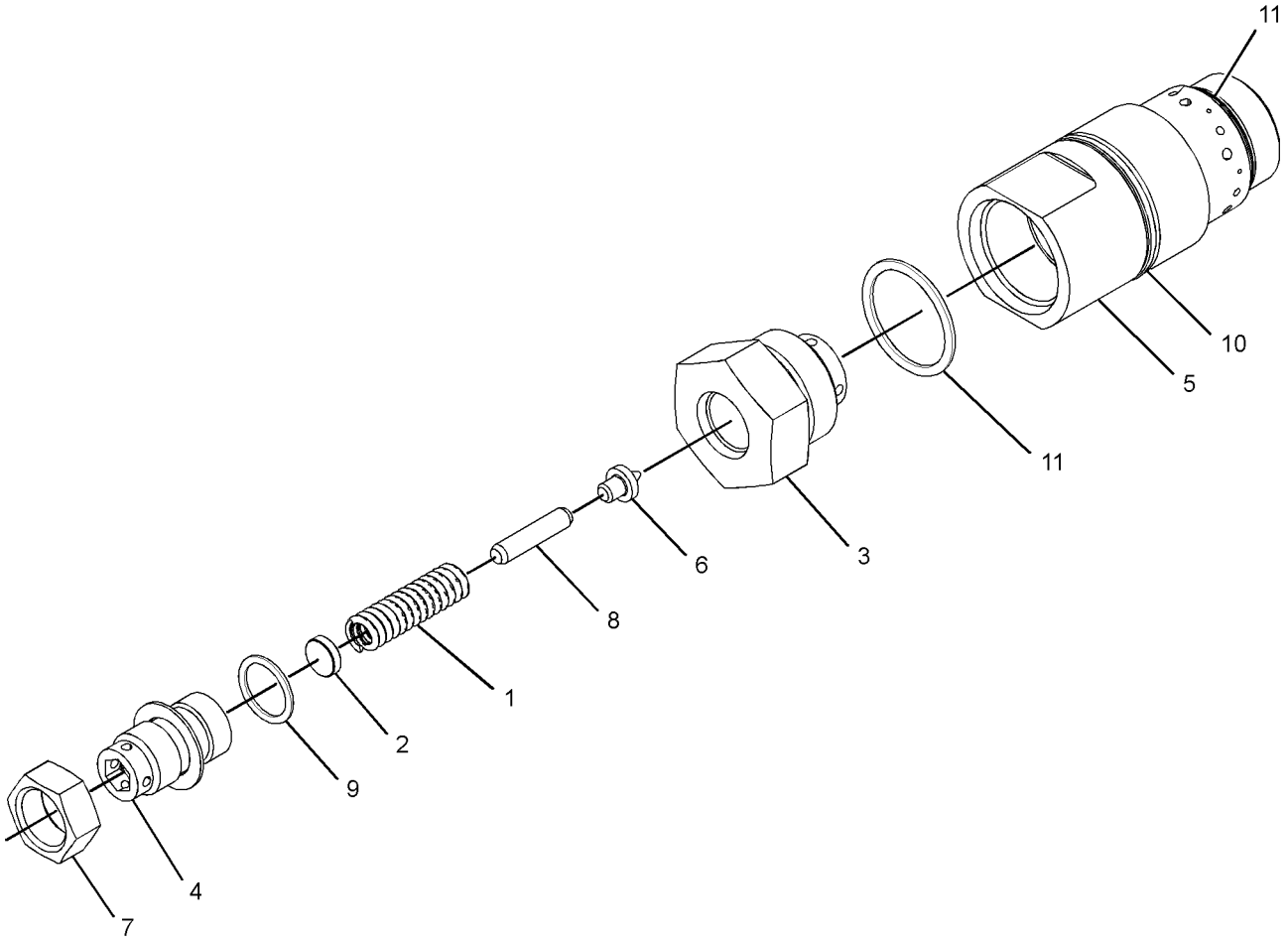

GRAPHIC #1 **<END>** g02035653

HYDRAULIC SYSTEM

259-6275 VALVE GP-RIDE CONTROL

S/N: BXY1-UP
PART OF 254-6063 CONTROL & LINES GP-RIDE
AN ATTACHMENT

SMCS-5004, 5054, 5066 **i02224713**

NOTE	REF NO	GRAPHIC REF	PART NUMBER	QTY	PART NAME 1 2 3 4 5 6 (PRODUCT LEVEL)	SEE PAGE
M	1	1	**8T-4185**	2	BOLT (M10X1.5X50-MM)	
	2	1	**4T-1701**	1	SPRING	
	3	1	**6E-3303**	1	STEM	
	4	1	**4J-0522**	1	SEAL-O-RING	
	5	1	**8J-6815**	1	PLUG-ORIFICE	
Y	6	1	**152-8340**	1	VALVE GP-SOLENOID (24-VOLT) (RIDE CONTROL)	1659
	8	1	*222-4737*	2	PLUG AS	
					(EACH INCLUDES)	
		1	**4J-7533**	1	SEAL-O-RING	
		1	**9S-4180**	1	PLUG	
	9	1	**6V-5555**	1	SEAL-O-RING	
	10	1	*148-8407*	3	PLUG AS	
					(EACH INCLUDES)	
		1	**3J-1907**	1	SEAL-O-RING	
		1	**9S-4191**	1	PLUG-O-RING	
	11	1	*164-5616*	1	PLUG AS	
		1	**2S-4078**	1	SEAL-O-RING	
		1	**9S-6130**	1	PLUG	

M-METRIC PART
Y-SEPARATE ILLUSTRATION

259-6275 VALVE GP-RIDE CONTROL *(contd.)* **i02224713**

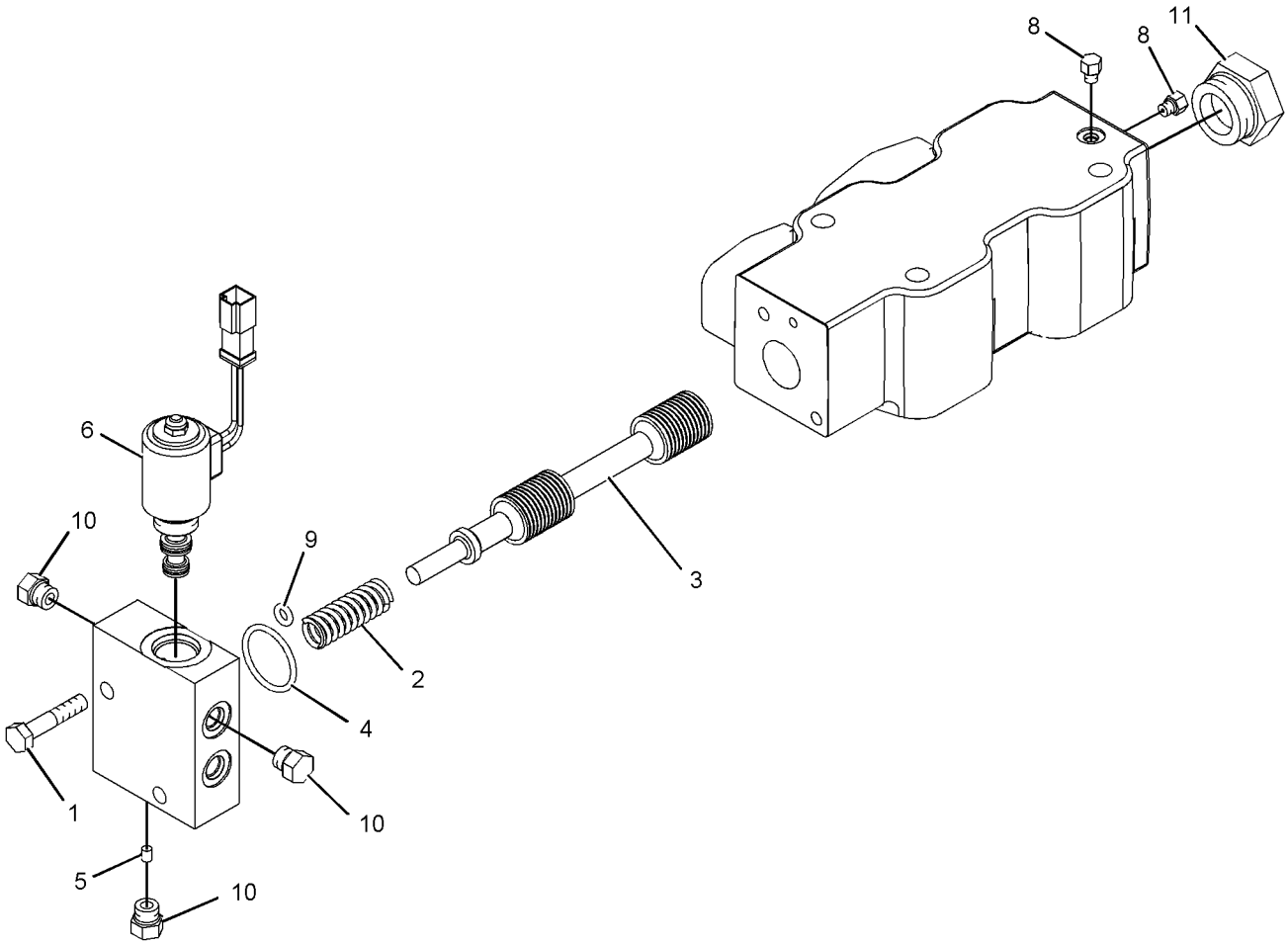

GRAPHIC #1 **<END>** g01127986

HYDRAULIC SYSTEM

125-3657 VALVE GP-SHUTTLE

S/N: BXY1-UP
PART OF 141-1481 VALVE GP-SHUTTLE
AN ATTACHMENT

SMCS-5079 **i02679589**

NOTE	REF NO	GRAPHIC REF	PART NUMBER	QTY	PART NAME 1 2 3 4 5 6 (PRODUCT LEVEL)	SEE PAGE
	1	1	**2M-9780**	1	SEAL-O-RING	
	2	1	**6V-5142**	1	SEAL-O-RING	
	3	1	**095-1751**	1	SEAL-O-RING	
	4	1	**161-6149**	1	SEAL-O-RING	
	5	1	**169-1617**	2	RING-BACKUP	
	6	1	**169-1616**	2	RING-BACKUP	
	7	1	**161-6161**	2	RING-BACKUP	

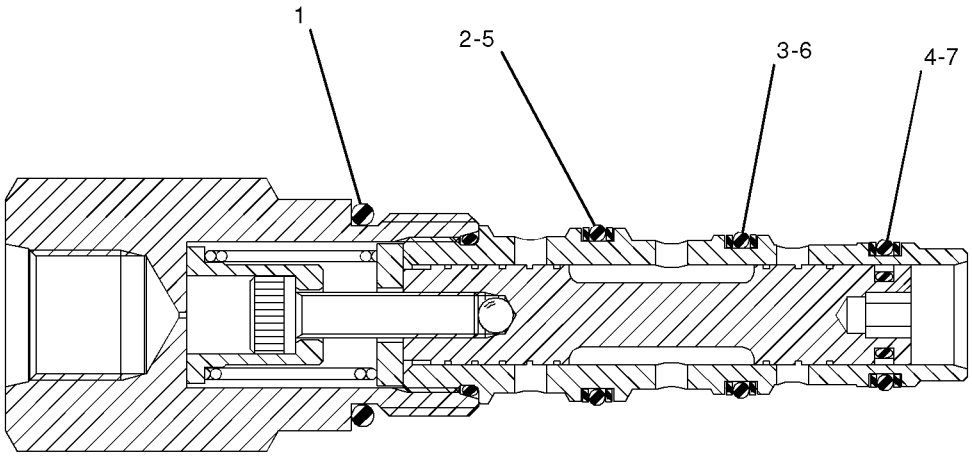

GRAPHIC #1 **<END>** g00764645

HYDRAULIC SYSTEM

141-1481 VALVE GP-SHUTTLE

S/N: BXY1-UP
PART OF 254-6063 CONTROL & LINES GP-RIDE
AN ATTACHMENT

SMCS-5079 **i01912777**

NOTE	REF NO	GRAPHIC REF	PART NUMBER	QTY	PART NAME 1 2 3 4 5 6 (PRODUCT LEVEL)	SEE PAGE
Y	1	1	**125-3657**	1	VALVE GP-SHUTTLE	1655

Y-SEPARATE ILLUSTRATION

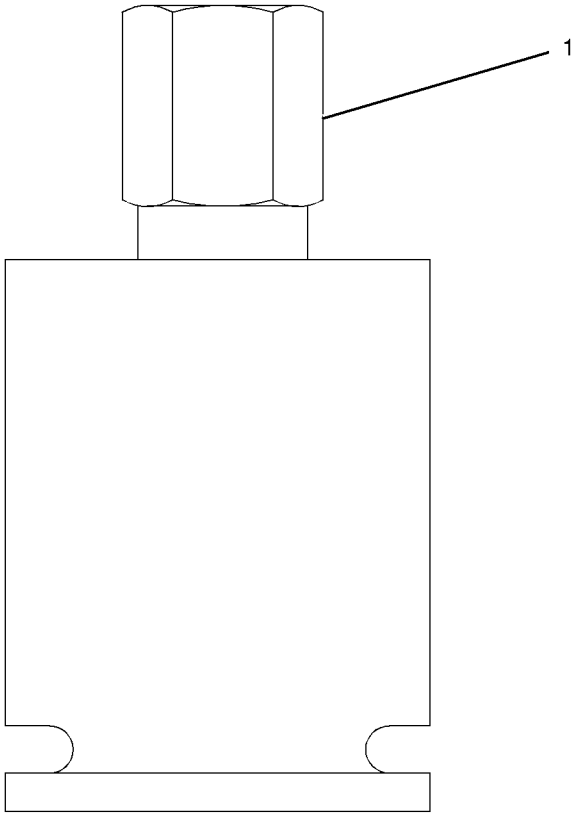

GRAPHIC #1 **<END>** g00996316

HYDRAULIC SYSTEM

147-1223 VALVE GP-SOLENOID

S/N: BXY4000-UP
24 VOLT
PART OF 173-7455 VALVE GP-SOLENOID
AN ATTACHMENT

SMCS-5132, 5479 **i03665194**

NOTE	REF NO	GRAPHIC REF	PART NUMBER	QTY	PART NAME 1 2 3 4 5 6 (PRODUCT LEVEL)	SEE PAGE
	1	1	**152-8332**	1	CARTRIDGE AS-VALVE	
	2	1	**218-9894**	1	COIL AS (24-VOLT)	
		1	**1S-9593**	2	STRAP-CABLE	
		1	**8T-8729**	2	PIN-CONNECTOR (16-GA TO 18-GA)	
		1	**102-8802**	1	KIT-RECEPTACLE (2-PIN)	
					(INCLUDES RECEPTACLE AS & WEDGE)	
	3	1	**111-0343**	1	LOCKNUT (5/16-18-THD)	
	4	1	**8C-9987**	1	WASHER (8.3X28X2.5-MM THK)	
					AVAILABLE REPAIR KIT(S):	
			7T-9766	1	KIT-SEAL (SOLENOID VALVE)	
					(INCLUDES SEALS & RINGS)	

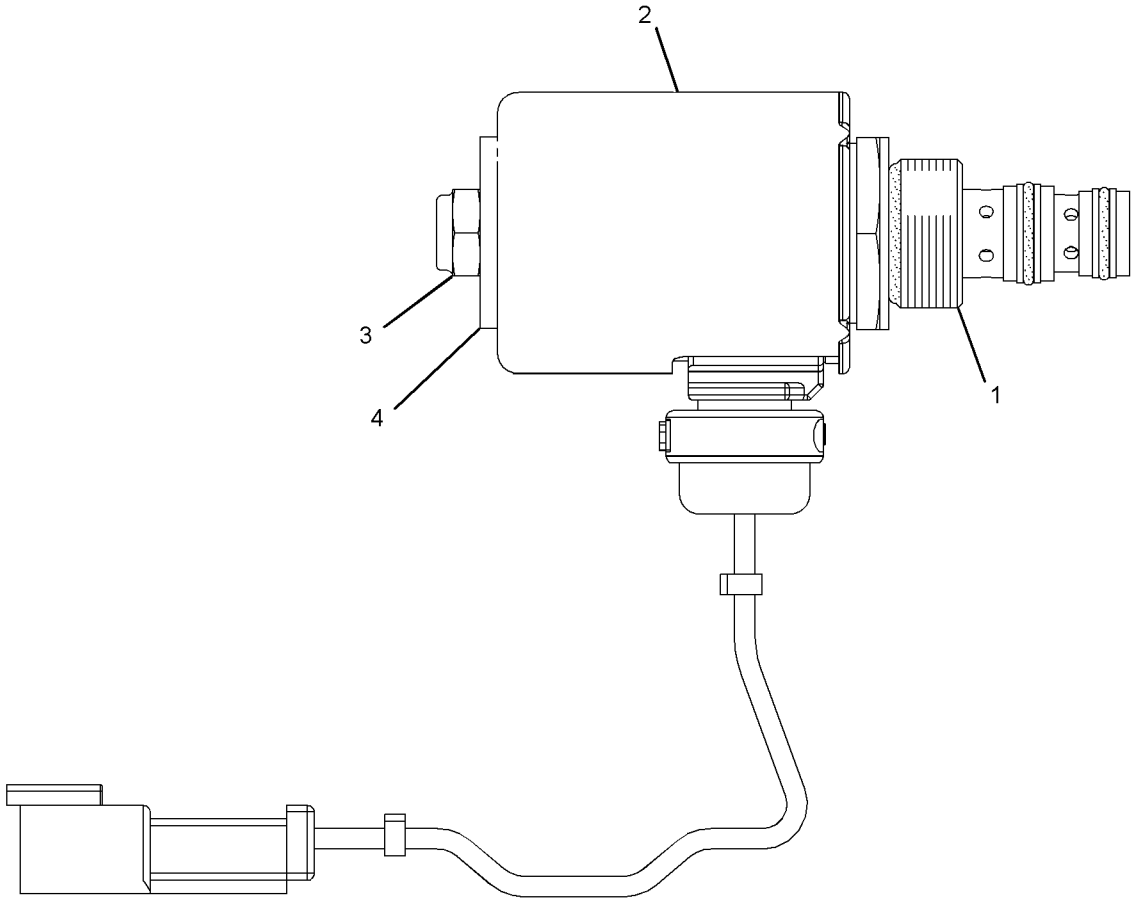

GRAPHIC #1 **<END>** g01973317

HYDRAULIC SYSTEM

151-7455 VALVE GP-SOLENOID

S/N: BXY1-UP

PART OF 132-6133, 201-0218, 298-2500, 298-2501, 315-8815, 315-8830 VALVE & MTG GP-MAIN CONTROL

AN ATTACHMENT

SMCS-5132, 5479 **i03743572**

NOTE	REF NO	GRAPHIC REF	PART NUMBER	QTY	PART NAME 1 2 3 4 5 6 (PRODUCT LEVEL)	SEE PAGE
	1	1	**138-0549**	1	BODY	
Y	2	1	**149-2610**	1	VALVE GP-SOLENOID (24-VOLT) (HYDRAULIC LOCKOUT)	884

Y-SEPARATE ILLUSTRATION

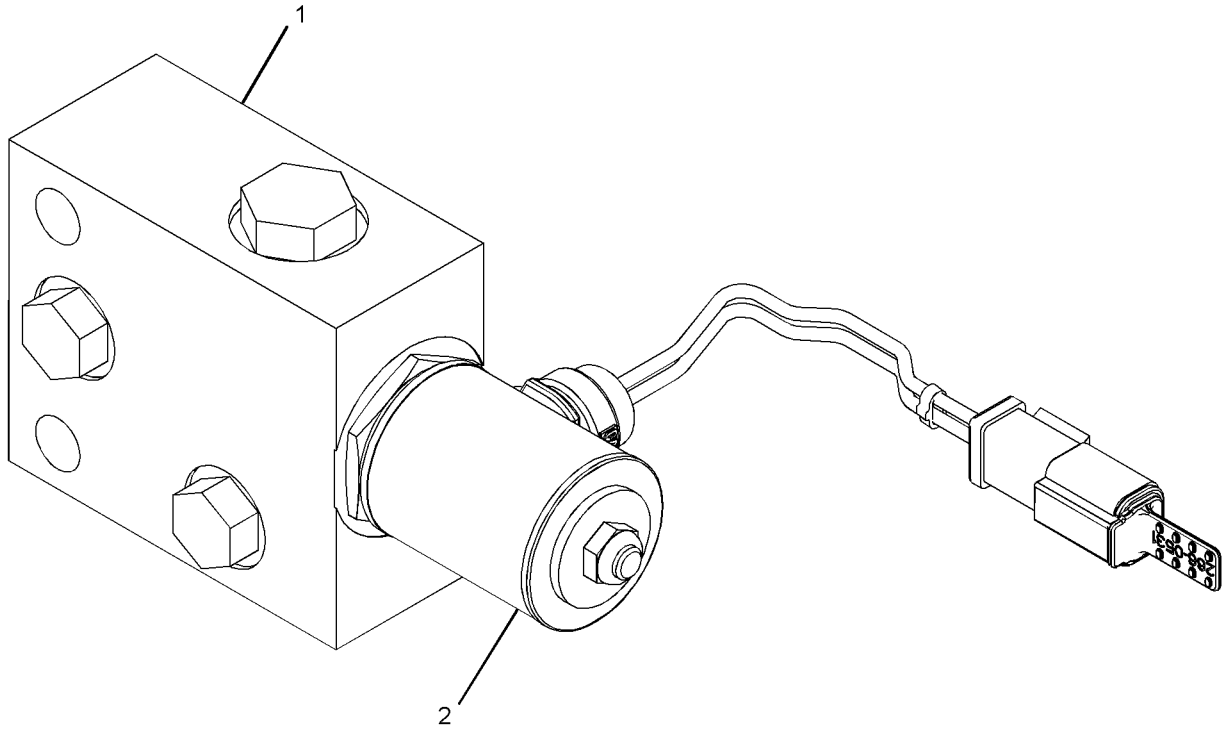

GRAPHIC #1 **<END>** g02061464

HYDRAULIC SYSTEM

152-8340 VALVE GP-SOLENOID

S/N: BXY1-UP
24-VOLT
PART OF 259-6275 VALVE GP-RIDE CONTROL
AN ATTACHMENT

SMCS-5132, 5479 **i03561340**

NOTE	REF NO	GRAPHIC REF	PART NUMBER	QTY	PART NAME 1 2 3 4 5 6 (PRODUCT LEVEL)	SEE PAGE
	1	1	**8C-9987**	1	WASHER (8.3X28X2.5-MM THK)	
	2	1	**111-0343**	1	LOCKNUT (5/16-18-THD)	
J	3	1	**152-8338**	1	CARTRIDGE AS	
		1	**8C-9987**	1	WASHER (8.3X28X2.5-MM THK)	
		1	**111-0343**	1	LOCKNUT (5/16-18-THD)	
	4	1	**218-9894**	1	COIL AS	
					AVAILABLE REPAIR KIT(S):	
J			**197-7701**	1	KIT-SEAL (SOLENOID VALVE)	
					(INCLUDES SEALS & RINGS)	

J-KIT MARKED J SERVICES PARTS MARKED J

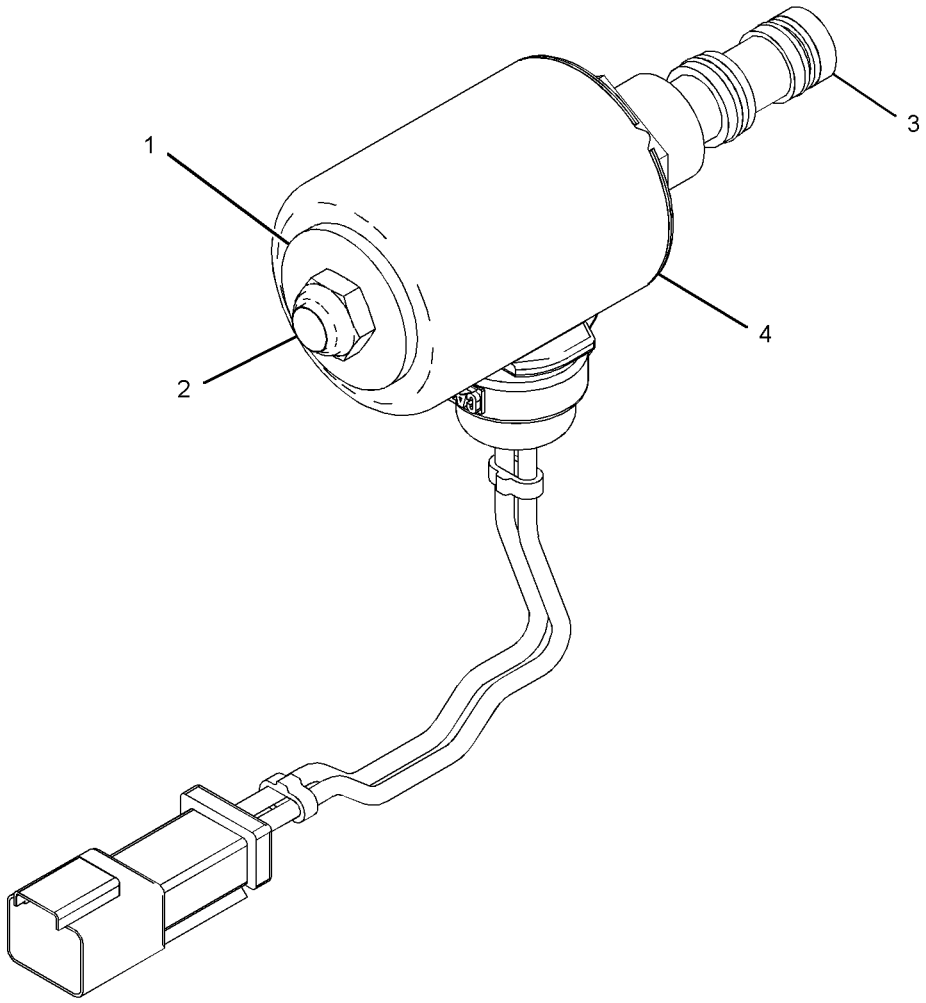

GRAPHIC #1 **<END>** g01595316

HYDRAULIC SYSTEM

173-7455 VALVE GP-SOLENOID

S/N: BXY4000-UP

PART OF 315-8815, 315-8830 VALVE & MTG GP-MAIN CONTROL

AN ATTACHMENT

SMCS-5132, 5479 **i01764012**

NOTE	PART NUMBER	QTY	PART NAME 1 2 3 4 5 6 (PRODUCT LEVEL)	SEE PAGE
Y	**147-1223**	1	VALVE GP-SOLENOID (24-VOLT)	1657
	7T-9745	1	MANIFOLD-VALVE	

Y-SEPARATE ILLUSTRATION

<END>

HYDRAULIC SYSTEM

183-7595 VALVE GP-SOLENOID—DEMAND FAN

S/N: BXY1-UP
24-VOLT
PART OF 191-8735 VALVE GP-DEMAND FAN

SMCS-5132, 5479 **i03593444**

NOTE	REF NO	GRAPHIC REF	PART NUMBER	QTY	PART NAME 1 2 3 4 5 6 (PRODUCT LEVEL)	SEE PAGE
	1	1	**312-8629**	1	COIL AS	
	2	1	*189-8624*	1	ADAPTER AS	
		1	**8L-2786**	1	SEAL-O-RING	
		1	**033-5879**	1	SEAL-O-RING	
		1	**033-6033**	1	SEAL-O-RING	
		1	**212-6027**	1	RING	
		1	**221-9963**	1	RING	
	3	1	**191-9247**	1	WASHER (19.15X31.65X2.36-MM THK)	
	4	1	**198-2914**	1	NUT (3/4-32-THD)	
	5	1	**316-1438**	1	CARTRIDGE AS	
		1	**214-7568**	2	SEAL-O-RING	

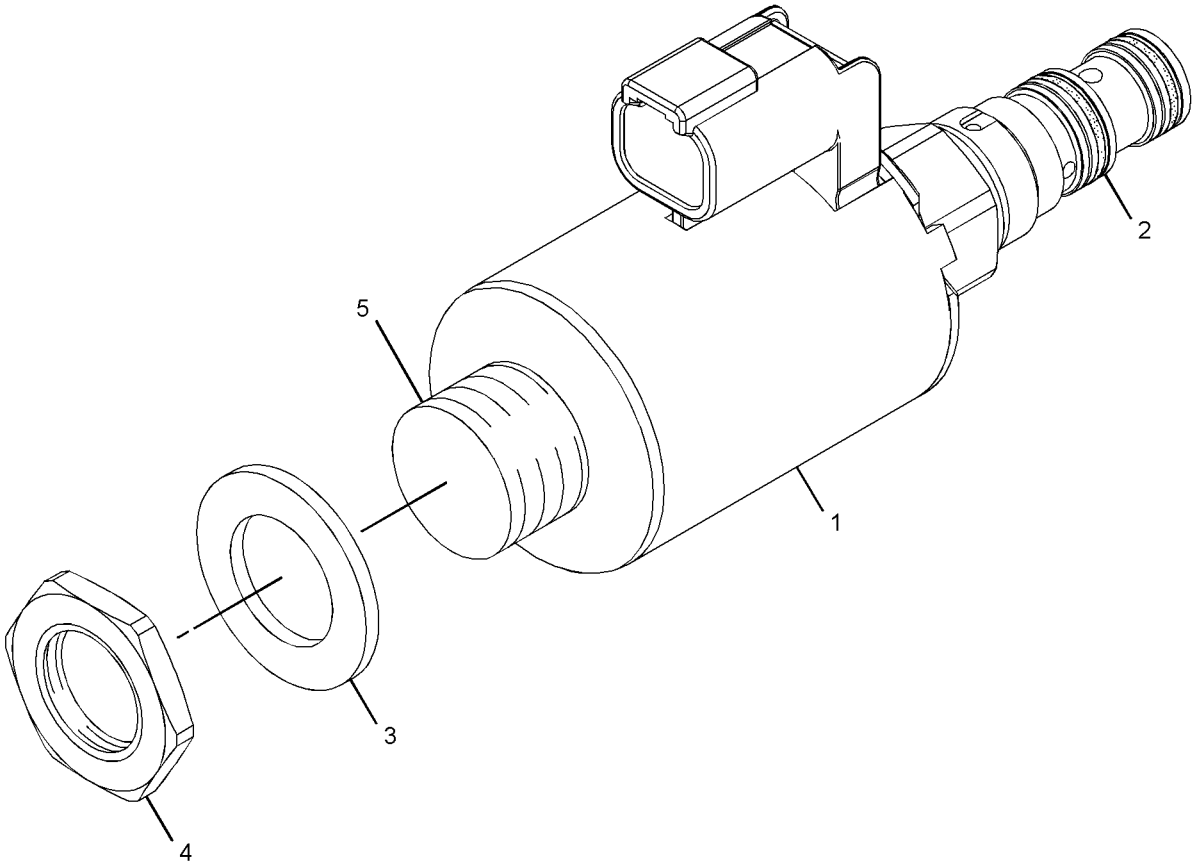

GRAPHIC #1 **<END>** g01936941

IMPLEMENTS

231-8177 BOOM & BEARING AS

S/N: BXY1-UP

PART OF 201-1049 BOOM GP-LOADER, 255-0042, 298-6964 LIFT AR

AN ATTACHMENT

SMCS-6501 **i03642468**

NOTE	REF NO	GRAPHIC REF	PART NUMBER	QTY	PART NAME 1 2 3 4 5 6 (PRODUCT LEVEL)	SEE PAGE
	1	1	**339-0314**	2	BEARING	
	2	1	**152-3743**	2	BEARING	
	3	1	**339-0313**	2	BEARING	
	4	1	**152-3752**	1	SPACER	
	5	1	**157-3612**	1	BLOCK	
	6	1	**171-5427**	2	BEARING	
	7	1	**231-8178**	1	BOOM AS	
	8	1	*148-8395*	4	PLUG AS	
					(EACH INCLUDES)	
		1	**3K-0360**	1	SEAL-O-RING	
		1	**9S-8005**	1	PLUG-O-RING	

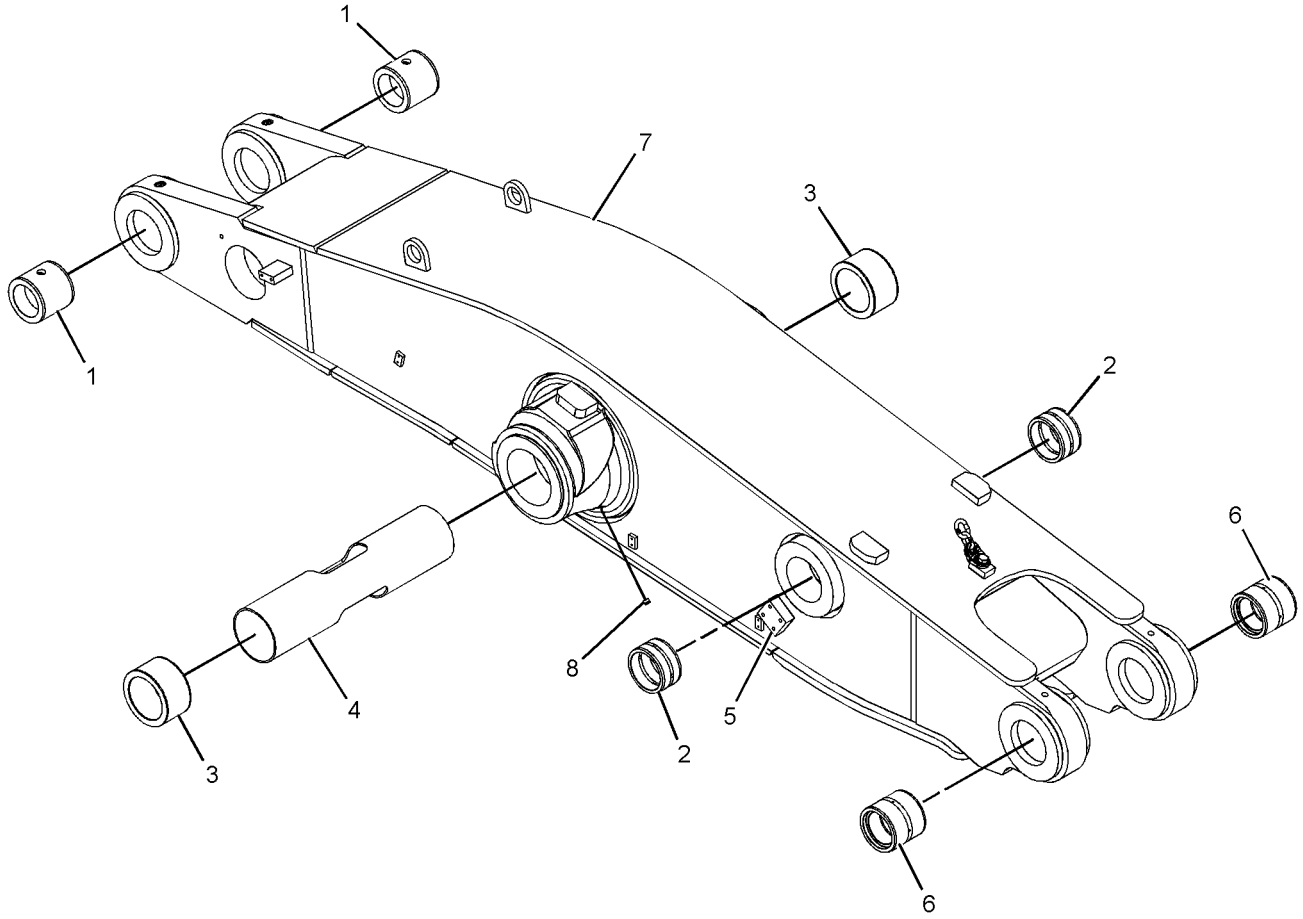

GRAPHIC #1 **<END>** g01113230

248-6340 BOOM & BEARING AS

S/N: BXY1-UP

PART OF 255-8204 BOOM GP-LOADER, 255-0040, 298-6962 LIFT AR AN ATTACHMENT

SMCS-6501 **i03642469**

NOTE	REF NO	GRAPHIC REF	PART NUMBER	QTY	PART NAME 1 2 3 4 5 6 (PRODUCT LEVEL)	SEE PAGE
	1	1	**339-0314**	2	BEARING	
	2	1	**152-3743**	2	BEARING	
	3	1	**339-0313**	2	BEARING	
	4	1	**152-3752**	1	SPACER	
	5	1	**157-3612**	1	BLOCK	
	6	1	**171-5427**	2	BEARING	
	7	1	**248-6341**	1	BOOM AS	
	8	1	*148-8395*	4	PLUG AS	
					(EACH INCLUDES)	
		1	**3K-0360**	1	SEAL-O-RING	
		1	**9S-8005**	1	PLUG-O-RING	

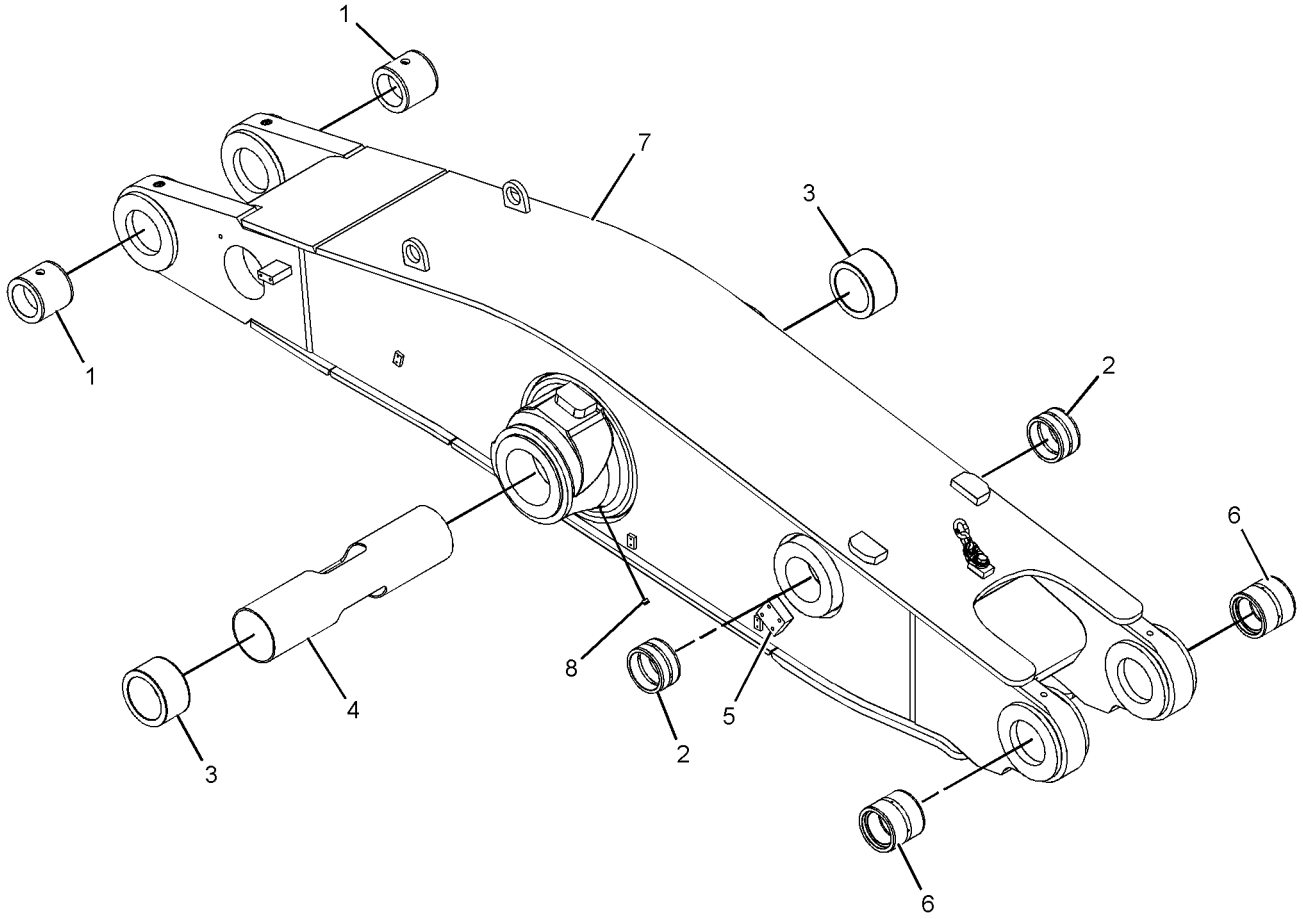

GRAPHIC #1 **<END>** g01113230

IMPLEMENTS

201-1049 BOOM GP-LOADER

S/N: BXY1-UP
4.25-M
PART OF 255-0043, 298-6965 LIFT AR
AN ATTACHMENT

SMCS-6107, 6117 **i02174627**

NOTE	REF NO	GRAPHIC REF	PART NUMBER	QTY	PART NAME 1 2 3 4 5 6 (PRODUCT LEVEL)	SEE PAGE
Y	1	1	**231-8177**	1	BOOM & BEARING AS	1662
	2	1	**103-5350**	4	PLATE	
	3	1	**6C-6739**	2	BLOCK	

Y-SEPARATE ILLUSTRATION

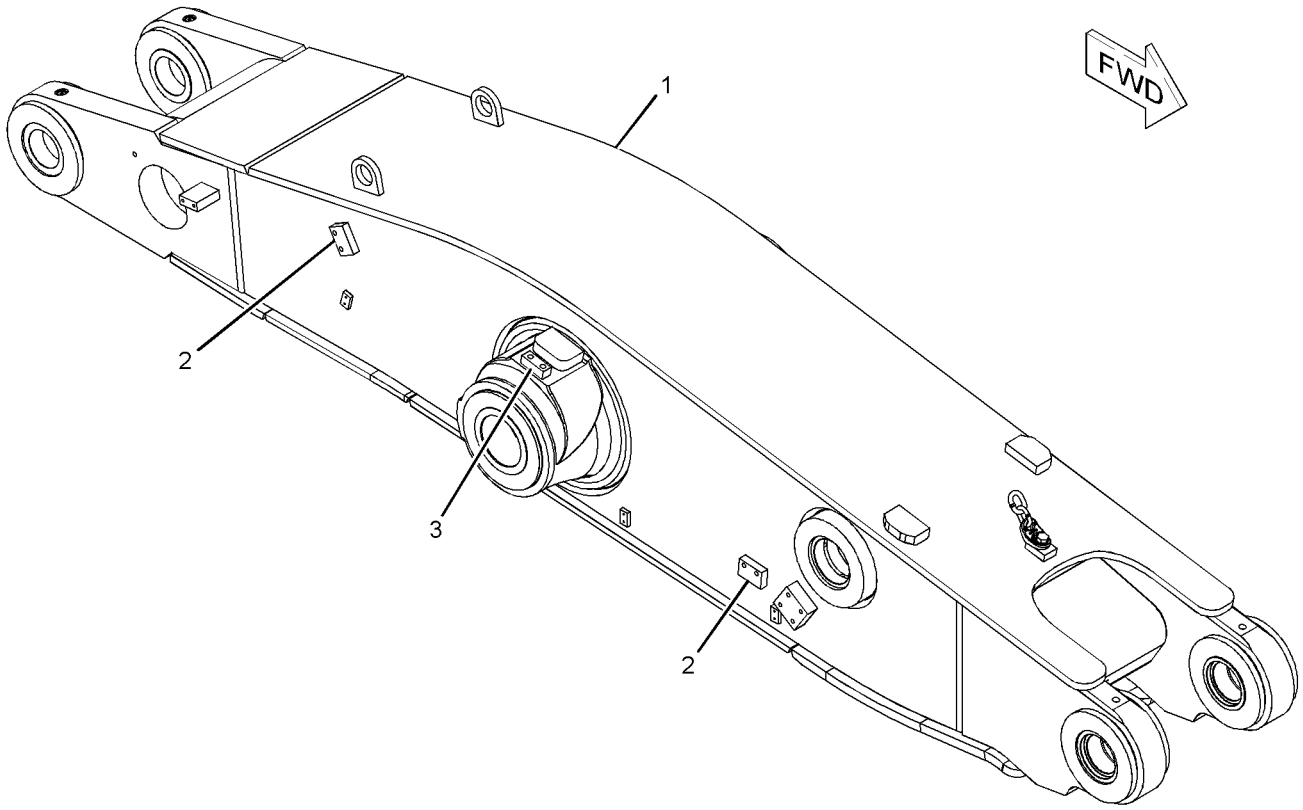

GRAPHIC #1 **<END>** g01111106

IMPLEMENTS

255-8204 BOOM GP-LOADER

S/N: BXY1-UP
3.88-M
PART OF 255-0041, 298-6963 LIFT AR
AN ATTACHMENT

SMCS-6107, 6117 **i02224930**

NOTE	REF NO	GRAPHIC REF	PART NUMBER	QTY	PART NAME 1 2 3 4 5 6 (PRODUCT LEVEL)	SEE PAGE
Y	1	1	**248-6340**	1	BOOM & BEARING AS	1663
	2	1	**103-5350**	4	PLATE	
	3	1	**6C-6739**	2	BLOCK	

Y-SEPARATE ILLUSTRATION

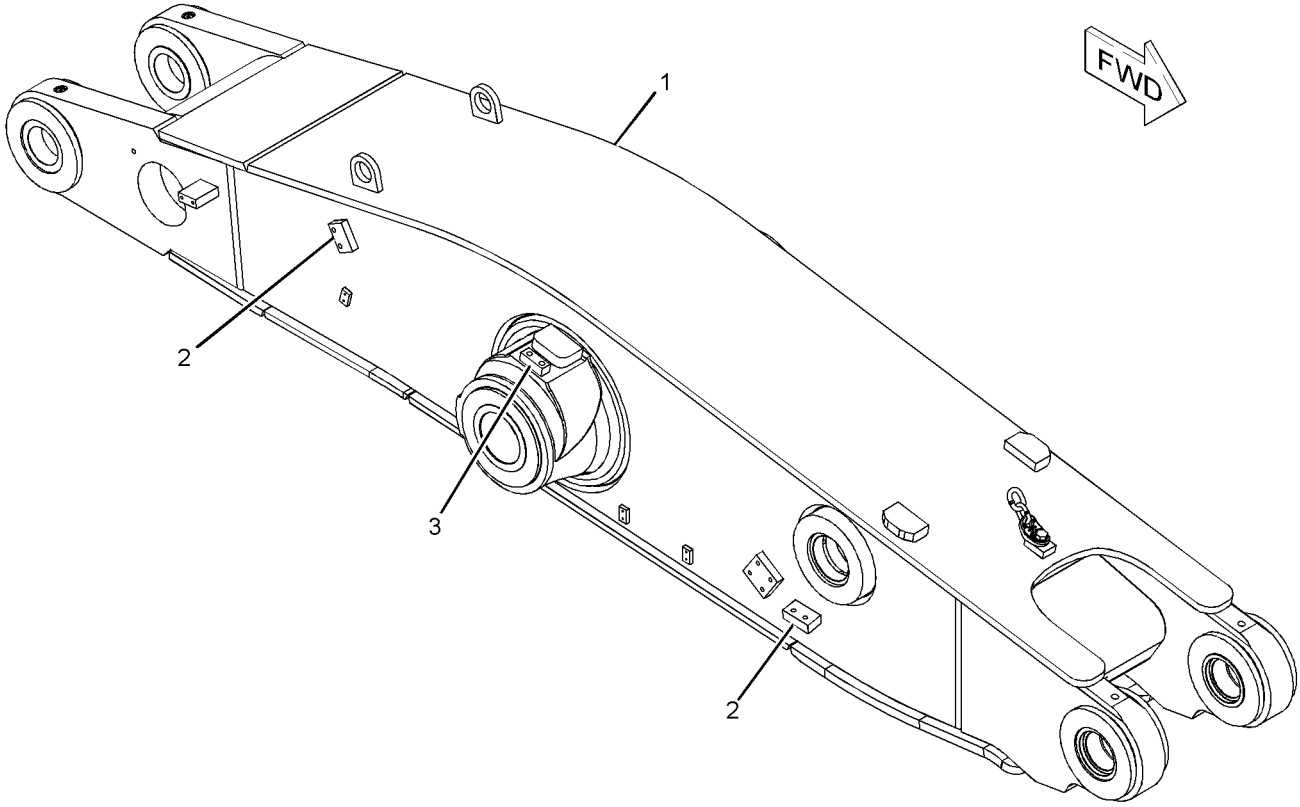

GRAPHIC #1 **<END>** g01129792

IMPLEMENTS

114-5196 CONTROL GP-BUCKET

S/N: BXY1-UP

PART OF 255-0042, 255-0043, 298-6964, 298-6965 LIFT AR

AN ATTACHMENT

SMCS-6107 **i02188668**

NOTE	REF NO	GRAPHIC REF	PART NUMBER	QTY	PART NAME 1 2 3 4 5 6 (PRODUCT LEVEL)	SEE PAGE
Y	1	1	*197-0679*	2	LINKAGE GP-BUCKET	1687

Y-SEPARATE ILLUSTRATION

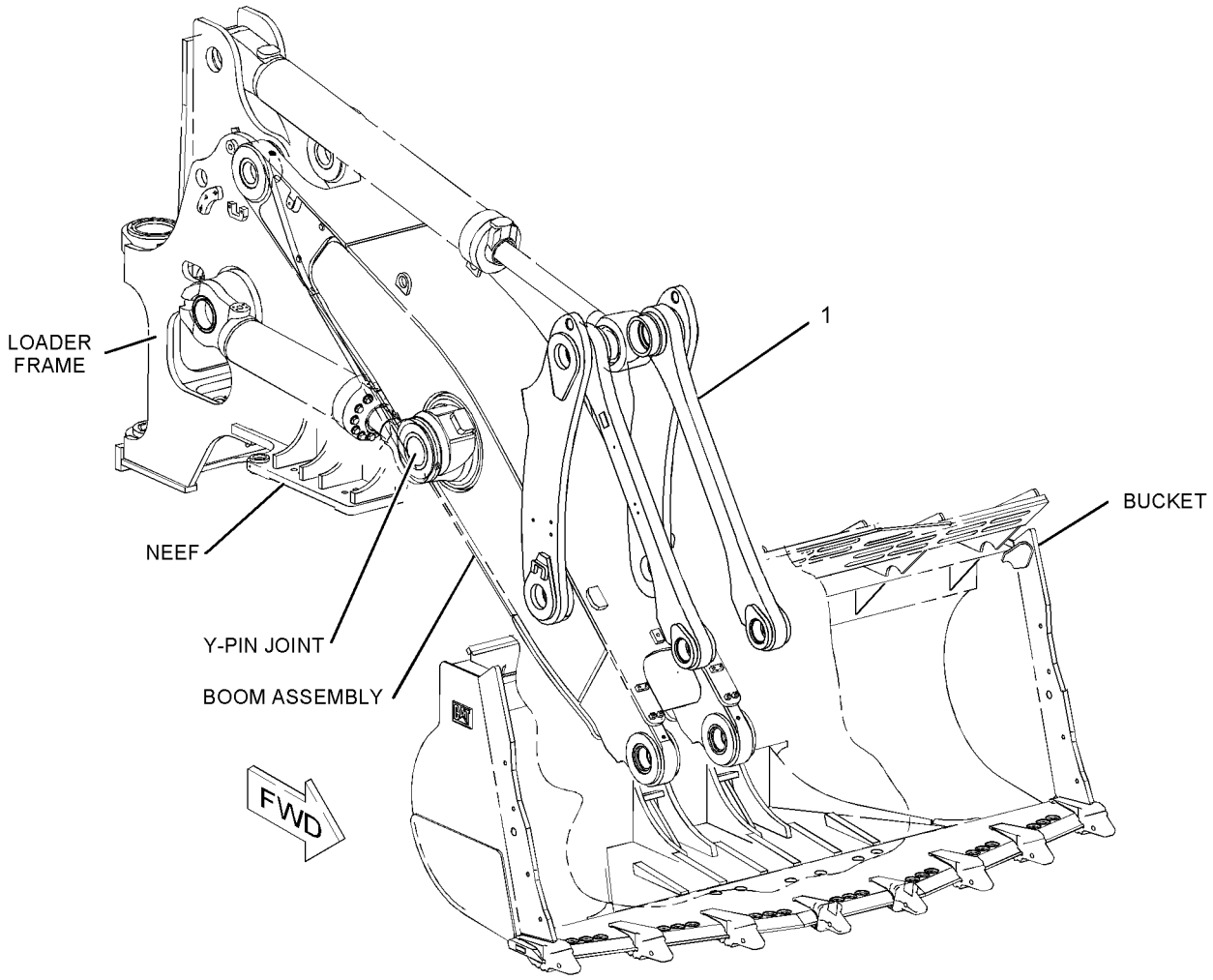

GRAPHIC #1 **<END>** g01130820

248-6350 CONTROL GP-BUCKET

S/N: BXY1-UP

PART OF 255-0040, 255-0041, 298-6962, 298-6963 LIFT AR

AN ATTACHMENT

SMCS-6107 **i02338409**

NOTE	REF NO	GRAPHIC REF	PART NUMBER	QTY	PART NAME 1 2 3 4 5 6 (PRODUCT LEVEL)	SEE PAGE
	1	1	**248-6351**	1	LINK AS (LH)	
		1	**9U-0585**	2	RETAINER	
	2	1	**248-6352**	1	LINK AS (RH)	
	3	1	**248-6354**	1	LINK & BEARING AS (RH)	
	4	1	**248-6357**	1	LINK & BEARING AS (LH)	
					(EACH LINK AND BEARING INCLUDES)	
	4A	1	**111-9758**	1	PLATE	
	4B	1	**152-3735**	1	BEARING	
	4C	1	**152-3740**	1	BEARING	

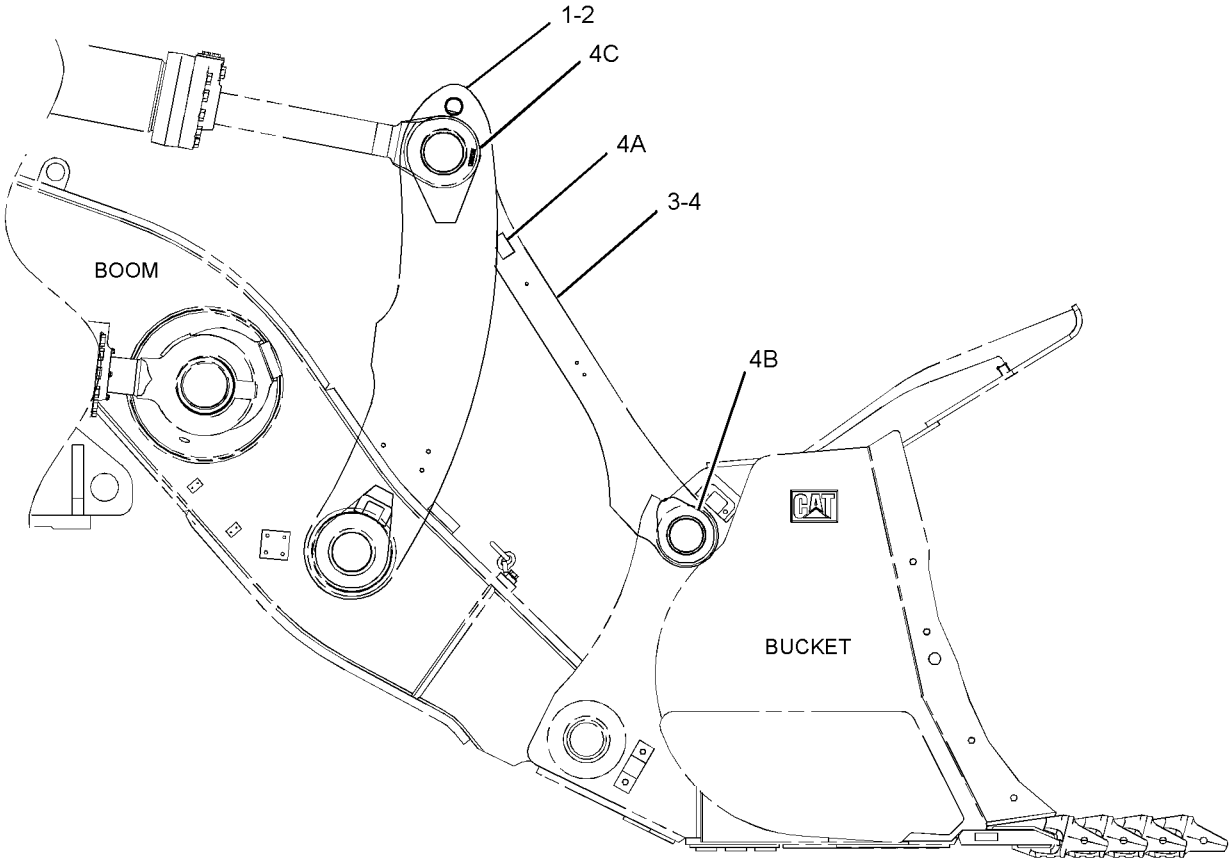

GRAPHIC #1 **<END>** g01167209

IMPLEMENTS

259-2425 CONTROL GP-BUCKET

S/N: BXY1-1899

PART OF 259-2405, 259-2436 LUBRICATION AR-AUTOMATIC

AN ATTACHMENT

SMCS-6107 **i02500101**

NOTE	REF NO	GRAPHIC REF	PART NUMBER	QTY	PART NAME 1 2 3 4 5 6 (PRODUCT LEVEL)	SEE PAGE
	1	1	**259-2426**	1	LINK AS (LH)	
		1	**9C-6809**	1	BLOCK (M10X1.5-THD)	
M		1	**107-2344**	1	BOSS (M10X1.5X60-MM)	
		1	**248-6351**	1	LINK AS (LH)	
	2	1	**259-2427**	1	LINK AS (RH)	
M		1	**8T-3851**	1	BOSS-WELD (M10X1.5X17.5-MM)	
M		1	**9R-2821**	1	BOSS (M10X1.5X15-MM)	
		1	**9C-6809**	1	BLOCK (M10X1.5-THD)	
		1	**248-6352**	1	LINK AS (RH)	
	3	1	**259-2428**	1	LINK & BEARING AS (RH)	
M		1	**9R-2821**	1	BOSS (M10X1.5X15-MM)	
		1	**248-6354**	1	LINK & BEARING AS (RH)	
	3A	1	**152-3735**	1	BEARING	
	3B	1	**152-3740**	1	BEARING	
	4	1	**259-2429**	1	LINK & BEARING AS (LH)	
M		1	**9R-2821**	1	BOSS (M10X1.5X15-MM)	
		1	**248-6357**	1	LINK & BEARING AS (LH)	
	4A	1	**152-3735**	1	BEARING	
	4B	1	**152-3740**	1	BEARING	

M-METRIC PART

259-2425 **CONTROL GP-BUCKET** *(contd.)* **i02500101**

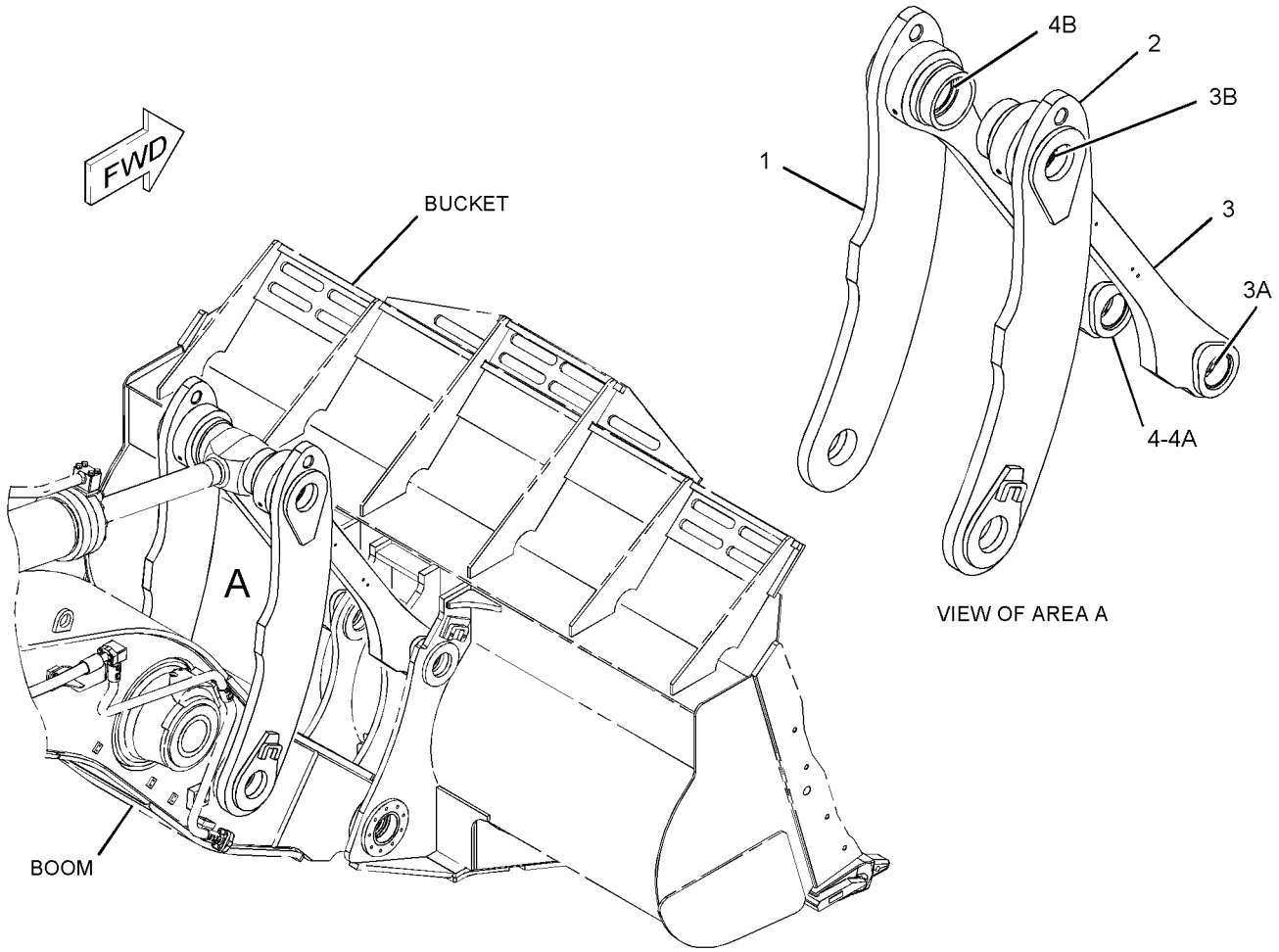

GRAPHIC #1 **<END>** g01128577

IMPLEMENTS

293-7309 CONTROL GP-BUCKET

S/N: BXY1900-UP

PART OF 293-7303, 293-7304, 349-4485 LUBRICATION AR-AUTOMATIC

AN ATTACHMENT

SMCS-6107 **i02675894**

NOTE	REF NO	GRAPHIC REF	PART NUMBER	QTY	PART NAME 1 2 3 4 5 6 (PRODUCT LEVEL)	SEE PAGE
	1	1	**259-2426**	1	LINK AS (LH)	
	1A	1	**9C-6809**	1	BLOCK (M10X1.5-THD)	
M	1B	1	**107-2344**	1	BOSS (M10X1.5X60-MM)	
	2	1	**259-2427**	1	LINK AS (RH)	
M	2A	1	**8T-3851**	1	BOSS-WELD (M10X1.5X17.5-MM)	
	2B	1	**9C-6809**	1	BLOCK (M10X1.5-THD)	
	3	1	**299-4793**	1	LINK & BEARING AS (RH)	
	3A	1	**152-3740**	1	BEARING	
	3B	1	**152-3735**	1	BEARING	
	4	1	**299-4794**	1	LINK & BEARING AS (LH)	
	4A	1	**152-3740**	1	BEARING	
	4B	1	**152-3735**	1	BEARING	

M-METRIC PART

293-7309 **CONTROL GP-BUCKET** *(contd.)* **i02675894**

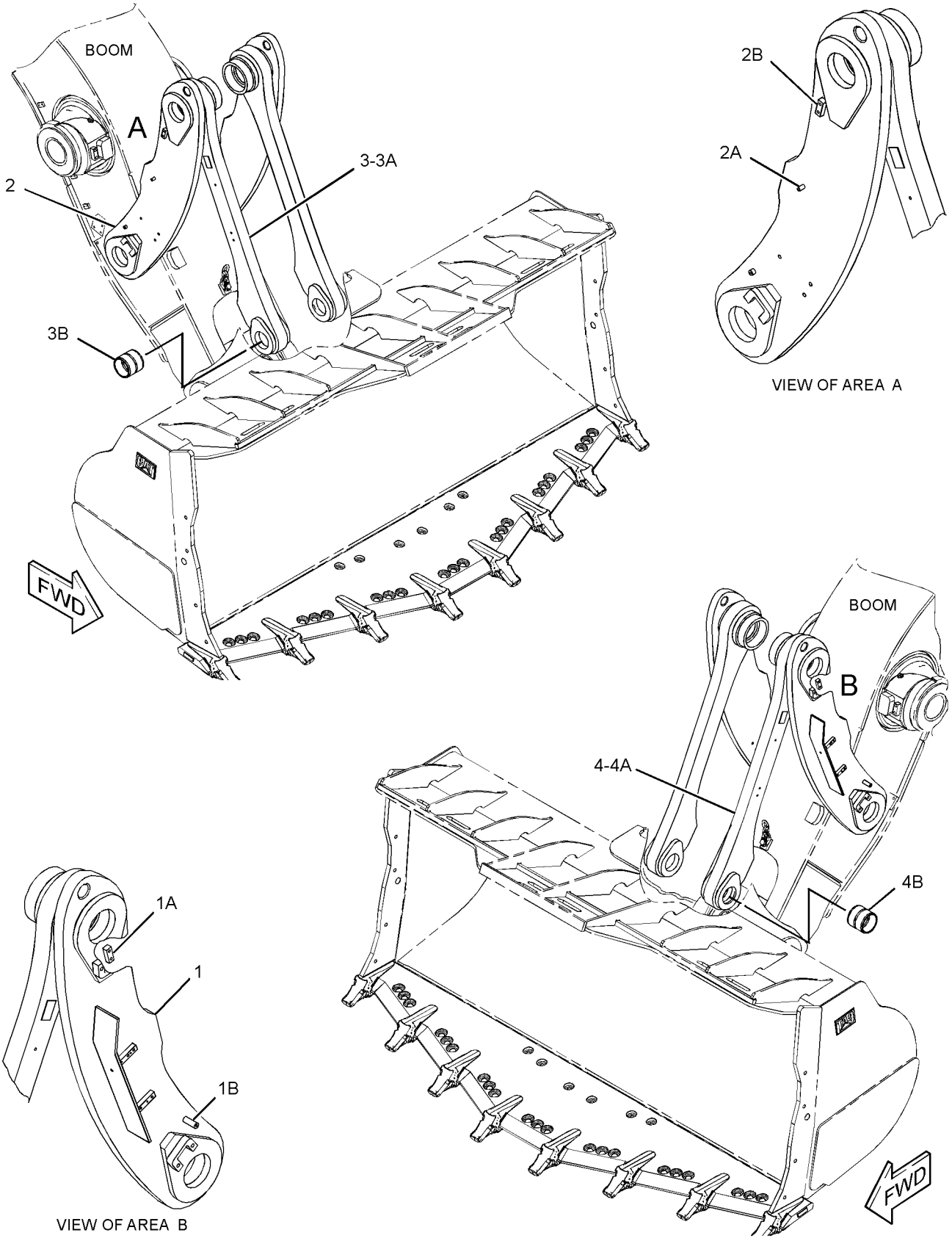

GRAPHIC #1 **<END>** g01368130

IMPLEMENTS

293-7310 CONTROL GP-BUCKET

S/N: BXY1900-UP

PART OF 293-7305, 293-7306, 349-4484 LUBRICATION AR-AUTOMATIC AN ATTACHMENT

SMCS-6107 **i02675897**

NOTE	REF NO	GRAPHIC REF	PART NUMBER	QTY	PART NAME 1 2 3 4 5 6 (PRODUCT LEVEL)	SEE PAGE
	1	1	**189-7444**	1	LINK AS (RH)	
M	1A	1	**8T-3851**	1	BOSS-WELD (M10X1.5X17.5-MM)	
M	1B	1	**9R-2821**	1	BOSS (M10X1.5X15-MM)	
	2	1	**189-7445**	1	LINK AS (LH)	
M	2A	1	**107-2344**	1	BOSS (M10X1.5X60-MM)	
	3	1	**299-4797**	1	LINK & BEARING AS (RH)	
	3A	1	**111-9758**	1	PLATE	
	3B	1	**152-3735**	1	BEARING	
	3C	1	**152-3740**	1	BEARING	
	4	1	**299-4798**	1	LINK & BEARING AS (LH)	
	4A	1	**111-9758**	1	PLATE	
	4B	1	**152-3735**	1	BEARING	
	4C	1	**152-3740**	1	BEARING	

M-METRIC PART

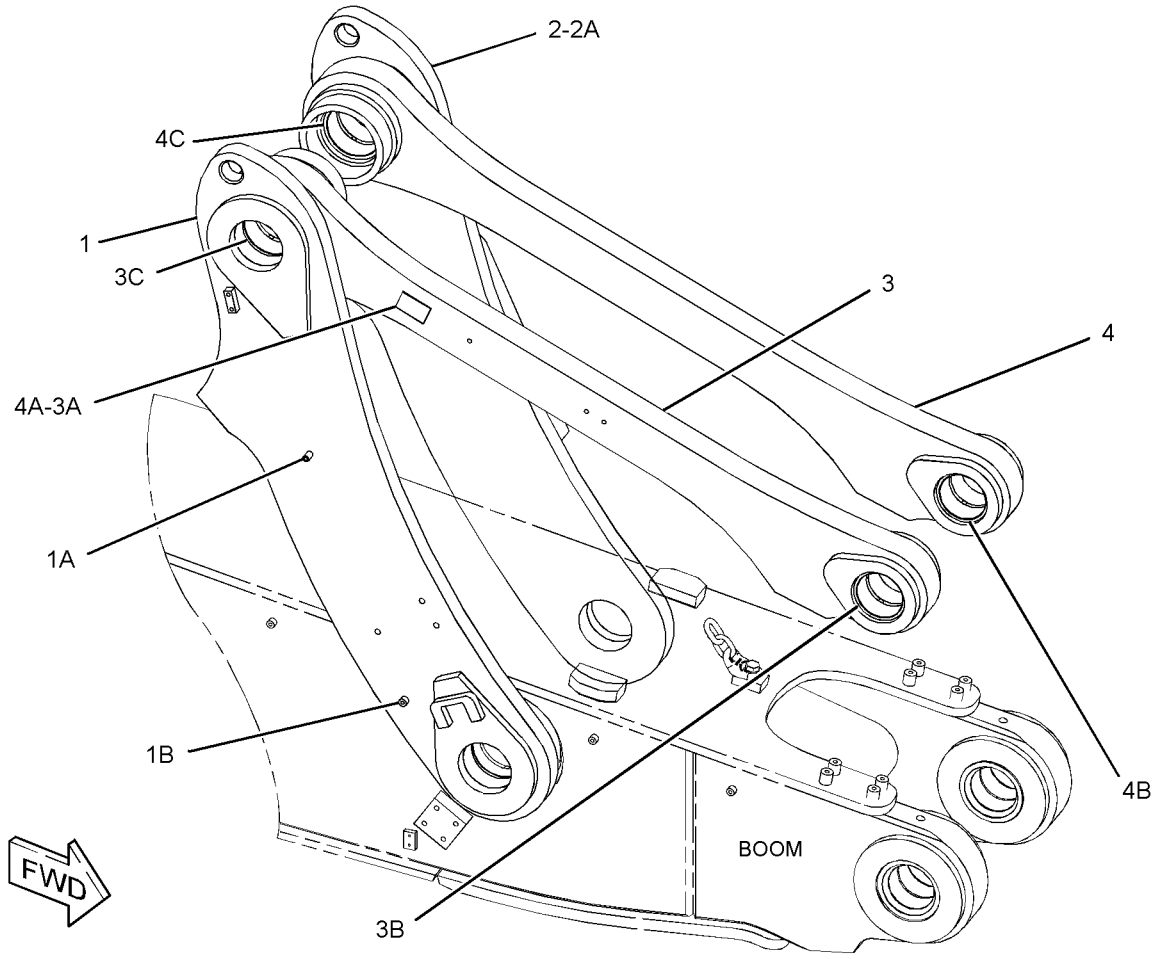

GRAPHIC #1 **<END>** g01346718

IMPLEMENTS

189-7589 HARDWARE GP-BOOM

S/N: BXY1-1899
PART OF 247-7034, 259-2437 LUBRICATION AR-AUTOMATIC
AN ATTACHMENT

SMCS-6501, 7553 **i02224588**

NOTE	REF NO	GRAPHIC REF	PART NUMBER	QTY	PART NAME 1 2 3 4 5 6 (PRODUCT LEVEL)	SEE PAGE
	1	1	**2R-1920**	1	BLOCK	
	2	1	*091-1735*	1	BLOCK	
	3	1	*153-4806*	1	BLOCK	
	4	1	*188-9657*	1	BLOCK	
	5	1	*225-2646*	4	BLOCK	
	6	1	*225-2647*	2	BLOCK	
M	7	1	**8T-3851**	9	BOSS-WELD (M10X1.5X17.5-MM)	

M-METRIC PART

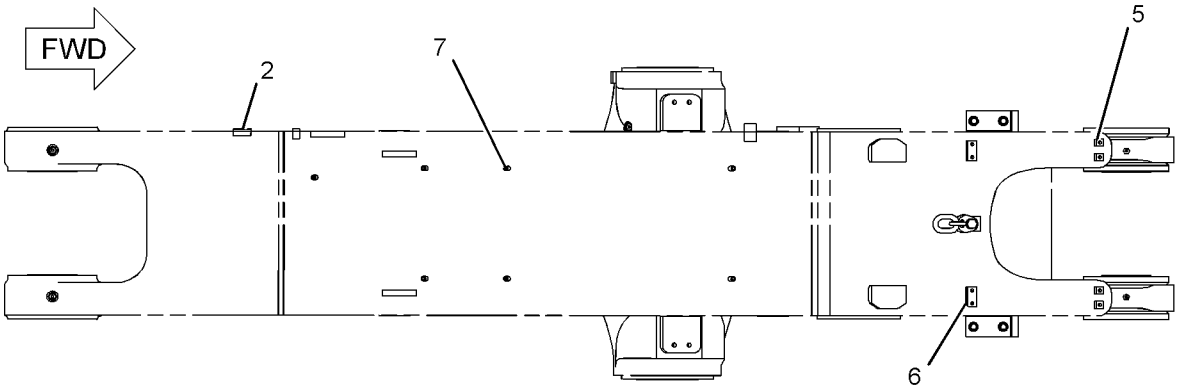

TOP VIEW

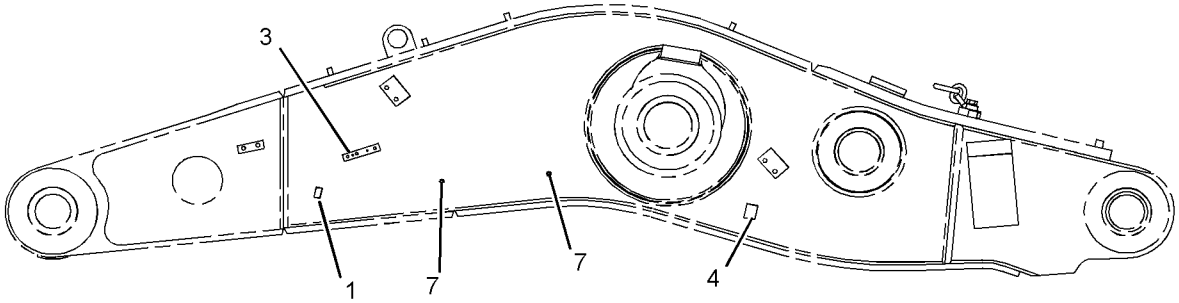

RIGHT SIDE VIEW

GRAPHIC #1 **<END>** g01122556

IMPLEMENTS

243-5885 HARDWARE GP-BOOM

S/N: BXY1-1899

PART OF 247-7033, 259-2435 LUBRICATION AR-AUTOMATIC

AN ATTACHMENT

SMCS-6501, 7553 **i02330986**

NOTE	REF NO	GRAPHIC REF	PART NUMBER	QTY	PART NAME 1 2 3 4 5 6 (PRODUCT LEVEL)	SEE PAGE
	1	1	**2R-1920**	1	BLOCK	
	2	1	*091-1735*	1	BLOCK	
	3	1	*153-4806*	1	BLOCK	
	4	1	*172-5307*	1	BLOCK	
	5	1	*188-9657*	1	BLOCK	
	6	1	*9R-4595*	10	BOSS	
	7	1	*225-2647*	2	BLOCK	
	8	1	*243-5937*	1	BLOCK	
M	9	1	**8T-3851**	2	BOSS-WELD (M10X1.5X17.5-MM)	

M-METRIC PART

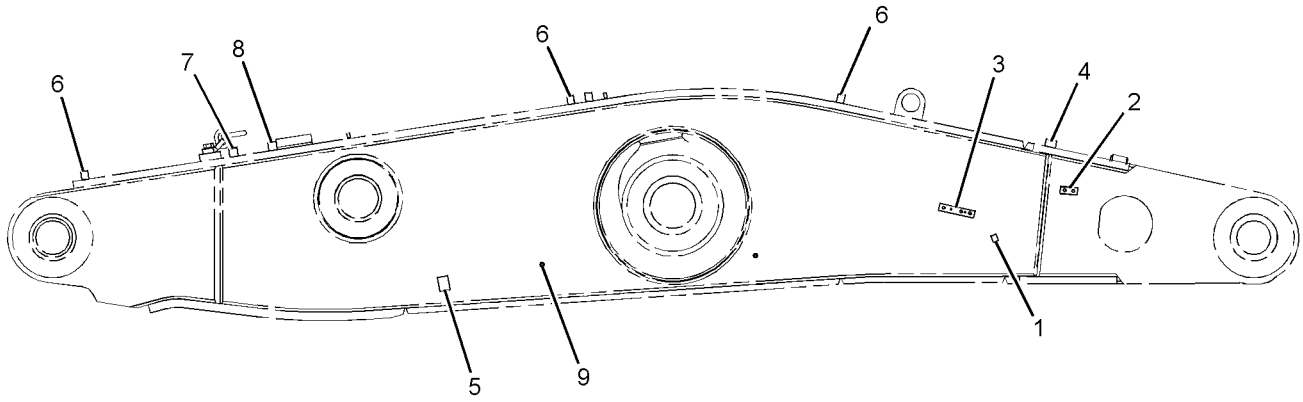

LEFT SIDE VIEW

GRAPHIC #1 **<END>** g01163537

259-2430 HARDWARE GP-BOOM

S/N: BXY1-1899

PART OF 259-2405, 259-2436 LUBRICATION AR-AUTOMATIC

AN ATTACHMENT

SMCS-6501, 7553 **i02225026**

NOTE	REF NO	GRAPHIC REF	PART NUMBER	QTY	PART NAME 1 2 3 4 5 6 (PRODUCT LEVEL)	SEE PAGE
	1	1	**2R-1920**	1	BLOCK	
	2	1	*091-1735*	1	BLOCK	
	3	1	*153-4806*	1	BLOCK	
	4	1	*188-9657*	1	BLOCK	
	5	1	*225-2647*	2	BLOCK	
	6	1	*243-5937*	1	BLOCK	
M	7	1	**8T-3851**	2	BOSS-WELD (M10X1.5X17.5-MM)	
M	8	1	**9R-2640**	1	BOSS (M12X1.75X25-MM)	
	9	1	*9R-4595*	12	BOSS	

M-METRIC PART

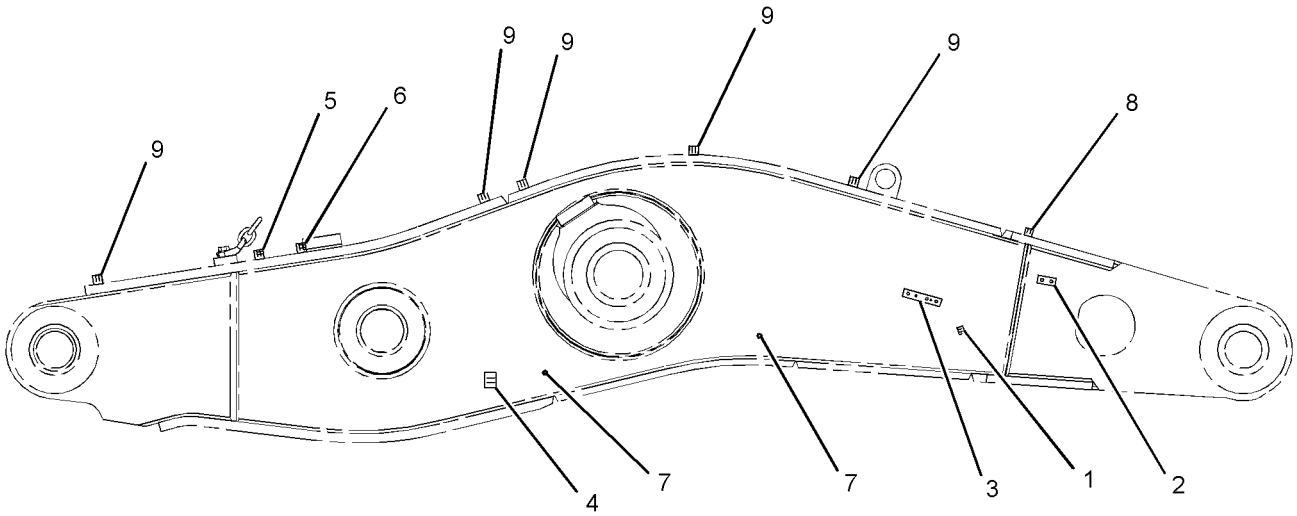

LEFT SIDE VIEW

GRAPHIC #1 **<END>** g01127979

IMPLEMENTS

285-7281 HARDWARE GP-BOOM

S/N: BXY1900-UP

PART OF 293-7303, 293-7304, 349-4485 LUBRICATION AR-AUTOMATIC AN ATTACHMENT

SMCS-6501, 7553 **i02675720**

NOTE	REF NO	GRAPHIC REF	PART NUMBER	QTY	PART NAME 1 2 3 4 5 6 (PRODUCT LEVEL)	SEE PAGE
	1	1	**2R-1920**	1	BLOCK	
	2	1	*091-1735*	1	BLOCK	
	3	1	*153-4806*	1	BLOCK	
	4	1	*188-9657*	1	BLOCK	
M	5	1	**8T-3851**	2	BOSS-WELD (M10X1.5X17.5-MM)	
M	6	1	**9R-2821**	8	BOSS (M10X1.5X15-MM)	
	7	1	**9R-4595**	8	BOSS	

M-METRIC PART

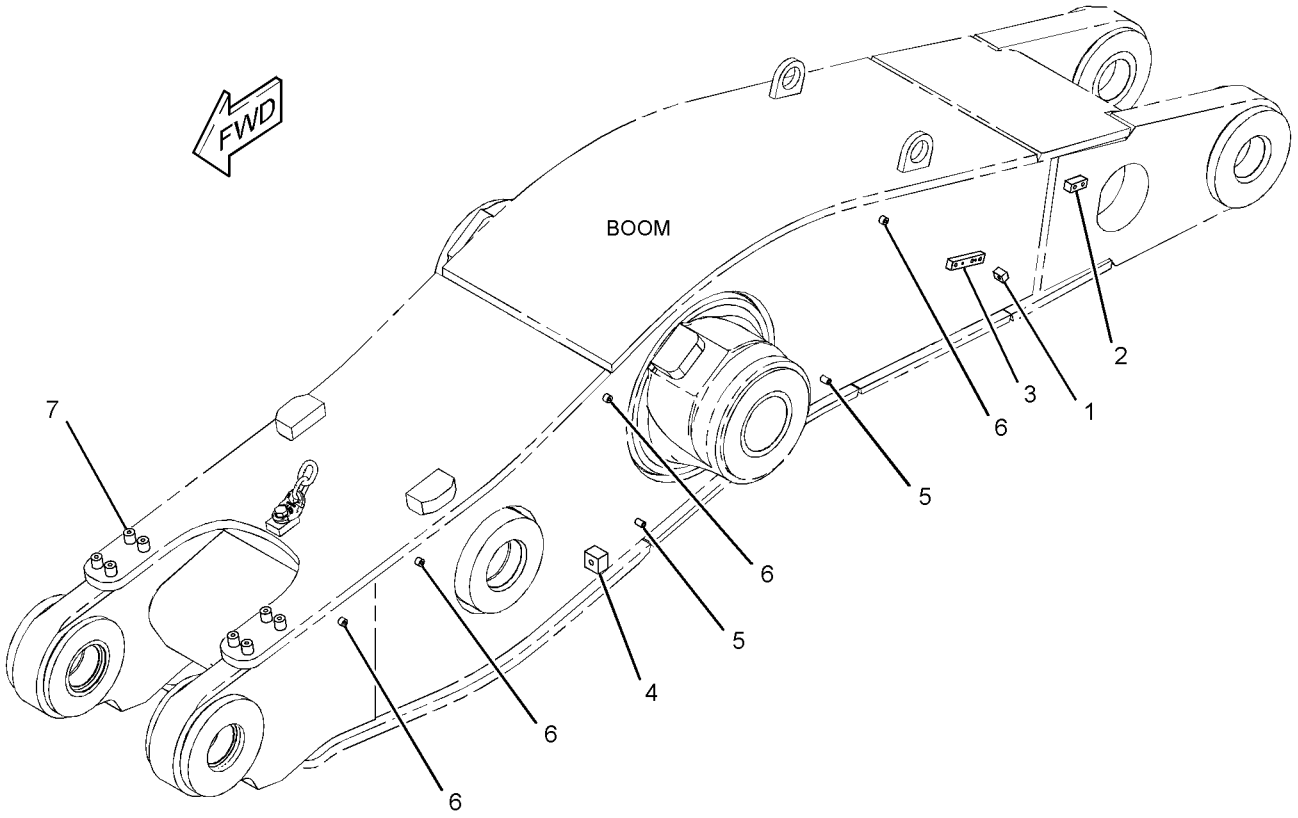

GRAPHIC #1 **<END>** g01367855

285-7282 HARDWARE GP-BOOM

S/N: BXY1900-UP

PART OF 293-7305, 293-7306, 349-4484 LUBRICATION AR-AUTOMATIC AN ATTACHMENT

SMCS-6501, 7553 **i02675728**

NOTE	REF NO	GRAPHIC REF	PART NUMBER	QTY	PART NAME 1 2 3 4 5 6 (PRODUCT LEVEL)	SEE PAGE
	1	1	**2R-1920**	1	BLOCK	
	2	1	*091-1735*	1	BLOCK	
	3	1	*153-4806*	1	BLOCK	
	4	1	*188-9657*	1	BLOCK	
M	5	1	**8T-3851**	2	BOSS-WELD (M10X1.5X17.5-MM)	
M	6	1	**9R-2821**	8	BOSS (M10X1.5X15-MM)	
	7	1	**9R-4595**	8	BOSS	

M-METRIC PART

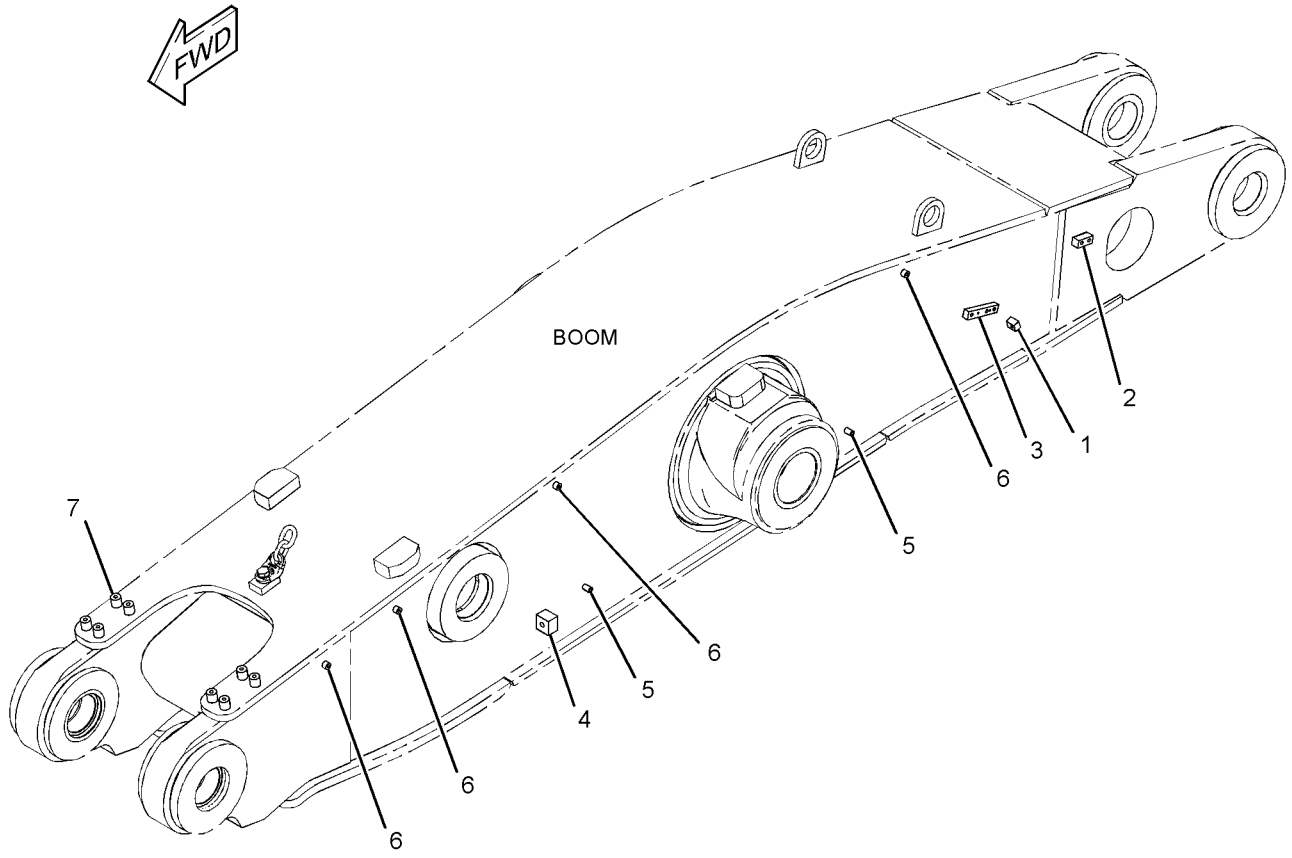

GRAPHIC #1 **<END>** g01367824

IMPLEMENTS

285-7283 HARDWARE GP-BOOM

S/N: BXY1900-UP

PART OF 293-7307, 293-7308, 349-4486 LUBRICATION AR-AUTOMATIC AN ATTACHMENT

SMCS-6501, 7553 **i02675730**

NOTE	REF NO	GRAPHIC REF	PART NUMBER	QTY	PART NAME 1 2 3 4 5 6 (PRODUCT LEVEL)	SEE PAGE
	1	1	**2R-1920**	1	BLOCK	
	2	1	*091-1735*	1	BLOCK	
	3	1	*153-4806*	1	BLOCK	
	4	1	*188-9657*	1	BLOCK	
M	5	1	**8T-3851**	2	BOSS-WELD (M10X1.5X17.5-MM)	
M	6	1	**9R-2821**	11	BOSS (M10X1.5X15-MM)	
	7	1	**9R-4595**	8	BOSS	

M-METRIC PART

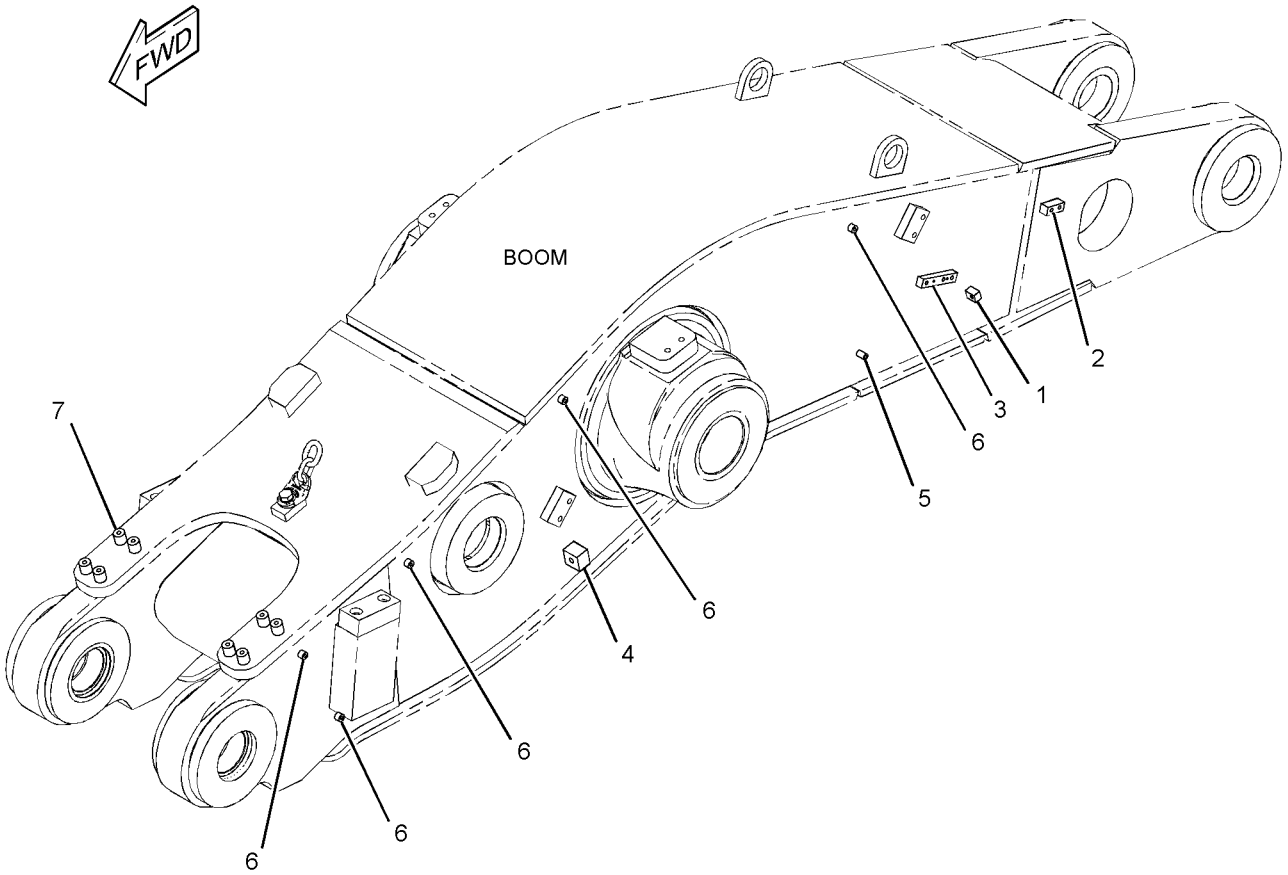

GRAPHIC #1 **<END>** g01367817

IMPLEMENTS

255-0040 LIFT AR—STANDARD LIFT MACHINES, 2-VALVE

S/N: BXY1-UP
3.88-M
AN ATTACHMENT

SMCS-6000 **i03083365**

NOTE	PART NUMBER	QTY	PART NAME 1 2 3 4 5 6 (PRODUCT LEVEL)	SEE PAGE
Y	**248-6340**	1	BOOM & BEARING AS	1663
Y	*255-6961*	1	BUMPER GP-REAR	891
Y	*248-6350*	1	CONTROL GP-BUCKET	1667
Y	*228-0918*	1	CONTROL GP-ELECTROHYDRAULIC (2-FUNCTION)	1713
Y	*114-5192*	1	CONTROL GP-LIFT & TILT POS	297
Y	*246-2322*	1	LINES GP-TILT CYLINDER	1519
Y	*246-6921*	1	LINES GP-TILT CYLINDER (CYLINDER MOUNTED, STD LIFT)	1523
Y	*132-6133*	1	VALVE & MTG GP-MAIN CONTROL (2-FUNCTION)	1572
Y	*255-7139*	1	WIRING GP-SENSOR (LIFT, TILT POSITION)	659
	149-0606	1	PLUG AS	
	155-2265	1	KIT-CONNECTING PLUG (8-PIN)	
			(INCLUDES PLUG AS, WEDGE & INTERFACE SEAL)	
	8T-8737	5	PLUG-SEAL	
	186-3736	1	SOCKET-CONNECTOR (16-GA TO 18-GA)	
D	**5P-5677**		WIRE (18-GA, BLACK) (0.4-M)	
E	**125-7874**		TUBE-HEAT SHRINK (5.72-MM DIA) (5-CM)	
D	**5P-5677**		WIRE (18-GA, BLACK) (1-M)	

D-ORDER BY THE METER
E-ORDER BY THE CENTIMETER
Y-SEPARATE ILLUSTRATION

<END>

255-0041 LIFT AR—STANDARD LIFT MACHINES, 3-VALVE

S/N: BXY1-UP
3.88-M
CANNOT BE USED WITH 255-0040—PAGE 1679, 255-0042—PAGE 1680, 255-0043—PAGE 1681
AN ATTACHMENT

SMCS-6000 **i02388188**

NOTE	PART NUMBER	QTY	PART NAME 1 2 3 4 5 6 (PRODUCT LEVEL)	SEE PAGE
Y	**255-8204**	1	BOOM GP-LOADER (3.88-M)	1665
Y	*255-6961*	1	BUMPER GP-REAR	891
Y	*248-6350*	1	CONTROL GP-BUCKET	1667
Y	*227-0966*	1	CONTROL GP-ELECTROHYDRAULIC (3-FUNCTION)	1709
Y	*114-5192*	1	CONTROL GP-LIFT & TILT POS	297
Y	*246-6923*	1	LINES GP-FRONT	1449
Y	*246-2323*	1	LINES GP-TILT CYLINDER	1521
Y	*246-6921*	1	LINES GP-TILT CYLINDER (CYLINDER MOUNTED, STD LIFT)	1523
Y	*201-0218*	1	VALVE & MTG GP-MAIN CONTROL (3-FUNCTION)	1575
Y	*255-7139*	1	WIRING GP-SENSOR (LIFT, TILT POSITION)	659
	149-0606	1	PLUG AS	
	155-2265	1	KIT-CONNECTING PLUG (8-PIN)	
			(INCLUDES PLUG AS AND WEDGE)	
D	**5P-5677**		WIRE (18-GA, BLACK) (1-M)	
	186-3736	1	SOCKET-CONNECTOR (16-GA TO 18-GA)	
	8T-8737	5	PLUG-SEAL	
E	**125-7874**		TUBE-HEAT SHRINK (5.72-MM DIA) (5-CM)	

D-ORDER BY THE METER
E-ORDER BY THE CENTIMETER
Y-SEPARATE ILLUSTRATION

<END>

255-0042 LIFT AR—HIGH LIFT MACHINES, 2-VALVE

S/N: BXY1-UP
4.25-M
CANNOT BE USED WITH 255-0040—PAGE 1679, 255-0041—PAGE 1680, 255-0043—PAGE 1681
AN ATTACHMENT

SMCS-6000 **i02259863**

NOTE	PART NUMBER	QTY	PART NAME 1 2 3 4 5 6 (PRODUCT LEVEL)	SEE PAGE
Y	**231-8177**	1	BOOM & BEARING AS	1662
Y	*260-1400*	1	BUMPER GP-REAR	893
Y	*114-5196*	1	CONTROL GP-BUCKET	1666
Y	*228-0918*	1	CONTROL GP-ELECTROHYDRAULIC (2-FUNCTION)	1713
Y	*114-5192*	1	CONTROL GP-LIFT & TILT POS	297
Y	*246-2322*	1	LINES GP-TILT CYLINDER	1519
Y	*156-5519*	1	LINES GP-TILT CYLINDER (CYLINDER MOUNTED)	1515
Y	*132-6133*	1	VALVE & MTG GP-MAIN CONTROL (2-FUNCTION)	1572
Y	*261-8025*	1	WIRING GP-SENSOR (LIFT, TILT POSITION) (HIGH LIFT MACHINES)	660
	117-1903	1	PLUG AS	
	155-2265	1	KIT-CONNECTING PLUG (8-PIN)	
			(INCLUDES PLUG AS AND WEDGE)	
	8T-8737	3	PLUG-SEAL	

Y-SEPARATE ILLUSTRATION

<END>

255-0043 LIFT AR—HIGH LIFT MACHINES, 3-VALVE

S/N: BXY1-UP

4.25-M

CANNOT BE USED WITH 255-0041—PAGE 1680, 255-0042—PAGE 1680, 255-0040—PAGE 1679

AN ATTACHMENT

SMCS-6000 **i02259864**

NOTE	PART NUMBER	QTY	PART NAME 1 2 3 4 5 6 (PRODUCT LEVEL)	SEE PAGE
Y	**201-1049**	1	BOOM GP-LOADER (4.25-M)	1664
Y	*260-1400*	1	BUMPER GP-REAR	893
Y	*114-5196*	1	CONTROL GP-BUCKET	1666
Y	*227-0966*	1	CONTROL GP-ELECTROHYDRAULIC (3-FUNCTION)	1709
Y	*114-5192*	1	CONTROL GP-LIFT & TILT POS	297
Y	*201-0377*	1	LINES GP-FRONT	1446
Y	*246-2323*	1	LINES GP-TILT CYLINDER	1521
Y	*156-5519*	1	LINES GP-TILT CYLINDER (CYLINDER MOUNTED)	1515
Y	*201-0218*	1	VALVE & MTG GP-MAIN CONTROL (3-FUNCTION)	1575
Y	*261-8025*	1	WIRING GP-SENSOR (LIFT, TILT POSITION) (HIGH LIFT MACHINES)	660
	117-1903	1	PLUG AS	
	155-2265	1	KIT-CONNECTING PLUG (8-PIN)	
			(INCLUDES PLUG AS AND WEDGE)	
	8T-8737	3	PLUG-SEAL	

Y-SEPARATE ILLUSTRATION

<END>

298-6962 LIFT AR—3.88-M, STD LIFT, 2-VALVE

S/N: BXY2733-UP

CANNOT BE USED WITH 298-6963—PAGE 1683, 298-6964—PAGE 1684, 298-6965—PAGE 1685

AN ATTACHMENT

SMCS-6000 **i03760752**

NOTE	PART NUMBER	QTY	PART NAME 1 2 3 4 5 6 (PRODUCT LEVEL)	SEE PAGE
Y	**248-6340**	1	BOOM & BEARING AS	1663
Y	*255-6961*	1	BUMPER GP-REAR	891
Y	*248-6350*	1	CONTROL GP-BUCKET	1667
Y	*228-0918*	1	CONTROL GP-ELECTROHYDRAULIC (2-FUNCTION)	1713
			S/N: BXY2733-3999	
Y	*326-3191*	1	CONTROL GP-ELECTROHYDRAULIC (2-FUNCTION)	1716
			S/N: BXY4000-UP	
Y	*114-5192*	1	CONTROL GP-LIFT & TILT POS	297
Y	*296-8265*	1	LINES GP-TILT CYLINDER	1527
Y	*296-8271*	1	LINES GP-TILT CYLINDER	1531
Y	*298-2500*	1	VALVE & MTG GP-MAIN CONTROL	1578
			S/N: BXY2733-3999	
Y	*315-8815*	1	VALVE & MTG GP-MAIN CONTROL	1590
			S/N: BXY4000-UP	
Y	*255-7139*	1	WIRING GP-SENSOR (LIFT, TILT POSITION)	659
	149-0606	1	PLUG AS	
	155-2265	1	KIT-CONNECTING PLUG (8-PIN)	
			(INCLUDES PLUG AS, WEDGE & INTERFACE SEAL)	
	8T-8737	5	PLUG-SEAL	
	8T-8730	3	SOCKET-CONNECTOR (16-GA TO 18-GA)	
E	**125-7874**		TUBE-HEAT SHRINK (5.72-MM DIA) (5-CM)	
	155-2259	1	WEDGE-PLUG LOCK (8-PIN)	
D	**5P-5677**		WIRE (18-GA, BLACK) (0.4-M)	

D-ORDER BY THE METER
E-ORDER BY THE CENTIMETER
Y-SEPARATE ILLUSTRATION

<END>

IMPLEMENTS

298-6963 LIFT AR—3.88-M, STD LIFT, 3-VALVE

S/N: BXY2733-UP

CANNOT BE USED WITH 298-6962—PAGE 1682, 298-6964—PAGE 1684, 298-6965—PAGE 1685

AN ATTACHMENT

SMCS-6000 **i03760790**

NOTE	PART NUMBER	QTY	PART NAME 1 2 3 4 5 6 (PRODUCT LEVEL)	SEE PAGE
Y	**255-8204**	1	BOOM GP-LOADER (3.88-M)	1665
Y	*255-6961*	1	BUMPER GP-REAR	891
Y	*248-6350*	1	CONTROL GP-BUCKET	1667
Y	*227-0966*	1	CONTROL GP-ELECTROHYDRAULIC (3-FUNCTION)	1709
			S/N: BXY2733-3999	
Y	*326-3193*	1	CONTROL GP-ELECTROHYDRAULIC	1718
			S/N: BXY4000-UP	
Y	*114-5192*	1	CONTROL GP-LIFT & TILT POS	297
Y	*298-2502*	1	LINES GP-FRONT	1452
			S/N: BXY2733-3999	
Y	*315-8825*	1	LINES GP-FRONT	1458
			S/N: BXY4000-UP	
Y	*296-8265*	1	LINES GP-TILT CYLINDER	1527
Y	*296-8272*	1	LINES GP-TILT CYLINDER	1533
			S/N: BXY2733-3999	
Y	*315-8810*	1	LINES GP-TILT CYLINDER	1535
			S/N: BXY4000-UP	
Y	*298-2501*	1	VALVE & MTG GP-MAIN CONTROL	1586
			S/N: BXY2733-3999	
Y	*315-8830*	1	VALVE & MTG GP-MAIN CONTROL	1595
			S/N: BXY4000-UP	
Y	*255-7139*	1	WIRING GP-SENSOR (LIFT, TILT POSITION)	659
	149-0606	1	PLUG AS	
	155-2265	1	KIT-CONNECTING PLUG (8-PIN)	
			(INCLUDES PLUG AS, WEDGE & INTERFACE SEAL)	
	8T-8737	5	PLUG-SEAL	
	8T-8730	3	SOCKET-CONNECTOR (16-GA TO 18-GA)	
E	**125-7874**		TUBE-HEAT SHRINK (5.72-MM DIA) (5-CM)	
D	**5P-5677**		WIRE (18-GA, BLACK) (0.4-M)	

D-ORDER BY THE METER
E-ORDER BY THE CENTIMETER
Y-SEPARATE ILLUSTRATION

<END>

298-6964 LIFT AR–4.25-M, HIGH LIFT, 2-VALVE

S/N: BXY2733-UP

CANNOT BE USED WITH 298-6962–PAGE 1682, 298-6963–PAGE 1683, 298-6965–PAGE 1685

AN ATTACHMENT

SMCS-6000 **i03760791**

NOTE	PART NUMBER	QTY	PART NAME 1 2 3 4 5 6 (PRODUCT LEVEL)	SEE PAGE
Y	**231-8177**	1	BOOM & BEARING AS	1662
Y	*260-1400*	1	BUMPER GP-REAR	893
Y	*114-5196*	1	CONTROL GP-BUCKET	1666
Y	*228-0918*	1	CONTROL GP-ELECTROHYDRAULIC (2-FUNCTION)	1713
			S/N: BXY2733-3999	
Y	*326-3191*	1	CONTROL GP-ELECTROHYDRAULIC (2-FUNCTION)	1716
			S/N: BXY4000-UP	
Y	*114-5192*	1	CONTROL GP-LIFT & TILT POS	297
Y	*296-8268*	1	LINES GP-TILT CYLINDER	1529
Y	*296-8271*	1	LINES GP-TILT CYLINDER	1531
Y	*298-2500*	1	VALVE & MTG GP-MAIN CONTROL	1578
			S/N: BXY2733-3999	
Y	*315-8815*	1	VALVE & MTG GP-MAIN CONTROL	1590
			S/N: BXY4000-UP	
Y	*261-8025*	1	WIRING GP-SENSOR (LIFT, TILT POSITION)	660
	117-1903	1	PLUG AS	
	155-2265	1	KIT-CONNECTING PLUG (8-PIN)	
			(INCLUDES PLUG AS, WEDGE & INTERFACE SEAL)	
	8T-8737	3	PLUG-SEAL	
	8T-8730	5	SOCKET-CONNECTOR (16-GA TO 18-GA)	
D	**5P-5677**		WIRE (18-GA, BLACK) (0.5-M)	

D-ORDER BY THE METER
Y-SEPARATE ILLUSTRATION

<END>

IMPLEMENTS

298-6965 LIFT AR—4.25-M, HIGH LIFT, 3-VALVE

S/N: BXY2733-UP

CANNOT BE USED WITH 298-6962—PAGE 1682, 298-6963—PAGE 1683, 298-6964—PAGE 1684

AN ATTACHMENT

SMCS-6000 **i03790434**

NOTE	PART NUMBER	QTY	PART NAME 1 2 3 4 5 6 (PRODUCT LEVEL)	SEE PAGE
Y	**201-1049**	1	BOOM GP-LOADER (4.25-M)	1664
Y	*260-1400*	1	BUMPER GP-REAR	893
Y	*114-5196*	1	CONTROL GP-BUCKET	1666
Y	*326-3193*	1	CONTROL GP-ELECTROHYDRAULIC	1718
			S/N: BXY4000-UP	
Y	*227-0966*	1	CONTROL GP-ELECTROHYDRAULIC (3-FUNCTION)	1709
			S/N: BXY2733-3999	
Y	*114-5192*	1	CONTROL GP-LIFT & TILT POS	297
Y	*298-2503*	1	LINES GP-FRONT	1455
			S/N: BXY2733-3999	
Y	*315-8840*	1	LINES GP-FRONT	1460
			S/N: BXY4000-UP	
Y	*296-8268*	1	LINES GP-TILT CYLINDER	1529
Y	*296-8272*	1	LINES GP-TILT CYLINDER	1533
			S/N: BXY2733-3999	
Y	*315-8810*	1	LINES GP-TILT CYLINDER	1535
			S/N: BXY4000-UP	
Y	*298-2501*	1	VALVE & MTG GP-MAIN CONTROL	1586
			S/N: BXY2733-3999	
Y	*315-8830*	1	VALVE & MTG GP-MAIN CONTROL	1595
			S/N: BXY4000-UP	
Y	*261-8025*	1	WIRING GP-SENSOR (LIFT, TILT POSITION)	660
	117-1903	1	PLUG AS	
	155-2265	1	KIT-CONNECTING PLUG (8-PIN)	
			(INCLUDES PLUG AS, WEDGE & INTERFACE SEAL)	
	8T-8737	3	PLUG-SEAL	
	8T-8730	5	SOCKET-CONNECTOR (16-GA TO 18-GA)	
D	**5P-5677**		WIRE (18-GA, BLACK) (0.5-M)	

D-ORDER BY THE METER
Y-SEPARATE ILLUSTRATION

<END>

189-7638 LINKAGE GP-BUCKET

S/N: BXY1-1899

PART OF 247-7033, 259-2435 LUBRICATION AR-AUTOMATIC

AN ATTACHMENT

SMCS-6107, 6117 **i02344240**

NOTE	REF NO	GRAPHIC REF	PART NUMBER	QTY	PART NAME 1 2 3 4 5 6 (PRODUCT LEVEL)	SEE PAGE
	1	1	**189-7444**	1	LINK AS (RH)	
M		1	**8T-3851**	1	BOSS-WELD (M10X1.5X17.5-MM)	
	2	1	**189-7445**	1	LINK AS (LH)	
M		1	**107-2344**	1	BOSS (M10X1.5X60-MM)	
		1	**9U-0585**	2	RETAINER	
	3	1	**189-7474**	1	LINK & BEARING AS (RH)	
M		1	**8T-4967**	1	STUD-WELD (M10X1.5X23-MM OAL)	
		1	**152-3735**	1	BEARING	
		1	**152-3740**	1	BEARING	
M		1	**9R-2821**	1	BOSS (M10X1.5X15-MM)	
	4	1	**189-7475**	1	LINK & BEARING AS (LH)	
M		1	**8T-4967**	1	STUD-WELD (M10X1.5X23-MM OAL)	
		1	**152-3735**	1	BEARING	
		1	**152-3740**	1	BEARING	

M-METRIC PART

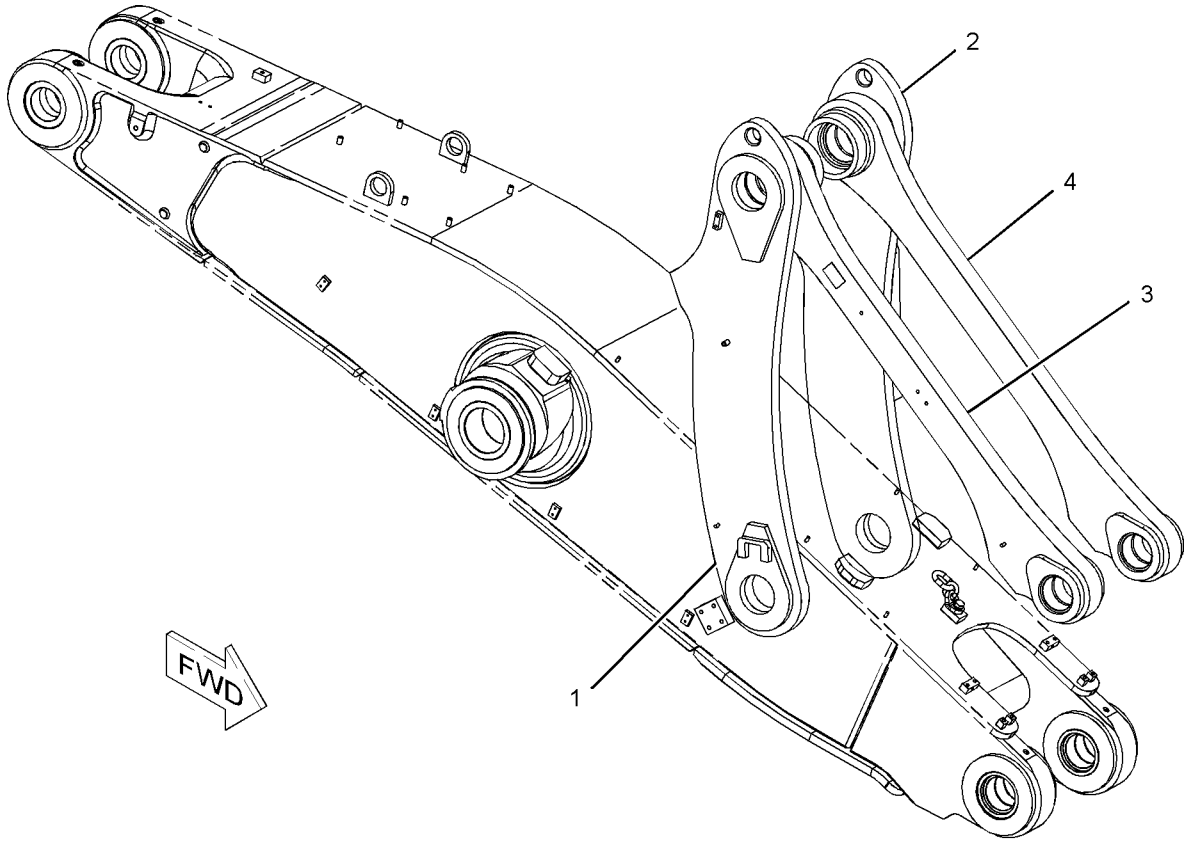

GRAPHIC #1 **<END>** g01015621

197-0679 LINKAGE GP-BUCKET

S/N: BXY1-UP
PART OF 114-5196 CONTROL GP-BUCKET
AN ATTACHMENT

SMCS-6107, 6117 **i02461905**

NOTE	REF NO	GRAPHIC REF	PART NUMBER	QTY	PART NAME 1 2 3 4 5 6 (PRODUCT LEVEL)	SEE PAGE
	1	1	**153-9839**	1	LINK AS-LH	
	1A	1	**9U-0585**	1	RETAINER	
	2	1	**153-9840**	1	LINK AS (RH)	
	2A	1	**9U-0585**	1	RETAINER	
	3	1	**153-9844**	1	LINK & BEARING AS (RH)	
	3A	1	**152-3735**	1	BEARING	
	3B	1	**152-3740**	1	BEARING	
	4	1	**154-6879**	1	LINK & BEARING AS (LH)	
	4A	1	**152-3735**	1	BEARING	
	4B	1	**152-3740**	1	BEARING	

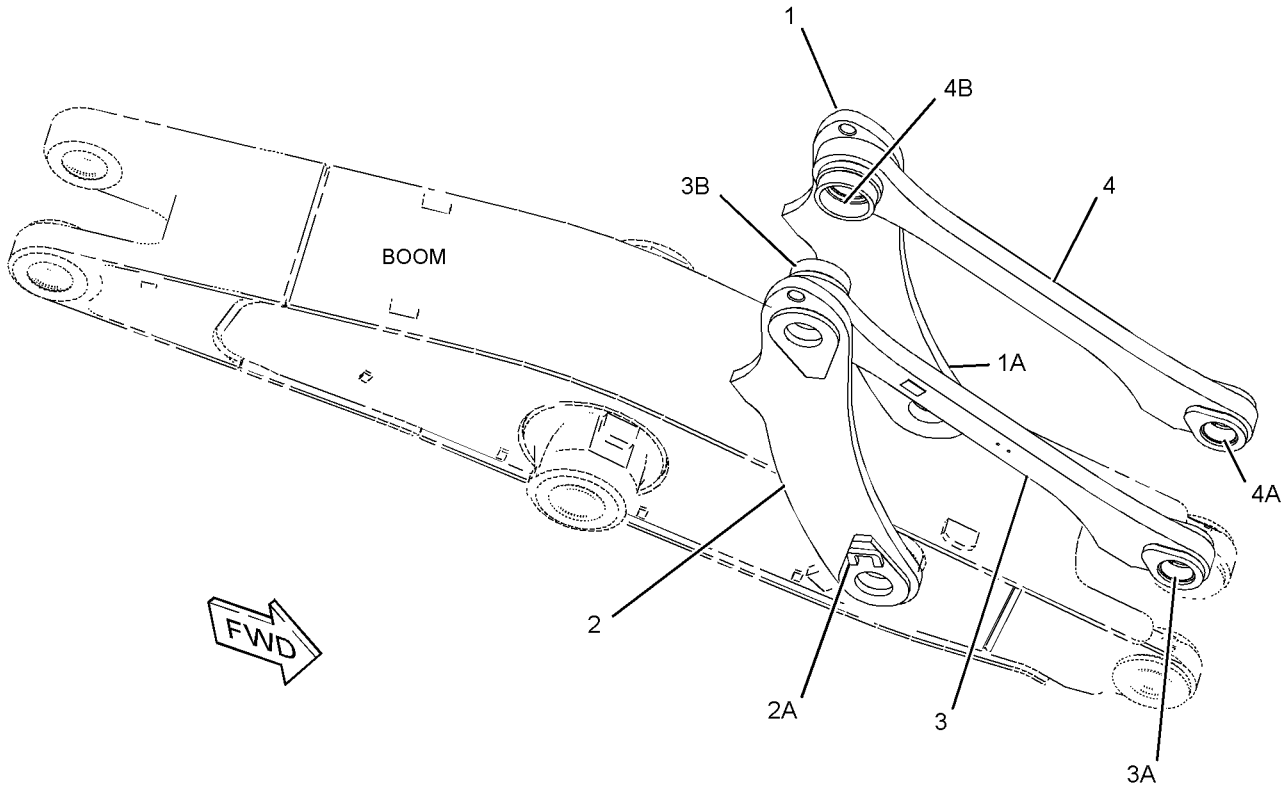

GRAPHIC #1 **<END>** g01228484

IMPLEMENTS

154-7531 PIN & SEAL GP-LINKAGE

S/N: BXY1-UP
BUCKET CONTROL
PART OF 225-5432, 284-2735 CHASSIS AR

SMCS-6118 **i03370721**

NOTE	REF NO	GRAPHIC REF	PART NUMBER	QTY	PART NAME 1 2 3 4 5 6 (PRODUCT LEVEL)	SEE PAGE
	1	2	**1R-1052**	4	SEAL AS	
	2	1	**1R-1060**	10	SEAL AS	
	3	2	**2D-4867**	1	FITTING-GREASE	
B	4	2	**2H-3933**	2	SEAL-O-RING	
	5	2	**3B-8489**	1	FITTING-GREASE	
B	6	2	**4E-5609**	5	PLATE	
B	7	2	**4F-7507**	4	SEAL-O-RING	
	8	1,2	**5K-5959**	5	SEAL-O-RING	
	9	2	**9X-4599**	8	SEAL-LIP TYPE	
	10	2	**9X-4601**	8	SEAL-LIP TYPE	
	11	2	**343-6813**	4	COLLAR	
	12	2	**152-3730**	2	PLATE	
	13	2	**152-3732**	4	PLATE-SEAL	
	14	2	**152-3738**	1	PIN (F PIN)	
	15	2	**152-3741**	1	PIN (E PIN)	
	16	2	**152-3742**	1	PLATE	
	17	1	**152-3748**	2	PLATE AS	
	18	1	**152-3751**	2	PLATE AS	
	19	1	**152-3753**	2	PLATE	
	20	2	**167-6769**	2	PLATE	
	21	2	**167-6771**	3	PLATE AS	
					(EACH INCLUDES)	
		2	**8C-4403**	2	DOWEL	
	22	2	**168-4331**	2	PIN AS (C PIN)	
	23	2	**168-4332**	1	PIN AS (G PIN)	
	24	2	**168-8508**	2	SEAL-LIP TYPE	
	25	1	**171-6757**	2	PIN (K & Y PINS)	
	26	1	**187-0565**	2	SEAL-V-RING	
	27	2	**190-1701**	4	COLLAR	
	28	2	**194-1674**	2	PLATE	
	29	2	**196-7365**	2	PIN AS (A PIN)	
	30	2	**196-7369**	2	PIN AS (B PIN)	
M	31	1	**147-2001**	4	BOLT (M36X4X100-MM)	
	32	2	**177-1449**	4	BOLT	
M	35	2	**7X-2552**	10	BOLT (M16X2X30-MM)	
M	36	2	**7X-2553**	4	BOLT (M16X2X40-MM)	
M	37	2	**7X-2575**	4	BOLT (M24X3X60-MM)	
M	38	2	**7X-2583**	3	BOLT (M30X3.5X120-MM)	
M	39	2	**8C-8722**	4	NUT (M30X3.5-THD)	
M	40	2	**8T-4140**	4	BOLT (M16X2X60-MM)	
	41	2	**8T-4167**	4	WASHER-HARD (26X44X4-MM THK)	
	42	2	**9X-8257**	18	WASHER (17.5X30X3.5-MM THK)	
	43	2	**9X-8258**	11	WASHER (33X56X6-MM THK)	
	44	1	**9X-8259**	4	WASHER (39X66X6-MM THK)	
B	46	2	**279-6102**	6	SHIM (1-MM THK)	
B	47	2	**279-6103**	6	SHIM (2-MM THK)	

B-USE AS REQUIRED
M-METRIC PART

154-7531 **PIN & SEAL GP-LINKAGE** *(contd.)* **i03370721**

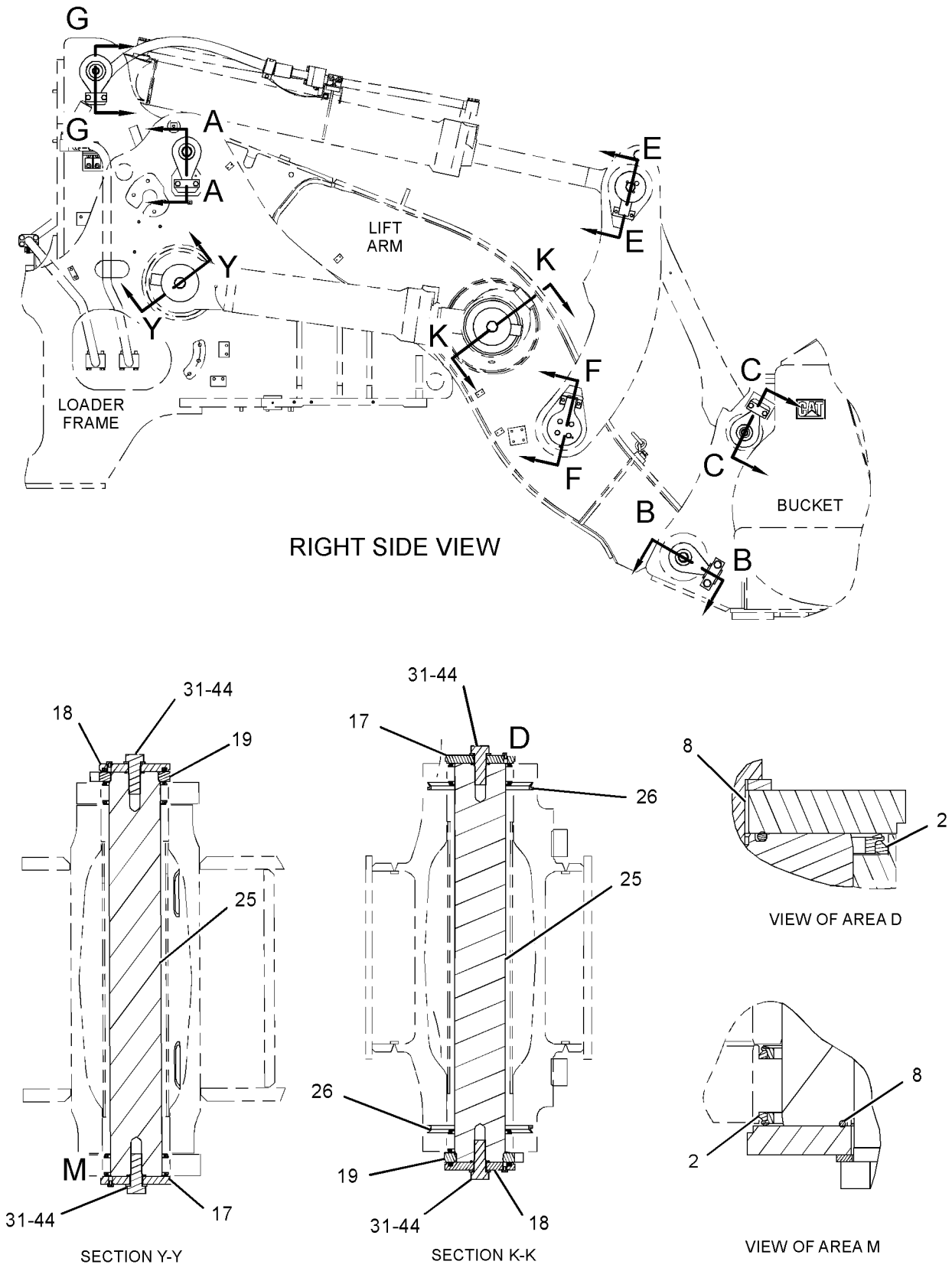

GRAPHIC #1 g02056596

154-7531 **PIN & SEAL GP-LINKAGE** *(contd.)* **i03370721**

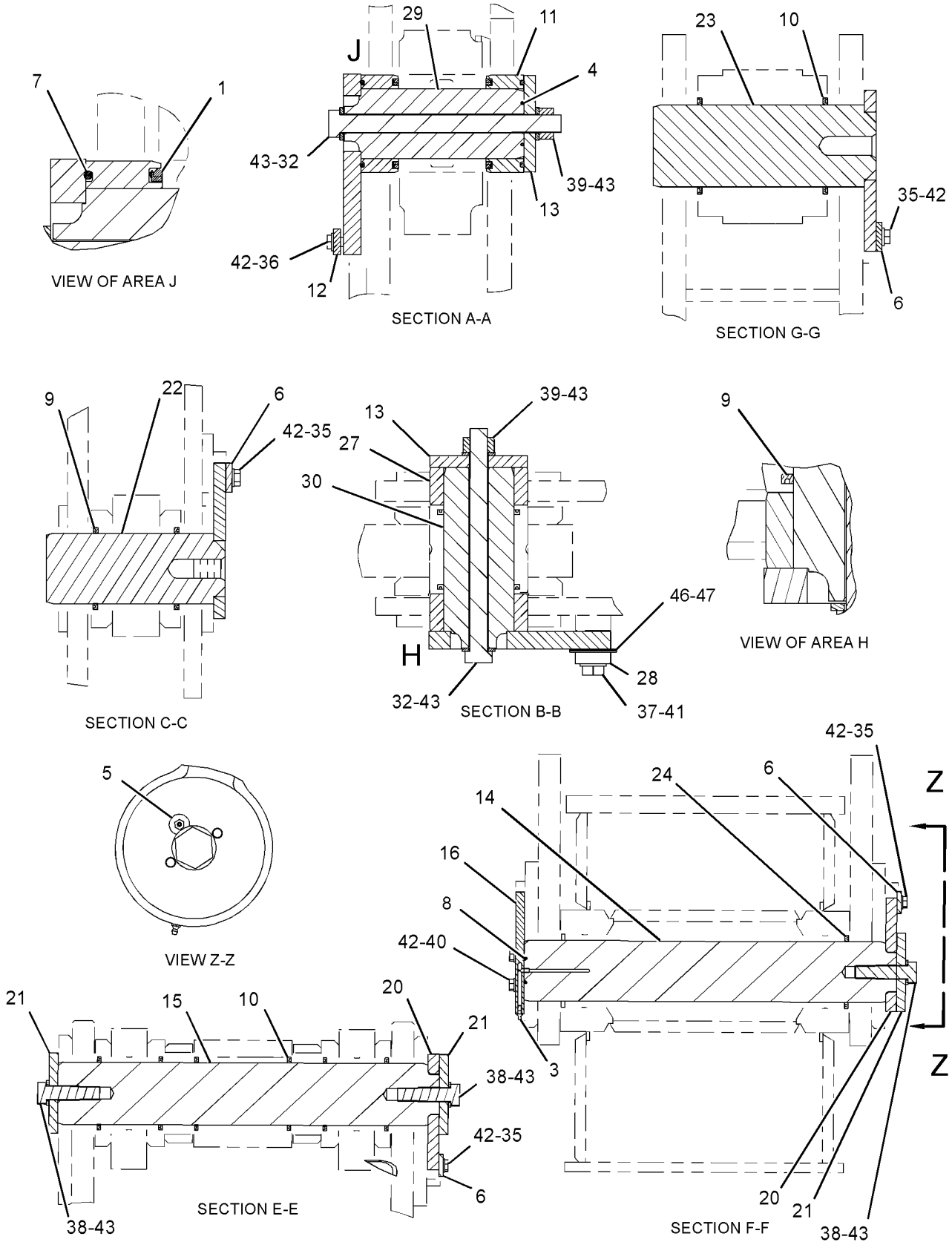

GRAPHIC #2 **<END>** g02057176

OPERATOR STATION

173-1028 ADJUSTER GP-SEAT

S/N: BXY1-UP
PART OF 178-0603, 285-8423 SEAT GP
ALSO AN ATTACHMENT

SMCS-7321 **i03396461**

NOTE	REF NO	GRAPHIC REF	PART NUMBER	QTY	PART NAME 1 2 3 4 5 6 (PRODUCT LEVEL)	SEE PAGE
	1	1	**4V-8256**	4	SPRING	
	2	1	**117-4492**	1	ROD	
	3	1	**136-1544**	1	LATCH AS (LH)	
	4	1	**156-5545**	1	LATCH AS (RH)	
	5	1	**164-4531**	1	ROD	
	6	1	**170-1112**	1	PLATE AS	
	7	1	**170-1114**	1	HANDLE (SLIDE ADJUSTMENT)	
	8	1	**170-1115**	1	HANDLE (TILT ADJUSTMENT)	
	9	1	**132-0338**	2	WASHER-PLASTIC (13X31.7X0.8-MM THK)	
	10	1	**2K-4973**	2	LOCKNUT (3/8-16-THD)	
	11	1	**7X-0608**	2	WASHER-HARD (10.2X16X2-MM THK)	

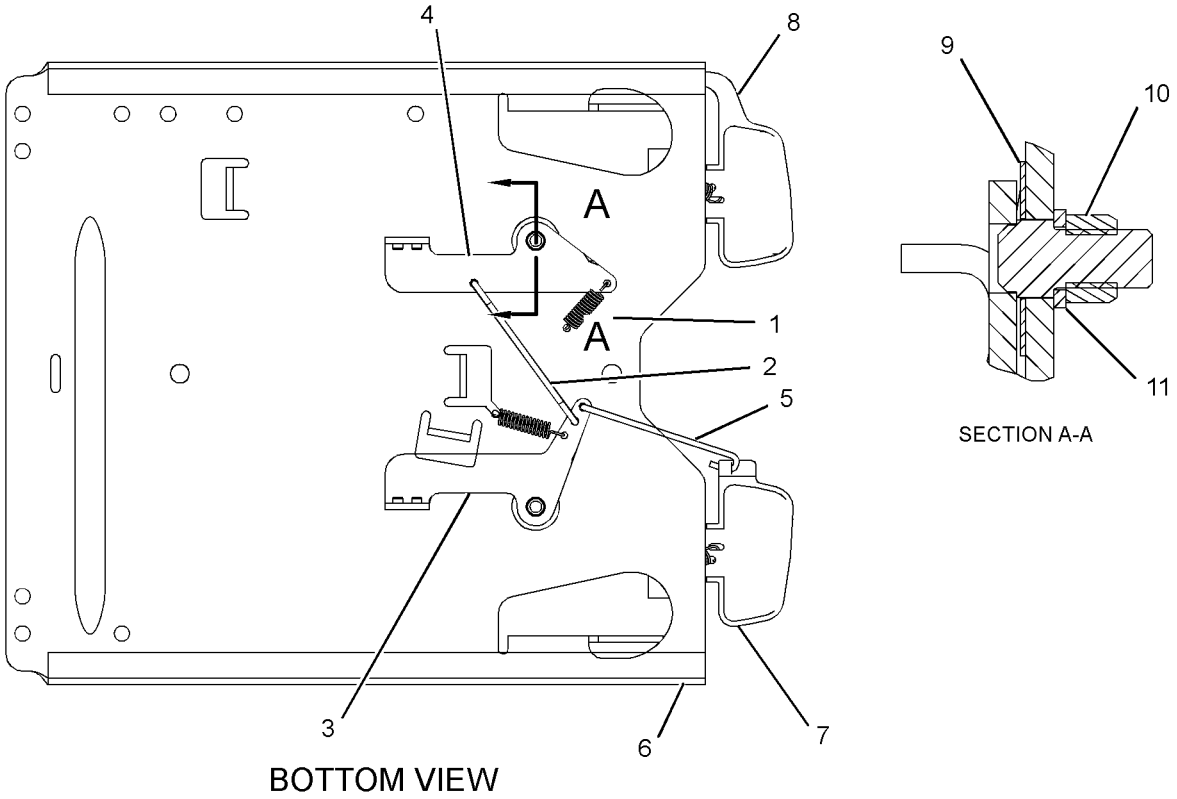

GRAPHIC #1 **<END>** g01191495

OPERATOR STATION

214-0783 AIR COMPRESSOR GP-SEAT—HEAVY-DUTY

S/N: BXY1-UP

OPTIONAL FIELD REPLACEMENT FOR 237-3970 STANDARD DUTY COMPRESSOR

SMCS-731S, 7324 **i02638502**

NOTE	REF NO	GRAPHIC REF	PART NUMBER	QTY	PART NAME 1 2 3 4 5 6 (PRODUCT LEVEL)	SEE PAGE
	1	1	**5P-4423**	1	ELBOW	
	2	1	**5P-4432**	1	ELBOW-AIR BRAKE	
	3	1	**175-5058**	1	MOUNT	
	4	1	**186-5107**	3	SCREW-DRIVE (8-16X1.25-IN)	
	5	1	**214-0784**	1	COMPRESSOR AS	

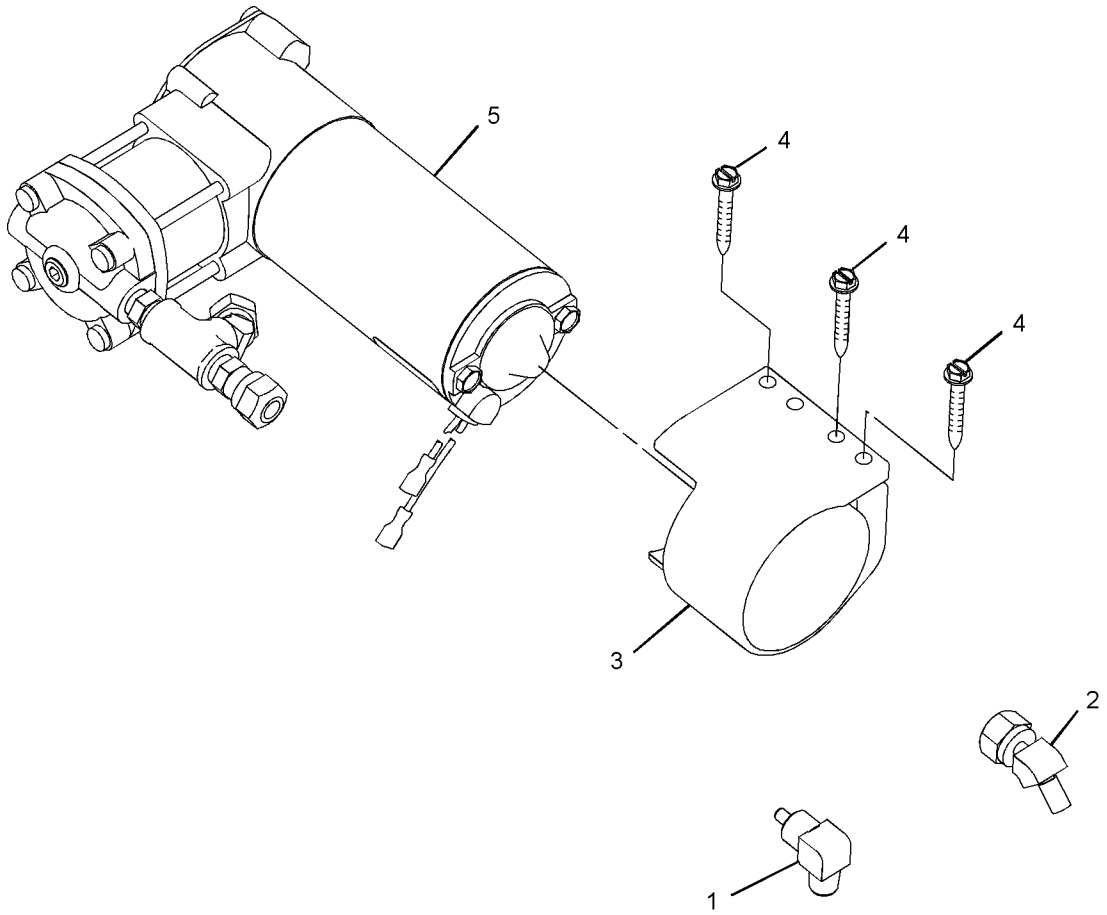

GRAPHIC #1 **<END>** g01040572

OPERATOR STATION

237-3970 AIR COMPRESSOR GP-SEAT

S/N: BXY1-UP

FOR OPTIONAL FIELD REPLACEMENT ORDER 214-0783 COMPRESSOR, 211-5358 CONDUIT(100-CM) & 5P-6010 TUBE (1-M), PROVIDES HEAVY DUTY SEAT COMPRESSOR PART OF 191-2933 SUSPENSION GP-SEAT ALSO AN ATTACHMENT

SMCS-731S, 7324 **i02012095**

NOTE	REF NO	GRAPHIC REF	PART NUMBER	QTY	PART NAME 1 2 3 4 5 6 (PRODUCT LEVEL)	SEE PAGE
					(NO SERVICED PARTS)	

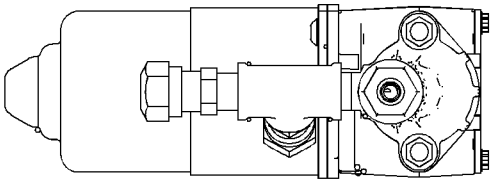

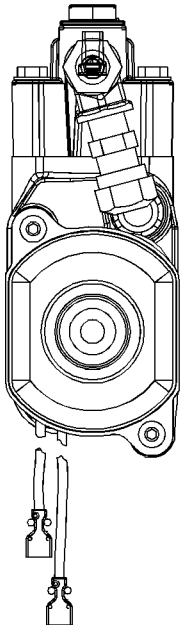

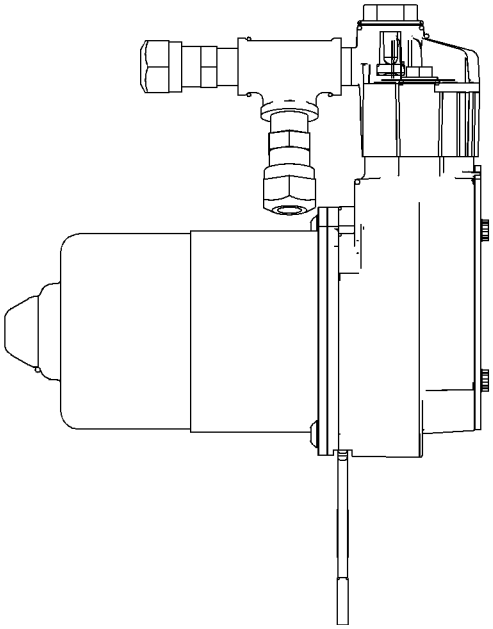

GRAPHIC #1 **<END>** g01040576

OPERATOR STATION

147-3120 AIR CONDITIONER & MOUNTING GP

S/N: BXY1-UP
PART OF 227-3190, 292-6110, 308-2727 CAB AR
ALSO AN ATTACHMENT

SMCS-7320 **i02933482**

NOTE	REF NO	GRAPHIC REF	PART NUMBER	QTY	PART NAME 1 2 3 4 5 6 (PRODUCT LEVEL)	SEE PAGE
	1	1	**2G-0395**	2	TUBE	
	2	1	**110-6393**	1	PLATE-INSTRUCTION (AIR CONDITIONER)	
Y	3	1	**115-0627**	1	AIR CONDITIONER GP	1697
Y	4	1	*131-1274*	1	LINES GP-AIR CONDITIONER	1788
Y	5	1	*162-5812*	1	LINES GP-CAB HEATER	1794
M	6	1	**9X-2040**	4	SCREW-TRUSS HEAD (M10X1.5X25-MM)	

M-METRIC PART
Y-SEPARATE ILLUSTRATION

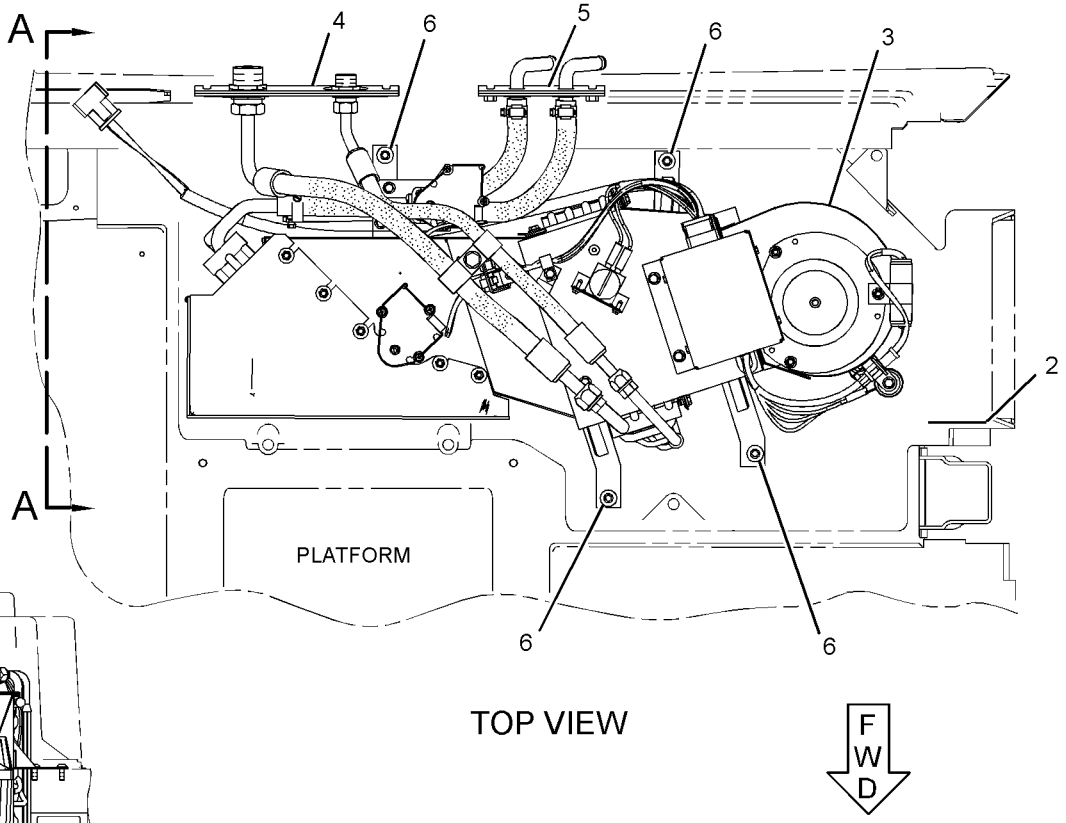

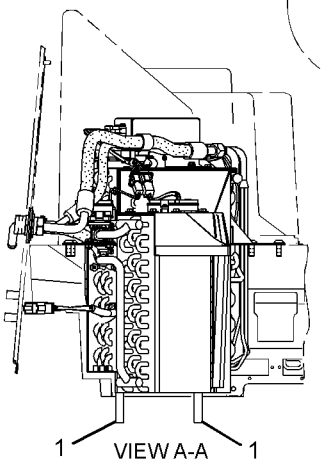

GRAPHIC #1 **<END>** g01456090

OPERATOR STATION

331-0314 AIR CONDITIONER AR

S/N: BXY2810-UP
PART OF 292-6110, 308-2727, 346-3826 CAB AR
ALSO AN ATTACHMENT

SMCS-7320 **i03471301**

NOTE	REF NO	GRAPHIC REF	PART NUMBER	QTY	PART NAME 1 2 3 4 5 6 (PRODUCT LEVEL)	SEE PAGE
	1	1	**2G-0395**	2	TUBE	
Y	2	1	**115-0627**	1	AIR CONDITIONER GP	1697
Y	3	1	*229-0066*	1	LINES GP-CAB HEATER	1795
Y	4	1	*331-0315*	1	LINES GP-AIR CONDITIONER	1790
M	5	1	**9X-2040**	4	SCREW-TRUSS HEAD (M10X1.5X25-MM)	

M-METRIC PART
Y-SEPARATE ILLUSTRATION

331-0314 **AIR CONDITIONER AR** *(contd.)* **i03471301**

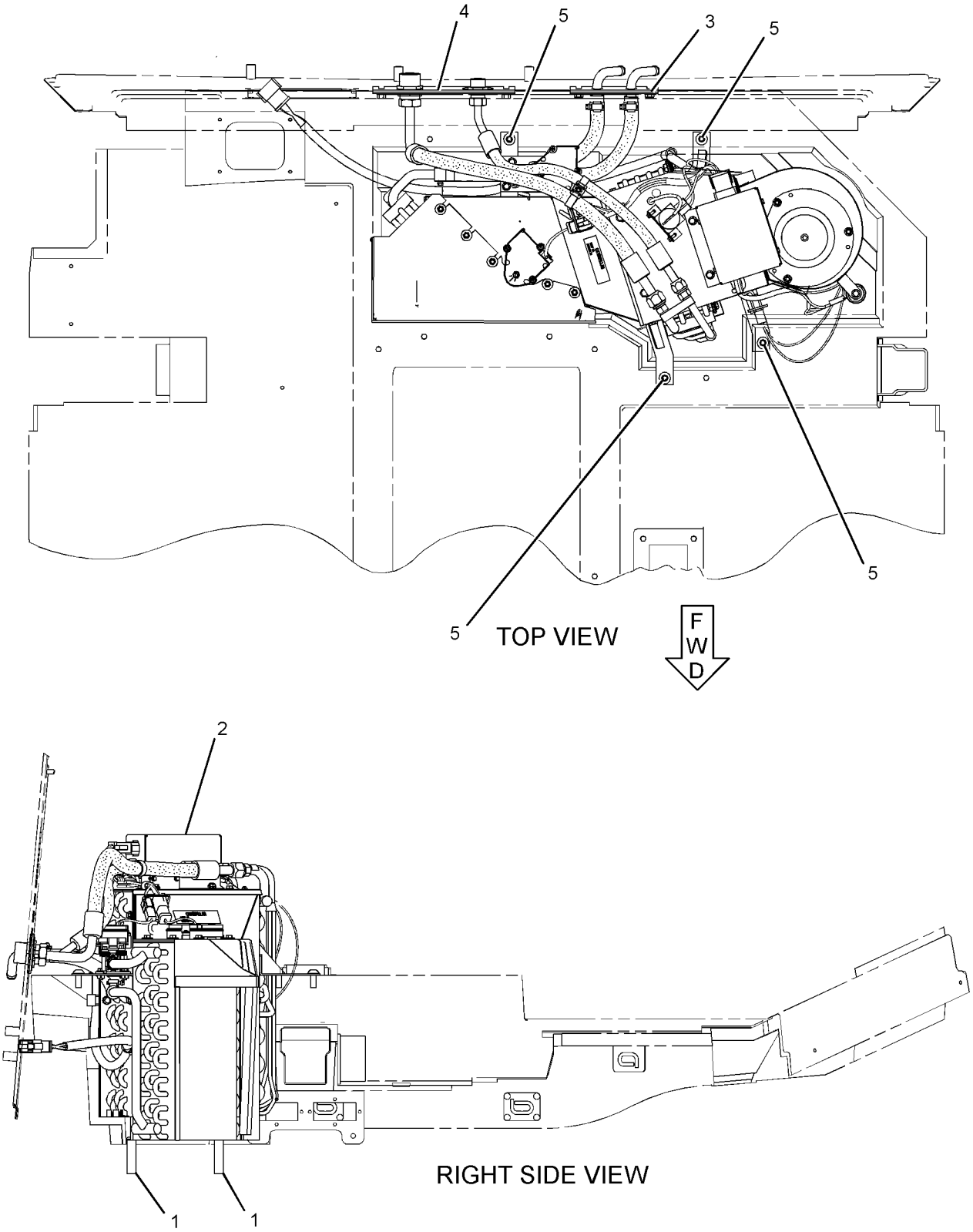

GRAPHIC #1 **<END>** g01876423

OPERATOR STATION

115-0627 AIR CONDITIONER GP

S/N: BXY1-UP

PART OF 147-3120 AIR CONDITIONER & MOUNTING GP, 331-0314 AIR CONDITIONER AR
ALSO AN ATTACHMENT

SMCS-7320 **i03387640**

NOTE	REF NO	GRAPHIC REF	PART NUMBER	QTY	PART NAME 1 2 3 4 5 6 (PRODUCT LEVEL)	SEE PAGE
C	1	1	**2V-3216**	1	CLIP	
	2	1	**3B-4501**	2	LOCKWASHER (#8)	
	3	1	**3E-0400**	2	BLOWER AS	
	4	1	**3E-5464**	1	THERMOSTAT (HVAC) (REFRIGERANT)	
	5	1	**3S-2093**	4	STRAP-CABLE	
CM	6	1	**5C-9553**	19	BOLT (M6X1X16-MM)	
	7	1	**5P-4115**	5	WASHER-HARD (7.2X19X2-MM THK)	
	8	1	**6V-1668**	2	WASHER (6.5X29.1X3-MM THK)	
	9	1	**6V-7646**	1	WASHER-HARD (7.2X25X2-MM THK)	
	10	1	**8C-3756**	1	FILM-IDENTIFICATION (GROUP NO., SEQUENCE NO.)	
	11	1	**8C-4586**	2	CLAMP	
	12	1	**8P-5141**	2	PLATE-ORIFICE	
M	13	1	**8T-0337**	3	SCREW-MACHINE (M4X0.7X12-MM)	
	14	1	**8T-4205**	30	WASHER-HARD (7.2X14.5X2-MM THK)	
	15	1	**8T-6631**	2	SCREW-MACHINE (8-32X0.5-IN)	
	16	1	**9G-1950**	1	RESISTOR	
C	17	1	**9M-8406**	2	CLIP	
	18	1	**9X-2185**	4	SCREW (8-15X0.44-IN)	
C	19	1	**9X-2488**	2	CLAMP-HOSE	
M	20	1	**9X-8498**	1	BOLT (M6X1X180-MM)	
	21	1	**068-8993**	1	GROMMET	
	22	1	**113-8113**	1	ROD	
	23	1	**126-5606**	1	COIL AS-EVAPORATOR	
	24	1	**126-5607**	1	COIL AS-HEATER	
	25	1	**126-5608**	1	HOUSING AS	
	26	1	**126-5609**	1	PLATE AS	
	27	1	**126-5612**	1	HARNESS AS-HEATER & AIR COND	
		1	**8T-8737**	4	PLUG-SEAL	
		1	**102-8801**	1	KIT-RECEPTACLE (12-PIN)	
					(INCLUDES RECEPTACLE AS & WEDGE)	
		1	**155-2255**	1	KIT-CONNECTING PLUG (12-PIN)	
		1	**155-2270**	2	KIT-CONNECTING PLUG (2-PIN)	
					(TO BLOWER MOTOR & WATER VALVE MOTOR)	
		1	**155-2274**	1	KIT-CONNECTING PLUG (6-PIN)	
					(EACH KIT INCLUDES PLUG AS & WEDGE)	
	28	1	**126-6006**	1	DOOR AS	
	29	1	**126-6009**	1	COVER	
	30	1	**126-6010**	1	CONTROL AS	
	31	1	**127-6422**	1	PLATE AS	
	32	1	**127-6423**	1	PLATE	
M	33	1	**129-3178**	12	LOCKNUT (M6X1-THD)	
	34	1	**130-1888**	1	GASKET	
	35	1	**130-1890**	6	GASKET	
	36	1	**131-0820**	1	GASKET	
	37	1	**131-0821**	1	GASKET	
	38	1	**131-0822**	1	GASKET	
	39	1	**131-3093**	1	BUSHING	
	40	1	**211-9047**	1	VALVE AS-WATER	
	41	1	**220-1828**	1	MOTOR-ACTUATOR	
	42	1	**316-1927**	1	MOTOR AS-BLOWER (24-VOLT, A/C, HEATER)	
		1	**9W-0852**	2	PIN-CONNECTOR (14-GA)	
		1	**102-8802**	1	KIT-RECEPTACLE (2-PIN)	
					(INCLUDES RECEPTACLE AS & WEDGE)	
M	43	1	**6V-7728**	1	BOLT (M6X1X45-MM)	
CM	44	1	**8T-4138**	2	BOLT (M6X1X20-MM)	

OPERATOR STATION

115-0627 AIR CONDITIONER GP *(contd.)* i03387640

NOTE	REF NO	GRAPHIC REF	PART NUMBER	QTY	PART NAME 1 2 3 4 5 6 (PRODUCT LEVEL)	SEE PAGE
D	45	1	**6V-2496**		SEAL (0.54-M)	
CE	46	1	**136-1953**		HOSE (16-CM)	
E	47	1	**126-8472**		SEAL (38.1-CM EACH)	
D	48	1	**5P-5908**		SEAL (1.15-M)	
	49	1	**4F-2320**	3	WASHER (5.5X11X1.6-MM THK)	

C-CHANGE FROM PREVIOUS TYPE
D-ORDER BY THE METER
E-ORDER BY THE CENTIMETER
M-METRIC PART

115-0627 AIR CONDITIONER GP *(contd.)* **i03387640**

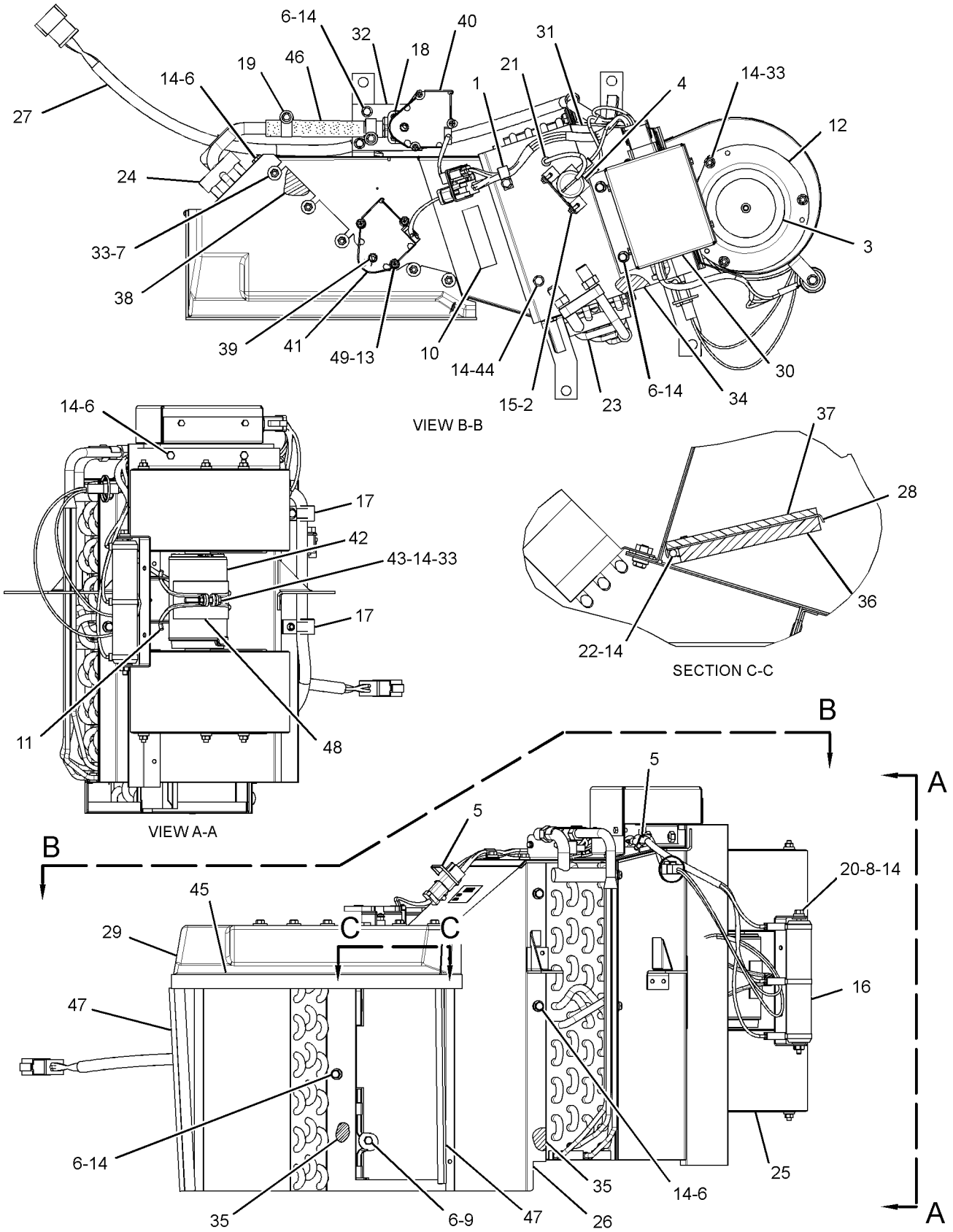

GRAPHIC #1 **<END>** g01862415

OPERATOR STATION

214-7634 ARM GP-WINDOW WIPER—REAR

S/N: BXY1-UP
PART OF 109-8196, 183-3756 WIPER GP-WINDOW
ALSO AN ATTACHMENT

SMCS-7305 **i02023663**

NOTE	REF NO	GRAPHIC REF	PART NUMBER	QTY	PART NAME 1 2 3 4 5 6 (PRODUCT LEVEL)	SEE PAGE
M	1	1	**191-8921**	2	BOLT-SOCKET HEAD (M6X1X25-MM)	
	2	1	**227-7392**	2	WASHER (6.3X10.3X0.4-MM THK)	
M	3	1	**6V-8225**	2	NUT (M6X1-THD)	
	4	1	**136-3195**	1	NOZZLE AS-WASHER	
	5	1	**136-3188**	3	CLIP	

M-METRIC PART

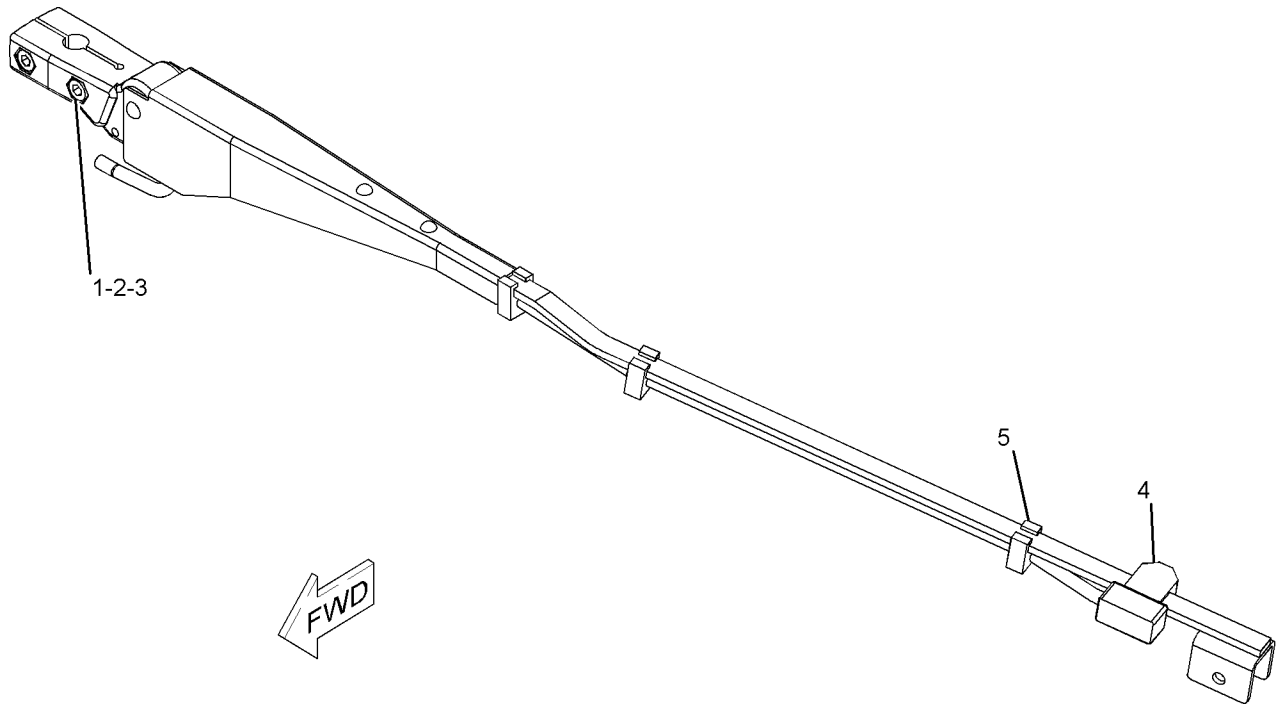

GRAPHIC #1 **<END>** g01024688

OPERATOR STATION

214-7635 ARM GP-WINDOW WIPER—FRONT

S/N: BXY1-UP
PART OF 109-8196, 183-3756 WIPER GP-WINDOW
ALSO AN ATTACHMENT

SMCS-7305 **i02023666**

NOTE	REF NO	GRAPHIC REF	PART NUMBER	QTY	PART NAME 1 2 3 4 5 6 (PRODUCT LEVEL)	SEE PAGE
M	1	1	**191-8921**	4	BOLT-SOCKET HEAD (M6X1X25-MM)	
	2	1	**227-7392**	4	WASHER (6.3X10.3X0.4-MM THK)	
M	3	1	**6V-8225**	4	NUT (M6X1-THD)	
	4	1	**136-3190**	1	NOZZLE AS-WASHER	
	5	1	**136-3188**	3	CLIP	

M-METRIC PART

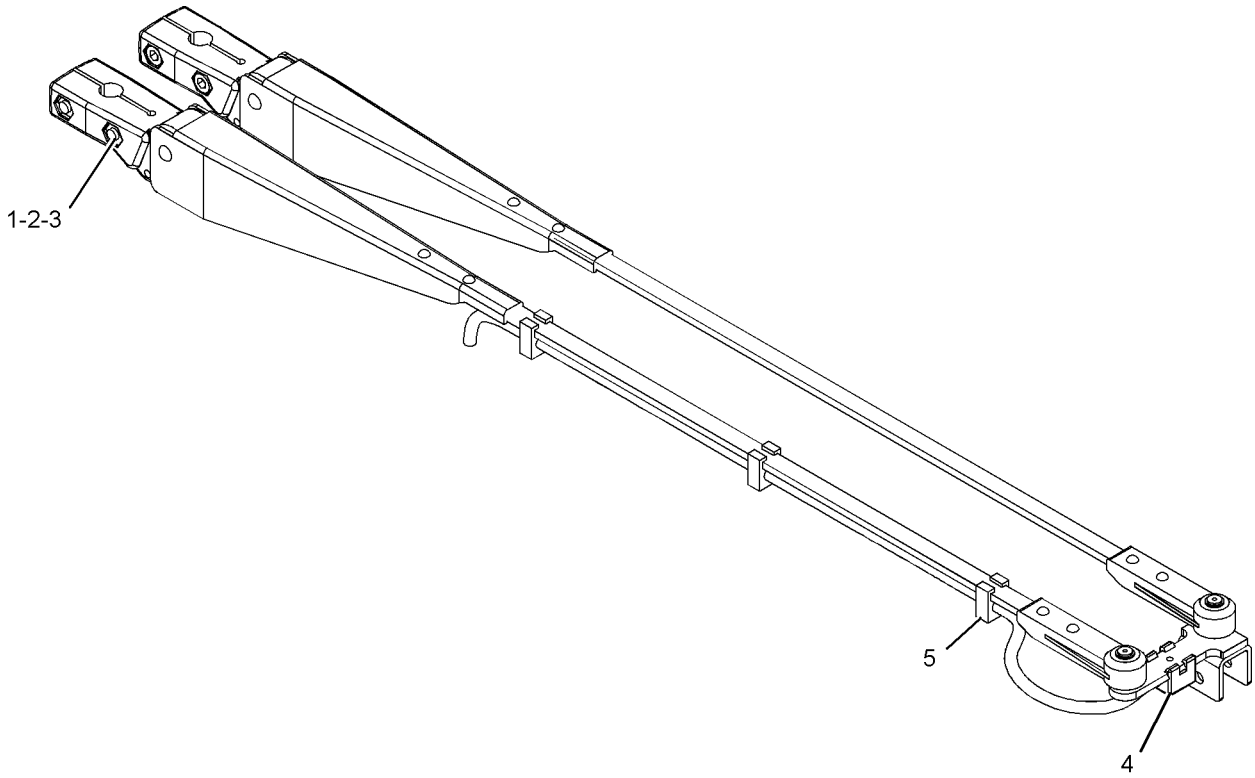

GRAPHIC #1 **<END>** g01021918

OPERATOR STATION

2Q-8732 CAB AR

S/N: BXY1900-UP
CANNOT BE USED WITH 300-2780—PAGE 1703, 2Q-8733—PAGE 7
AN ATTACHMENT

SMCS-7301 **i02728059**

NOTE	PART NUMBER	QTY	PART NAME 1 2 3 4 5 6 (PRODUCT LEVEL)	SEE PAGE
Y	*308-2708*	1	ROPS GP-ENCLOSED	1872

Y-SEPARATE ILLUSTRATION

<END>

227-3190 CAB AR

S/N: BXY1-1899
PART OF 227-3200 OPERATOR AR

SMCS-7301 **i02225480**

NOTE	PART NUMBER	QTY	PART NAME 1 2 3 4 5 6 (PRODUCT LEVEL)	SEE PAGE
Y	*147-3120*	1	AIR CONDITIONER & MOUNTING GP	1694
Y	*169-8258*	1	CONTROL GP-FOOT BRAKE	1282
Y	*141-4644*	1	CONTROL GP-PARKING BRAKE	1284
Y	*141-4940*	1	CONTROL GP-STEERING (STIC)	1724
Y	*4E-8413*	1	CONTROL GP-STIC	1726
Y	*187-0738*	1	CONTROL GP-STIC LOCKOUT	1729
Y	*164-4237*	1	COVER GP-DASH	1734
Y	*165-6769*	1	DUCT & FILTER GP-CAB AIR	1752
Y	*165-6560*	1	DUCT GP-CAB AIR	1754
Y	*228-9628*	1	INSTALLATION GP-RADIO	1761
Y	*228-0920*	1	LINER GP-CAB	1768
Y	*227-3192*	1	PANEL GP-INSTRUMENT (UPPER)	1828
Y	*227-3198*	1	PANEL GP-INSTRUMENT (LOWER)	1830
Y	*141-4645*	1	PEDAL GP-GOVERNOR	1832
Y	**228-9530**	1	ROPS GP-ENCLOSED	1860
Y	*117-1410*	1	SEALING GP-GLASS	1878
Y	**200-3174**	1	SEAT GP-SUSPENSION (CLOTH, AIR)	1888
Y	*228-9624*	1	SUPPORT GP-HYDRAULIC CONTROL	1890
Y	*173-1905*	1	SUPPORT GP-SEAT	1897
Y	*171-3897*	1	SUPPORT GP-STEERING CONTROL	1899
Y	*173-9375*	1	SUPPRESSION GP-CAB SOUND	1902
Y	*109-8196*	1	WIPER GP-WINDOW	1909
Y	*261-0400*	1	WIRING GP-CAB	484

Y-SEPARATE ILLUSTRATION

<END>

OPERATOR STATION

292-6110 CAB AR

S/N: BXY1900-3999

PART OF 292-6092 OPERATOR AR

SMCS-7301 **i03470920**

NOTE	PART NUMBER	QTY	PART NAME 1 2 3 4 5 6 (PRODUCT LEVEL)	SEE PAGE
Y	*147-3120*	1	AIR CONDITIONER & MOUNTING GP	1694
			S/N: BXY1900-2809	
Y	*331-0314*	1	AIR CONDITIONER AR	1695
			S/N: BXY2810-3999	
Y	*169-8258*	1	CONTROL GP-FOOT BRAKE	1282
Y	*141-4644*	1	CONTROL GP-PARKING BRAKE	1284
Y	*141-4940*	1	CONTROL GP-STEERING (STIC)	1724
Y	*4E-8413*	1	CONTROL GP-STIC	1726
Y	*187-0738*	1	CONTROL GP-STIC LOCKOUT	1729
Y	*164-4237*	1	COVER GP-DASH	1734
Y	*165-6769*	1	DUCT & FILTER GP-CAB AIR	1752
Y	*165-6560*	1	DUCT GP-CAB AIR	1754
Y	*326-3071*	1	FLOOR MAT GP	1756
Y	*228-9628*	1	INSTALLATION GP-RADIO	1761
Y	*228-0920*	1	LINER GP-CAB	1768
Y	*227-3192*	1	PANEL GP-INSTRUMENT (UPPER)	1828
Y	*227-3198*	1	PANEL GP-INSTRUMENT (LOWER)	1830
Y	*141-4645*	1	PEDAL GP-GOVERNOR	1832
Y	*326-3073*	1	ROOF GP-CAB	1859
Y	*292-6893*	1	ROPS GP-ENCLOSED	1863
Y	*117-1410*	1	SEALING GP-GLASS	1878
Y	**200-3174**	1	SEAT GP-SUSPENSION (CLOTH, AIR)	1888
Y	*228-9624*	1	SUPPORT GP-HYDRAULIC CONTROL	1890
Y	*173-1905*	1	SUPPORT GP-SEAT	1897
Y	*171-3897*	1	SUPPORT GP-STEERING CONTROL	1899
Y	*173-9375*	1	SUPPRESSION GP-CAB SOUND	1902
Y	*326-7291*	1	VALVE & MTG GP-BRAKE CONTROL	1326
Y	*109-8196*	1	WIPER GP-WINDOW	1909
Y	*261-0400*	1	WIRING GP-CAB	484

Y-SEPARATE ILLUSTRATION

<END>

300-2780 CAB AR

S/N: BXY1900-UP

CANNOT BE USED WITH 2Q-8732—PAGE 1702, 2Q-8733—PAGE 7

AN ATTACHMENT

SMCS-7301 **i02811360**

NOTE	PART NUMBER	QTY	PART NAME 1 2 3 4 5 6 (PRODUCT LEVEL)	SEE PAGE
Y	**292-6895**	1	ROPS GP-ENCLOSED	1866
Y	*183-3756*	1	WIPER GP-WINDOW	1923
M	**8T-4189**	2	BOLT (M8X1.25X20-MM)	
	250-4906	1	GASKET	
	250-3474	1	PLATE AS	
	8T-4224	2	WASHER-HARD (8.8X16X2-MM THK)	

M-METRIC PART
Y-SEPARATE ILLUSTRATION

<END>

OPERATOR STATION

308-2727 CAB AR

S/N: BXY1900-UP
PART OF 308-2725 OPERATOR AR
AN ATTACHMENT

SMCS-7301 **i03471202**

NOTE	PART NUMBER	QTY	PART NAME 1 2 3 4 5 6 (PRODUCT LEVEL)	SEE PAGE
Y	*147-3120*	1	AIR CONDITIONER & MOUNTING GP	1694
			S/N: BXY2491-2809	
Y	*331-0314*	1	AIR CONDITIONER AR	1695
			S/N: BXY2810-UP	
Y	*169-8258*	1	CONTROL GP-FOOT BRAKE	1282
Y	*141-4644*	1	CONTROL GP-PARKING BRAKE	1284
Y	*141-4940*	1	CONTROL GP-STEERING (STIC)	1724
Y	*4E-8413*	1	CONTROL GP-STIC	1726
Y	*187-0738*	1	CONTROL GP-STIC LOCKOUT	1729
Y	*164-4237*	1	COVER GP-DASH	1734
Y	*165-6769*	1	DUCT & FILTER GP-CAB AIR	1752
Y	*165-6560*	1	DUCT GP-CAB AIR	1754
Y	*326-3071*	1	FLOOR MAT GP	1756
			S/N: BXY2491-UP	
Y	*228-9628*	1	INSTALLATION GP-RADIO	1761
Y	*228-0920*	1	LINER GP-CAB	1768
Y	*227-3192*	1	PANEL GP-INSTRUMENT (UPPER)	1828
Y	*227-3198*	1	PANEL GP-INSTRUMENT (LOWER)	1830
Y	*141-4645*	1	PEDAL GP-GOVERNOR	1832
Y	*310-8266*	1	ROOF GP-CAB	1858
			S/N: BXY2491-UP	
Y	**292-6895**	1	ROPS GP-ENCLOSED	1866
Y	**200-3174**	1	SEAT GP-SUSPENSION (CLOTH, AIR)	1888
Y	*228-9624*	1	SUPPORT GP-HYDRAULIC CONTROL	1890
Y	*173-1905*	1	SUPPORT GP-SEAT	1897
Y	*171-3897*	1	SUPPORT GP-STEERING CONTROL	1899
Y	*173-9375*	1	SUPPRESSION GP-CAB SOUND	1902
Y	*326-7291*	1	VALVE & MTG GP-BRAKE CONTROL	1326
			S/N: BXY2491-UP	
Y	*183-3756*	1	WIPER GP-WINDOW	1923
Y	*261-0400*	1	WIRING GP-CAB	484
Y	*309-8768*	1	WIRING GP-TRANSMISSION	672
	250-3474	1	PLATE AS	
M	**8T-4189**	2	BOLT (M8X1.25X20-MM)	
	250-4906	1	GASKET	
	8T-4224	2	WASHER-HARD (8.8X16X2-MM THK)	

M-METRIC PART
Y-SEPARATE ILLUSTRATION

<END>

OPERATOR STATION

346-3826 CAB AR

S/N: BXY4000-UP

PART OF 346-3822 OPERATOR AR

SMCS-7301 **i03765673**

NOTE	PART NUMBER	QTY	PART NAME 1 2 3 4 5 6 (PRODUCT LEVEL)	SEE PAGE
Y	*331-0314*	1	AIR CONDITIONER AR	1695
Y	*169-8258*	1	CONTROL GP-FOOT BRAKE	1282
Y	*141-4644*	1	CONTROL GP-PARKING BRAKE	1284
Y	*141-4940*	1	CONTROL GP-STEERING (STIC)	1724
Y	*4E-8413*	1	CONTROL GP-STIC	1726
Y	*187-0738*	1	CONTROL GP-STIC LOCKOUT	1729
Y	*164-4237*	1	COVER GP-DASH	1734
Y	*165-6769*	1	DUCT & FILTER GP-CAB AIR	1752
Y	*165-6560*	1	DUCT GP-CAB AIR	1754
Y	*326-3071*	1	FLOOR MAT GP	1756
Y	*228-9628*	1	INSTALLATION GP-RADIO	1761
Y	*228-0920*	1	LINER GP-CAB	1768
Y	*346-3850*	1	MIRROR GP-REAR VIEW	1800
Y	*227-3192*	1	PANEL GP-INSTRUMENT (UPPER)	1828
Y	*227-3198*	1	PANEL GP-INSTRUMENT (LOWER)	1830
Y	*141-4645*	1	PEDAL GP-GOVERNOR	1832
Y	*326-3073*	1	ROOF GP-CAB	1859
Y	*292-6893*	1	ROPS GP-ENCLOSED	1863
Y	*117-1410*	1	SEALING GP-GLASS	1878
Y	**200-3174**	1	SEAT GP-SUSPENSION (CLOTH, AIR)	1888
Y	*325-7180*	1	SUPPORT GP-HYDRAULIC CONTROL	1894
Y	*326-3198*	1	SUPPORT GP-SEAT	1898
Y	*171-3897*	1	SUPPORT GP-STEERING CONTROL	1899
Y	*173-9375*	1	SUPPRESSION GP-CAB SOUND	1902
Y	*326-7291*	1	VALVE & MTG GP-BRAKE CONTROL	1326
Y	*109-8196*	1	WIPER GP-WINDOW	1909
Y	*345-4460*	1	WIRING GP-CAB	518

Y-SEPARATE ILLUSTRATION

<END>

356-3417 CAB AR-ENCLOSED ROPS

S/N: BXY4000-UP

CANNOT BE USED WITH 300-2780—PAGE 1703, 2Q-8733—PAGE 7

AN ATTACHMENT

SMCS-7301 **i03800889**

NOTE	PART NUMBER	QTY	PART NAME 1 2 3 4 5 6 (PRODUCT LEVEL)	SEE PAGE
Y	*308-2708*	1	ROPS GP-ENCLOSED	1872

Y-SEPARATE ILLUSTRATION

<END>

OPERATOR STATION

218-0324 COMPRESSOR GP-REFRIGERANT

S/N: BXY1-UP

PART OF 262-4948 COMPRESSOR GP-REFRIGERANT

SMCS-1802 **i02930106**

NOTE	REF NO	GRAPHIC REF	PART NUMBER	QTY	PART NAME 1 2 3 4 5 6 (PRODUCT LEVEL)	SEE PAGE
	1	1	**102-8802**	1	KIT-RECEPTACLE (2-PIN)	
					(INCLUDES RECEPTACLE AS & WEDGE)	
	2	1	**314-4018**	1	VALVE AS-PRESSURE RELIEF (REFRIGERANT COMPRESSOR)	
		1	**9X-7378**	1	SEAL-O-RING	
	3	1	**7T-4532**	1	PLUG AS	
	4	1	**9X-7385**	2	SEAL-O-RING	
	6	1	**180-9339**	2	PIN-CONNECTOR (14-GA TO 18-GA)	

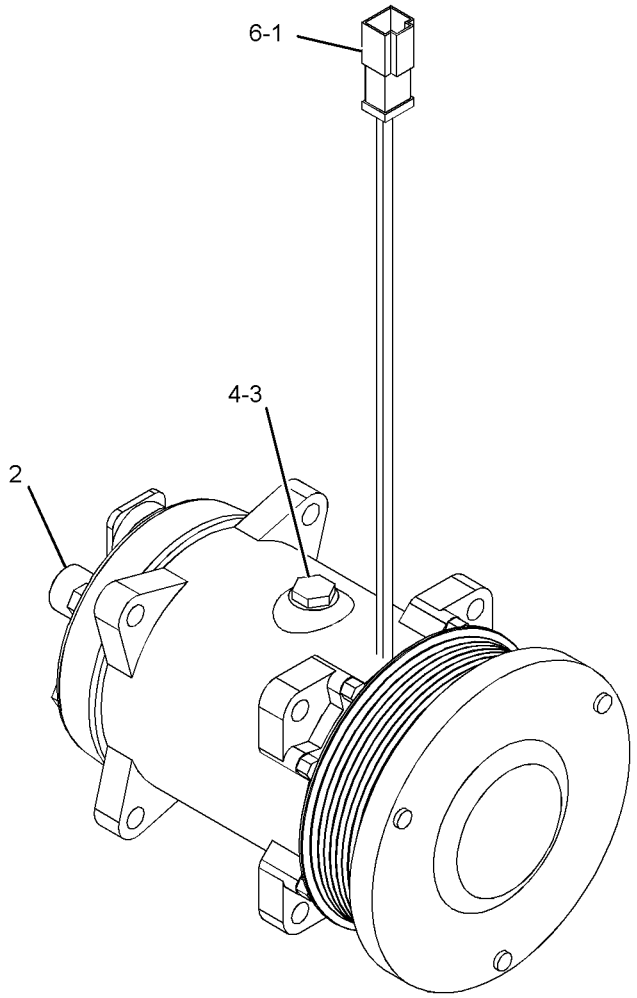

GRAPHIC #1 **<END>** g01455552

OPERATOR STATION

262-4948 COMPRESSOR GP-REFRIGERANT

S/N: BXY1-UP

PART OF 226-9643 INSTALLATION AR-ENGINE

SMCS-1802 **i02961476**

NOTE	REF NO	GRAPHIC REF	PART NUMBER	QTY	PART NAME 1 2 3 4 5 6 (PRODUCT LEVEL)	SEE PAGE
Y	1	1	**218-0324**	1	COMPRESSOR GP-REFRIGERANT	1706
M	2	1	**8T-0389**	2	LOCKNUT (M10X1.5-THD)	
	3	1	**8T-4121**	2	WASHER-HARD (11X21X2.5-MM THK)	
M	4	1	**8T-5436**	2	BOLT (M10X1.5X130-MM)	
	5	1	**8T-7934**	2	WASHER-HARD (11X21X5-MM THK)	

M-METRIC PART
Y-SEPARATE ILLUSTRATION

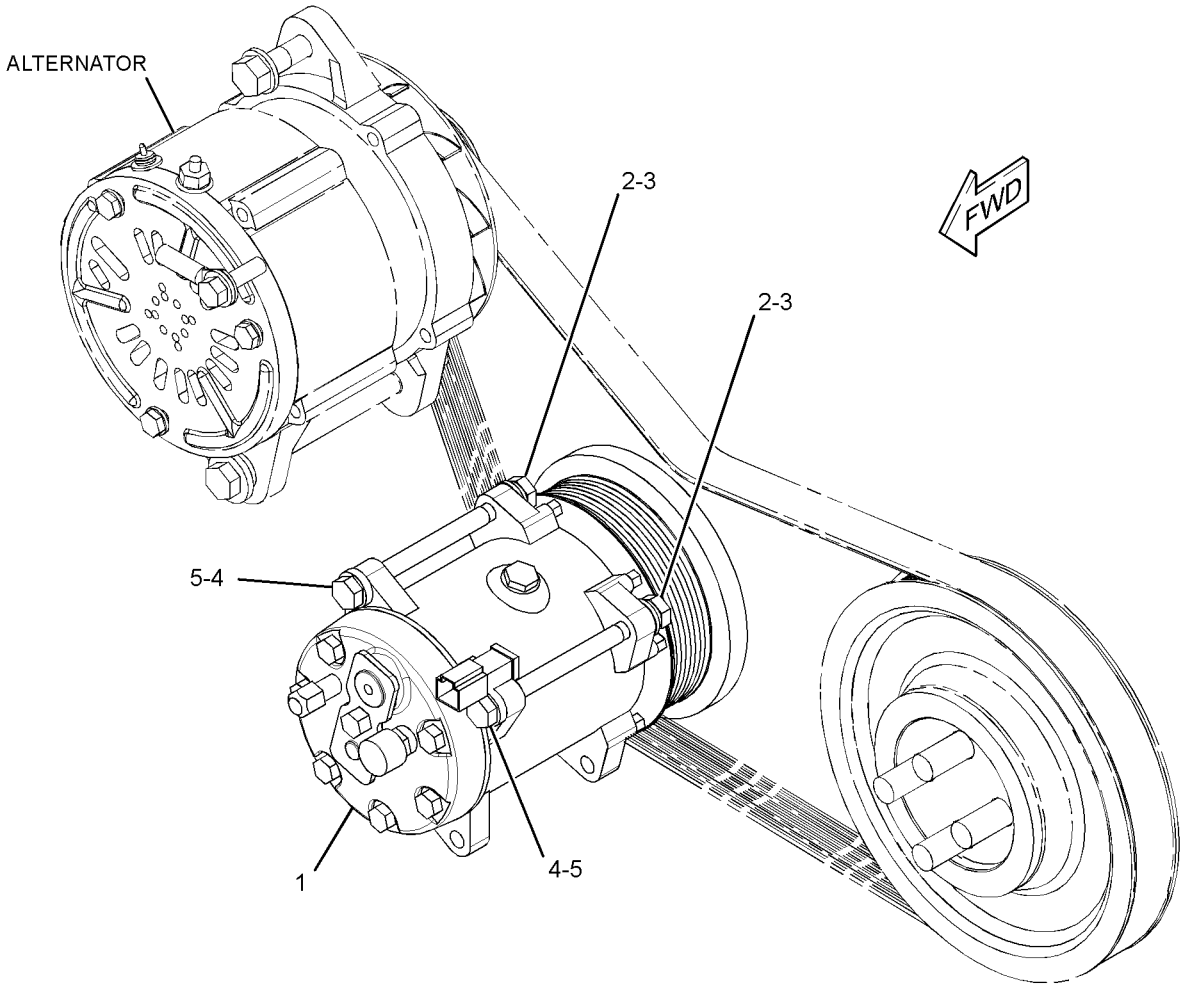

GRAPHIC #1 **<END>** g01514239

OPERATOR STATION

114-5172 CONDENSER GP-REFRIGERANT

S/N: BXY1-UP

PART OF 225-5432, 284-2735 CHASSIS AR

SMCS-1805 **i01468802**

NOTE	REF NO	GRAPHIC REF	PART NUMBER	QTY	PART NAME 1 2 3 4 5 6 (PRODUCT LEVEL)	SEE PAGE
	1	1	**6N-8744**	4	MOUNT	
	2	1	**7X-0632**	8	WASHER-HARD (11X36X6-MM THK)	
	3	1	**132-3968**	1	CORE AS-CONDENSER	
	4	1	**135-6925**	1	ANGLE	
	5	1	**135-6926**	1	ANGLE	
	6	1	**7X-7729**	6	WASHER (11X25X3-MM THK)	
	7	1	**8T-4123**	4	WASHER (22X35X3.5-MM THK)	
M	8	1	**8T-4136**	6	BOLT (M10X1.5X25-MM)	
M	9	1	**8T-4186**	4	BOLT (M10X1.5X40-MM)	

M-METRIC PART

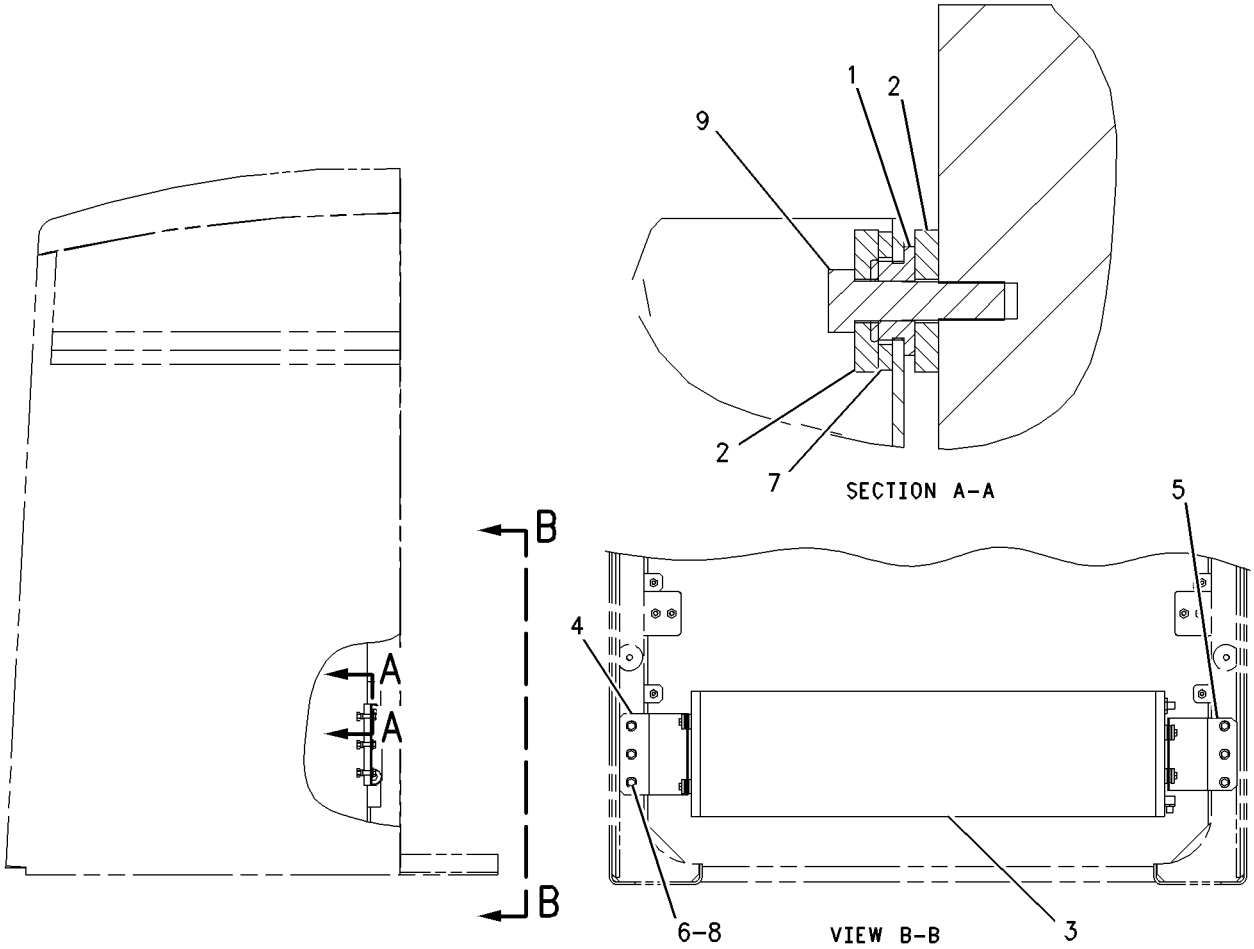

GRAPHIC #1 **<END>** g00766337

OPERATOR STATION

227-0966 CONTROL GP-ELECTROHYDRAULIC—3-FUNCTION

S/N: BXY1-UP

PART OF 255-0041, 255-0043, 298-6963, 298-6965 LIFT AR AN ATTACHMENT

SMCS-5702 **i02618402**

NOTE	REF NO	GRAPHIC REF	PART NUMBER	QTY	PART NAME 1 2 3 4 5 6 (PRODUCT LEVEL)	SEE PAGE
M	2	2	**5C-2874**	4	NUT (M5X0.8-THD)	
	3	2	**8L-8413**	8	STRAP-CABLE	
	4	2	**8T-0328**	6	WASHER-HARD (5.5X10X1-MM THK)	
	5	2	**8T-8737**	2	PLUG-SEAL	
	6	1	**9T-4735**	1	SPRING	
	7	2	**097-9169**	1	SPACER (7.5X12X12-MM THK)	
	8	1	**105-2976**	4	FLANGE	
	9	1	**105-3372**	1	SPRING	
	10	2	**106-1582**	1	HOUSING	
	11	2	**106-1584**	2	SPACER (6.22X9.52X85-MM THK)	
	12	2	**114-4244**	2	PLATE	
	13	1,2	**114-4247**	4	BRACKET AS	
	14	2	**114-8165**	2	ROD	
	15	2	**114-8167**	1	BRACKET AS	
M		2	**6V-9632**	10	NUT-WELD (M6X1-THD)	
	16	1,2	**133-7215**	3	DEFLECTOR	
	17	1	**139-1378**	6	BEARING	
	18	2	**147-2577**	3	DETENT AS (CONTROL LEVER)	
					(EACH INCLUDES)	
		2	**186-3735**	2	PIN-CONNECTOR (16-GA TO 18-GA)	
		2	**1S-9593**	2	STRAP-CABLE	
		2	**102-8802**	1	KIT-RECEPTACLE (2-PIN)	
					(INCLUDES RECEPTACLE AS AND WEDGE)	
	19	1	**149-3949**	3	LEVER-CONTROL	
	20	2	**150-6287**	2	SPACER (6.22X9.52X31-MM THK)	
	21	1	**170-0970**	1	CUSHION AS	
	22	1	**170-1821**	1	SWITCH AS-PUSH BUTTON (HORN)	
		1	**186-3735**	2	PIN-CONNECTOR (16-GA TO 18-GA)	
		1	**6F-0253**	1	LOCKWASHER	
		1	**172-3511**	1	NUT (5/8-24-THD)	
	23	1	**170-7096**	1	GUARD AS	
	24	1	**185-3521**	1	BRACKET	
	25	1	**185-3522**	1	COVER AS	
		1	**6F-0698**	2	DOWEL	
	26	1	**185-3523**	1	GUARD	
	27	1	**188-3983**	1	SWITCH AS-PUSH BUTTON (THROTTLE LOCK RESUME)	
		1	**186-3736**	3	SOCKET-CONNECTOR (16-GA TO 18-GA)	
		1	**3K-0835**	1	NUT (5/8-24-THD)	
		1	**6F-0253**	1	LOCKWASHER	
		1	**155-2260**	1	KIT-CONNECTING PLUG (3-PIN)	
					(INCLUDES PLUG AS AND WEDGE)	
	28	1	**188-3984**	1	SWITCH AS-PUSH BUTTON (THROTTLE LOCK SET)	
		1	**3E-3371**	1	WEDGE-RECEPTACLE LOCK (3-PIN)	
		1	**186-3735**	3	PIN-CONNECTOR (16-GA TO 18-GA)	
		1	**102-8803**	1	KIT-RECEPTACLE (3-PIN)	
					(INCLUDES RECEPTACLE AS AND WEDGE)	
		1	**3K-0835**	1	NUT (5/8-24-THD)	
		1	**6F-0253**	1	LOCKWASHER	
	29	2	**208-2479**	2	SPACER (10X13.1X5.5-MM THK)	
	30	1	**233-1666**	1	FILM-CONTROL (IMPLEMENT CONTROLS POD)	
	31	1	**233-6045**	1	SWITCH AS-ROCKER (HYDRAULIC LOCKOUT)	
	32	1	**163-8119**	3	SPRING	
Y	33	1	**214-4862**	3	SENSOR GP-POSITION (CONTROL LEVER)	416
	34	1	**2M-4009**	1	PLUG-BUTTON	

OPERATOR STATION

227-0966 CONTROL GP-ELECTROHYDRAULIC *(contd.)* i02618402

NOTE	REF NO	GRAPHIC REF	PART NUMBER	QTY	PART NAME 1 2 3 4 5 6 (PRODUCT LEVEL)	SEE PAGE
	35	2	**102-8802**	1	KIT-RECEPTACLE (2-PIN)	
					(INCLUDES RECEPTACLE AS AND WEDGE)	
M	36	2	**3E-8020**	1	SCREW-TRUSS HEAD (M6X1X25-MM)	
M	37	2	**5C-2890**	1	NUT (M6X1-THD)	
M	38	2	**6V-7357**	3	BOLT (M6X1X25-MM)	
M	39	1,2	**6V-7743**	4	LOCKNUT (M6X1-THD)	
	40	2	**8M-2771**	2	CLIP	
M	41	1,2	**8T-4970**	8	BOLT (M6X1X14-MM)	
M	42	2	**8T-4971**	1	BOLT (M6X1X30-MM)	
	43	2	**9X-2026**	9	WASHER (6.5X17X1-MM THK)	
M	44	1	**9X-2042**	8	SCREW-TRUSS HEAD (M6X1X12-MM)	
M	45	1	**9X-2044**	3	SCREW-TRUSS HEAD (M6X1X16-MM)	

M-METRIC PART
Y-SEPARATE ILLUSTRATION

227-0966 **CONTROL GP-ELECTROHYDRAULIC** *(contd.)* **i02618402**

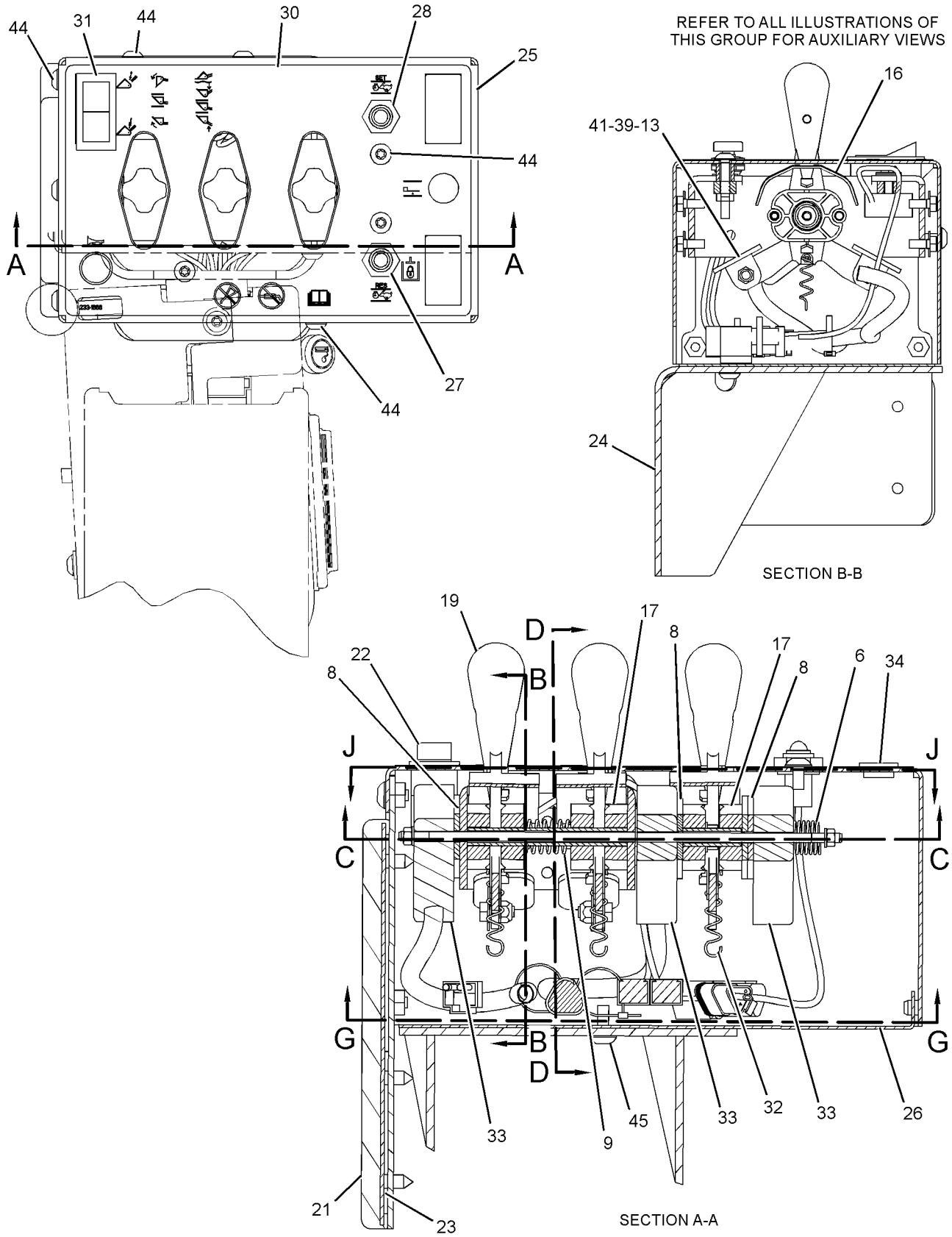

GRAPHIC #1 g01229407

227-0966 **CONTROL GP-ELECTROHYDRAULIC** *(contd.)* **i02618402**

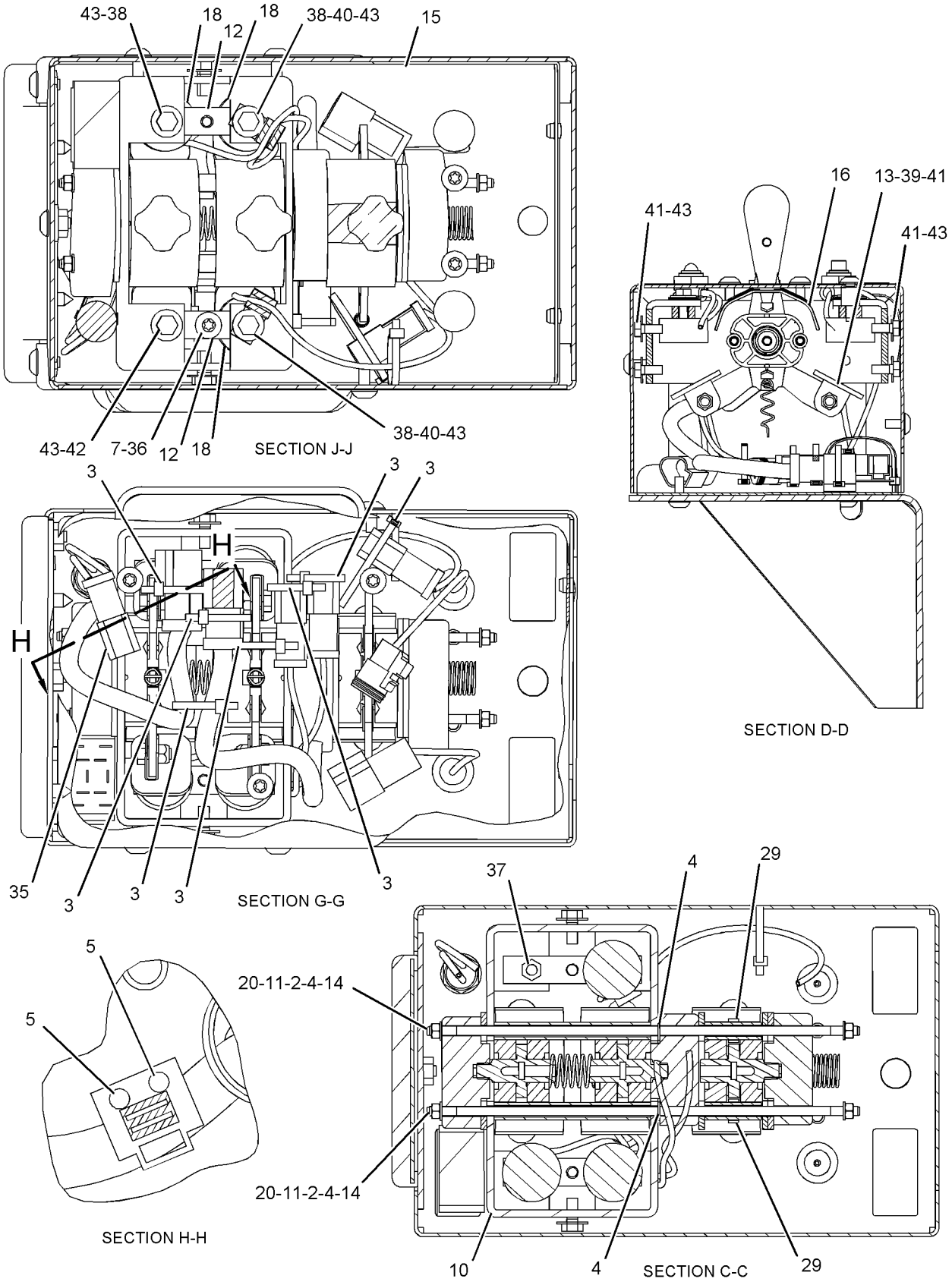

GRAPHIC #2 **<END>** g01341086

OPERATOR STATION

228-0918 CONTROL GP-ELECTROHYDRAULIC—2-FUNCTION

S/N: BXY1-UP

PART OF 255-0040, 255-0042, 298-6962, 298-6964 LIFT AR

AN ATTACHMENT

SMCS-5702 **i02616341**

NOTE	REF NO	GRAPHIC REF	PART NUMBER	QTY	PART NAME 1 2 3 4 5 6 (PRODUCT LEVEL)	SEE PAGE
M	2	2	**5C-2874**	4	NUT (M5X0.8-THD)	
	3	2	**8L-8413**	10	STRAP-CABLE	
	4	2	**8T-0328**	8	WASHER-HARD (5.5X10X1-MM THK)	
M	5	1,2	**9X-2042**	10	SCREW-TRUSS HEAD (M6X1X12-MM)	
	6	2	**105-3372**	1	SPRING	
	7	2	**106-1582**	1	HOUSING	
	8	2	**106-1583**	2	ROD	
	9	2	**106-1584**	2	SPACER (6.22X9.52X85-MM THK)	
	10	2	**114-4244**	2	PLATE	
	11	2	**114-4247**	4	BRACKET AS	
	12	2	**133-7215**	2	DEFLECTOR	
	13	2	**139-1378**	4	BEARING	
	14	2	**147-2577**	3	DETENT AS (CONTROL LEVER)	
					(EACH INCLUDES)	
		2	**1S-9593**	2	STRAP-CABLE	
		2	**186-3735**	2	PIN-CONNECTOR (16-GA TO 18-GA)	
		2	**102-8802**	1	KIT-RECEPTACLE (2-PIN)	
					(INCLUDES RECEPTACLE AS AND WEDGE)	
	15	2	**149-3949**	2	LEVER-CONTROL	
	16	2	**163-8119**	2	SPRING	
	17	1	**166-4804**	1	COVER AS	
	18	1	**166-4805**	1	GUARD AS	
	19	1	**170-0970**	1	CUSHION AS	
	20	1	**170-0980**	1	BRACKET	
	21	1	**170-1821**	1	SWITCH AS-PUSH BUTTON (HORN)	
		1	**6F-0253**	1	LOCKWASHER	
		1	**186-3735**	2	PIN-CONNECTOR (16-GA TO 18-GA)	
		1	**172-3511**	1	NUT (5/8-24-THD)	
	22	1	**170-7096**	1	GUARD AS	
	23	2	**171-1055**	1	BRACKET AS	
	24	2	**171-1147**	1	FILM-CONTROL (IMPLEMENT CONTROLS POD)	
	25	1	**188-3983**	1	SWITCH AS-PUSH BUTTON (THROTTLE LOCK RESUME)	
		1	**3K-0835**	1	NUT (5/8-24-THD)	
		1	**6F-0253**	1	LOCKWASHER	
		1	**155-2260**	1	KIT-CONNECTING PLUG (3-PIN)	
					(INCLUDES PLUG AS AND WEDGE)	
		1	**186-3736**	3	SOCKET-CONNECTOR (16-GA TO 18-GA)	
	26	2	**188-3984**	1	SWITCH AS-PUSH BUTTON (THROTTLE LOCK SET)	
		2	**3E-3371**	1	WEDGE-RECEPTACLE LOCK (3-PIN)	
		2	**102-8803**	1	KIT-RECEPTACLE (3-PIN)	
					(INCLUDES RECEPTACLE AS AND WEDGE)	
		2	**3K-0835**	1	NUT (5/8-24-THD)	
		2	**6F-0253**	1	LOCKWASHER	
		2	**186-3735**	3	PIN-CONNECTOR (16-GA TO 18-GA)	
Y	27	2	**214-4862**	2	SENSOR GP-POSITION (CONTROL LEVER)	416
	28	2	**2M-4009**	1	PLUG-BUTTON	
	29	2	**102-8802**	1	KIT-RECEPTACLE (2-PIN)	
					(INCLUDES RECEPTACLE AS AND WEDGE)	
M	30	2	**5C-2890**	1	NUT (M6X1-THD)	
M	31	2	**6V-7357**	3	BOLT (M6X1X25-MM)	
M	32	2	**6V-7743**	4	LOCKNUT (M6X1-THD)	
	33	2	**8M-2771**	2	CLIP	
M	34	2	**8T-4970**	8	BOLT (M6X1X14-MM)	
M	35	2	**8T-4971**	1	BOLT (M6X1X30-MM)	
	36	2	**9X-2026**	9	WASHER (6.5X17X1-MM THK)	

228-0918 **CONTROL GP-ELECTROHYDRAULIC** *(contd.)* **i02616341**

NOTE	REF NO	GRAPHIC REF	PART NUMBER	QTY	PART NAME 1 2 3 4 5 6 (PRODUCT LEVEL)	SEE PAGE
M	37	2	**9X-2044**	4	SCREW-TRUSS HEAD (M6X1X16-MM)	

M-METRIC PART
Y-SEPARATE ILLUSTRATION

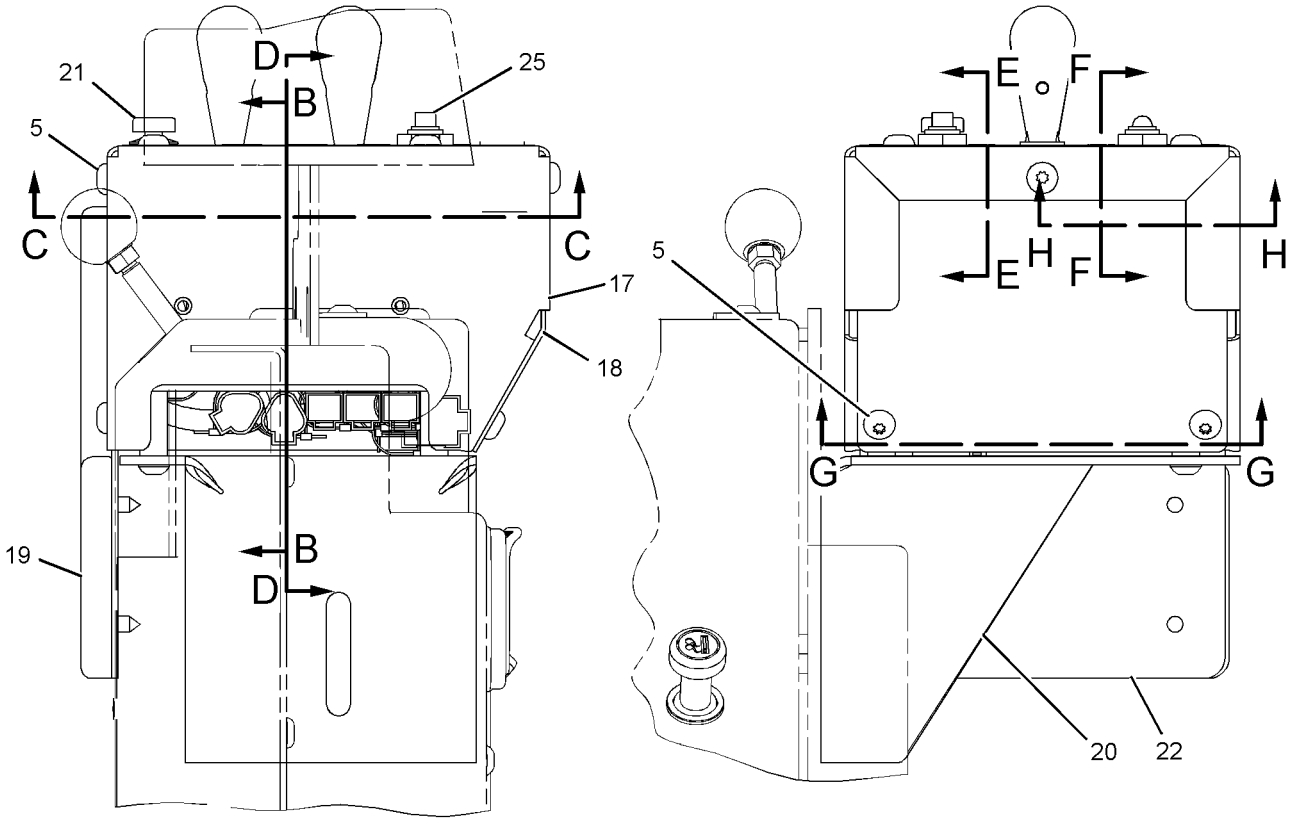

GRAPHIC #1 g01128212

228-0918 **CONTROL GP-ELECTROHYDRAULIC** *(contd.)* **i02616341**

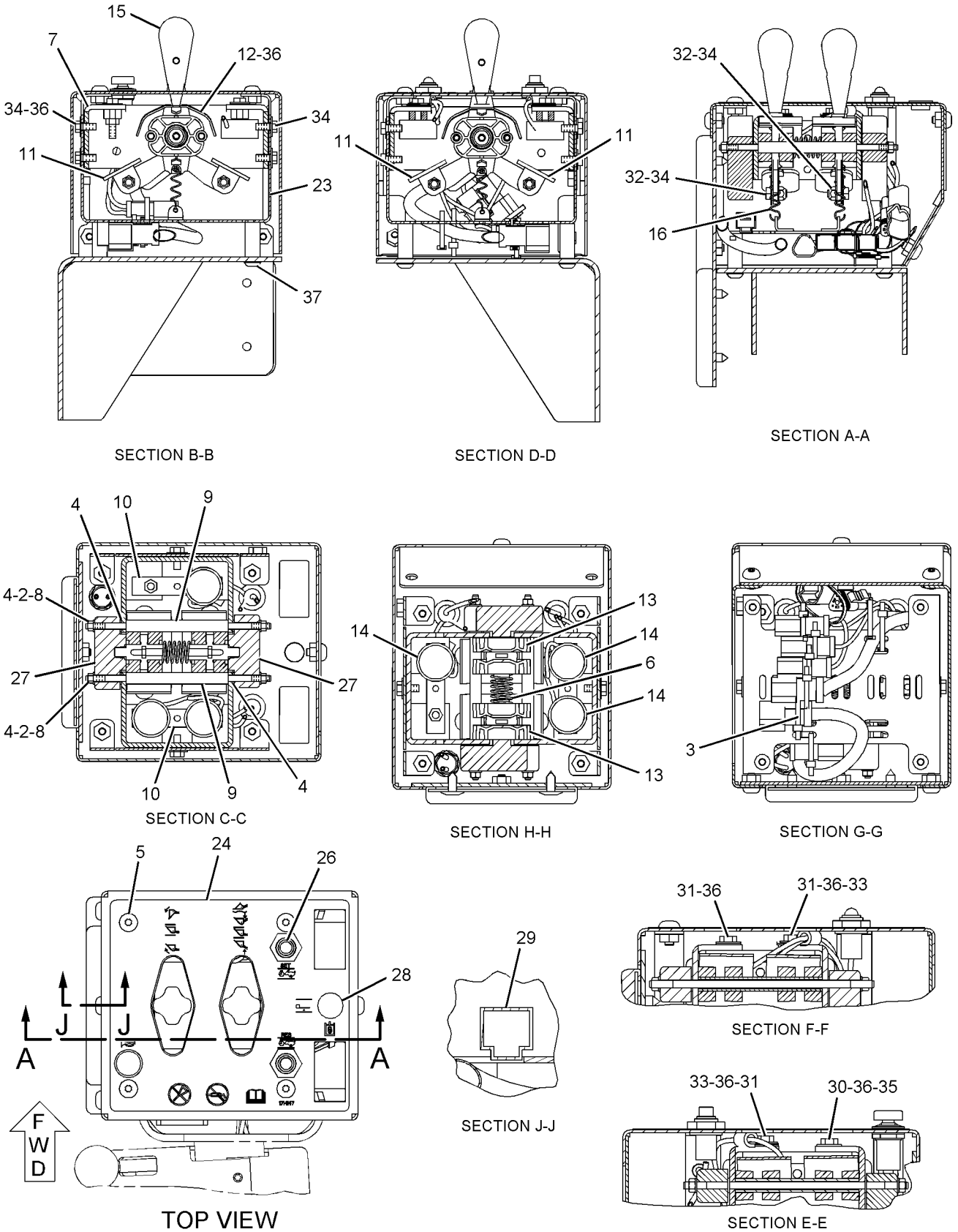

GRAPHIC #2 **<END>** g01128606

OPERATOR STATION

326-3191 CONTROL GP-ELECTROHYDRAULIC—2-FUNCTION

S/N: BXY4000-UP
PART OF 298-6962, 298-6964 LIFT AR
AN ATTACHMENT

SMCS-5702 **i03760797**

NOTE	REF NO	GRAPHIC REF	PART NUMBER	QTY	PART NAME 1 2 3 4 5 6 (PRODUCT LEVEL)	SEE PAGE
	1	1	**4E-8722**	4	NUT (RETAINER)	
	2	1	**140-5945**	1	FILM-IDENTIFICATION (HORN)	
	3	1	**189-2077**	1	FILM-CONTROL (LIFT, FLOAT, LOWER)	
	4	1	**189-2078**	1	FILM-CONTROL (DUMP, TILT BACK)	
	5	1	**189-2079**	1	FILM-INSTRUCTION (MAINTENANCE)	
	6	1	**245-6447**	1	CUSHION AS	
	7	1	**247-4969**	1	PLATE	
	8	1	**262-5236**	1	COVER	
	9	1	**262-5239**	1	HOUSING AS	
	10	1	**262-5240**	1	PLATE AS	
	11	1	**268-6497**	1	FILM-IDENTIFICATION (PAYLOAD STORE)	
	12	1	**272-9896**	1	FILM-CONTROL (THROTTLE LOCK SET)	
	13	1	**272-9897**	1	FILM-CONTROL (THROTTLE LOCK RESUME)	
M	14	1	**6R-7653**	2	SCREW (M6X1X15-MM)	
	15	1	**8T-4205**	2	WASHER-HARD (7.2X14.5X2-MM THK)	
M	16	1	**8T-4970**	2	BOLT (M6X1X14-MM)	
	17	1	**9X-2038**	4	WASHER (7X19X2-MM THK)	
M	18	1	**9X-2044**	17	SCREW-TRUSS HEAD (M6X1X16-MM)	
M	19	1	**9X-2045**	4	SCREW-TRUSS HEAD (M6X1X20-MM)	
D	20	1	**6V-3987**		SEAL (0.07-M EACH)	

D-ORDER BY THE METER
M-METRIC PART

326-3191 **CONTROL GP-ELECTROHYDRAULIC** *(contd.)* **i03760797**

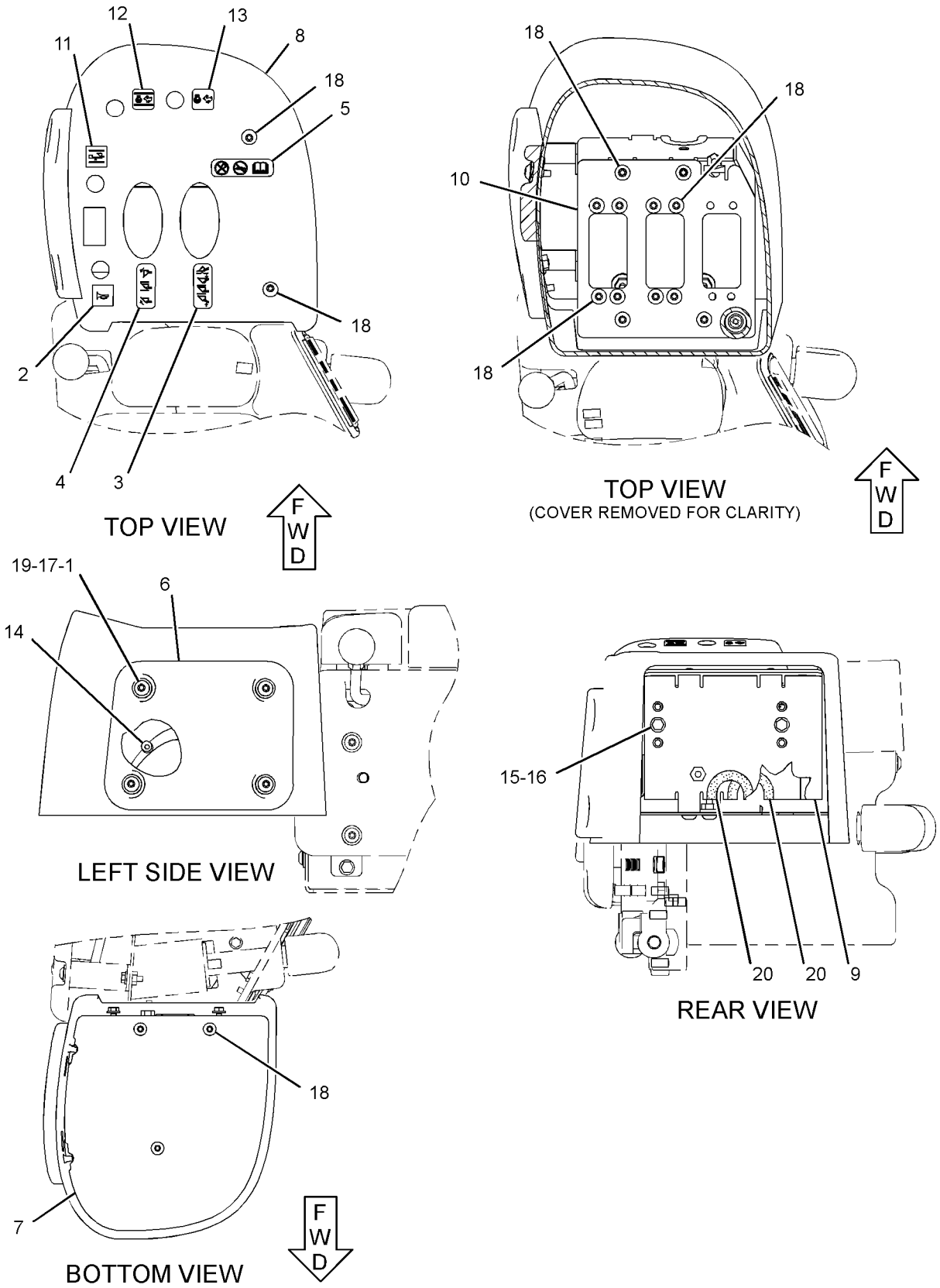

GRAPHIC #1 **<END>** g02034456

OPERATOR STATION

326-3193 CONTROL GP-ELECTROHYDRAULIC

S/N: BXY4000-UP
PART OF 298-6963, 298-6965 LIFT AR
AN ATTACHMENT

SMCS-5702 **i03765170**

NOTE	REF NO	GRAPHIC REF	PART NUMBER	QTY	PART NAME 1 2 3 4 5 6 (PRODUCT LEVEL)	SEE PAGE
	1	1	**4E-8722**	4	NUT (RETAINER)	
	2	1	**140-5945**	1	FILM-IDENTIFICATION (HORN)	
	3	1	**189-2077**	1	FILM-CONTROL (LIFT, FLOAT, LOWER)	
	4	1	**189-2078**	1	FILM-CONTROL (DUMP, TILT BACK)	
	5	1	**189-2079**	1	FILM-INSTRUCTION (MAINTENANCE)	
	6	1	**201-5563**	1	FILM-IDENTIFICATION (AUXILIARY HYDRAULIC)	
	7	1	**245-6447**	1	CUSHION AS	
	8	1	**247-4969**	1	PLATE	
	9	1	**262-5237**	1	COVER	
	10	1	**262-5239**	1	HOUSING AS	
	11	1	**262-5240**	1	PLATE AS	
	12	1	**268-6497**	1	FILM-IDENTIFICATION (PAYLOAD STORE)	
	13	1	**272-9896**	1	FILM-CONTROL (THROTTLE LOCK SET)	
	14	1	**272-9897**	1	FILM-CONTROL (THROTTLE LOCK RESUME)	
Y	15	1	**307-4671**	1	CONTROL GP-HANDLE	1720
M	16	1	**6R-7653**	2	SCREW (M6X1X15-MM)	
	17	1	**8T-4205**	2	WASHER-HARD (7.2X14.5X2-MM THK)	
M	18	1	**8T-4970**	2	BOLT (M6X1X14-MM)	
	19	1	**9X-2038**	4	WASHER (7X19X2-MM THK)	
M	20	1	**9X-2044**	21	SCREW-TRUSS HEAD (M6X1X16-MM)	
M	21	1	**9X-2045**	4	SCREW-TRUSS HEAD (M6X1X20-MM)	
D	22	1	**6V-3987**		SEAL (0.07-M EACH)	

D-ORDER BY THE METER
M-METRIC PART
Y-SEPARATE ILLUSTRATION

326-3193 **CONTROL GP-ELECTROHYDRAULIC** *(contd.)* **i03765170**

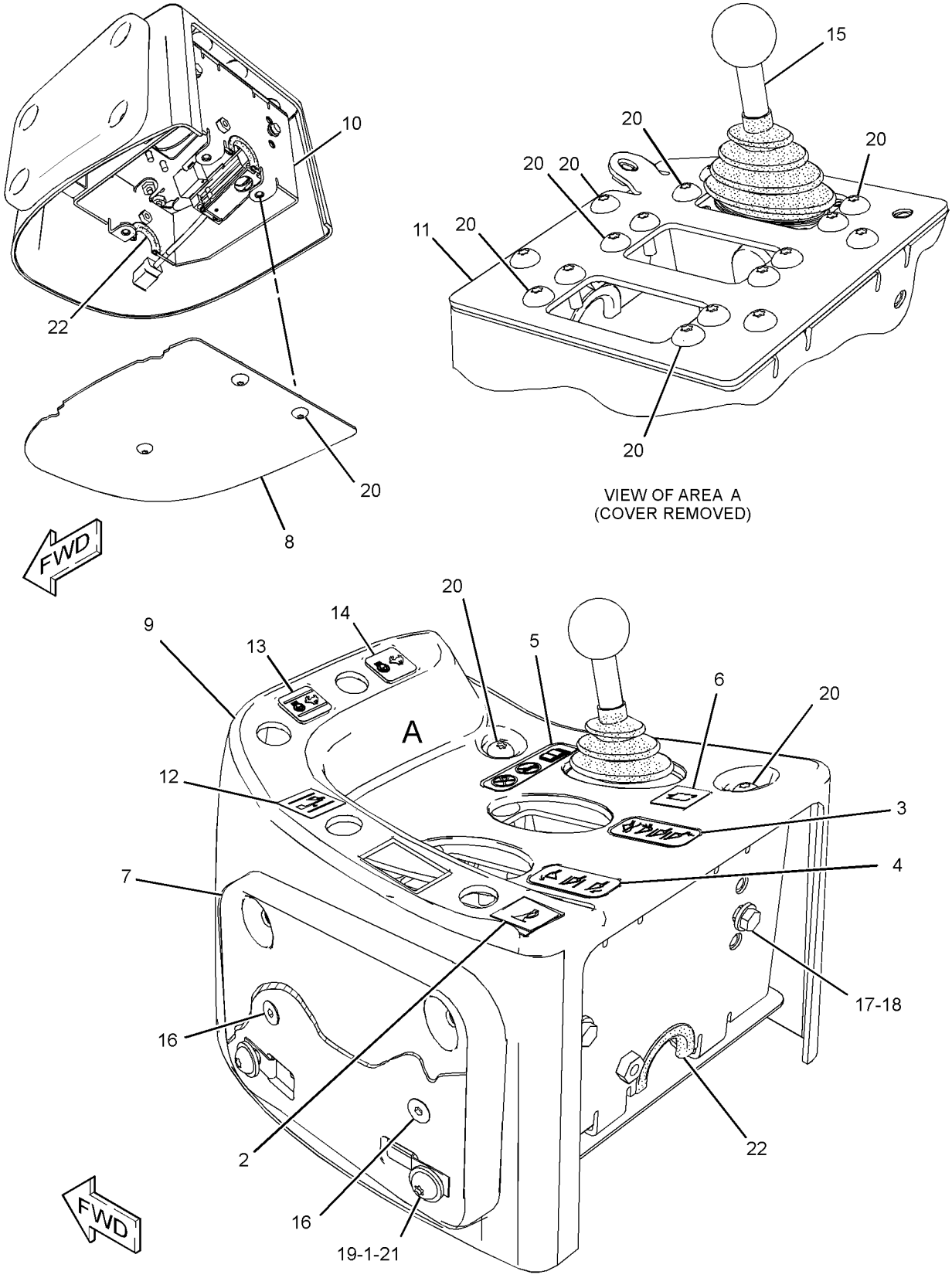

GRAPHIC #1 **<END>** g02035077

OPERATOR STATION

307-4671 CONTROL GP-HANDLE–BUCKET

S/N: BXY4000-UP

PART OF 326-3193 CONTROL GP-ELECTROHYDRAULIC, 345-4460 WIRING GP-CAB

ALSO AN ATTACHMENT

SMCS-5063, 5705 **i02735065**

NOTE	REF NO	GRAPHIC REF	PART NUMBER	QTY	PART NAME 1 2 3 4 5 6 (PRODUCT LEVEL)	SEE PAGE
	1	1	**151-9274**	1	KIT-RECEPTACLE (4-PIN)	
					(INCLUDES RECEPTACLE AS & WEDGE)	
	2	1	**278-8974**	1	KNOB	
	3	1	**278-8965**	1	BOOT	
	4	1	**278-8967**	1	RETAINER-BOOT	
M	5	1	**278-8970**	4	SCREW (M3X10X6-MM)	

M-METRIC PART

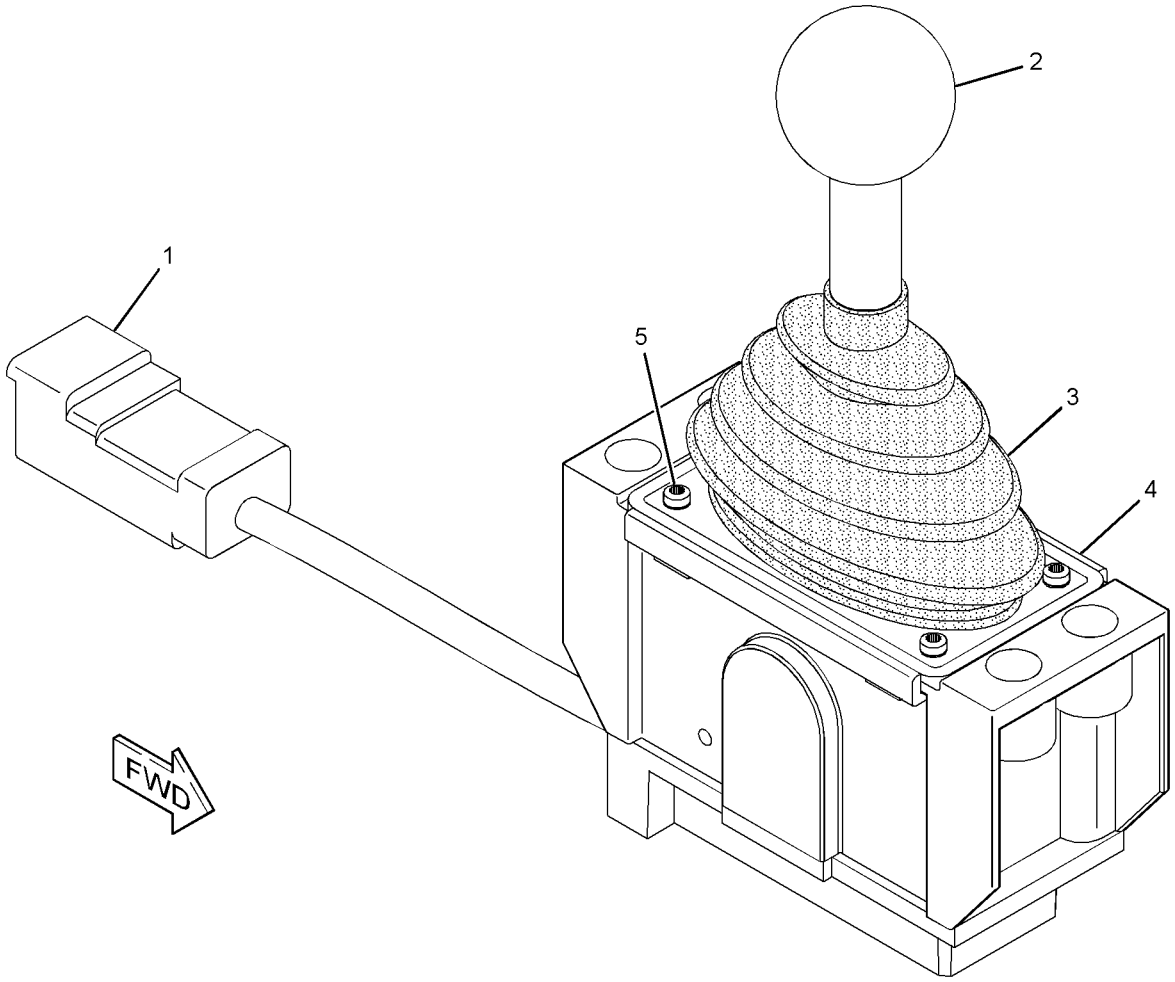

GRAPHIC #1 **<END>** g01352836

OPERATOR STATION

103-5526 CONTROL GP-MONITOR—BACKLIGHT DIMMER

S/N: BXY1-UP

PART OF 261-0400, 345-4460 WIRING GP-CAB

ALSO AN ATTACHMENT

SMCS-7490, 7494, 7601 **i02271420**

NOTE	REF NO	GRAPHIC REF	PART NUMBER	QTY	PART NAME 1 2 3 4 5 6 (PRODUCT LEVEL)	SEE PAGE
	1	1	**5P-9132**	2	SCREW-HEX FLANGE (6-32X0.187-IN)	
	2	1	**186-3735**	6	PIN-CONNECTOR (16-GA TO 18-GA)	
					AVAILABLE REPAIR KIT(S):	
			102-8805	1	KIT-RECEPTACLE (6-PIN)	
					(INCLUDES RECEPTACLE AS & WEDGE)	

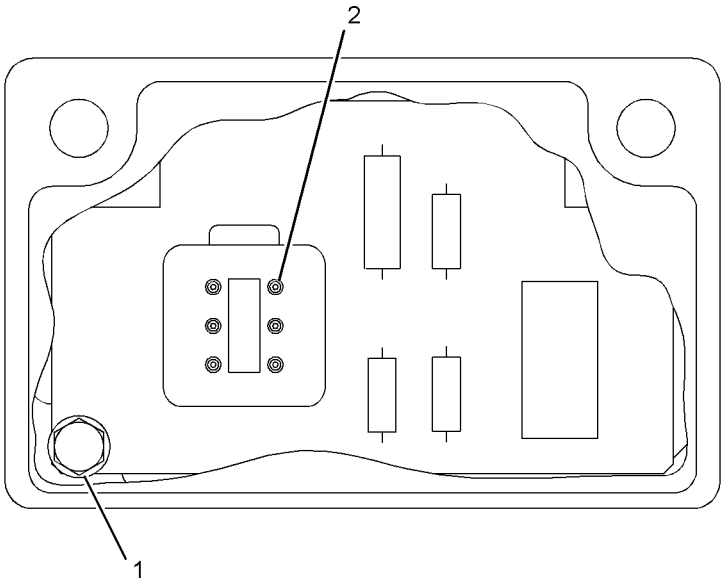

GRAPHIC #1 **<END>** g01126720

OPERATOR STATION

228-6563 CONTROL GP-MONITOR—PAYLOAD

S/N: BXY1-1241
PART OF 155-6649 MONITOR GP-PAYLOAD
AN ATTACHMENT

SMCS-7490, 7494, 7601 **i02135547**

NOTE	REF NO	GRAPHIC REF	PART NUMBER	QTY	PART NAME 1 2 3 4 5 6 (PRODUCT LEVEL)	SEE PAGE
Z	1	1		1	CONTROL AS-ELECTRONIC	
	2	1	**228-6562**	1	SOFTWARE GP-MONITOR (PAYLOAD CONTROL)	
	3	1	**8C-3078**	1	SEAL-O-RING	
	4	1	**129-9690**	1	COVER	
	5	1	**101-1785**	1	BATTERY (LITHIUM)	

Z-NOT SERVICED SEPARATELY

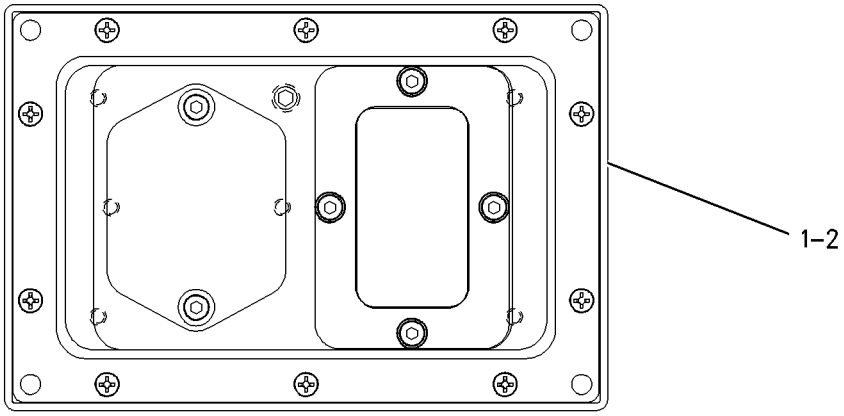

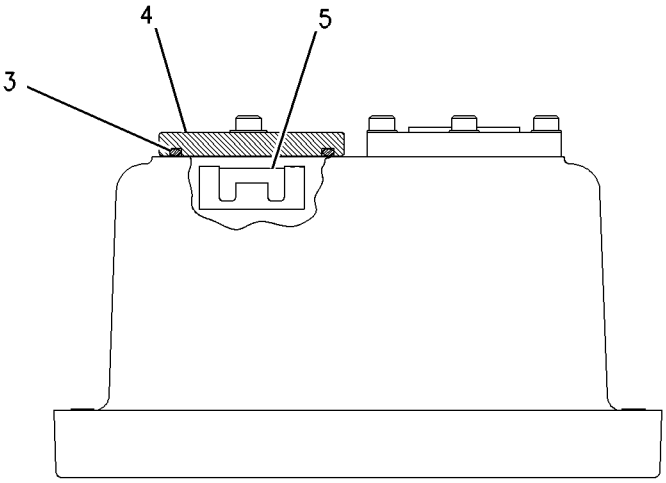

GRAPHIC #1 **<END>** g00845134

OPERATOR STATION

283-1604 CONTROL GP-MONITOR—PAYLOAD

S/N: BXY1242-UP
PART OF 155-6649 MONITOR GP-PAYLOAD
AN ATTACHMENT

SMCS-7490, 7494, 7601 **i02473973**

NOTE	REF NO	GRAPHIC REF	PART NUMBER	QTY	PART NAME 1 2 3 4 5 6 (PRODUCT LEVEL)	SEE PAGE
Z	1	1			CONTROL AS-ELECTRONIC	
	2	1	**283-1603**	1	SOFTWARE GP-MONITOR (PAYLOAD CONTROL SYSTEM)	
	3	1	**8C-3078**	1	SEAL-O-RING	
	4	1	**129-9690**	1	COVER	
	5	1	**101-1785**	1	BATTERY (LITHIUM)	

Z-NOT SERVICED SEPARATELY

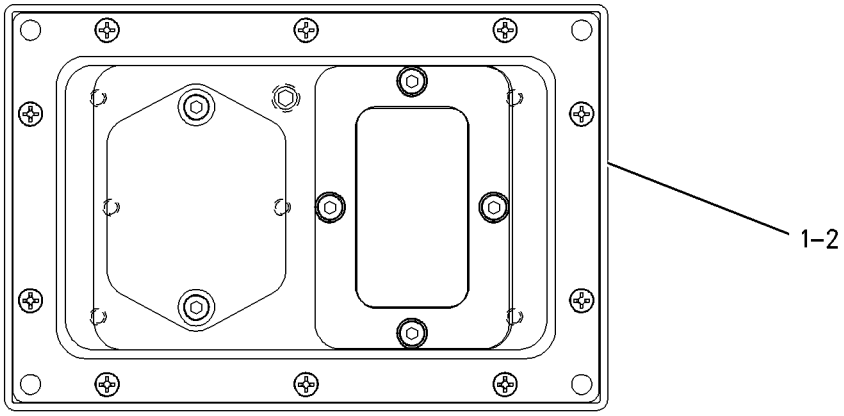

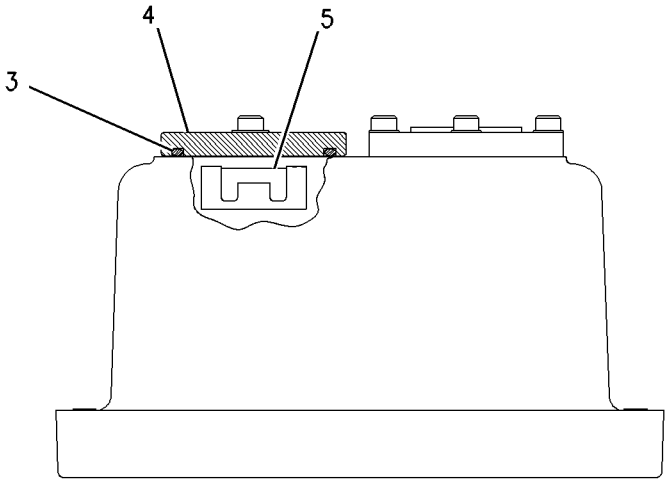

GRAPHIC #1 **<END>** g00845134

OPERATOR STATION

141-4940 CONTROL GP-STEERING—STIC

S/N: BXY1-UP

PART OF 227-3190, 292-6110, 308-2727, 346-3826 CAB AR

ALSO AN ATTACHMENT

SMCS-4310, 4338, 4343 **i03373764**

NOTE	REF NO	GRAPHIC REF	PART NUMBER	QTY	PART NAME 1 2 3 4 5 6 (PRODUCT LEVEL)	SEE PAGE
	1	1	**3S-2093**	3	STRAP-CABLE	
	2	1	**5K-1094**	4	LOCKWASHER	
	3	1	**7K-1181**	1	STRAP-CABLE	
M	4	1	**105-3477**	1	BOLT-SOCKET HEAD (M10X1.5X45-MM)	
	5	1	**141-4936**	1	PAD	
	6	1	**151-2094**	1	HARNESS AS-STEERING (STIC CONTROL)	
		1	**102-8801**	1	KIT-RECEPTACLE (12-PIN)	
					(INCLUDES RECEPTACLE AS & WEDGE)	
		1	**155-2265**	1	KIT-CONNECTING PLUG (8-PIN)	
		1	**155-2271**	1	KIT-CONNECTING PLUG (4-PIN)	
					(EACH KIT-CONNECTING PLUG INCLUDES PLUG AS & WEDGE)	
		1	**8T-8737**	2	PLUG-SEAL	
	7	1	**155-6563**	1	PLATE	
	8	1	**163-5646**	1	PLATE AS	
M		1	**8T-3490**	3	NUT-WELD (M10X1.5-THD)	
	9	1	**163-5647**	1	GASKET	
	10	1	**163-8811**	8	CLAMP	
I	11	1	**180-2595**	2	HOSE AS	
I	12	1	**180-2596**	2	HOSE AS	
	13	1	**180-9971**	2	TUBE AS	
	14	1	**180-9972**	2	TUBE AS	
	15	1	**187-1867**	1	PLATE	
Y	16	1	**249-5615**	1	VALVE GP-PILOT (STIC STEERING)	1380
	17	1	**136-3607**	2	ELBOW	
	18	1	*148-8375*	2	ELBOW AS	
					(EACH INCLUDES)	
		1	**6V-8981**	1	ELBOW	
		1	**6V-8398**	2	SEAL-O-RING	
	19	1	*148-8457*	2	UNION AS	
					(EACH INCLUDES)	
		1	**6V-8995**	1	UNION	
		1	**6V-8398**	2	SEAL-O-RING	
	20	1	**3K-0360**	4	SEAL-O-RING	
	21	1	**6D-4247**	2	CLIP	
	22	1	**6V-8398**	12	SEAL-O-RING	
	23	1	**6V-8639**	2	CONNECTOR	
	24	1	**6V-8988**	4	ELBOW	
	25	1	**6V-9169**	8	NUT-BULKHEAD (13/16-16-THD)	
	26	1	**8T-4121**	9	WASHER-HARD (11X21X2.5-MM THK)	
	27	1	**8T-4123**	2	WASHER (22X35X3.5-MM THK)	
M	28	1	**8T-4136**	2	BOLT (M10X1.5X25-MM)	
M	29	1	**8T-4185**	2	BOLT (M10X1.5X50-MM)	
G	30	1	**160-2243**		SLEEVE-ABRASION (6.7-INCH)	
G	30A	1	**160-2243**		SLEEVE-ABRASION (7.1-INCH)	
M	31	1	**8T-4137**	4	BOLT (M10X1.5X20-MM)	

G-ORDER BY THE INCH
I-REFER TO HYDRAULIC INFORMATION SYSTEM
M-METRIC PART
Y-SEPARATE ILLUSTRATION

141-4940 **CONTROL GP-STEERING** *(contd.)* **i03373764**

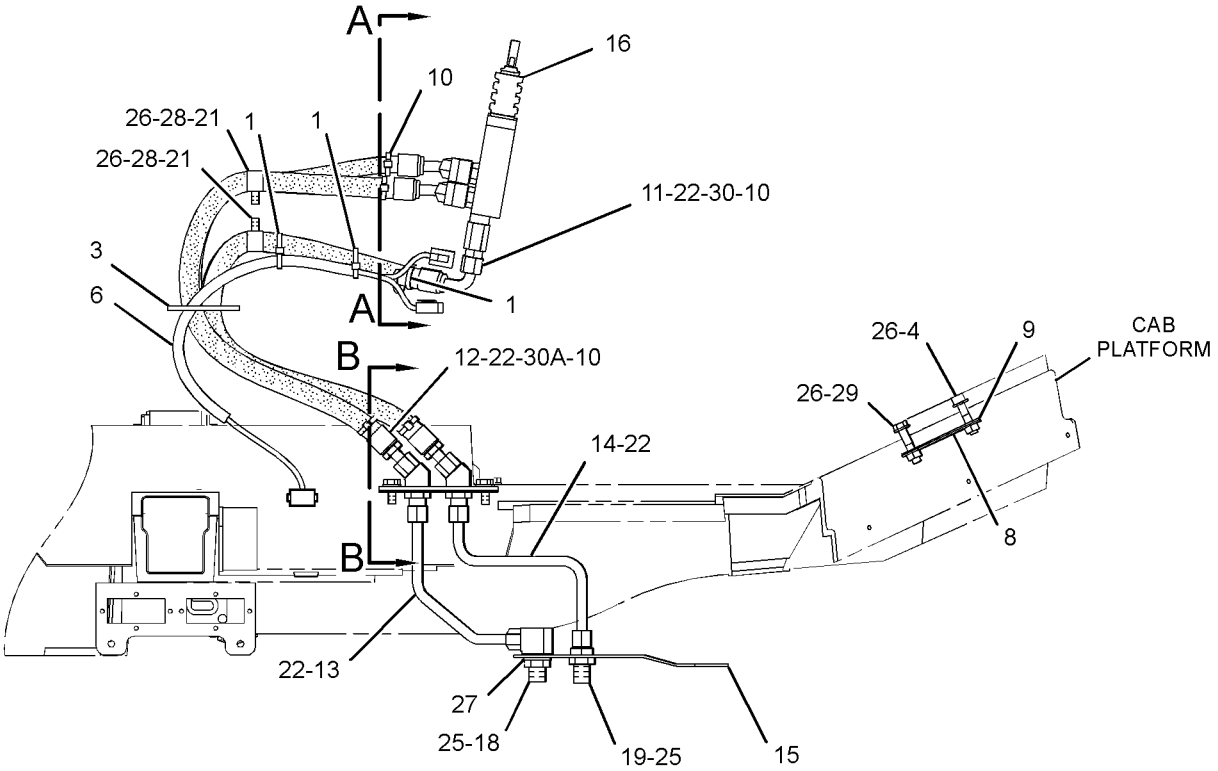

RIGHT SIDE VIEW

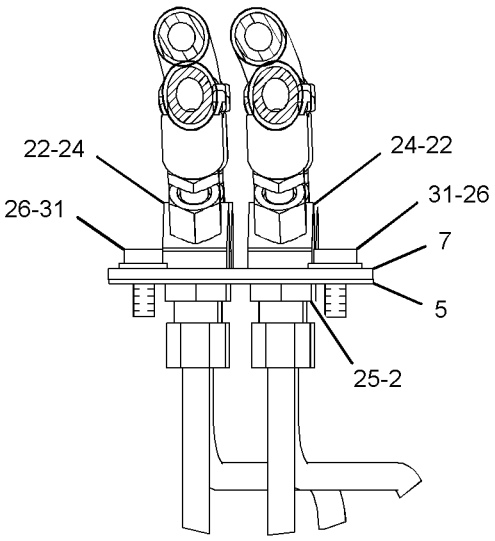

SECTION B-B

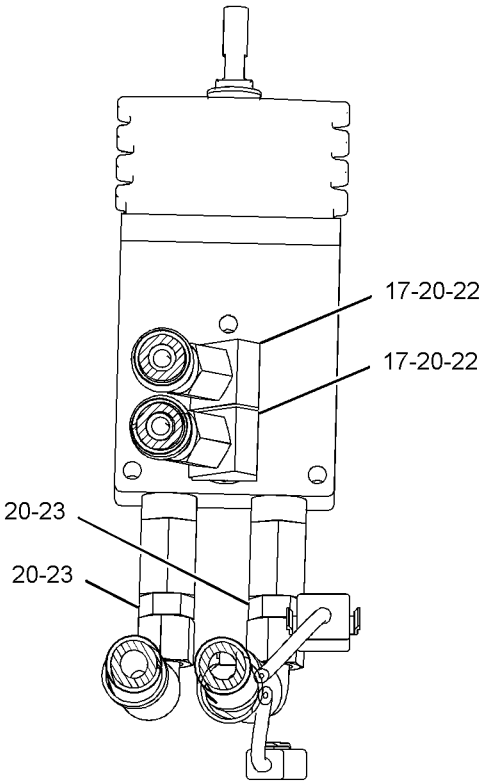

SECTION A-A

GRAPHIC #1 **<END>** g01859014

OPERATOR STATION

4E-8413 CONTROL GP-STIC

S/N: BXY1-UP

PART OF 227-3190, 292-6110, 308-2727, 346-3826 CAB AR

ALSO AN ATTACHMENT

SMCS-3033 **i02364975**

NOTE	REF NO	GRAPHIC REF	PART NUMBER	QTY	PART NAME 1 2 3 4 5 6 (PRODUCT LEVEL)	SEE PAGE
	1	1	**4E-7520**	1	BASE	
	2	1	**4E-7627**	1	HOUSING	
	3	1	**4E-7628**	1	COVER	
Y	4	1	**177-4113**	1	CONTROL GP-STIC	1727
M	5	1	**6V-7687**	1	LOCKNUT (M12X1.75-THD)	
M	6	1	**8T-0269**	4	BOLT-SOCKET HEAD (M6X1X20-MM)	
M	7	1	**8T-0723**	2	SETSCREW-SOCKET	
M	8	1	**8T-4138**	4	BOLT (M6X1X20-MM)	

M-METRIC PART
Y-SEPARATE ILLUSTRATION

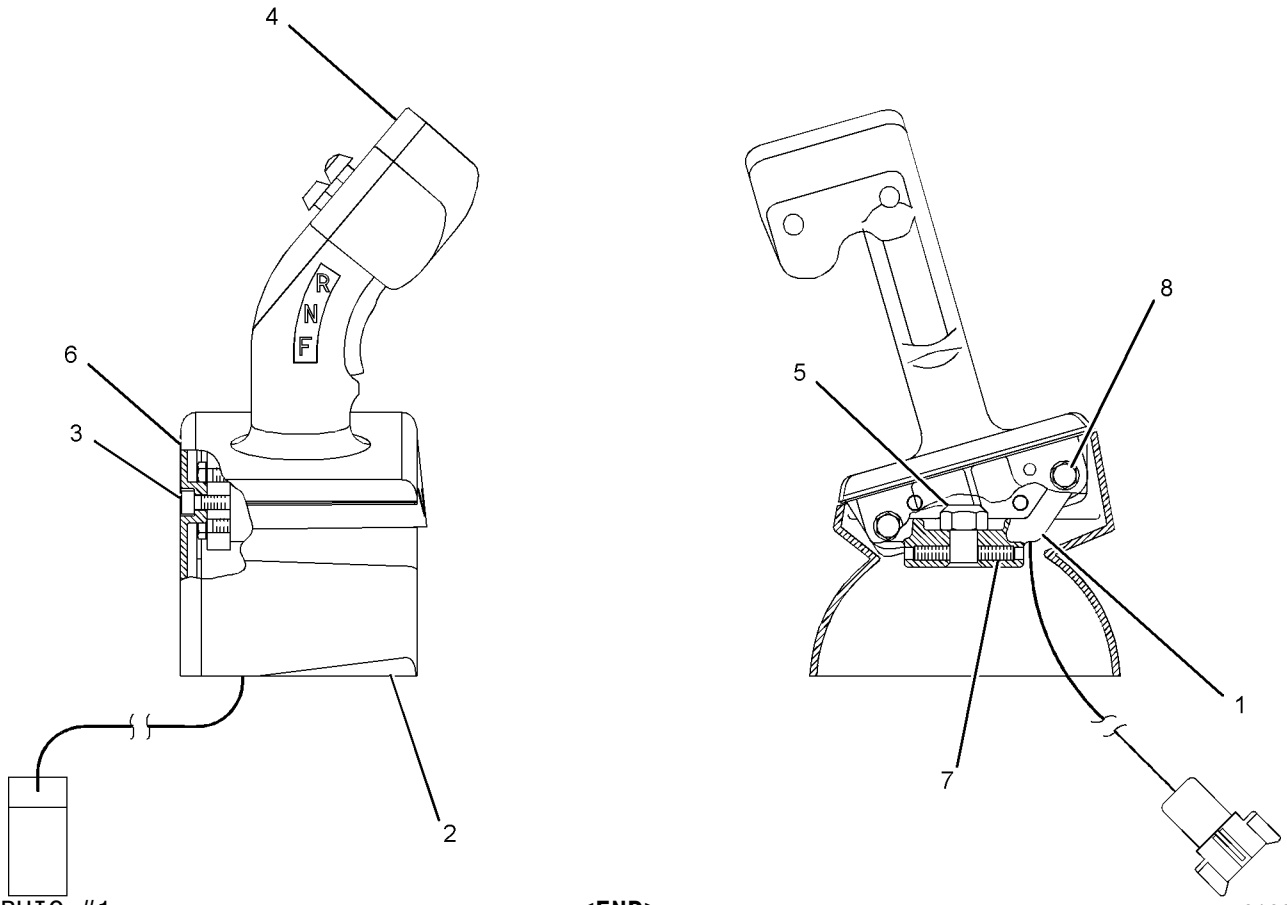

GRAPHIC #1

<END>

g01033706

OPERATOR STATION

177-4113 CONTROL GP-STIC

S/N: BXY1-UP
PART OF 4E-8413 CONTROL GP-STIC
ALSO AN ATTACHMENT

SMCS-3033 **i03413045**

NOTE	REF NO	GRAPHIC REF	PART NUMBER	QTY	PART NAME 1 2 3 4 5 6 (PRODUCT LEVEL)	SEE PAGE
	1	1	**160-3518**	1	KIT-RECEPTACLE (8-PIN)	
					(INCLUDES RECEPTACLE AS AND WEDGE)	
	2	1	**177-4112**	1	SWITCH GP-TRANSMISSION	
	2A	1	**177-2374**	1	SWITCH AS-ROCKER (TRANSMISSION DIRECTION)	
		1	**5S-4246**	2	LOCKWASHER	
		1	**8T-8729**	3	PIN-CONNECTOR (16-GA TO 18-GA)	
		1	**9X-8917**	2	SCREW-MACHINE (4-40X9.52-MM)	
		1	**096-5962**	2	WASHER-HARD (3.4X7X0.8-MM THK)	
		1	**105-8029**	1	ACTUATOR	
	2B	1	**159-8664**	1	SWITCH AS (TRANSMISSION UPSHIFT)	
	2C	1	**159-8665**	1	SWITCH AS (TRANSMISSION DOWNSHIFT)	
					(EACH SWITCH AS INCLUDES)	
		1	**3K-0835**	1	NUT (5/8-24-THD)	
		1	**6F-0253**	1	LOCKWASHER	
		1	**8T-8729**	2	PIN-CONNECTOR (16-GA TO 18-GA)	
	3	1	**3E-3389**	1	WEDGE-RECEPTACLE LOCK	
	4	1	**105-9073**	1	GRIP	
M	5	1	**7Y-3173**	2	SCREW-BUTTON HEAD (M4X0.7X12-MM)	
	6	1	**8C-7508**	2	LOCKWASHER	
	7	1	**8C-9660**	2	WASHER (4.6X7.9X0.8-MM THK)	

M-METRIC PART

177-4113 CONTROL GP-STIC *(contd.)* **i03413045**

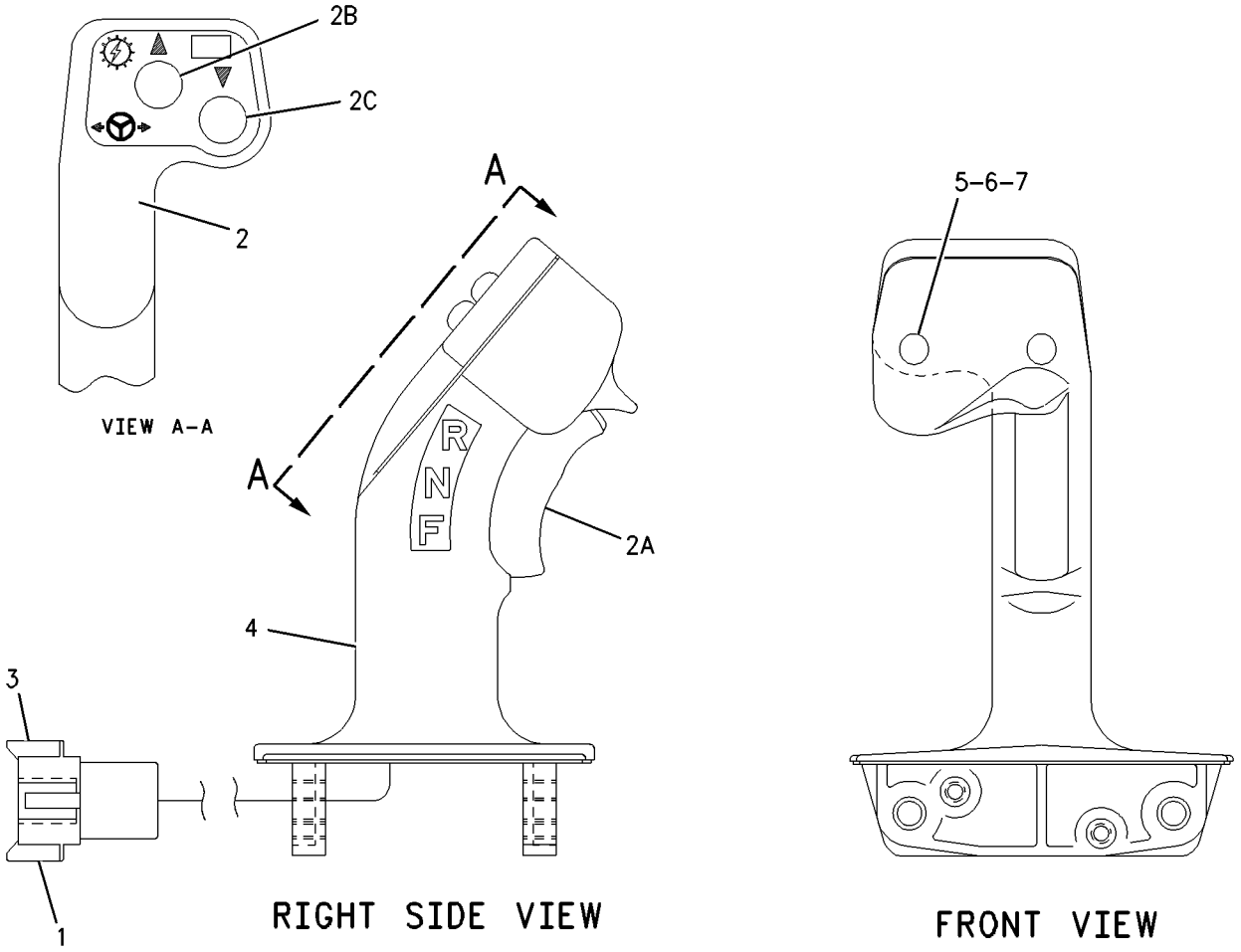

GRAPHIC #1 **<END>** g00898020

OPERATOR STATION

187-0738 CONTROL GP-STIC LOCKOUT

S/N: BXY1-UP

PART OF 227-3190, 292-6110, 308-2727, 346-3826 CAB AR

ALSO AN ATTACHMENT

SMCS-3034 **i02262633**

NOTE	REF NO	GRAPHIC REF	PART NUMBER	QTY	PART NAME 1 2 3 4 5 6 (PRODUCT LEVEL)	SEE PAGE
	1	1	**2V-4387**	1	SPACER (10.312X25.4X23.11-MM THK)	
	2	1	**3S-2093**	1	STRAP-CABLE	
	3	1	**4E-8557**	1	SHAFT AS	
	4	1	**4E-8561**	1	CAM	
	5	1	**188-2048**	1	KNOB	
	6	1	**6L-8598**	2	RING-RETAINING	
	7	1	**8C-3442**	1	SPRING-COIL	
	8	1	**144-7766**	1	LEVER AS-STIC STEER LOCKOUT	
	9	1	**145-8951**	1	PLATE AS	
	10	1	**145-8952**	1	PLATE AS	
M		1	**3E-6908**	2	STUD-WELD (M8X1.25X20-MM)	
	11	1	**151-6427**	2	BEARING	
	12	1	**190-4764**	1	GUARD AS	
M		1	**6V-9632**	1	NUT-WELD (M6X1-THD)	
	13	1	**204-3611**	1	PLATE AS	
M		1	**6V-9632**	4	NUT-WELD (M6X1-THD)	
	14	1	**171-3759**	1	SWITCH GP-LIMIT (STIC CONTROL LOCKOUT)	
		1	**102-8804**	1	KIT-RECEPTACLE (4-PIN)	
					(INCLUDES RECEPTACLE AS & WEDGE)	
		1	**9G-3695**	1	PLUG-SEAL	
		1	**9X-3401**	3	PIN-CONNECTOR (16-GA TO 18-GA)	
BD		1	**6V-1614**		TUBE-HEAT SHRINK (9.52-MM DIA)	
BD		1	**5P-5677**		WIRE (18-GA, BLACK)	
BE		1	**9X-1386**		SLEEVE	
BE		1	**125-7874**		TUBE-HEAT SHRINK (5.72-MM DIA)	
		1	**126-1767**	1	PIN-CONNECTOR (14-GA)	
	15	1	**1P-7326**	2	WASHER (4.32X9.52X1.52-MM THK)	
	16	1	**4D-7794**	1	CLIP	
	17	1	**4E-8560**	2	KEY-SQUARE	
M	18	1	**5C-7261**	2	NUT (M8X1.25-THD)	
M	19	1	**5C-7423**	4	SCREW (M6X1X16-MM)	
M	20	1	**5C-9553**	2	BOLT (M6X1X16-MM)	
M	21	1	**6V-5220**	2	BOLT (M8X1.25X65-MM)	
M	22	1	**6V-9505**	2	SCREW-MACHINE (M3X0.5X25-MM)	
M	23	1	**8T-4133**	3	NUT (M10X1.5-THD)	
M	24	1	**8T-4177**	1	BOLT (M8X1.25X90-MM)	
	25	1	**8T-4224**	6	WASHER-HARD (8.8X16X2-MM THK)	

B-USE AS REQUIRED
D-ORDER BY THE METER
E-ORDER BY THE CENTIMETER
M-METRIC PART

187-0738 CONTROL GP-STIC LOCKOUT *(contd.)* i02262633

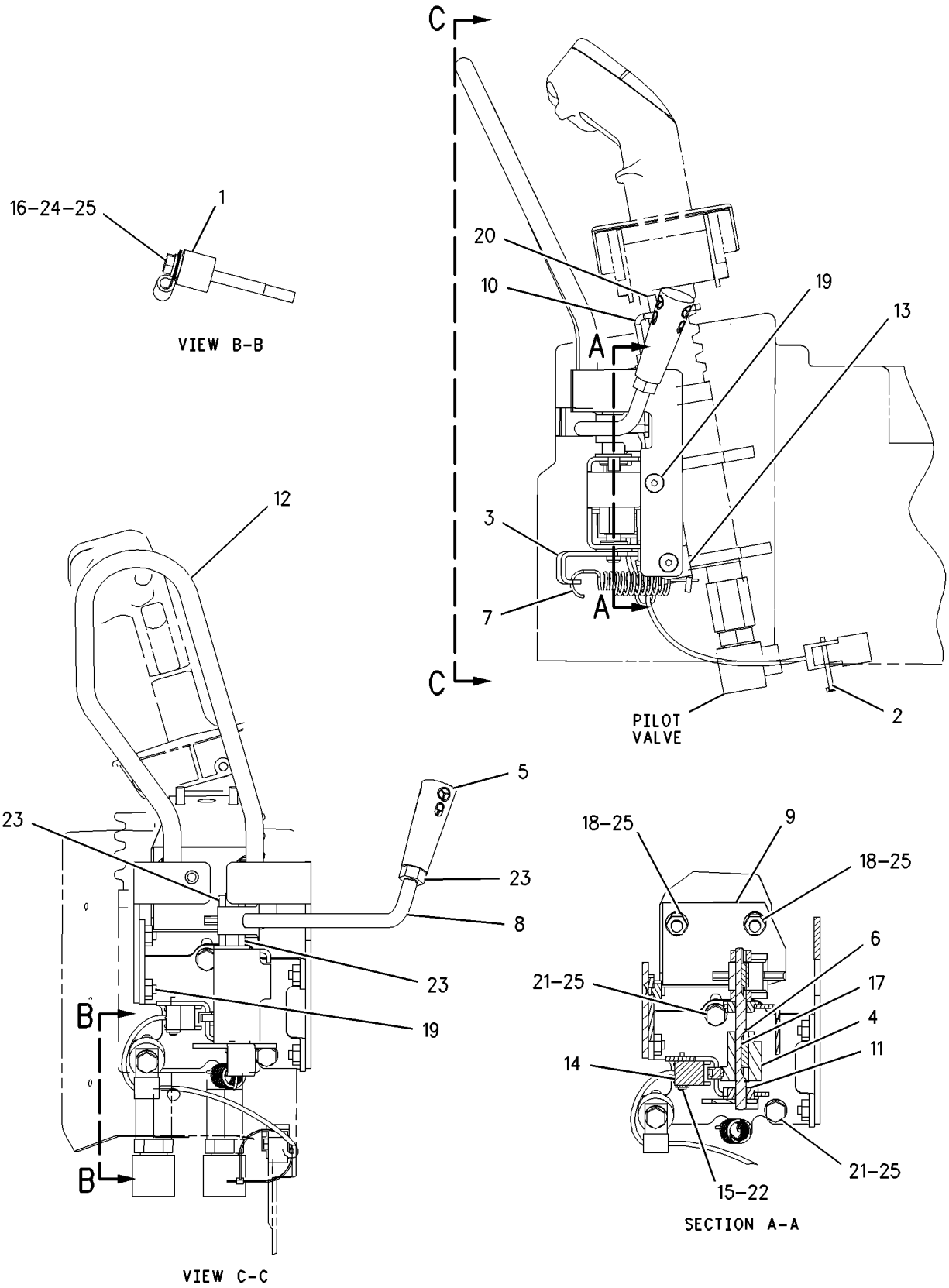

GRAPHIC #1 **<END>** g00774513

OPERATOR STATION

154-7443 CONTROL GP-UNPRGMED MONITOR–
CATERPILLAR MONITORING SYSTEM
S/N: BXY1-UP
PART OF 261-0400 WIRING GP-CAB

SMCS-7610 **i02588359**

NOTE	REF NO	GRAPHIC REF	PART NUMBER	QTY	PART NAME 1 2 3 4 5 6 (PRODUCT LEVEL)	SEE PAGE
	1	1	**252-4501**	1	CONTROL GP-UNPRGMED MONITOR (CATERPILLAR MONITORING SYSTEM)	

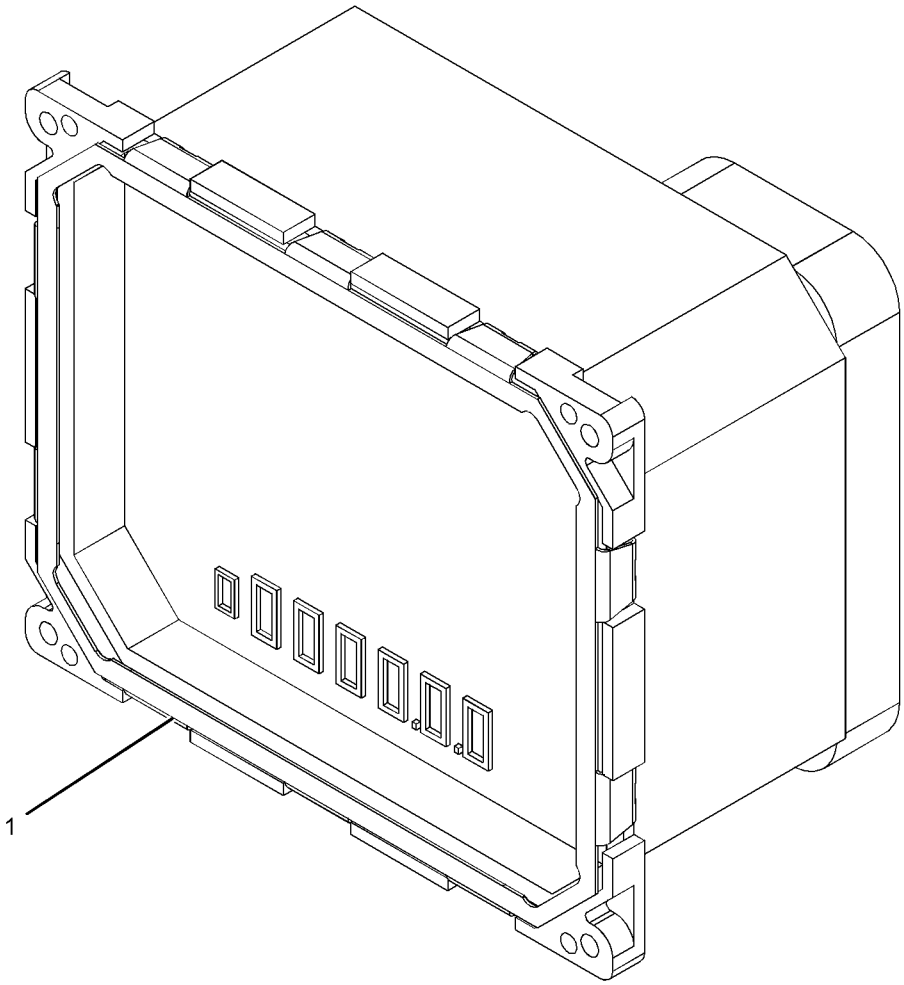

GRAPHIC #1 **<END>** g01299826

OPERATOR STATION

308-3869 CONTROL GP-UNPRGMED MONITOR—MESSENGER

S/N: BXY4000-UP
PART OF 343-3146 MONITOR GP-PAYLOAD
AN ATTACHMENT

SMCS-7610 **i03654800**

NOTE	REF NO	GRAPHIC REF	PART NUMBER	QTY	PART NAME 1 2 3 4 5 6 (PRODUCT LEVEL)	SEE PAGE
	1	1	*308-3868*	1	CONTROL AS-ELECTRONIC (MESSENGER)	
	1A	1	**124-0312**	1	SCREW-PAN HEAD (8-16X0.32-IN)	

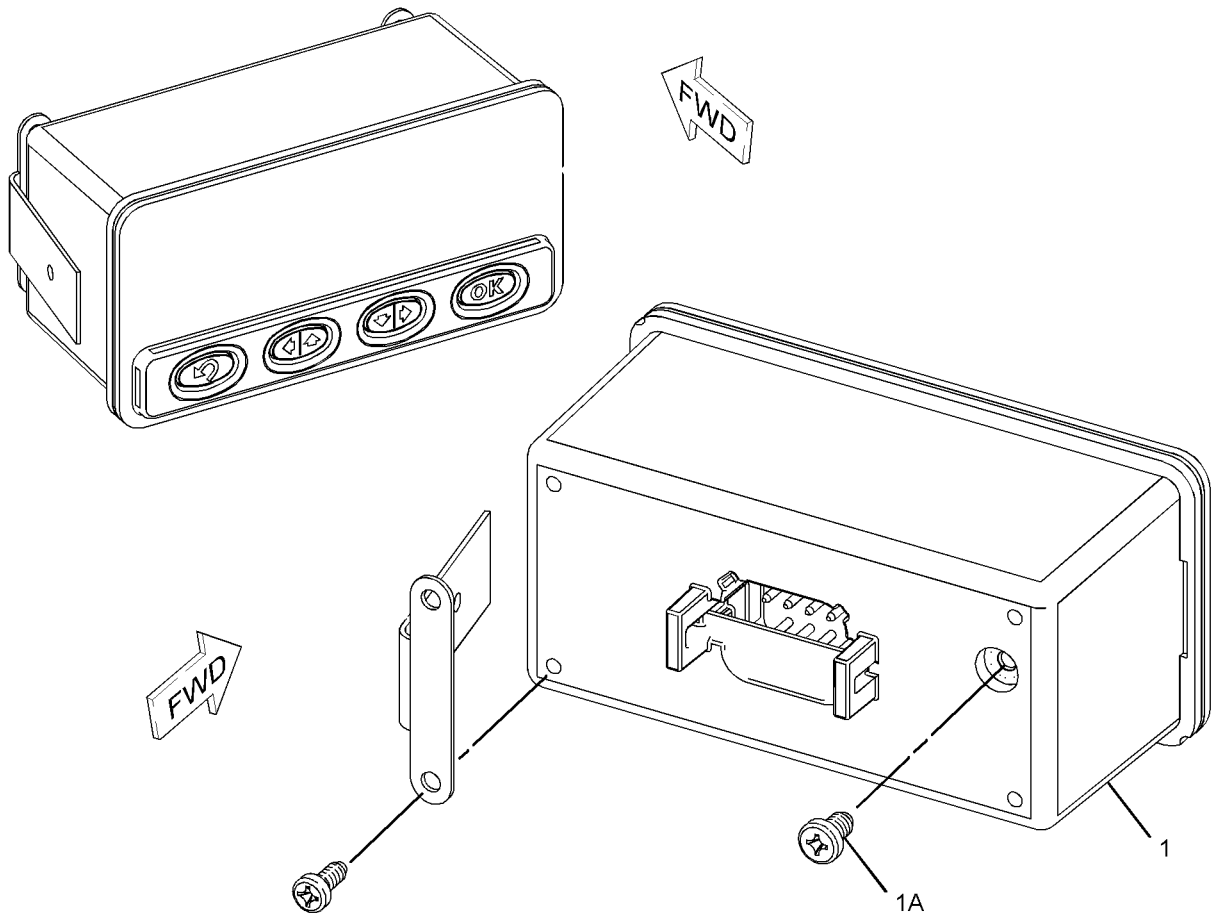

GRAPHIC #1 **<END>** g01866019

OPERATOR STATION

308-2729 CONTROL GP-XMSN OVERRIDE

S/N: BXY1900-UP

PART OF 2Q-8722, 2Q-8733, 2Q-8744, 2Q-8749, 2Q-8752, 2Q-8753 STEEL MILL AR AN ATTACHMENT

SMCS-1408, 3168, 3171 **i02743373**

NOTE	REF NO	GRAPHIC REF	PART NUMBER	QTY	PART NAME 1 2 3 4 5 6 (PRODUCT LEVEL)	SEE PAGE
	1	1	**189-7740**	1	HARNESS AS-CONTROL (TRANSMISSION OVERRIDE)	
		1	**6D-5256**	2	PLUG AS	
E		1	**114-8843**		SLEEVE-PLASTIC (20-CM)	
Y	2	1	*308-2710*	1	WIRING GP-ELECTRONICS BAY	559
	3	1	**1S-0994**	1	CLIP	

E-ORDER BY THE CENTIMETER
Y-SEPARATE ILLUSTRATION

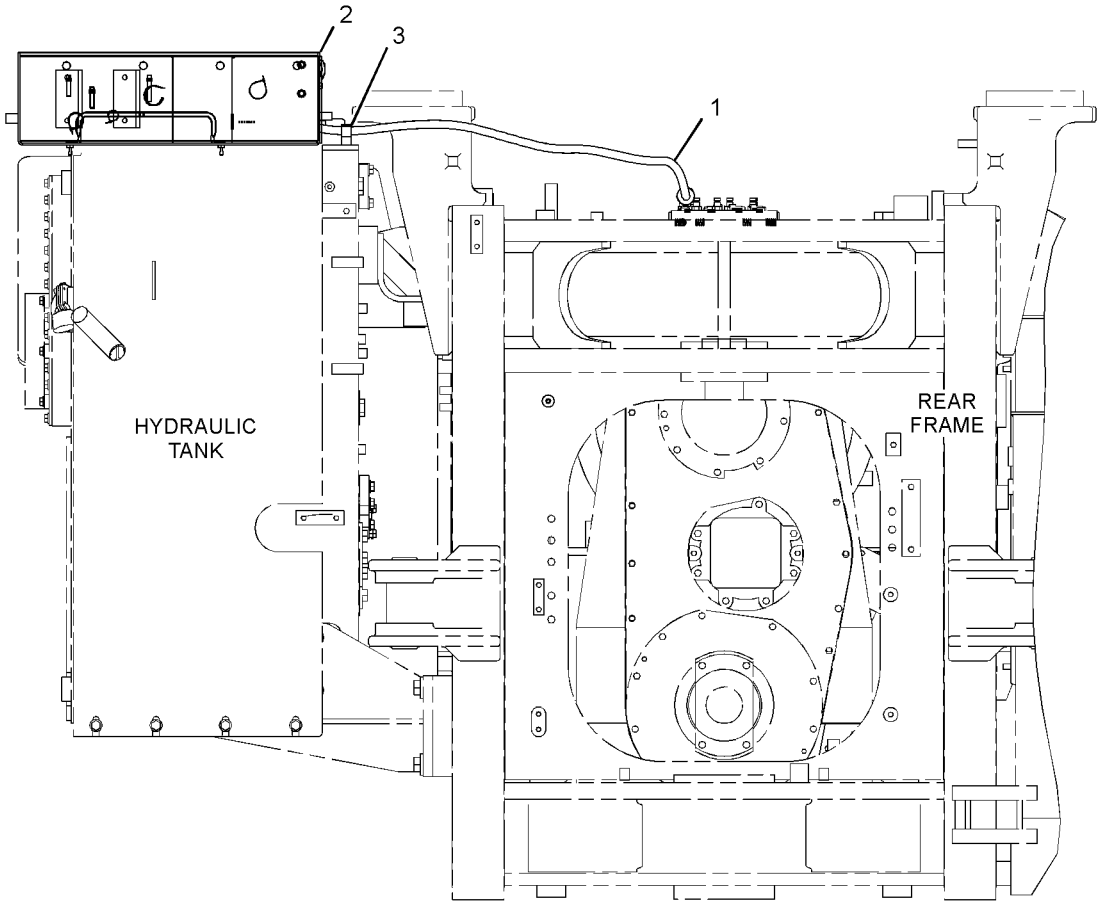

FRONT VIEW

GRAPHIC #1 **<END>** g01368501

OPERATOR STATION

164-4237 COVER GP-DASH

S/N: BXY1-UP
STIC STEERING
PART OF 227-3190, 292-6110, 308-2727, 346-3826 CAB AR
ALSO AN ATTACHMENT

SMCS-7314 **i03362206**

NOTE	REF NO	GRAPHIC REF	PART NUMBER	QTY	PART NAME 1 2 3 4 5 6 (PRODUCT LEVEL)	SEE PAGE
	1	1	**6V-2491**	4	RIVET-POP	
	2	1	**129-7184**	1	FILM-INSTRUCTION (ENGINE START)	
C	3	1	**339-4477**	1	PLATE AS	
M		1	**6V-9632**	2	NUT-WELD (M6X1-THD)	
	4	1	**173-5791**	1	COVER	
M	5	1	**9X-2042**	14	SCREW-TRUSS HEAD (M6X1X12-MM)	
M	6	1	**9X-2045**	2	SCREW-TRUSS HEAD (M6X1X20-MM)	
CM	7	1	**5C-2890**	2	NUT (M6X1-THD)	
C	8	1	**9X-8256**	2	WASHER (6.6X12X2-MM THK)	
C	9	1	**203-6481**	1	PLATE AS	

C-CHANGE FROM PREVIOUS TYPE
M-METRIC PART

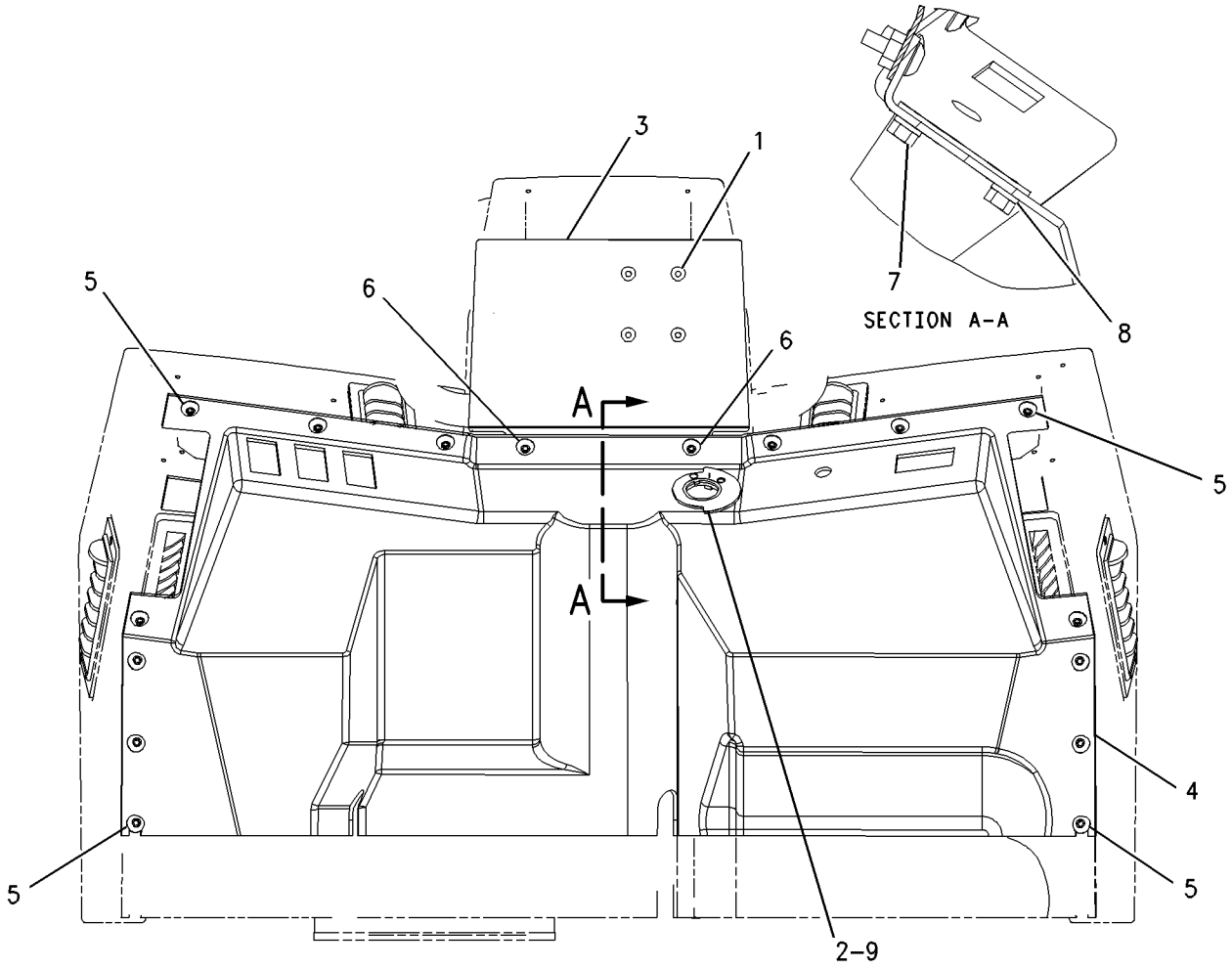

GRAPHIC #1 **<END>** g00818172

OPERATOR STATION

261-3226 DISPLAY GP-CAMERA—WORK AREA VISUAL SYSTEM

S/N: BXY1-UP
PART OF 300-5844 DISPLAY GP-CAMERA
AN ATTACHMENT

SMCS-7347 **i03816439**

NOTE	REF NO	GRAPHIC REF	PART NUMBER	QTY	PART NAME 1 2 3 4 5 6 (PRODUCT LEVEL)	SEE PAGE
	1	1	**261-3222**	1	MOUNTING GP-DISPLAY (WORK AREA VISUAL SYSTEM)	
		1	**259-4397**	1	CLAMP GP	
		1	**259-4399**	2	BASE	
	2	1	**261-3224**	1	MODULE GP-DISPLAY (WORK AREA VISUAL SYSTEM)	
	2A	1	**280-2691**	1	CABLE AS	
	2B	1	**102-8805**	1	KIT-RECEPTACLE (6-PIN)	
					(INCLUDES RECEPTACLE AS & WEDGE)	
	2C	1	**8T-8729**	5	PIN-CONNECTOR (16-GA TO 18-GA)	
	2D	1	**8T-8737**	1	PLUG-SEAL	
	3	1	**4B-4274**	4	WASHER (5.5X13X1.2-MM THK)	
M	4	1	**8T-0288**	4	BOLT (M5X0.8X12-MM)	

M-METRIC PART

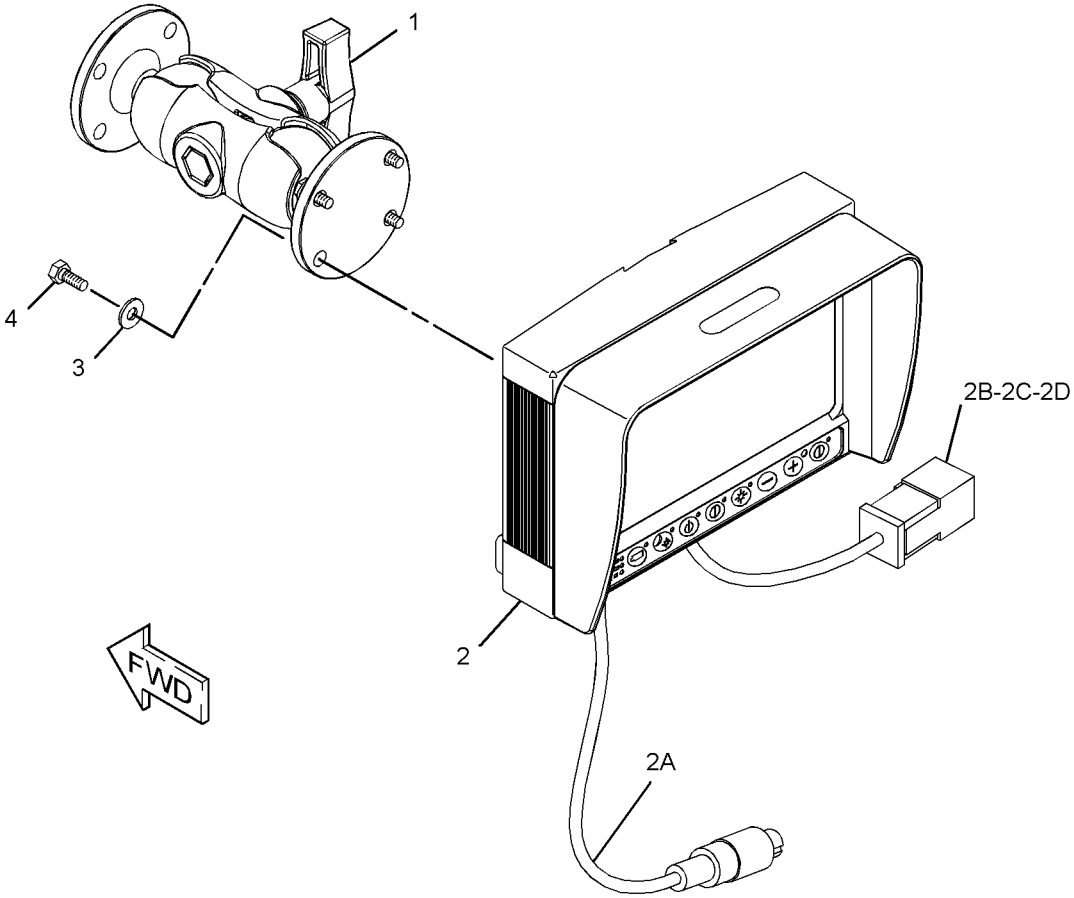

GRAPHIC #1 **<END>** g02069738

OPERATOR STATION

300-5844 DISPLAY GP-CAMERA

S/N: BXY1-2887
PART OF 285-3575, 285-3576 CAMERA AR
AN ATTACHMENT

SMCS-7347 **i02673345**

NOTE	REF NO	GRAPHIC REF	PART NUMBER	QTY	PART NAME 1 2 3 4 5 6 (PRODUCT LEVEL)	SEE PAGE
	1	1	**3S-2093**	13	STRAP-CABLE	
	2	1	**194-8648**	2	BOSS	
	3	1	**251-4243**	1	CONNECTOR GP-ELECTRONIC	
	4	1	**251-8248**	1	CABLE AS-COMMUNICATION (CAMERA)	
Y	5	1	**261-3226**	1	DISPLAY GP-CAMERA (WORK AREA VISUAL SYSTEM)	1735
	6	1	**303-8126**	1	BRACKET	
	7	1	**130-5300**	1	CLIP	
	8	1	**132-5789**	1	CLIP	
	9	1	**5P-4116**	2	WASHER-HARD (8.8X20.5X2-MM THK)	
M	10	1	**6V-7357**	4	BOLT (M6X1X25-MM)	
M	11	1	**7X-0818**	2	BOLT (M8X1.25X45-MM)	
	12	1	**8T-4205**	4	WASHER-HARD (7.2X14.5X2-MM THK)	
M	13	1	**8T-7964**	4	NUT (M6X1-THD)	

M-METRIC PART
Y-SEPARATE ILLUSTRATION

300-5844 **DISPLAY GP-CAMERA** *(contd.)* **i02673345**

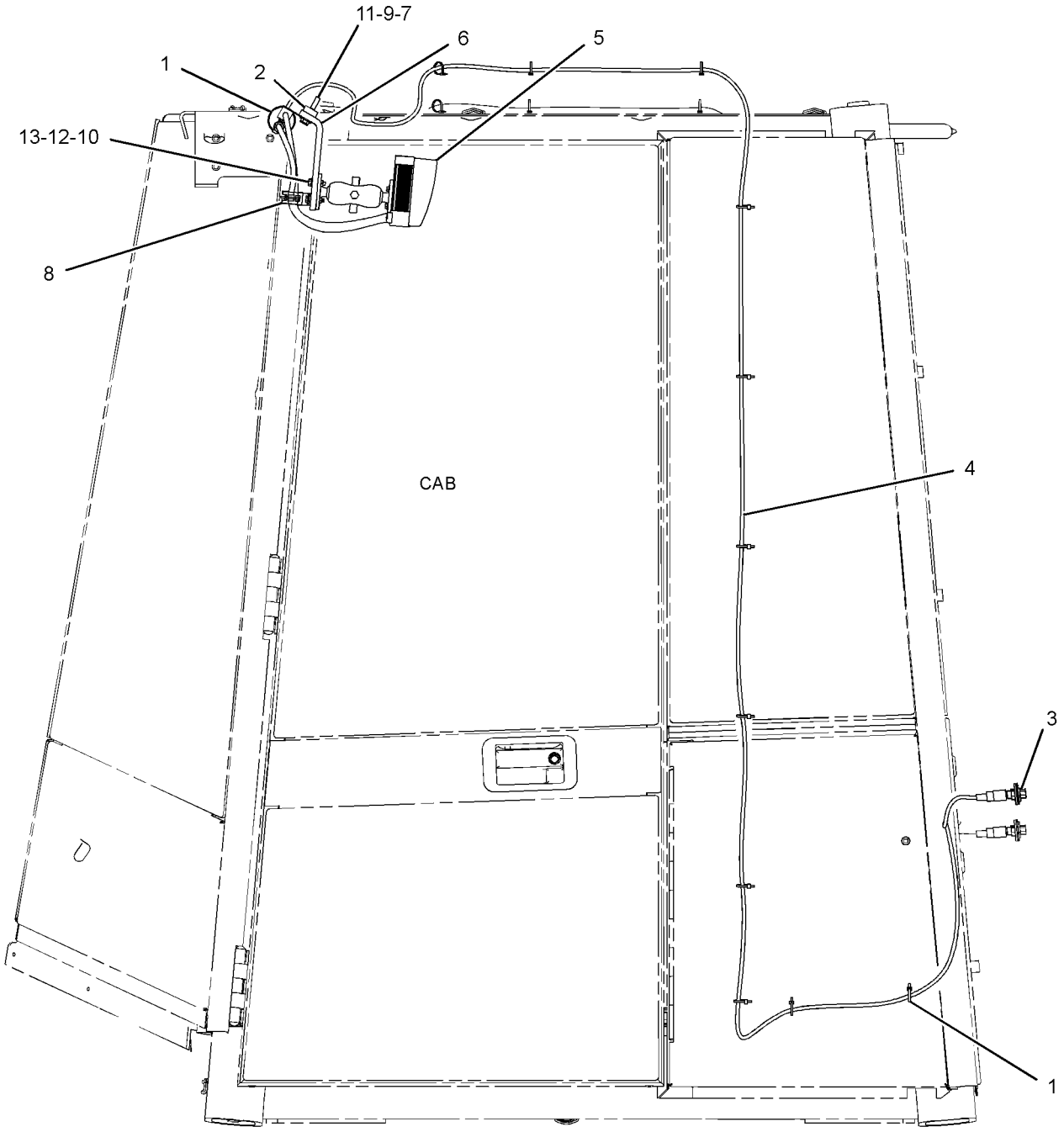

LEFT SIDE VIEW

GRAPHIC #1 **<END>** g01354828

OPERATOR STATION

300-5844 DISPLAY GP-CAMERA

S/N: BXY2888-UP
PART OF 285-3575, 285-3576 CAMERA AR
AN ATTACHMENT

SMCS-7347 **i03558280**

NOTE	REF NO	GRAPHIC REF	PART NUMBER	QTY	PART NAME 1 2 3 4 5 6 (PRODUCT LEVEL)	SEE PAGE
	1	1	**3S-2093**	13	STRAP-CABLE	
	2	1	**194-8648**	2	BOSS	
C	3	1	**333-8153**	1	CONNECTOR GP-ELECTRONIC	
	4	1	**251-8248**	1	CABLE AS-COMMUNICATION (CAMERA)	
Y	5	1	**261-3226**	1	DISPLAY GP-CAMERA (WORK AREA VISUAL SYSTEM)	1735
	6	1	**303-8126**	1	BRACKET	
	7	1	**130-5300**	1	CLIP	
	8	1	**132-5789**	1	CLIP	
	9	1	**5P-4116**	2	WASHER-HARD (8.8X20.5X2-MM THK)	
M	10	1	**6V-7357**	4	BOLT (M6X1X25-MM)	
M	11	1	**7X-0818**	2	BOLT (M8X1.25X45-MM)	
	12	1	**8T-4205**	4	WASHER-HARD (7.2X14.5X2-MM THK)	
M	13	1	**8T-7964**	4	NUT (M6X1-THD)	

C-CHANGE FROM PREVIOUS TYPE
M-METRIC PART
Y-SEPARATE ILLUSTRATION

300-5844 **DISPLAY GP-CAMERA** *(contd.)* **i03558280**

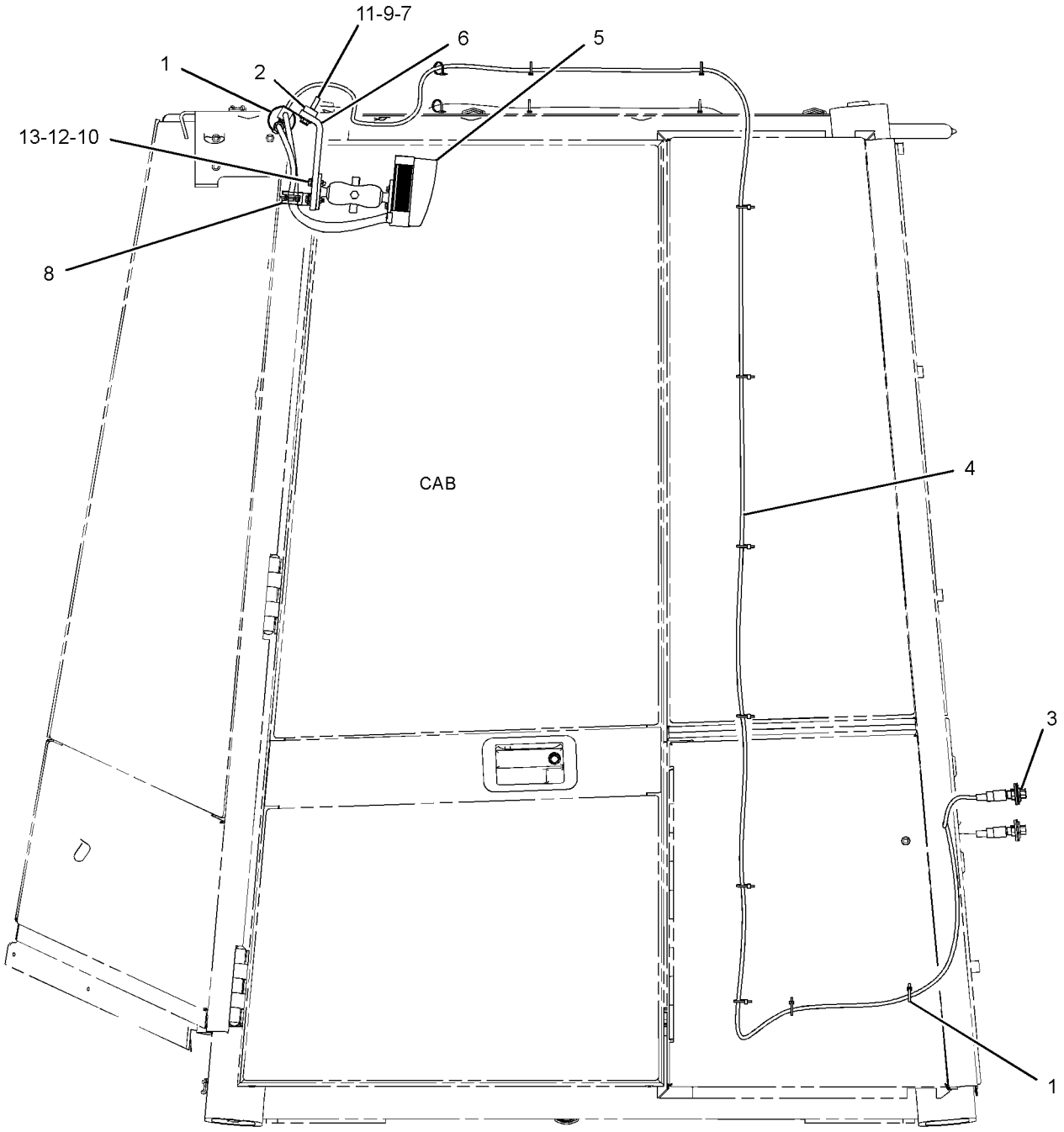

LEFT SIDE VIEW

GRAPHIC #1 **<END>** g01354828

OPERATOR STATION

165-5576 DOOR GP-CAB—LH

S/N: BXY1-1899

PART OF 228-9530 ROPS GP-ENCLOSED

SMCS-7308 **i02613616**

NOTE	REF NO	GRAPHIC REF	PART NUMBER	QTY	PART NAME 1 2 3 4 5 6 (PRODUCT LEVEL)	SEE PAGE
	1	1	**5P-7803**	2	PLUG-BUTTON	
	2	1	**7X-2497**	1	HANDLE-DOOR	
M	3	1	**8T-4180**	4	SCREW-MACHINE (M5X0.8X20-MM)	
	4	1	**8T-4747**	2	BRACKET	
	5	1	**8Y-6386**	1	SEAL-HANDLE	
M	6	1	**9X-2044**	3	SCREW-TRUSS HEAD (M6X1X16-MM)	
	7	1	**187-3554**	1	LATCH AS	
	8	1	**111-1354**	1	HANDLE AS	
	9	1	**129-2567**	1	GLASS	
	10	1	**129-2568**	1	GLASS	
	11	1	**129-2578**	1	COVER	
	12	1	**165-5575**	1	DOOR AS	
		1	**129-2576**	1	BRACKET AS	
M		1	**6V-9632**	3	NUT-WELD (M6X1-THD)	
		1	**129-2584**	1	HANDLE	
		1	**130-6392**	3	HINGE	
M	13	1	**8C-3210**	1	BOLT (M6X1X16-MM)	
M	14	1	**8T-4181**	4	BOLT (M6X1X20-MM)	
E	15	1	**3E-3805**		SEAL (450CM)	

E-ORDER BY THE CENTIMETER
M-METRIC PART

165-5576 DOOR GP-CAB *(contd.)* **i02613616**

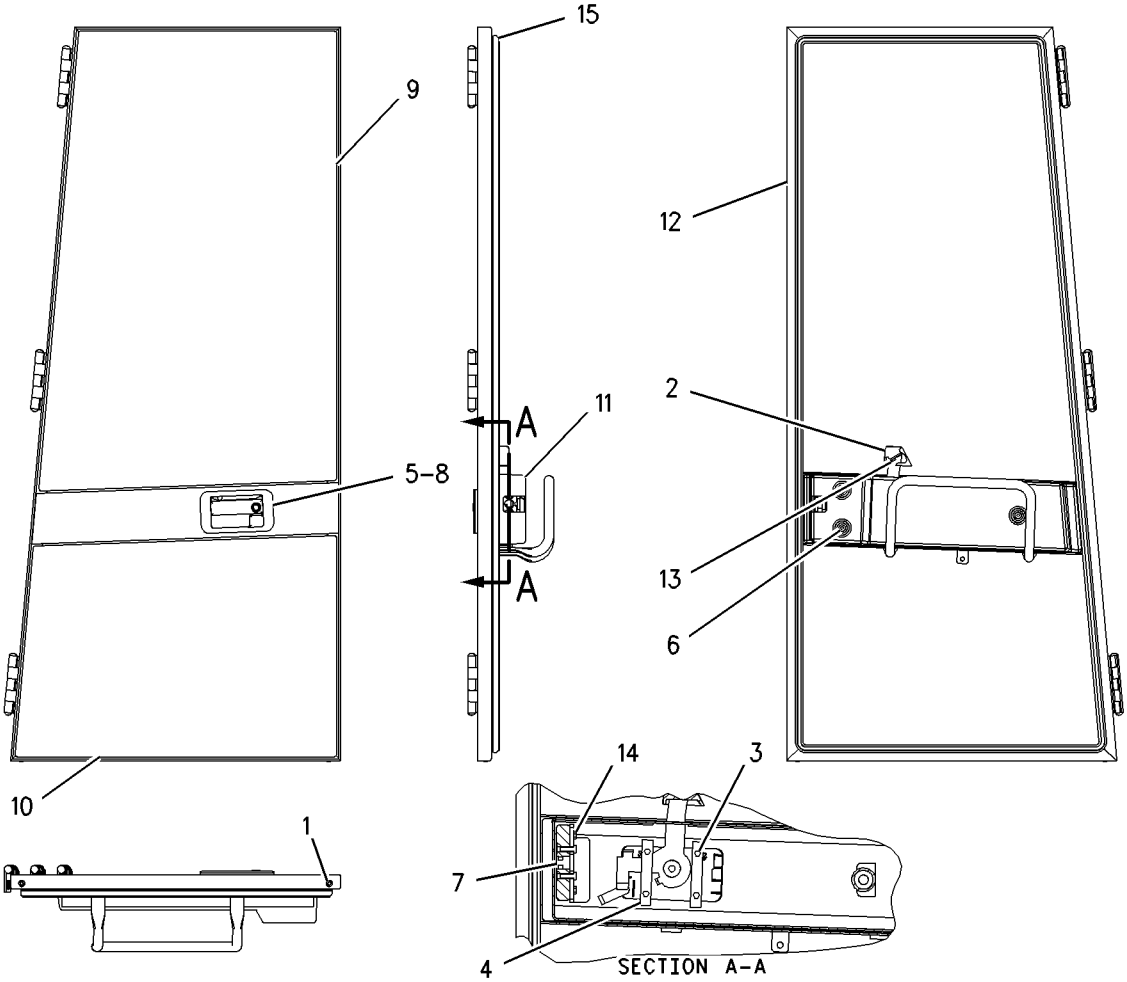

GRAPHIC #1 **<END>** g00692932

OPERATOR STATION

165-5725 DOOR GP-CAB–RH

S/N: BXY1-1899

PART OF 228-9530 ROPS GP-ENCLOSED

SMCS-7308 **i01662242**

NOTE	REF NO	GRAPHIC REF	PART NUMBER	QTY	PART NAME 1 2 3 4 5 6 (PRODUCT LEVEL)	SEE PAGE
	1	1	**5P-7803**	2	PLUG-BUTTON	
	2	1	**103-1122**	1	MOUNT-LATCH	
	3	1	**165-5722**	1	DOOR AS	
		1	**130-6392**	3	HINGE	
	4	1	**165-5728**	1	GLASS	
E	5	1	**3E-3805**		SEAL (450CM)	

E-ORDER BY THE CENTIMETER

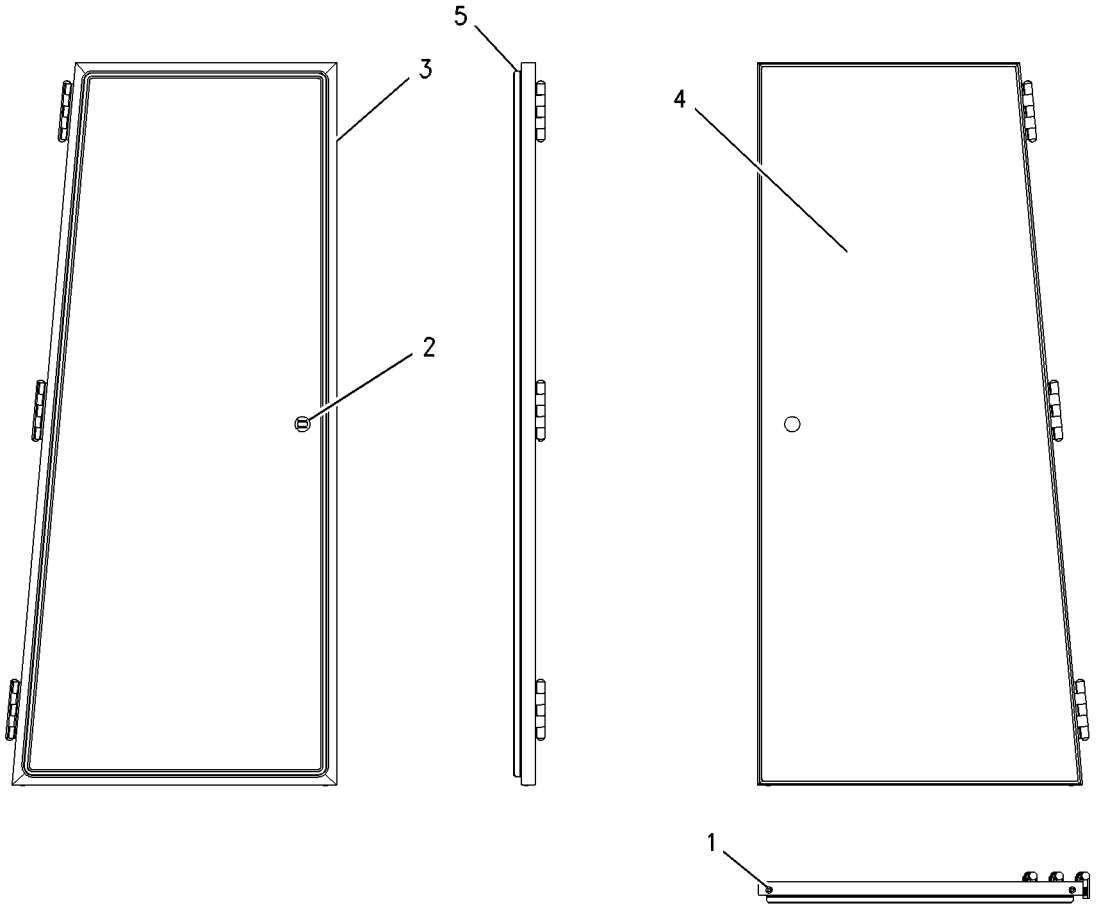

GRAPHIC #1 **<END>** g00860530

OPERATOR STATION

179-3737 DOOR GP-CAB–LH

S/N: BXY1900-UP
PART OF 292-6893, 292-6895 ROPS GP-ENCLOSED
ALSO AN ATTACHMENT

SMCS-7308 **i01444597**

NOTE	REF NO	GRAPHIC REF	PART NUMBER	QTY	PART NAME 1 2 3 4 5 6 (PRODUCT LEVEL)	SEE PAGE
	1	1	**5P-7803**	2	PLUG-BUTTON	
	2	1	**7X-2497**	1	HANDLE-DOOR	
M	3	1	**8T-4180**	4	SCREW-MACHINE (M5X0.8X20-MM)	
	4	1	**8T-4747**	2	BRACKET	
	5	1	**8Y-6386**	1	SEAL-HANDLE	
	6	1	**9R-8538**	1	PLUNGER	
	7	1	**111-1354**	1	HANDLE AS	
		1	**8Y-4501**	1	SPRING-HANDLE	
	8	1	**111-1356**	1	LATCH AS-ROTARY	
	9	1	**129-2553**	1	DOOR AS	
		1	**129-2584**	1	HANDLE	
		1	**130-6392**	3	HINGE	
	10	1	**129-2567**	1	GLASS	
	11	1	**129-2578**	1	COVER	
	12	1	**201-0364**	1	SHEET	
M	13	1	**5C-2890**	1	NUT (M6X1-THD)	
	14	1	**5P-4115**	1	WASHER-HARD (7.2X19X2-MM THK)	
M	15	1	**8C-3210**	1	BOLT (M6X1X16-MM)	
M	16	1	**8T-4181**	4	BOLT (M6X1X20-MM)	
M	17	1	**8T-4971**	1	BOLT (M6X1X30-MM)	
M	18	1	**9X-2044**	3	SCREW-TRUSS HEAD (M6X1X16-MM)	
E	19	1	**3E-3805**		SEAL (450CM)	

E-ORDER BY THE CENTIMETER
M-METRIC PART

179-3737 **DOOR GP-CAB** *(contd.)* **i01444597**

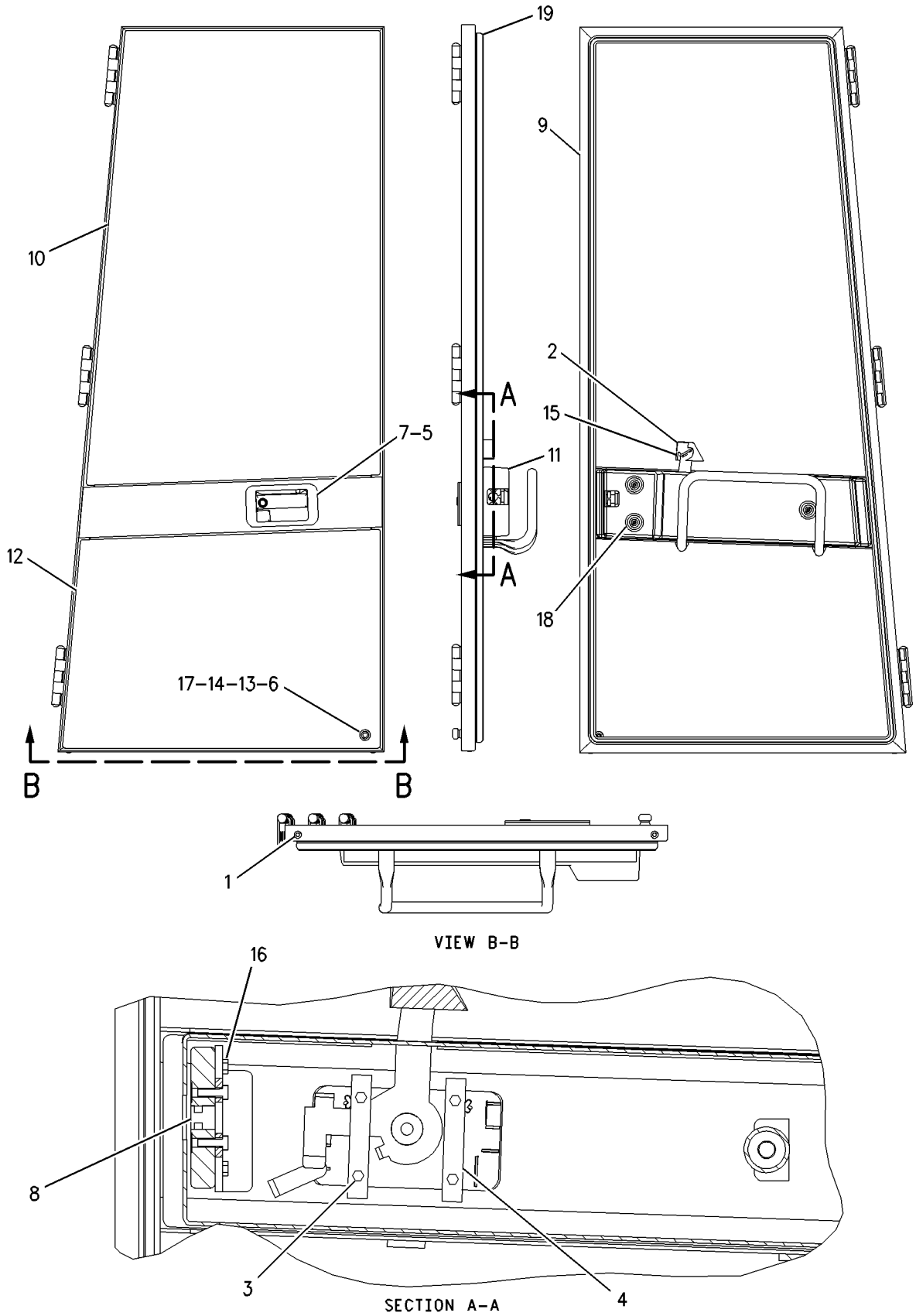

GRAPHIC #1 **<END>** g00775878

OPERATOR STATION

179-3738 DOOR GP-CAB–RH

S/N: BXY1900-UP

PART OF 292-6893, 292-6895, 308-2708 ROPS GP-ENCLOSED

ALSO AN ATTACHMENT

SMCS-7308 **i02715943**

NOTE	REF NO	GRAPHIC REF	PART NUMBER	QTY	PART NAME 1 2 3 4 5 6 (PRODUCT LEVEL)	SEE PAGE
	1	1	**5P-7803**	2	PLUG-BUTTON	
	2	1	**7X-2497**	1	HANDLE-DOOR	
M	3	1	**8T-4180**	4	SCREW-MACHINE (M5X0.8X20-MM)	
	4	1	**8T-4747**	2	BRACKET	
	5	1	**8Y-6386**	1	SEAL-HANDLE	
	6	1	**9R-8538**	1	PLUNGER	
	7	1	**111-1353**	1	HANDLE AS	
		1	**8Y-4501**	1	SPRING-HANDLE	
	8	1	**111-1355**	1	LATCH AS-ROTARY	
	9	1	**129-2552**	1	DOOR AS	
		1	**129-2584**	1	HANDLE	
		1	**130-6392**	3	HINGE	
	10	1	**129-2565**	1	GLASS	
	11	1	**129-2577**	1	COVER	
	12	1	**201-0364**	1	SHEET	
M	13	1	**5C-2890**	1	NUT (M6X1-THD)	
	14	1	**5P-4115**	1	WASHER-HARD (7.2X19X2-MM THK)	
M	15	1	**8C-3210**	1	BOLT (M6X1X16-MM)	
M	16	1	**8T-4181**	4	BOLT (M6X1X20-MM)	
M	17	1	**8T-4971**	1	BOLT (M6X1X30-MM)	
M	18	1	**9X-2044**	3	SCREW-TRUSS HEAD (M6X1X16-MM)	
E	19	1	**3E-3805**		SEAL (450-CM)	

E-ORDER BY THE CENTIMETER
M-METRIC PART

179-3738 **DOOR GP-CAB** *(contd.)* **i02715943**

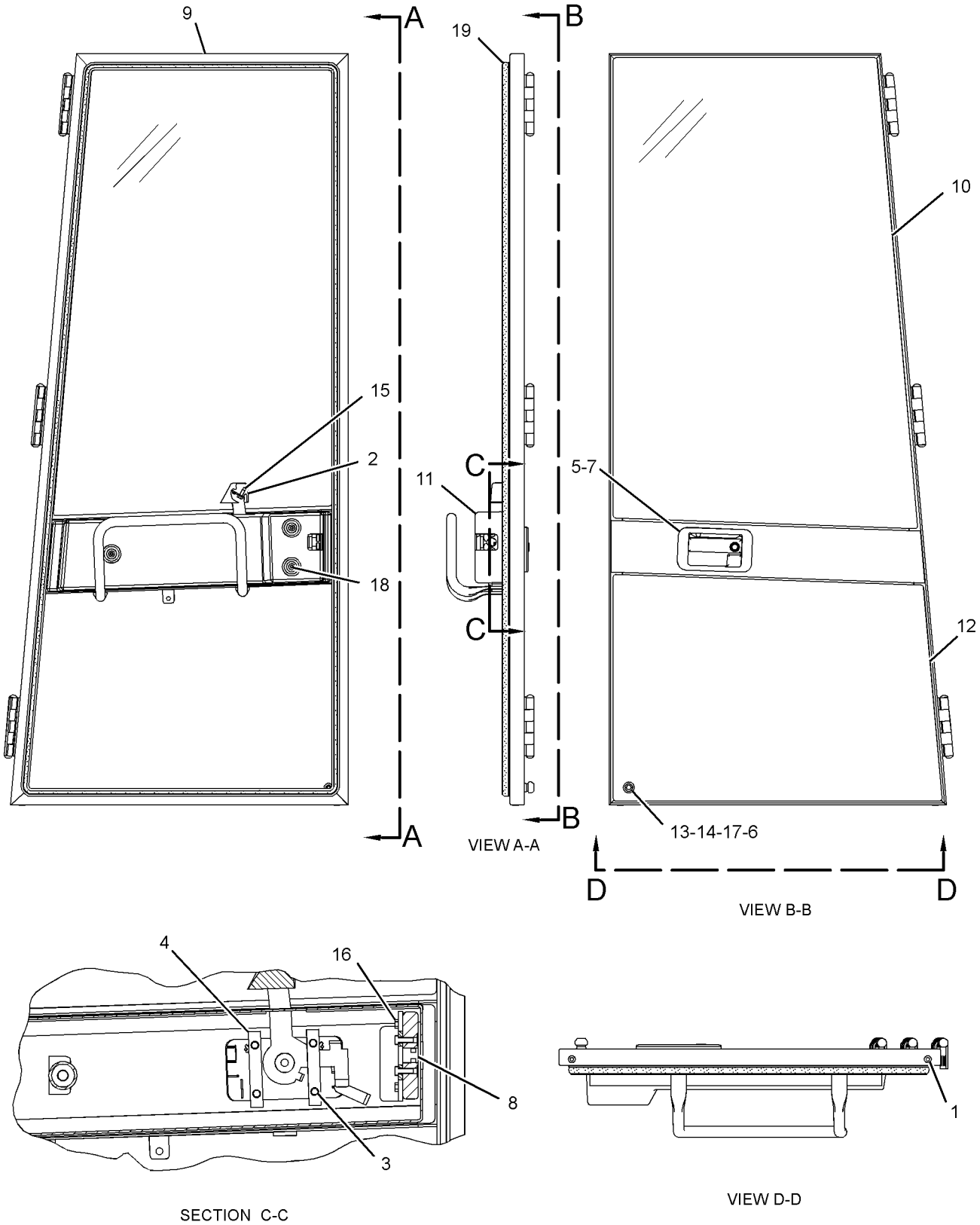

GRAPHIC #1 **<END>** g01364843

OPERATOR STATION

227-3270 DOOR GP-CAB—WITH SLIDING WINDOW, LH

S/N: BXY1900-UP
PART OF 308-2708 ROPS GP-ENCLOSED
AN ATTACHMENT

SMCS-7308 **i03384910**

NOTE	REF NO	GRAPHIC REF	PART NUMBER	QTY	PART NAME 1 2 3 4 5 6 (PRODUCT LEVEL)	SEE PAGE
	1	1	**5P-7803**	2	PLUG-BUTTON	
	2	1	**7X-2497**	1	HANDLE-DOOR	
	3	1	**8T-4747**	2	BRACKET	
	4	1	**8Y-6386**	1	SEAL-HANDLE	
	5	1	**111-1354**	1	HANDLE AS	
		1	**8Y-4501**	1	SPRING-HANDLE	
	6	1	**111-1356**	1	LATCH AS-ROTARY	
Y	7	1	*113-2512*	1	WINDOW GP-DOOR (LH)	1907
	8	1	**129-2553**	1	DOOR AS	
		1	**129-2584**	1	HANDLE	
		1	**130-6392**	3	HINGE	
	9	1	**129-2578**	1	COVER	
	10	1	**136-2720**	1	GLASS-CAB (DOOR)	
	11	1	**201-0364**	1	SHEET	
M	12	1	**5C-2890**	1	NUT (M6X1-THD)	
	13	1	**5P-4115**	1	WASHER-HARD (7.2X19X2-MM THK)	
M	14	1	**8C-3210**	1	BOLT (M6X1X16-MM)	
M	15	1	**8T-4180**	4	SCREW-MACHINE (M5X0.8X20-MM)	
M	16	1	**8T-4181**	4	BOLT (M6X1X20-MM)	
M	17	1	**9X-2044**	4	SCREW-TRUSS HEAD (M6X1X16-MM)	
E	18	1	**3E-3805**		SEAL (450-CM)	

E-ORDER BY THE CENTIMETER
M-METRIC PART
Y-SEPARATE ILLUSTRATION

227-3270 DOOR GP-CAB *(contd.)* i03384910

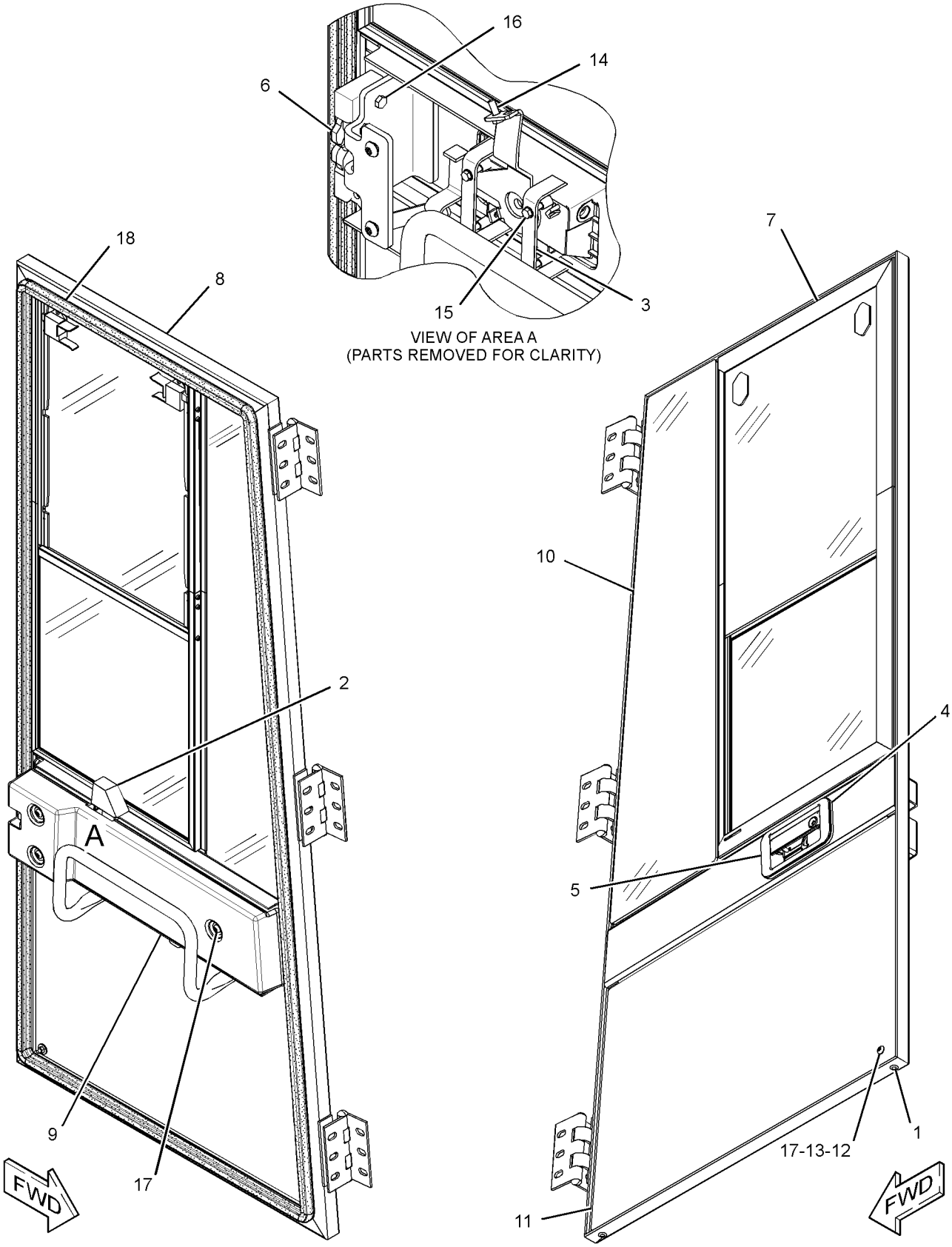

GRAPHIC #1 **<END>** g01939673

OPERATOR STATION

308-2712 DOOR GP-CAB—RH

S/N: BXY1900-3999
PART OF 308-2708 ROPS GP-ENCLOSED
AN ATTACHMENT

SMCS-7308 **i03253931**

NOTE	REF NO	GRAPHIC REF	PART NUMBER	QTY	PART NAME 1 2 3 4 5 6 (PRODUCT LEVEL)	SEE PAGE
	1	1	**5P-7803**	2	PLUG-BUTTON	
	2	1	**7X-2497**	1	HANDLE-DOOR	
	3	1	**8T-4747**	2	BRACKET	
	4	1	**8Y-6386**	1	SEAL-HANDLE	
	6	1	**111-1353**	1	HANDLE AS	
		1	**8Y-4501**	1	SPRING-HANDLE	
	7	1	**111-1355**	1	LATCH AS-ROTARY	
Y	8	1	*113-2513*	1	WINDOW GP-DOOR (RH)	1908
	9	1	**129-2552**	1	DOOR AS	
		1	**129-2584**	1	HANDLE	
		1	**130-6392**	3	HINGE	
	10	1	**129-2577**	1	COVER	
B	12	1	**201-0364**	1	SHEET	
M	13	1	**5C-2890**	1	NUT (M6X1-THD)	
	14	1	**5P-4115**	1	WASHER-HARD (7.2X19X2-MM THK)	
M	15	1	**8C-3210**	1	BOLT (M6X1X16-MM)	
M	16	1	**8T-4180**	4	SCREW-MACHINE (M5X0.8X20-MM)	
M	17	1	**8T-4181**	4	BOLT (M6X1X20-MM)	
M	19	1	**9X-2044**	4	SCREW-TRUSS HEAD (M6X1X16-MM)	
	20	1	**3E-3805**		SEAL (450-CM)	
B	21	1	**136-2718**	1	GLASS-CAB (DOOR)	

B-USE AS REQUIRED
M-METRIC PART
Y-SEPARATE ILLUSTRATION

308-2712 DOOR GP-CAB *(contd.)* **i03253931**

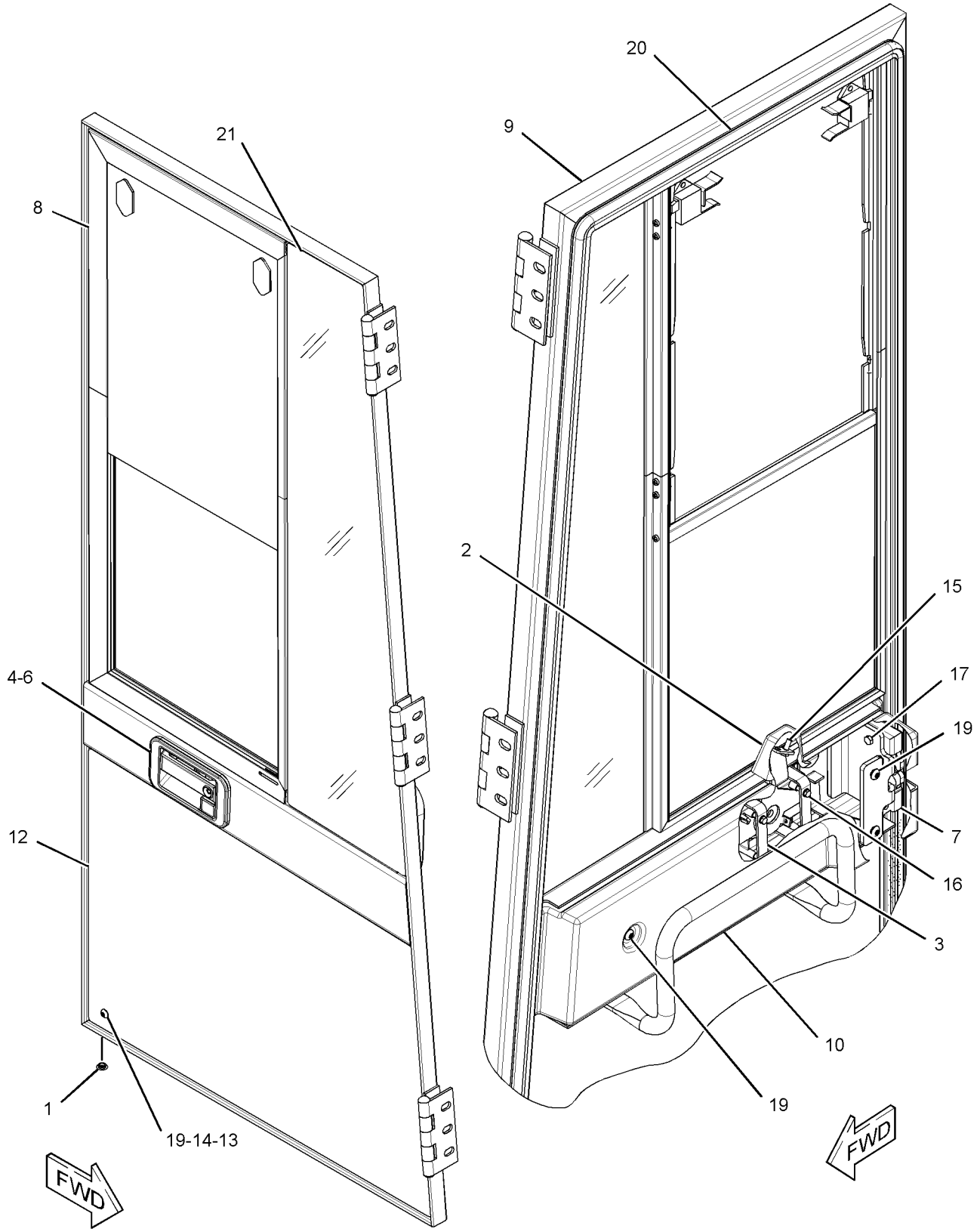

GRAPHIC #1 **<END>** g01669794

OPERATOR STATION

178-4139 DOOR GP-STORAGE

S/N: BXY1-UP

PART OF 114-5124 PLATFORM GP-OPERATOR

SMCS-7268, 7273 **i03123663**

NOTE	REF NO	GRAPHIC REF	PART NUMBER	QTY	PART NAME 1 2 3 4 5 6 (PRODUCT LEVEL)	SEE PAGE
	1	1	**3B-4610**	1	PIN-COTTER	
	2	1	**4E-4450**	1	ROD AS	
		1	**8T-4121**	3	WASHER-HARD (11X21X2.5-MM THK)	
	3	1	**7X-7729**	2	WASHER (11X25X3-MM THK)	
	4	1	**2V-3726**	4	BUMPER	
	5	1	**9U-1169**	1	BRACKET	
	6	1	**113-6003**	1	DOOR AS	
		1	**6V-2370**	4	RIVET-POP	
		1	**9X-2299**	1	LATCH AS	
M		1	**8T-3490**	2	NUT-WELD (M10X1.5-THD)	
	7	1	**119-1151**	2	HINGE AS	
					(EACH INCLUDES)	
M		1	**8T-3490**	6	NUT-WELD (M10X1.5-THD)	
	8	1	**323-3545**	1	FRAME AS	
	9	1	**8T-4121**	13	WASHER-HARD (11X21X2.5-MM THK)	
M	10	1	**8T-4136**	14	BOLT (M10X1.5X25-MM)	

M-METRIC PART

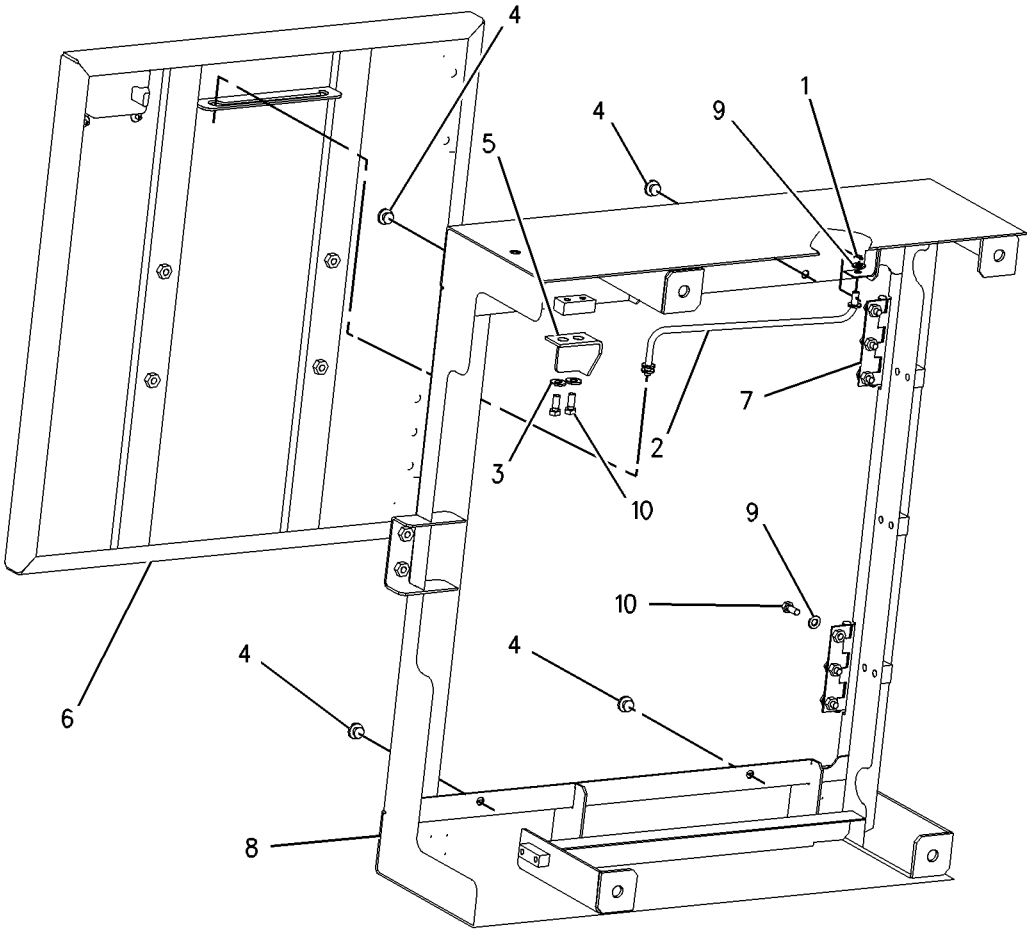

GRAPHIC #1 **<END>** g00802480

OPERATOR STATION

165-6769 DUCT & FILTER GP-CAB AIR

S/N: BXY1-UP

PART OF 227-3190, 292-6110, 308-2727, 346-3826 CAB AR

ALSO AN ATTACHMENT

SMCS-7337, 7342 **i03743584**

NOTE	REF NO	GRAPHIC REF	PART NUMBER	QTY	PART NAME 1 2 3 4 5 6 (PRODUCT LEVEL)	SEE PAGE
	1	1	**3V-7476**	1	KEY-HANDLE	
	2	1	**8Y-6388**	4	LOUVER AS-VENT	
	3	1	**107-0266**	1	FILTER ELEMENT-CAB AIR (STANDARD EFFICIENCY)	
	4	1	**107-7308**	1	DUCT AS-RH	
M		1	**3E-4304**	4	INSERT-THREADED (M6X1-THD)	
	5	1	**112-7448**	1	FILTER ELEMENT-CAB AIR (STANDARD EFFICIENCY)	
	6	1	**114-3466**	1	SEAL	
	7	1	**128-3786**	1	SEAL	
	8	1	**128-3787**	1	SEAL	
	9	1	**155-8357**	1	PLUG	
	10	1	**155-9653**	1	SEAL	
	11	1	**161-1353**	1	INSULATION	
	12	1	**184-6673**	1	DUCT AS (LH)	
M		1	**3E-4304**	4	INSERT-THREADED (M6X1-THD)	
	13	1	**319-3583**	1	COVER AS	
		1	**7K-4201**	2	NUT-SPEED	
	14	1	**330-3495**	1	PLATE	
	15	1	**104-2091**	8	SCREW-FLAT HEAD (6-20X0.5-IN)	
M	16	1	**9X-2039**	3	SCREW-TRUSS HEAD (M10X1.5X35-MM)	
M	17	1	**9X-2040**	2	SCREW-TRUSS HEAD (M10X1.5X25-MM)	
M	18	1	**9X-2042**	8	SCREW-TRUSS HEAD (M6X1X12-MM)	
D	20	1	**6V-0723**		SEAL (0.25-M EACH)	
E	21	1	**227-0213**		SEAL (18.5-CM)	
E	21A	1	**227-0213**		SEAL (223-CM)	
E	21B	1	**227-0213**		SEAL (8-CM)	
E	21C	1	**227-0213**		SEAL (28-CM)	
E	21D	1	**227-0213**		SEAL (6-CM)	
	22	1	**2R-2376**	4	WASHER (7X16X0.8-MM THK)	
	23	1	**274-2392**	2	THUMBSCREW	

D-ORDER BY THE METER
E-ORDER BY THE CENTIMETER
M-METRIC PART

165-6769 **DUCT & FILTER GP-CAB AIR** *(contd.)* **i03743584**

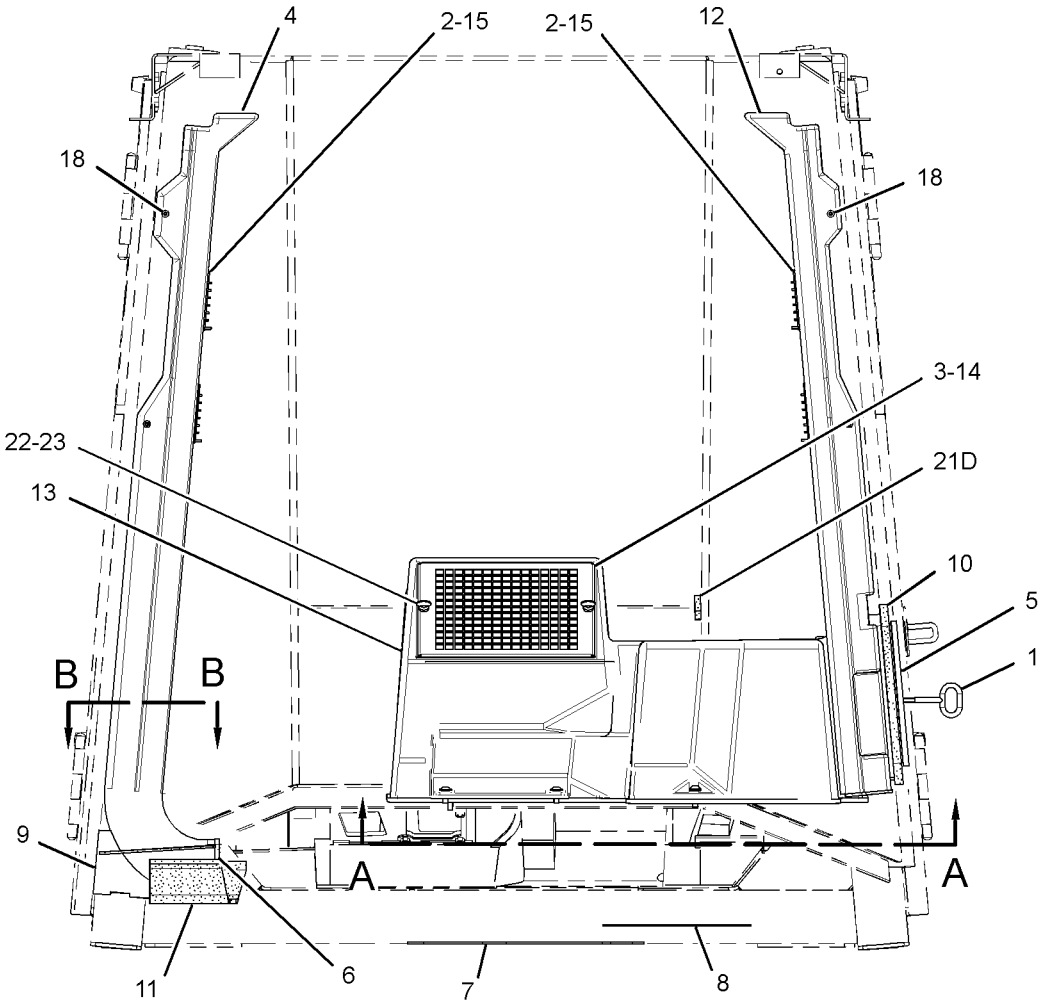

FRONT VIEW

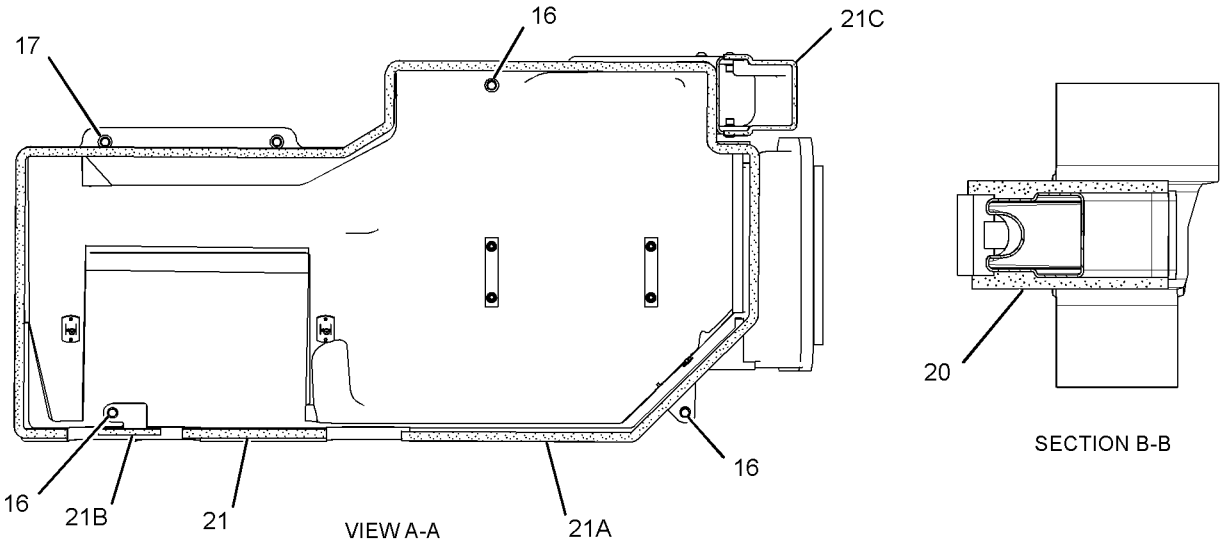

VIEW A-A

SECTION B-B

GRAPHIC #1 **<END>** g02061359

OPERATOR STATION

165-6560 DUCT GP-CAB AIR

S/N: BXY1-UP

PART OF 227-3190, 292-6110, 308-2727, 346-3826 CAB AR

ALSO AN ATTACHMENT

SMCS-734D **i03626555**

NOTE	REF NO	GRAPHIC REF	PART NUMBER	QTY	PART NAME 1 2 3 4 5 6 (PRODUCT LEVEL)	SEE PAGE
	1	1	**4P-7581**	1	CLIP	
	2	1	**8Y-6352**	2	LOUVER AS	
	3	1	**8Y-6388**	6	LOUVER AS-VENT	
E	4	1	**227-0213**		SEAL (68-CM)	
	5	1	**165-6561**	1	DUCT AS-AIR	
	6	1	**104-2091**	12	SCREW-FLAT HEAD (NO 6X0.5-IN)	
M	7	1	**5C-7261**	4	NUT (M8X1.25-THD)	
	8	1	**9N-0869**	4	WASHER-HARD (8.8X25.5X2-MM THK)	

E-ORDER BY THE CENTIMETER
M-METRIC PART

165-6560 **DUCT GP-CAB AIR** *(contd.)* **i03626555**

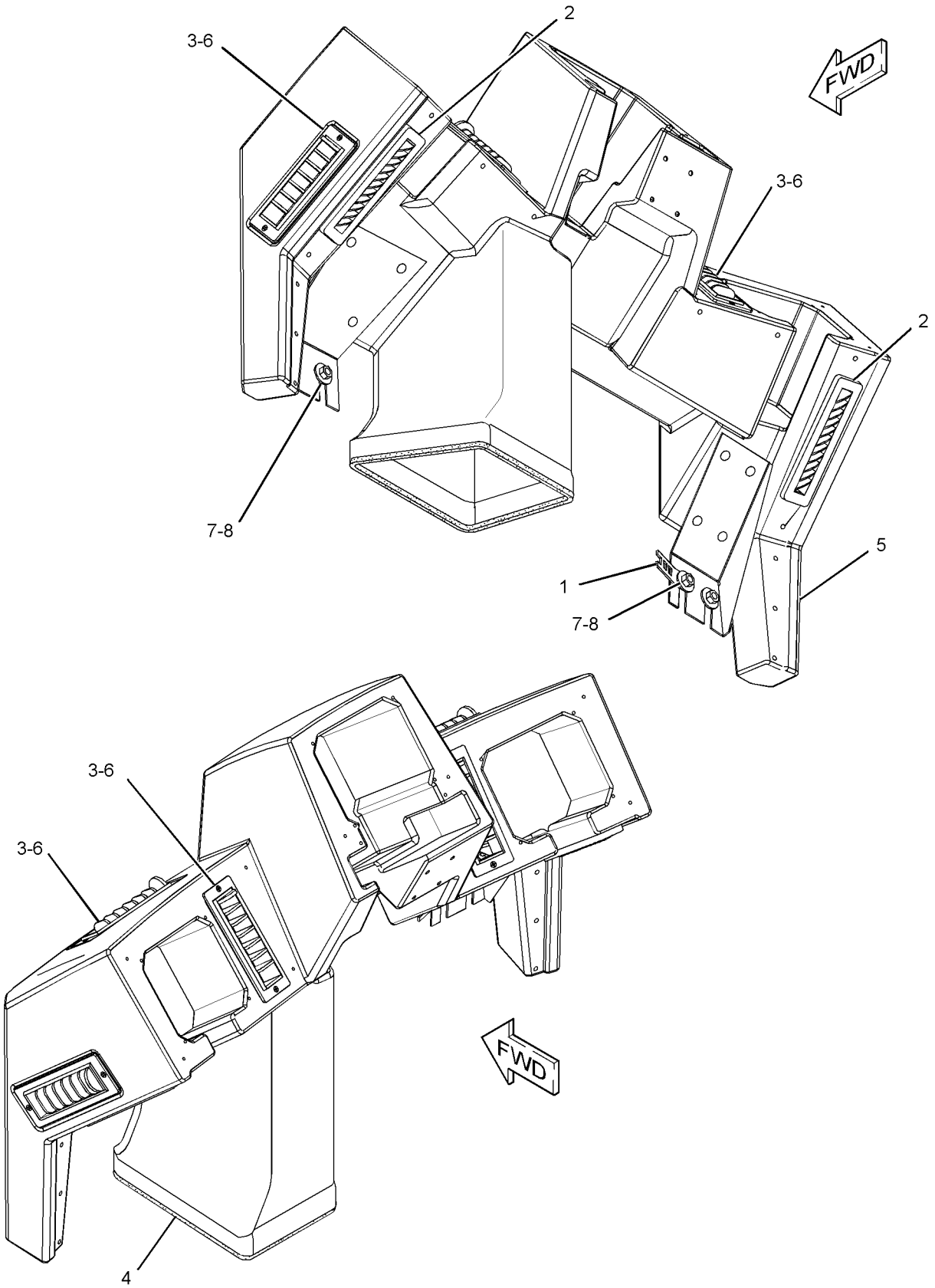

GRAPHIC #1 **<END>** g01341585

OPERATOR STATION

326-3071 FLOOR MAT GP

S/N: BXY1900-UP
PART OF 292-6110, 308-2727, 346-3826 CAB AR
ALSO AN ATTACHMENT

SMCS-726M **i03079700**

NOTE	REF NO	GRAPHIC REF	PART NUMBER	QTY	PART NAME 1 2 3 4 5 6 (PRODUCT LEVEL)	SEE PAGE
	1	1	**162-6505**	1	FLOOR MAT	

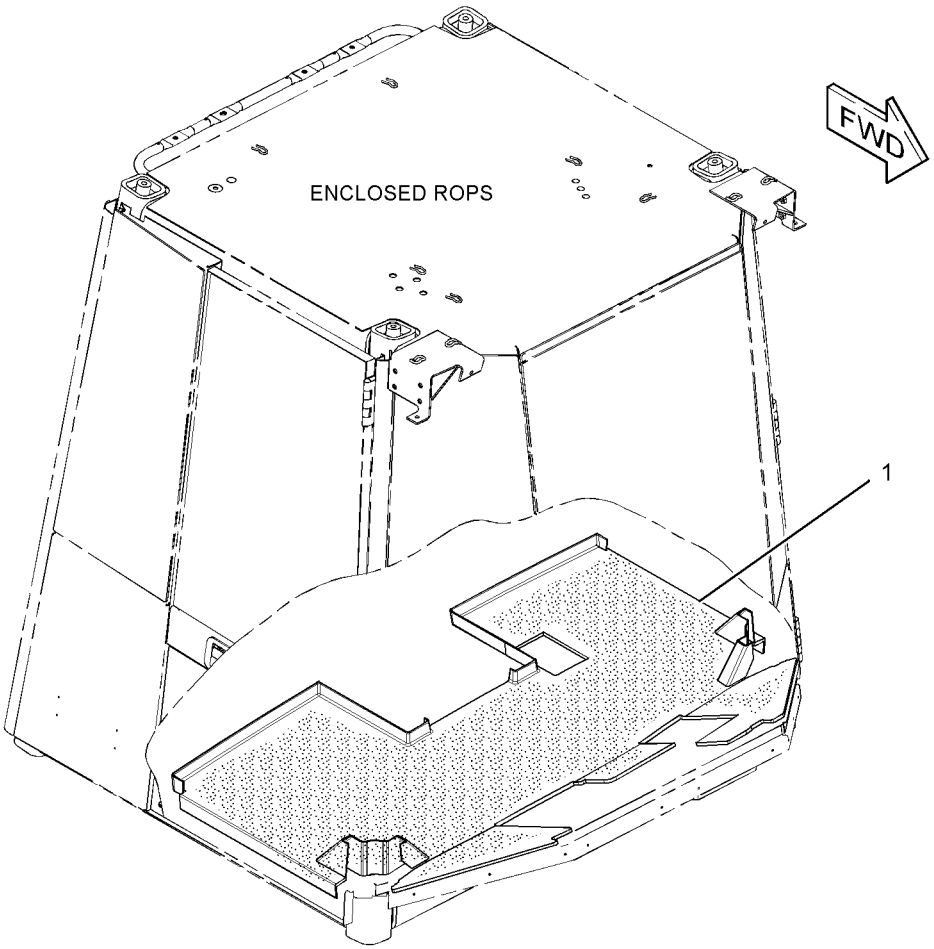

GRAPHIC #1 **<END>** g01609593

OPERATOR STATION

173-8466 HORN GP-ELECTRIC

S/N: BXY1-3999

PART OF 225-5452, 284-2987 ELECTRICAL AR, 285-6400 LIGHTING AR-FLOOD & SIGNAL, 230-5673 LIGHTING AR-SIGNAL, 285-6399 LIGHTING AR-STOP & FLOOD ALSO AN ATTACHMENT

SMCS-7402 **i01529557**

NOTE	REF NO	GRAPHIC REF	PART NUMBER	QTY	PART NAME 1 2 3 4 5 6 (PRODUCT LEVEL)	SEE PAGE
	1	1	**163-1201**	2	HORN AS (24-VOLT, LOW TONE)	
	2	1	**174-7875**	2	HORN AS (24-VOLT, HIGH TONE)	
	3	1	**2M-6835**	2	PIPE	
M	4	1	**8T-6870**	2	BOLT (M8X1.25X70-MM)	
	5	1	**8T-4224**	4	WASHER-HARD (8.8X16X2-MM THK)	
M	6	1	**8T-6912**	2	BOLT (M8X1.25X50-MM)	
	7	1	**1B-4971**	2	SPACER (0.406X1X1-IN THK)	

M-METRIC PART

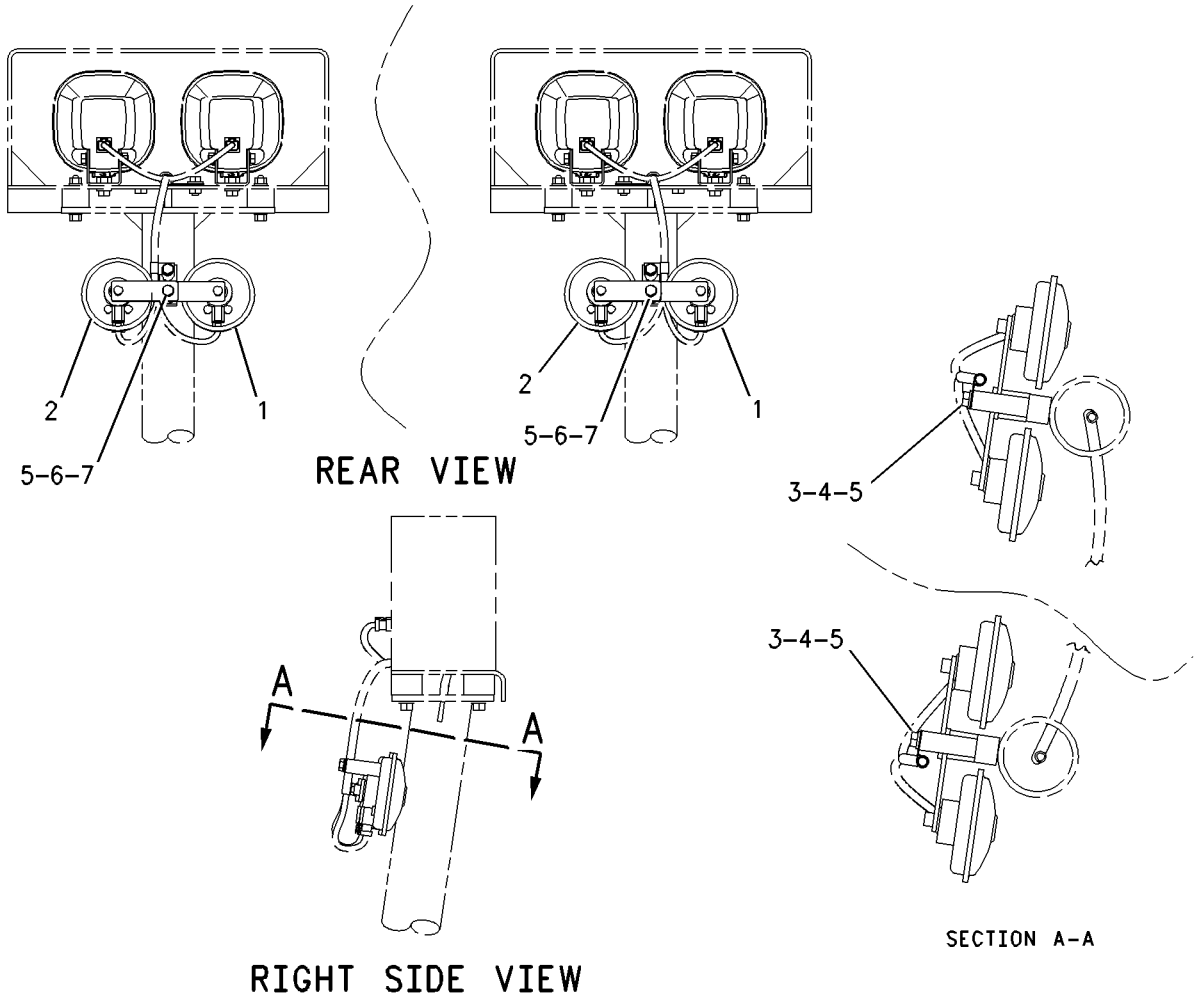

GRAPHIC #1 **<END>** g00794049

OPERATOR STATION

162-6884 INSTALLATION GP-CONTROLS

S/N: BXY1-2490

PART OF 227-3200, 292-6092, 308-2725 OPERATOR AR

ALSO AN ATTACHMENT

SMCS-1265, 4284 **i01013408**

NOTE	REF NO	GRAPHIC REF	PART NUMBER	QTY	PART NAME 1 2 3 4 5 6 (PRODUCT LEVEL)	SEE PAGE
	1	1	**3J-4818**	1	LOCKWASHER	
	2	1	**9U-0830**	1	END-YOKE ROD	
	3	1	**096-0067**	1	PIN-CLEVIS	
	4	1	**162-6505**	1	FLOOR MAT	
	5	1	**5B-9192**	1	PIN-COTTER	
M	6	1	**5C-2874**	1	NUT (M5X0.8-THD)	

M-METRIC PART

162-6884 **INSTALLATION GP-CONTROLS** *(contd.)* **i01013408**

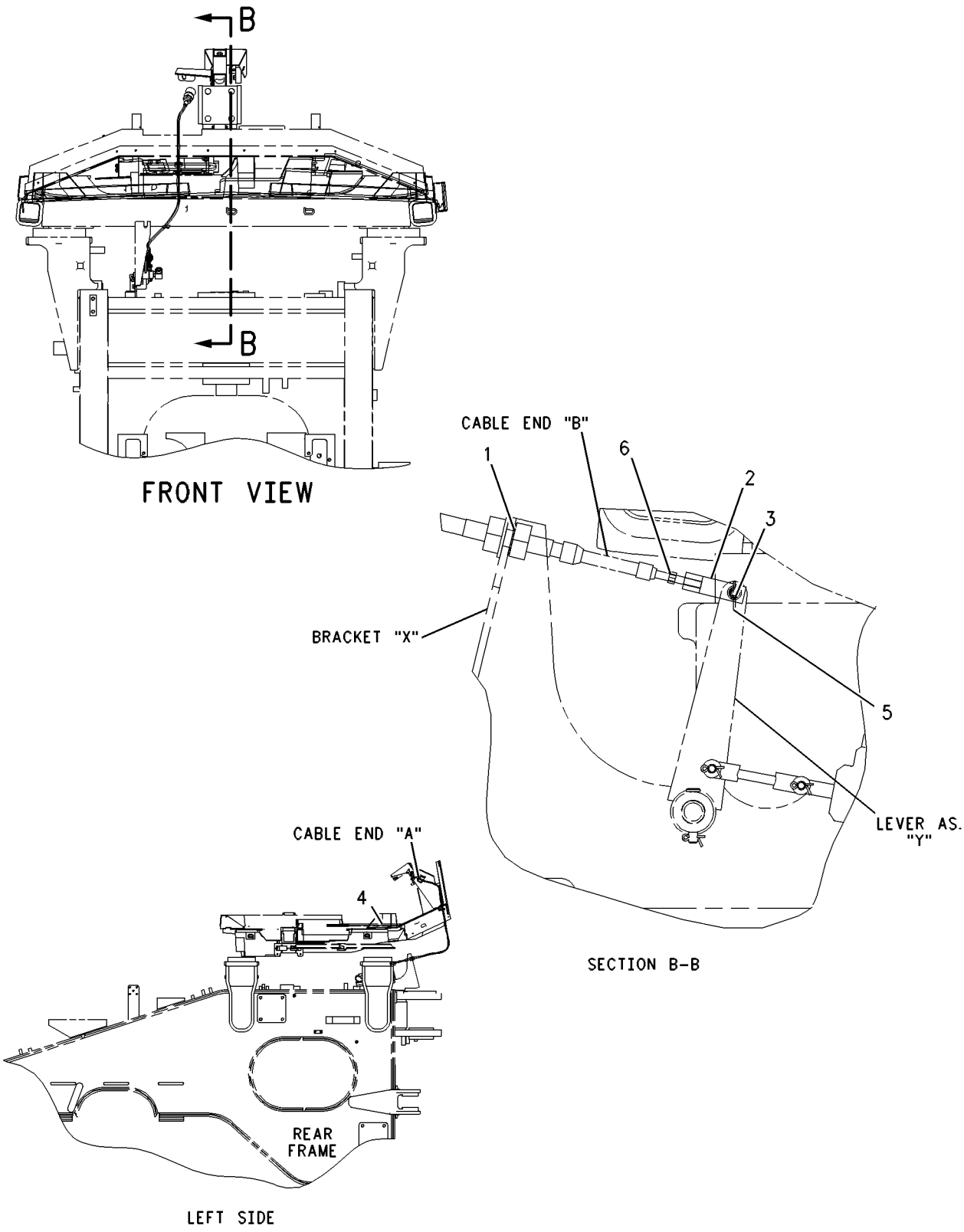

GRAPHIC #1 **<END>** g00545553

OPERATOR STATION

327-6917 INSTALLATION GP-CONTROLS—PARKING BRAKE

S/N: BXY2491-UP

PART OF 292-6092, 308-2725, 346-3822 OPERATOR AR

ALSO AN ATTACHMENT

SMCS-1265, 4284 **i03150622**

NOTE	REF NO	GRAPHIC REF	PART NUMBER	QTY	PART NAME 1 2 3 4 5 6 (PRODUCT LEVEL)	SEE PAGE
	1	1	**3J-4818**	1	LOCKWASHER	
	2	1	**9U-0830**	1	END-YOKE ROD	
	3	1	**096-0067**	1	PIN-CLEVIS	
	4	1	**5B-9192**	1	PIN-COTTER	
M	5	1	**5C-2874**	1	NUT (M5X0.8-THD)	

M-METRIC PART

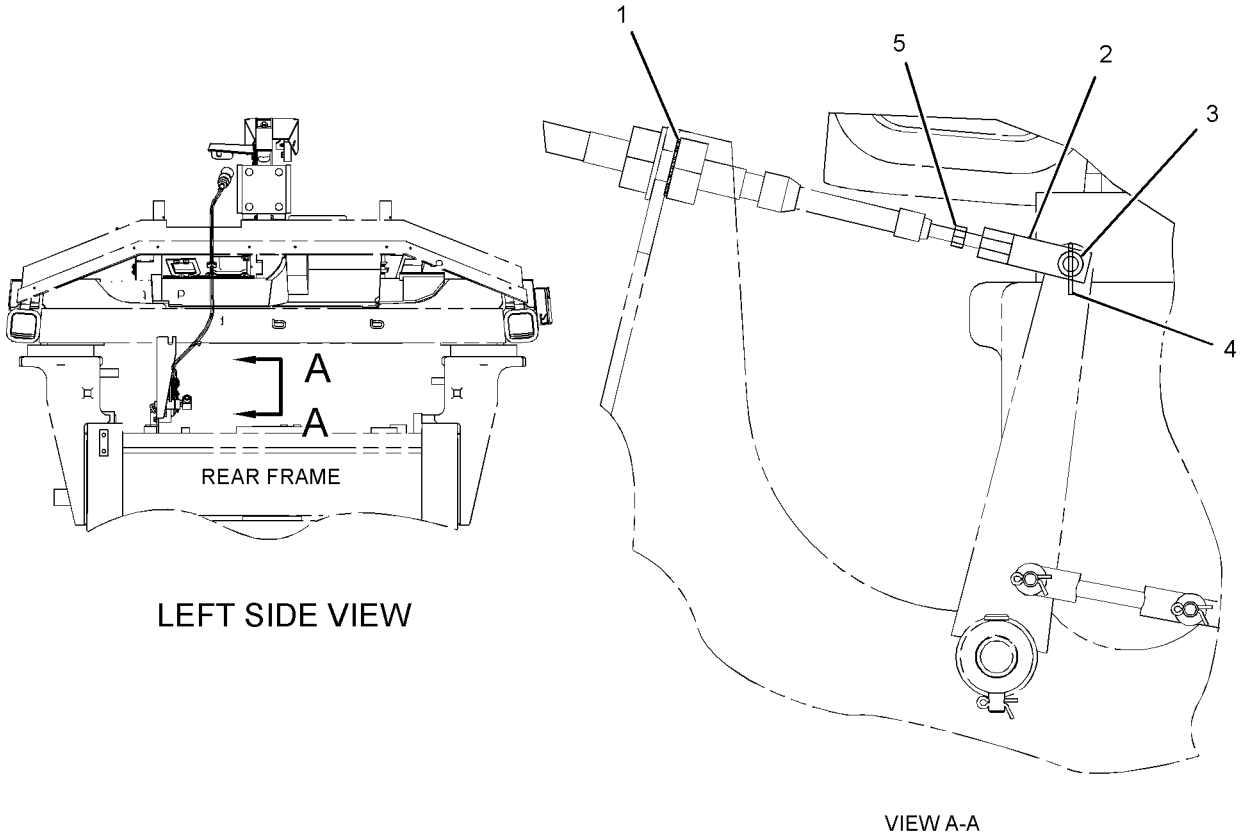

GRAPHIC #1 **<END>** g01854175

OPERATOR STATION

228-9628 INSTALLATION GP-RADIO

S/N: BXY1-UP

PART OF 227-3190, 292-6110, 308-2727, 346-3826 CAB AR

ALSO AN ATTACHMENT

SMCS-7338 **i03373765**

NOTE	REF NO	GRAPHIC REF	PART NUMBER	QTY	PART NAME 1 2 3 4 5 6 (PRODUCT LEVEL)	SEE PAGE
	1	1	**3S-2093**	2	STRAP-CABLE	
	2	1	**3V-4694**	1	PLUG-BUTTON	
	3	1	**6T-7695**	2	SPEAKER AS-RADIO	
	4	1	**6V-2687**	8	SCREW-PAN HEAD (10-24X1-IN)	
	5	1	**9U-2331**	1	ANTENNA AS (COMMUNICATION RADIO)	
	6	1	**9U-4431**	1	MOUNT-ANTENNA	
	7	1	**9U-8263**	1	COVER	
	8	1	**124-4884**	1	CABLE AS	
	9	1	**132-3522**	1	PLATE	
	10	1	**011-7960**	1	GROMMET	

228-9628 **INSTALLATION GP-RADIO** *(contd.)* **i03373765**

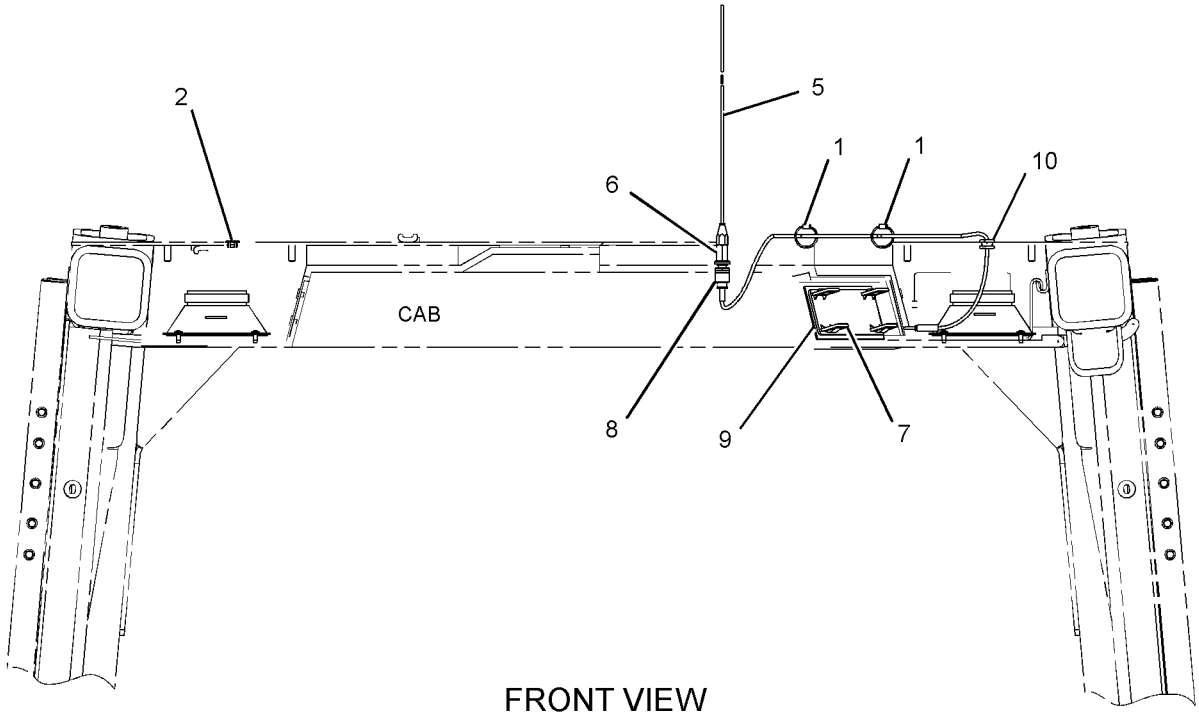

FRONT VIEW

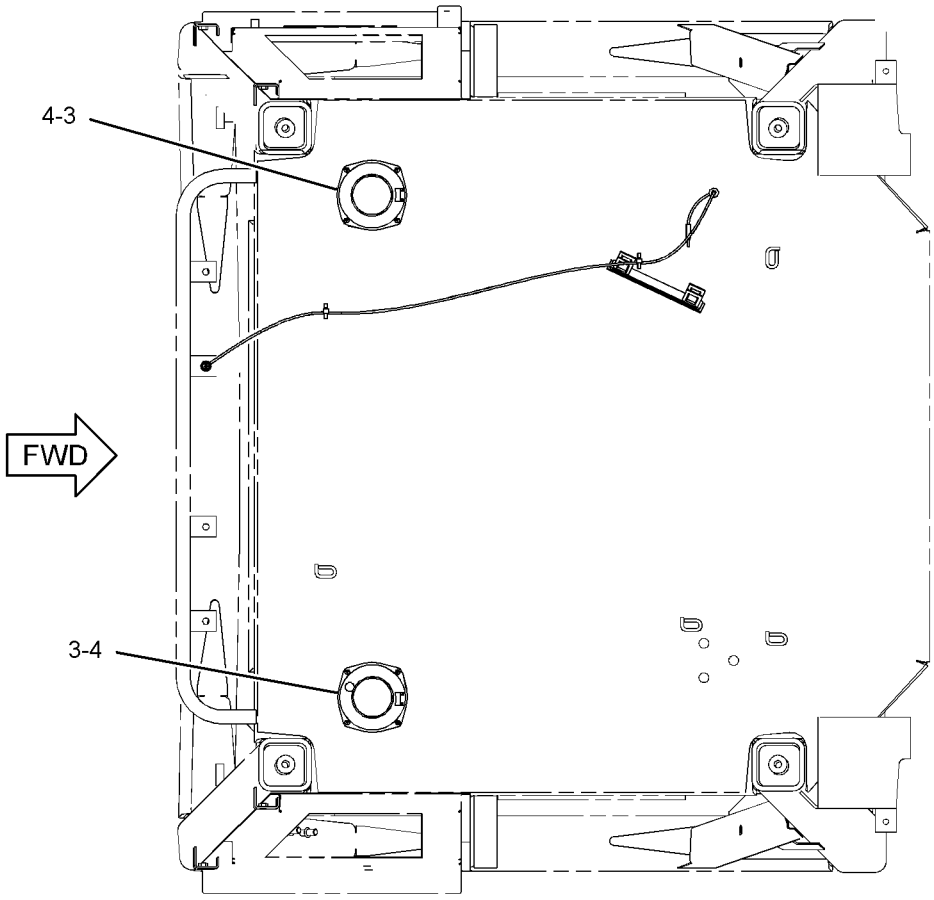

TOP VIEW

GRAPHIC #1 **<END>** g01856835

OPERATOR STATION

301-4899 INSTALLATION GP-RADIO

S/N: BXY1-UP

AN ATTACHMENT

SMCS-7338 **i03373900**

NOTE	REF NO	GRAPHIC REF	PART NUMBER	QTY	PART NAME 1 2 3 4 5 6 (PRODUCT LEVEL)	SEE PAGE
	1	1,2	**3S-2093**	4	STRAP-CABLE	
	2	2	**7K-1181**	1	STRAP-CABLE	
	3	1	**9U-2332**	2	ANTENNA AS (CB)	
	4	1	**9U-4431**	2	MOUNT-ANTENNA	
	5	1	**191-5114**	2	CABLE AS (COAX)	
	6	2	**208-3778**	1	BRACKET	
	7	2	**208-3779**	1	BRACKET AS	
	8	2	**209-0381**	1	CONVERTER-POWER (24-VOLT TO 12-VOLT)	
	9	1	**236-6253**	2	GROMMET	
	10	2	**236-7772**	1	HARNESS AS-RADIO	
		2	**102-8804**	3	KIT-RECEPTACLE (4-PIN)	
					(EACH KIT INCLUDES RECEPTACLE AS AND WEDGE)	
		2	**155-2271**	2	KIT-CONNECTING PLUG (4-PIN)	
		2	**155-2274**	1	KIT-CONNECTING PLUG (6-PIN)	
					(EACH KIT INCLUDES PLUG AS AND WEDGE)	
	11	1	**304-4173**	1	BRACKET	
	12	1	**122-8705**	1	U-BOLT	
M	13	2	**6V-7357**	4	BOLT (M6X1X25-MM)	
	14	2	**8T-0328**	4	WASHER-HARD (5.5X10X1-MM THK)	
	15	1	**8T-4121**	4	WASHER-HARD (11X21X2.5-MM THK)	
M	16	1,2	**8T-4133**	3	NUT (M10X1.5-THD)	
M	17	1	**8T-4136**	1	BOLT (M10X1.5X25-MM)	
	18	2	**9X-2498**	4	SCREW-HEX FLANGE (10-24X0.5-IN)	

M-METRIC PART

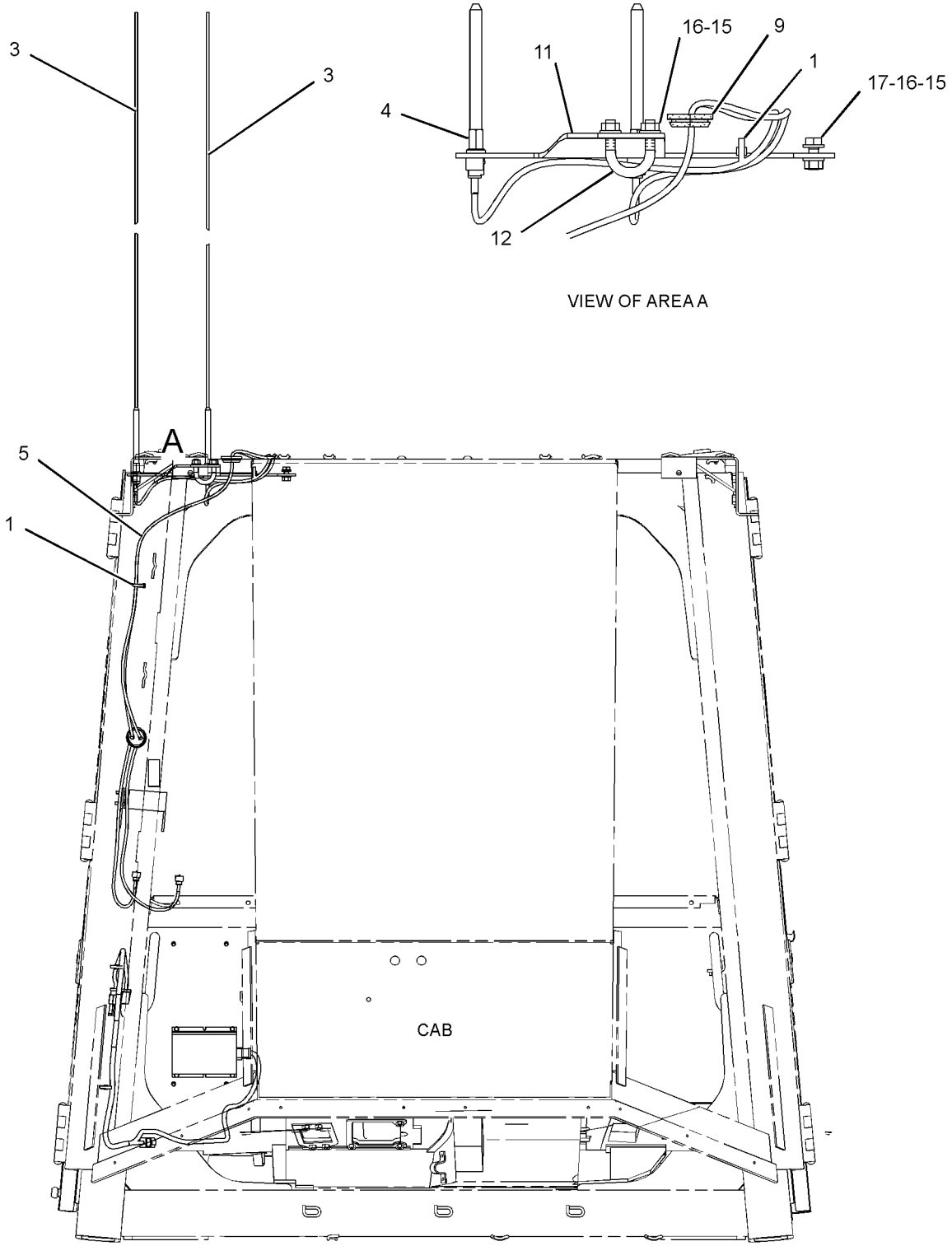

FRONT VIEW

GRAPHIC #1 g01902540

301-4899 **INSTALLATION GP-RADIO** *(contd.)* **i03373900**

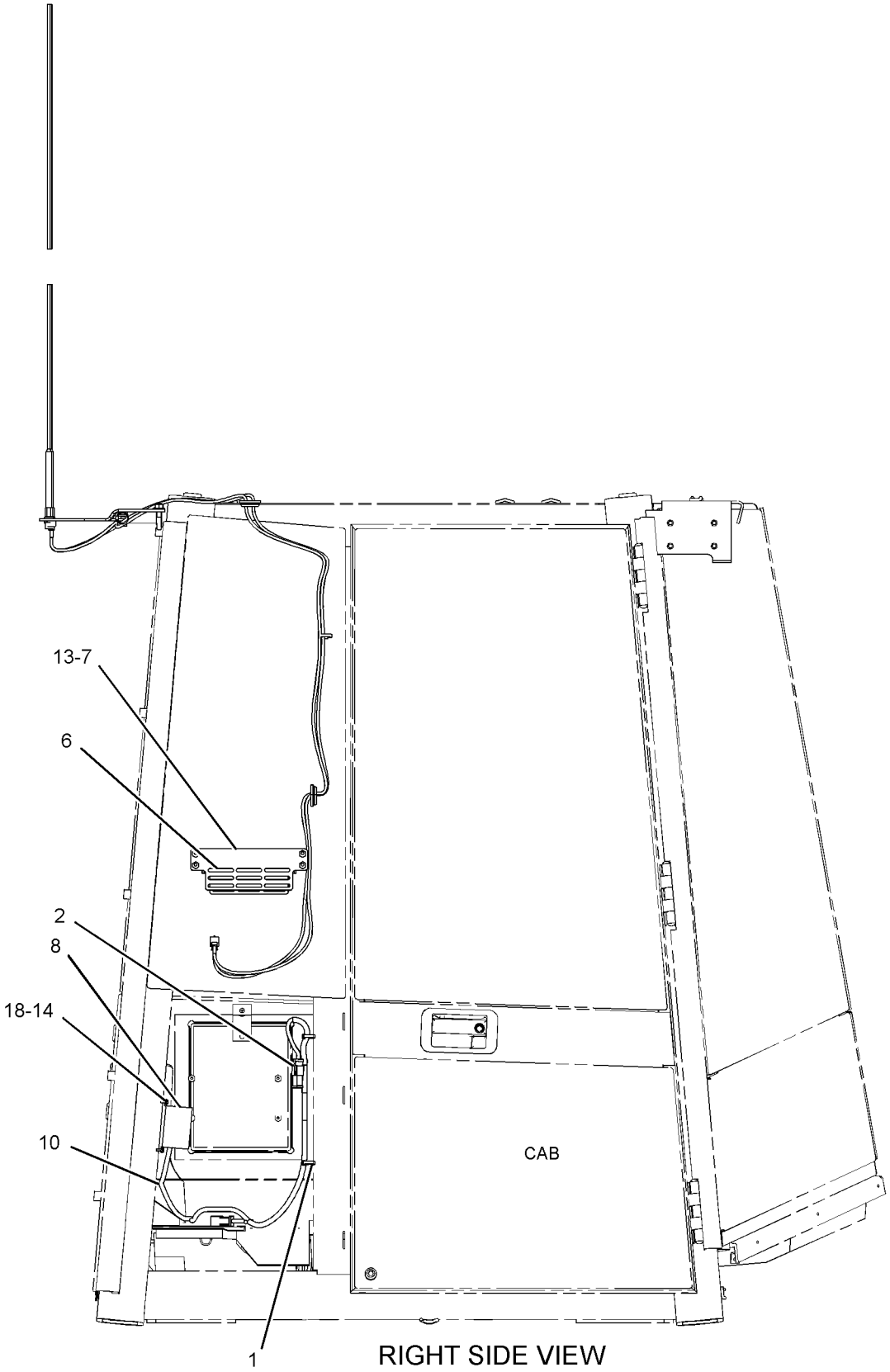

GRAPHIC #2 **<END>** g01902736

OPERATOR STATION

346-3842 INSTALLATION GP-RADIO

S/N: BXY4000-UP

AN ATTACHMENT

SMCS-7338 **i03795500**

NOTE	REF NO	GRAPHIC REF	PART NUMBER	QTY	PART NAME 1 2 3 4 5 6 (PRODUCT LEVEL)	SEE PAGE
	1	1	**136-5490**	1	BUSHING (RADIO MOUNT)	
	2	1	**200-5728**	1	HARNESS AS-RADIO	
		1	**8T-8737**	1	PLUG-SEAL	
		1	**160-3518**	1	KIT-RECEPTACLE (8-PIN)	
					(INCLUDES RECEPTACLE AS & WEDGE)	
		1	**172-8037**	1	CONNECTOR (RADIO)	
		1	**172-8039**	11	TERMINAL (RADIO)	
		1	**186-3735**	7	PIN-CONNECTOR (16-GA TO 18-GA)	
	3	1	**349-7701**	1	RADIO GP	
		1	**192-7054**	1	SLEEVE	

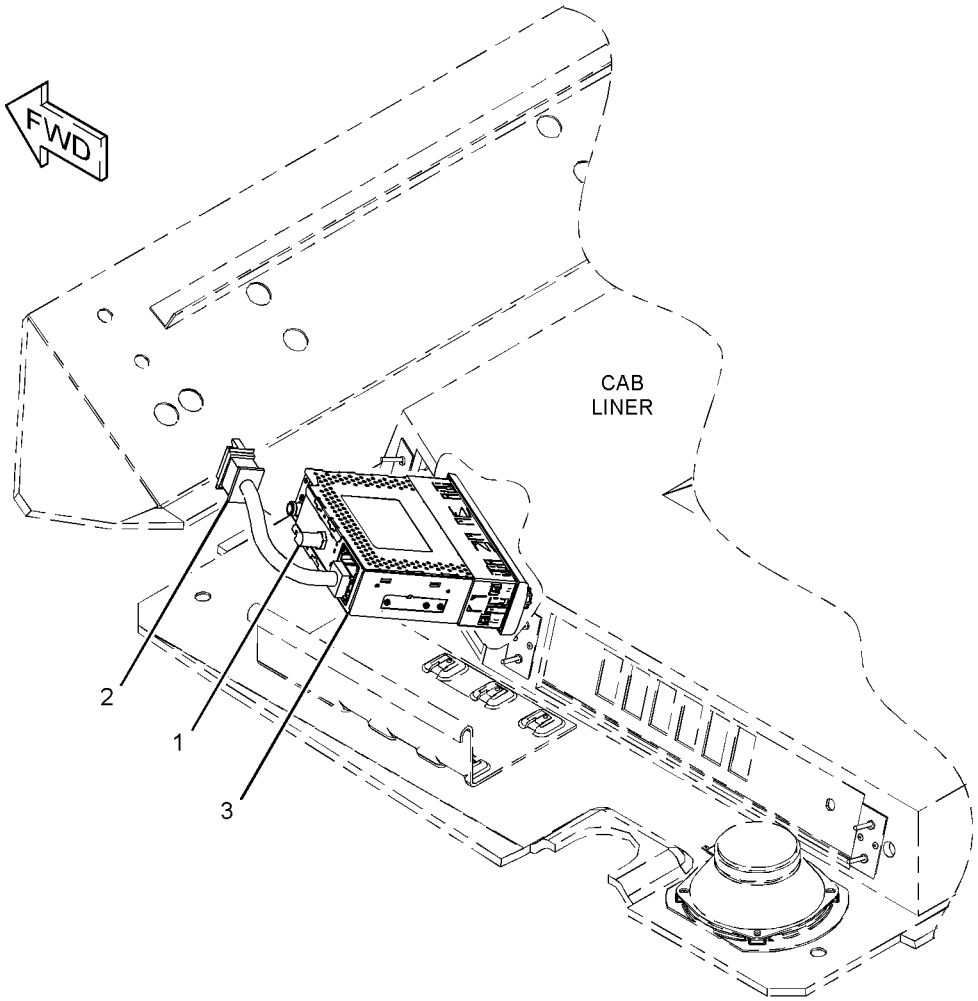

GRAPHIC #1 **<END>** g02064193

OPERATOR STATION

346-3843 INSTALLATION GP-RADIO

S/N: BXY4000-UP

AN ATTACHMENT

SMCS-7338 **i03795517**

NOTE	REF NO	GRAPHIC REF	PART NUMBER	QTY	PART NAME 1 2 3 4 5 6 (PRODUCT LEVEL)	SEE PAGE
	1	1	**136-5490**	1	BUSHING (RADIO MOUNT)	
	2	1	**200-5728**	1	HARNESS AS-RADIO	
		1	**8T-8737**	1	PLUG-SEAL	
		1	**160-3518**	1	KIT-RECEPTACLE (8-PIN)	
					(INCLUDES RECEPTACLE AS & WEDGE)	
		1	**172-8037**	1	CONNECTOR (RADIO)	
		1	**172-8039**	11	TERMINAL (RADIO)	
		1	**186-3735**	7	PIN-CONNECTOR (16-GA TO 18-GA)	
	3	1	**349-7704**	1	RADIO GP	
		1	**192-7054**	1	SLEEVE	
B	4	1	**349-8642**	1	MICROPHONE	
B	5	1	**353-1634**	1	HARNESS AS-RADIO	

B-USE AS REQUIRED

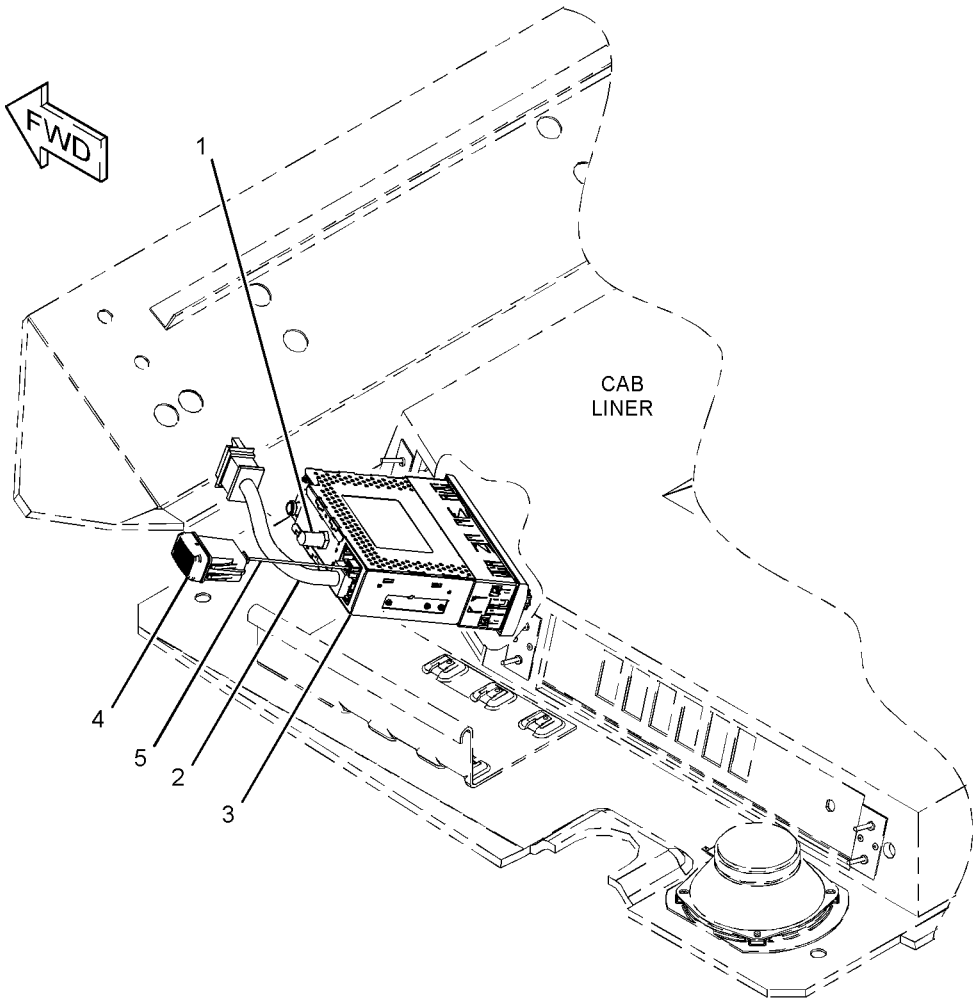

GRAPHIC #1 **<END>** g02066575

OPERATOR STATION

228-0920 LINER GP-CAB

S/N: BXY1-1899

PART OF 227-3190 CAB AR

SMCS-7329 **i02614915**

NOTE	REF NO	GRAPHIC REF	PART NUMBER	QTY	PART NAME 1 2 3 4 5 6 (PRODUCT LEVEL)	SEE PAGE
	1	1	**101-2867**	4	WASHER-HARD (7.2X25X2-MM THK)	
	2	1	**5P-7958**	1	SLEEVE-CABLE SPLICE	
	3	1	**6V-8928**	1	HOOK-COAT	
M	4	2	**6V-9606**	2	BOLT (M6X1X140-MM)	
M	5	1	**8T-7963**	8	LOCKNUT (M8X1.25-THD)	
	6	1,2	**9X-2038**	17	WASHER (7X19X2-MM THK)	
	7	2	**116-6810**	1	TRIM AS	
		2	**2R-2376**	2	WASHER (7X16X0.8-MM THK)	
		2	**7K-3262**	1	SCREW (THUMB)	
		2	**7K-4201**	1	NUT-SPEED	
		2	**8M-7758**	2	RIVET-POP	
		2	**123-5161**	1	DOOR	
	8	1	**8T-6842**	1	FILM-INSTRUCTION (PULL RING, ALTERNATE EXIT)	
	9	1	**120-8878**	1	INSULATION	
	10	1	**175-3064**	1	BRACKET	
	11	2	**123-2995**	1	PANEL	
	12	1	**124-8366**	4	ANGLE AS	
	13	1	**124-8368**	4	BRACKET AS	
M	14	1	**8T-4138**	2	BOLT (M6X1X20-MM)	
	15	1	**239-0282**	1	BRACKET AS	
M		1	**8T-3612**	8	NUT-WELD (M8X1.25-THD)	
M		1	**6V-9632**	4	NUT-WELD (M6X1-THD)	
	16	1	**160-9925**	1	LANYARD	
	17	1	**202-7652**	1	COVER AS	
	18	1	**161-3415**	1	STRAP	
	19	1	**164-7444**	2	STUD-BALL	
	20	1	**164-7959**	2	FITTING	
	21	1	**142-7442**	1	SPRING-GAS	
	22	2	**228-0919**	1	LINER AS-CAB	
M	23	1,2	**9X-2046**	9	SCREW-TRUSS HEAD (M6X1X35-MM)	
	24	2	**179-6051**	1	TRAY	
	25	1	**6V-8189**	2	NUT (5/16-18-THD)	
M	26	1	**7X-2535**	2	BOLT (M6X1X60-MM)	
	27	1	**8T-4121**	6	WASHER-HARD (11X21X2.5-MM THK)	
M	28	1	**8T-4195**	6	BOLT (M10X1.5X30-MM)	
	29	1,2	**8T-4205**	6	WASHER-HARD (7.2X14.5X2-MM THK)	
	30	1	**8T-4224**	9	WASHER-HARD (8.8X16X2-MM THK)	
M	31	1,2	**9X-2045**	13	SCREW-TRUSS HEAD (M6X1X20-MM)	
D	32	1	**5P-5637**	2	SEAL (0.23-M EACH)	
D	32A	1	**5P-5637**	2	SEAL (0.27-M EACH)	
M	33	1	**8T-5027**	5	NUT (M6X1-THD)	
M	34	1	**3E-8020**	4	SCREW-TRUSS HEAD (M6X1X25-MM)	

D-ORDER BY THE METER
M-METRIC PART

228-0920 **LINER GP-CAB** *(contd.)* **i02614915**

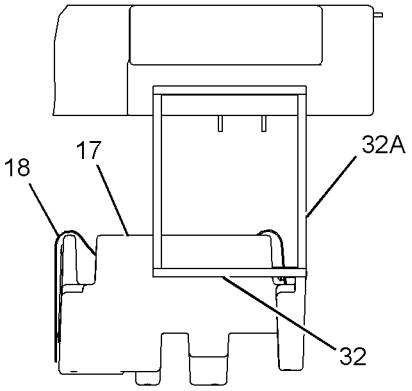

SECTION G-G

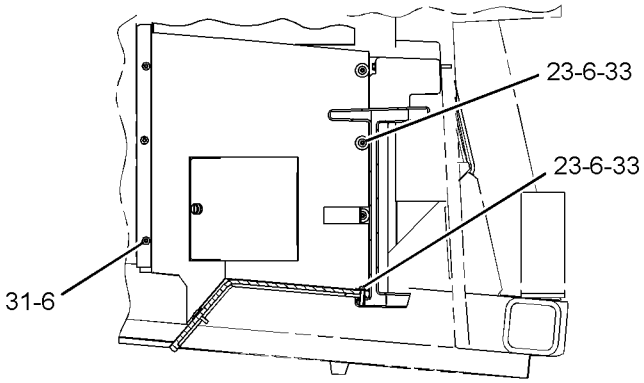

SECTION E-E

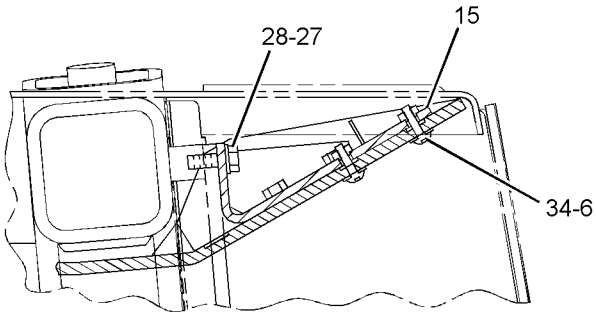

SECTION C-C

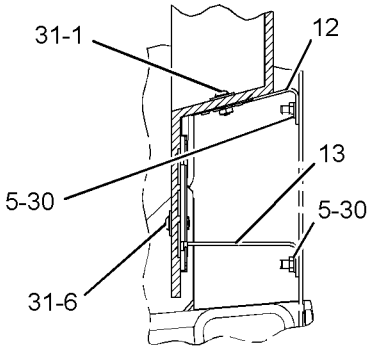

SECTION D-D

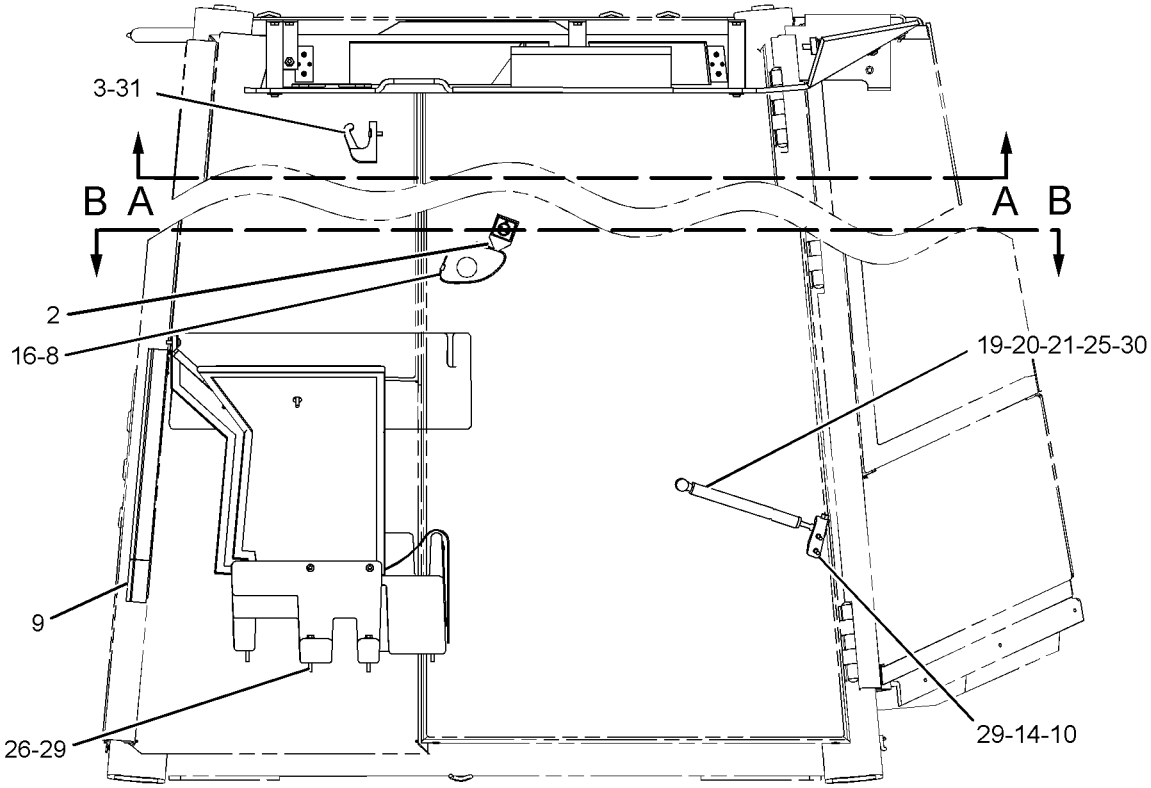

RIGHT SIDE VIEW

GRAPHIC #1 g01309666

228-0920 **LINER GP-CAB** *(contd.)* **i02614915**

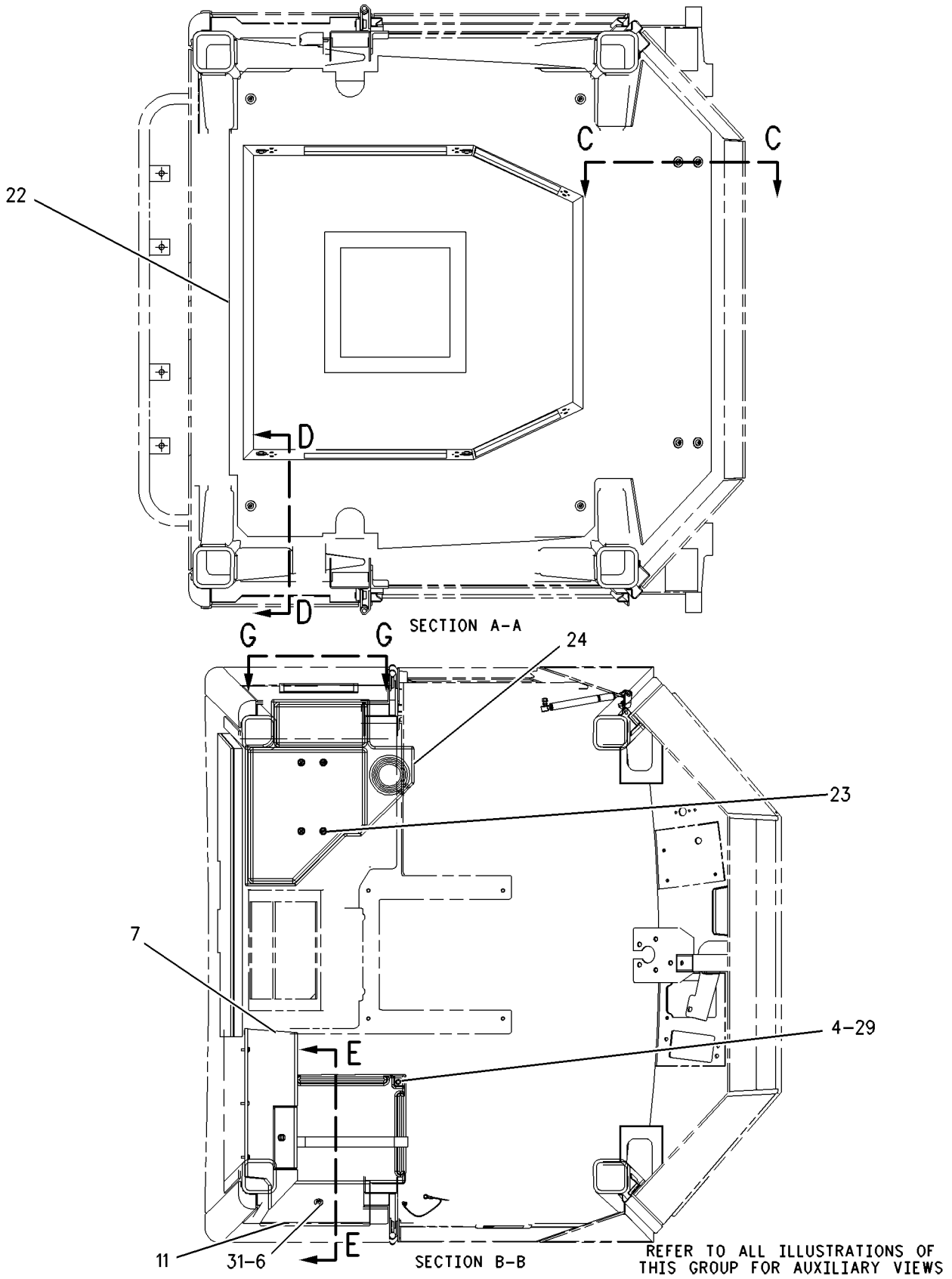

GRAPHIC #2 **<END>** g00776411

OPERATOR STATION

228-0920 LINER GP-CAB

S/N: BXY1900-UP
PART OF 292-6110, 308-2727, 346-3826 CAB AR
ALSO AN ATTACHMENT

SMCS-7329 **i03767931**

NOTE	REF NO	GRAPHIC REF	PART NUMBER	QTY	PART NAME 1 2 3 4 5 6 (PRODUCT LEVEL)	SEE PAGE
	1	2	**2R-2376**	2	WASHER (7X16X0.8-MM THK)	
	2	2	**6I-1418**	2	SPACER (8.2X12.7X28.7-MM THK)	
	3	1	**6V-8928**	1	HOOK-COAT	
M	4	2	**6V-9606**	2	BOLT (M6X1X140-MM)	
	5	1	**120-8878**	1	INSULATION	
	6	2	**123-2995**	1	PANEL	
	7	1	**124-8368**	4	BRACKET AS	
					(EACH INCLUDES)	
M		1	**6V-9632**	1	NUT-WELD (M6X1-THD)	
	8	2	**129-5224**	1	BRACKET AS	
M		2	**6V-9632**	1	NUT-WELD (M6X1-THD)	
	9	2	**142-7442**	2	SPRING-GAS	
	10	2	**161-3415**	1	STRAP	
	11	2	**164-7444**	4	STUD-BALL	
	12	2	**164-7959**	4	FITTING	
	13	2	**175-3064**	1	BRACKET	
	14	2	**179-6051**	1	TRAY	
	15	2	**202-7652**	1	COVER AS	
	16	1	**239-0282**	1	BRACKET AS	
M		1	**8T-3612**	8	NUT-WELD (M8X1.25-THD)	
M		1	**6V-9632**	4	NUT-WELD (M6X1-THD)	
	17	2	**274-2392**	1	THUMBSCREW	
	18	2	**309-5053**	1	BRACKET	
	19	1	**319-6149**	4	BRACKET AS	
	20	2	**321-5952**	1	TRIM AS	
		2	**7K-4201**	1	NUT-SPEED	
		2	**8M-7758**	2	RIVET-POP	
		2	**321-5920**	1	DOOR	
	21	1	**330-4984**	1	LINER AS-CAB	
C	22	1	**101-2867**	4	WASHER-HARD (7.2X25X2-MM THK)	
M	23	1	**131-3540**	8	LOCKNUT (M8X1.25-THD)	
M	24	1,2	**3E-8020**	17	SCREW-TRUSS HEAD (M6X1X25-MM)	
	25	1	**5P-4116**	8	WASHER-HARD (8.8X20.5X2-MM THK)	
	26	2	**6V-8189**	4	NUT (5/16-18-THD)	
M	27	2	**7X-0818**	2	BOLT (M8X1.25X45-MM)	
M	28	1	**7X-2535**	2	BOLT (M6X1X60-MM)	
C	29	1	**8D-6542**	1	GROMMET	
	30	1	**8T-4121**	6	WASHER-HARD (11X21X2.5-MM THK)	
M	31	2	**8T-4138**	4	BOLT (M6X1X20-MM)	
M	32	1	**8T-4195**	6	BOLT (M10X1.5X30-MM)	
	33	2	**8T-4205**	4	WASHER-HARD (7.2X14.5X2-MM THK)	
	34	2	**8T-4224**	2	WASHER-HARD (8.8X16X2-MM THK)	
	35	2	**9N-0869**	2	WASHER-HARD (8.8X25.5X2-MM THK)	
C	36	1,2	**9X-2038**	21	WASHER (7X19X2-MM THK)	
M	37	2	**9X-2046**	9	SCREW-TRUSS HEAD (M6X1X35-MM)	
D	38	2	**5P-5637**		SEAL (0.23-M EACH)	
D	38A	2	**5P-5637**		SEAL (0.27-M EACH)	

C-CHANGE FROM PREVIOUS TYPE
D-ORDER BY THE METER
M-METRIC PART

228-0920 **LINER GP-CAB** *(contd.)* **i03767931**

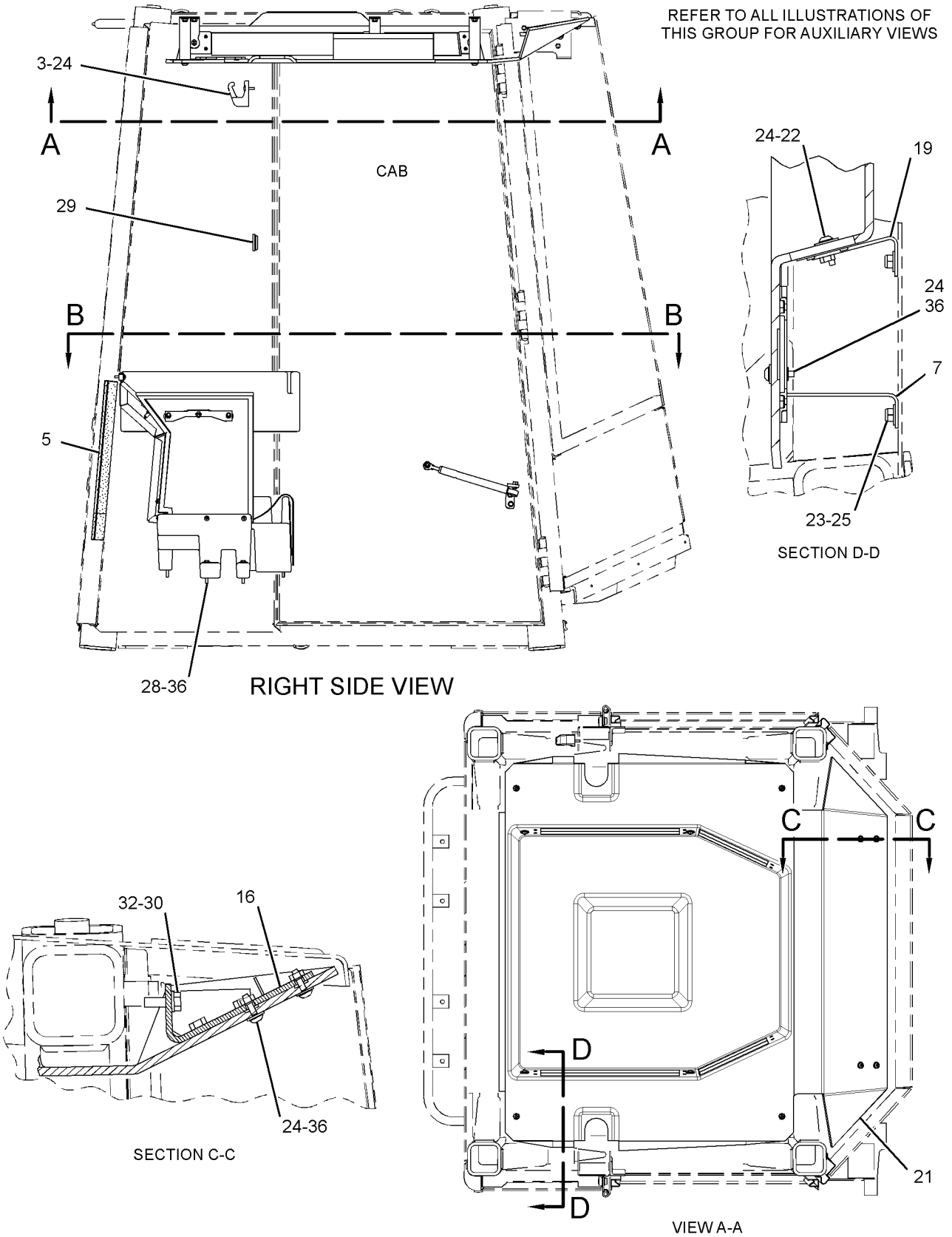

GRAPHIC #1 g02060195

228-0920 **LINER GP-CAB** *(contd.)* **i03767931**

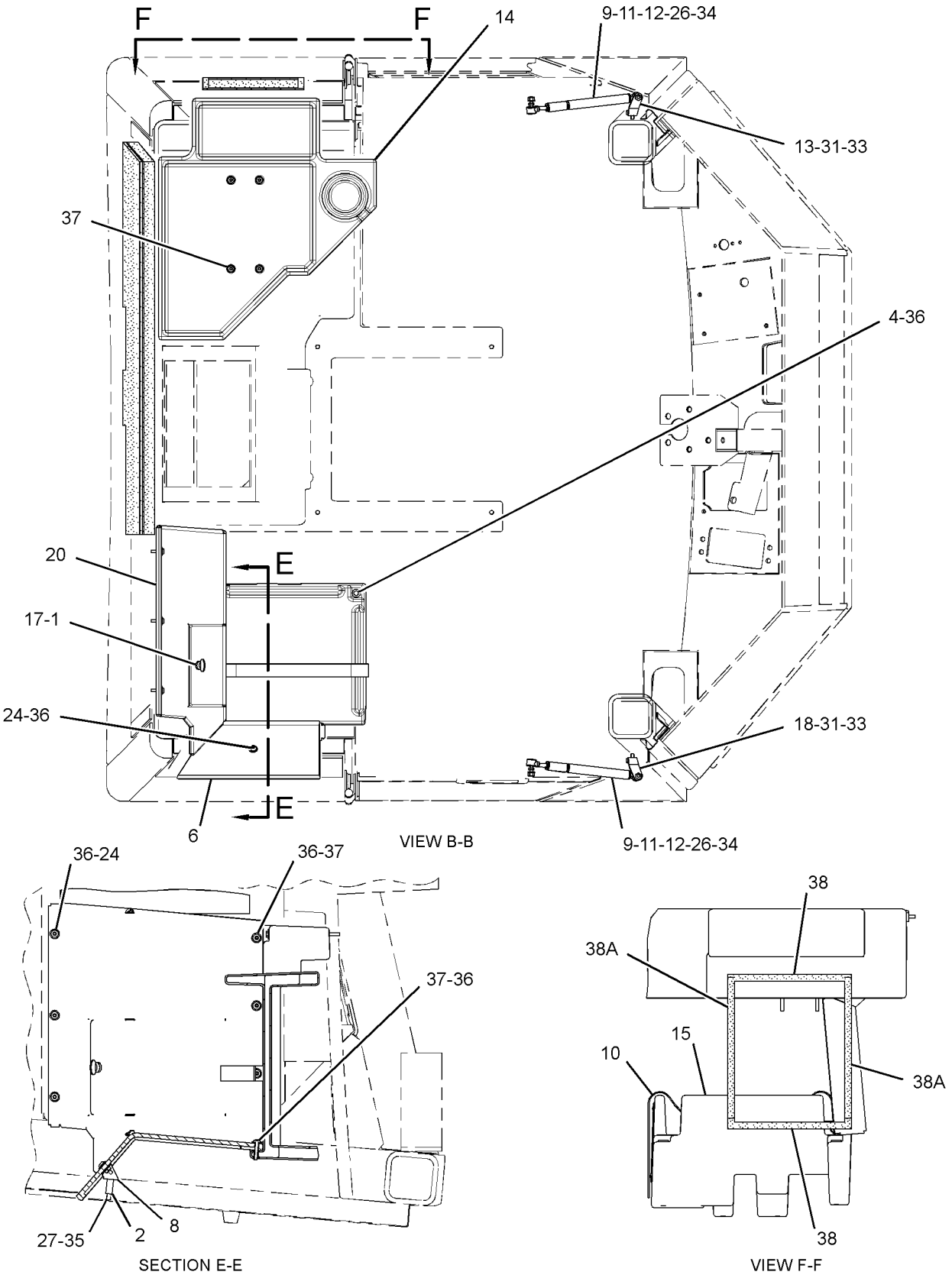

GRAPHIC #2 **<END>** g02060196

OPERATOR STATION

114-5142 LINES GP-AIR CONDITIONER

S/N: BXY1-771

PART OF 225-5432 CHASSIS AR

SMCS-1808 **i02312055**

NOTE	REF NO	GRAPHIC REF	PART NUMBER	QTY	PART NAME 1 2 3 4 5 6 (PRODUCT LEVEL)	SEE PAGE
	1	1	**175-7162**	1	RECEIVER GP-REFRIGERANT DRYER	
		1	**7X-2049**	1	TUBE AS-REFRIGERANT ORIFICE	
	2	1	**5P-3929**	1	COUPLING AS-REFRIGERANT	
		1	**8F-9206**	1	SEAL-O-RING	
		1	**107-4397**	1	VALVE AS	
C	3	1	**6D-1641**	5	CLIP	
	4	1	**103-6100**	2	FITTING AS-AIR CONDITIONER (QUICK DISCONNECT)	
					(EACH INCLUDES)	
		1	**9X-7382**	2	SEAL-O-RING	
	5	1	**116-6202**	2	BOOT	
I	6	1	**226-9613**	1	HOSE AS	
I	7	1	**141-4699**	1	HOSE AS	
	8	1	**149-2491**	1	FITTING AS-AIR CONDITIONER	
		1	**3E-4051**	1	CAP-SEAL (REFRIGERANT, LOW SIDE)	
		1	**3E-4057**	1	VALVE AS	
I	9	1	**183-8040**	1	HOSE AS	
	10	1	**186-6189**	1	ACCUMULATOR-REFRIGERANT	
C	11	1	**203-5443**	2	BRACKET AS	
					(EACH INCLUDES)	
M		1	**8T-3490**	1	NUT-WELD (M10X1.5-THD)	
CI	12	1	**203-5498**	1	HOSE AS	
CI	13	1	**203-5499**	1	HOSE AS	
C	14	1	**038-3967**	2	BRACKET	
C	15	1	**118-9902**	1	SPACER (12X20X43-MM THK)	
C	16	1	**162-3858**	1	SPACER (12X19X33.5-MM THK)	
	17	1	**1P-6356**	1	PLATE	
	18	1	**3E-4053**	1	FITTING AS-AIR CONDITIONER (FOR 10.32-MM ID)	
		1	**3E-4052**	1	CAP-SEAL (HIGH SIDE CHARGE PORT)	
		1	**3E-4058**	1	VALVE AS	
	19	1	**4K-8302**	1	CLIP	
	20	1	**5P-1076**	1	WASHER-HARD (13.5X30X4-MM THK)	
	21	1	**5P-3948**	1	COUPLING AS-REFRIGERANT	
		1	**7F-8607**	1	SEAL-O-RING	
		1	**107-4399**	1	VALVE AS	
C	22	1	**6V-1889**	4	CLIP	
	23	1	**6V-4356**	1	CLIP (SLOT)	
	24	1	**6V-4357**	1	CLIP (TAB)	
C	25	1	**7X-7729**	2	WASHER (11X25X3-MM THK)	
	26	1	**8M-2773**	6	CLIP	
	27	1	**8S-6109**	1	CLIP (SLOT)	
	28	1	**8S-6110**	1	CLIP (TAB)	
	29	1	**8T-2561**	1	WASHER-HARD (10.5X28.5X5-MM THK)	
C	30	1	**8T-4121**	23	WASHER-HARD (11X21X2.5-MM THK)	
CM	31	1	**8T-4133**	6	NUT (M10X1.5-THD)	
CM	32	1	**8T-4136**	5	BOLT (M10X1.5X25-MM)	
M	33	1	**8T-4137**	11	BOLT (M10X1.5X20-MM)	
M	34	1	**8T-4195**	2	BOLT (M10X1.5X30-MM)	
CM	35	1	**8T-5005**	1	BOLT (M10X1.5X70-MM)	
M	36	1	**8T-6466**	2	BOLT (M10X1.5X60-MM)	
	37	1	**9L-1775**	3	BRACKET	
C	38	1	**9M-8406**	2	CLIP	
	39	1	**9X-7380**	3	SEAL-O-RING	
	40	1	**9X-7381**	2	SEAL-O-RING	
	41	1	**9X-7382**	1	SEAL-O-RING	
	42	1	**9X-7383**	3	SEAL-O-RING	
	43	1	**9X-7384**	1	SEAL-O-RING	

114-5142 LINES GP-AIR CONDITIONER *(contd.)*

i02312055

NOTE	REF NO	GRAPHIC REF	PART NUMBER	QTY	PART NAME 1 2 3 4 5 6 (PRODUCT LEVEL)	SEE PAGE
D	44	1	**6V-2495**		SEAL (.3 M)	

C-CHANGE FROM PREVIOUS TYPE
D-ORDER BY THE METER
I-REFER TO HYDRAULIC INFORMATION SYSTEM
M-METRIC PART

114-5142 LINES GP-AIR CONDITIONER *(contd.)* i02312055

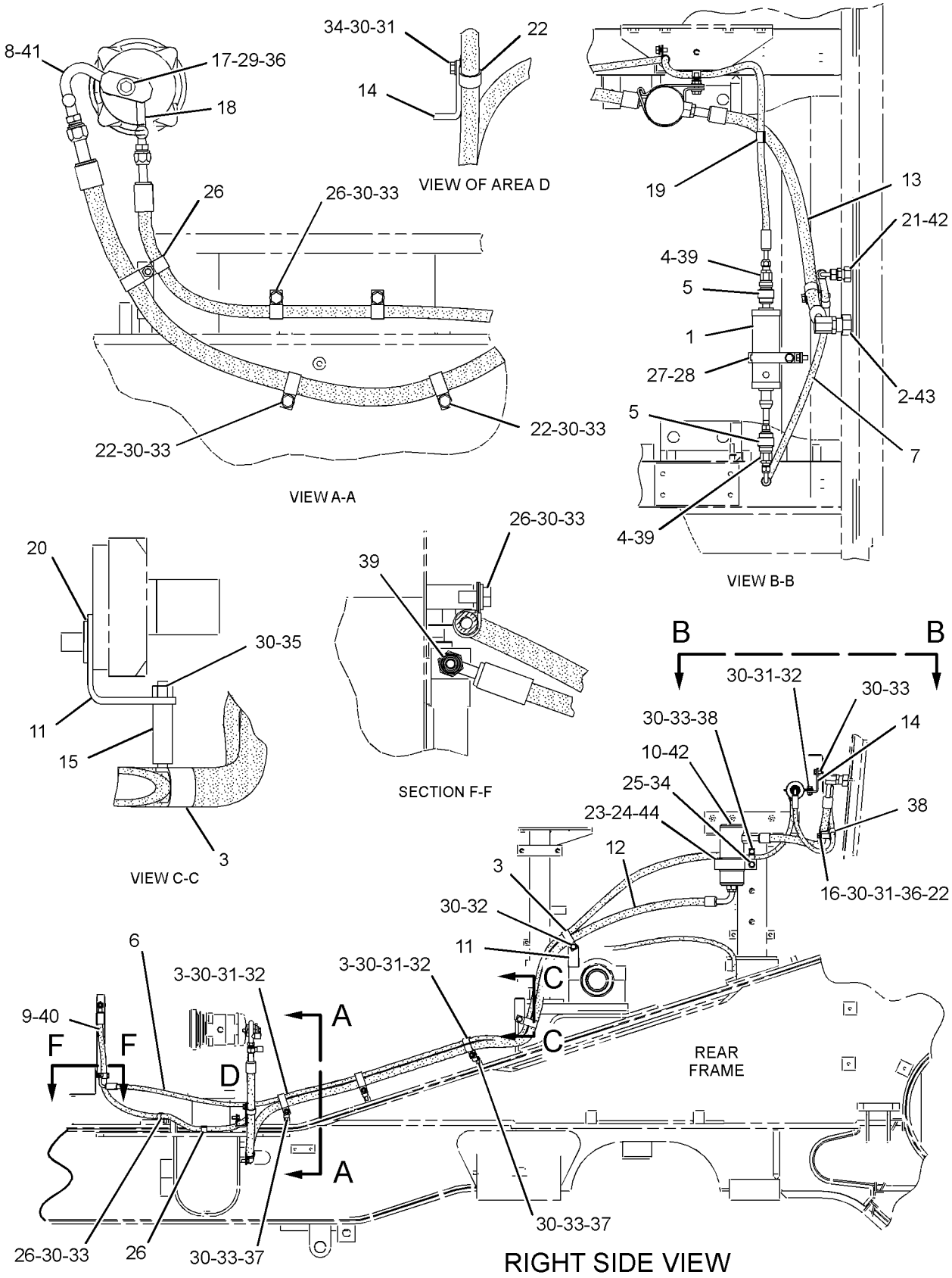

GRAPHIC #1 **<END>** g01157864

OPERATOR STATION

114-5142 LINES GP-AIR CONDITIONER

S/N: BXY772-2598

PART OF 225-5432, 284-2735 CHASSIS AR

SMCS-1808 **i03083257**

NOTE	REF NO	GRAPHIC REF	PART NUMBER	QTY	PART NAME 1 2 3 4 5 6 (PRODUCT LEVEL)	SEE PAGE
	1	2	**5P-3929**	1	COUPLING AS-REFRIGERANT	
		2	**8F-9206**	1	SEAL-O-RING	
		2	**107-4397**	1	VALVE AS	
	2	1	**149-2491**	1	FITTING AS-AIR CONDITIONER	
		1	**3E-4051**	1	CAP-SEAL (REFRIGERANT, LOW SIDE)	
		1	**3E-4057**	1	VALVE AS	
C	3	1	**160-0564**	1	BRACKET AS	
I	4	1	**183-8040**	1	HOSE AS	
	5	1	**186-6189**	1	ACCUMULATOR-REFRIGERANT	
	6	1,2	**203-5443**	2	BRACKET AS	
CI	7	1	**246-2293**	1	HOSE AS	
CI	8	1	**246-2294**	1	HOSE AS	
C	9	2	**257-3226**	1	RECEIVER-REFRIGERANT DRYER	
		2	**187-1707**	1	TUBE AS-AIR	
C	10	1	**264-1440**	1	FITTING AS-AIR CONDITIONER	
CI	11	2	**266-4234**	1	HOSE AS	
CI	12	2	**266-4236**	1	HOSE AS	
	13	1	**038-3967**	2	BRACKET	
	14	2	**118-9902**	1	SPACER (12X20X43-MM THK)	
C	15	1,2	**130-9984**	6	CLIP	
	16	1	**1P-6356**	1	PLATE	
	17	1	**3E-4053**	1	FITTING AS-AIR CONDITIONER (FOR 10.32-MM ID)	
		1	**3E-4052**	1	CAP-SEAL (HIGH SIDE CHARGE PORT)	
		1	**3E-4058**	1	VALVE AS	
	18	2	**4K-8302**	1	CLIP	
	19	2	**5P-1076**	1	WASHER-HARD (13.5X30X4-MM THK)	
	20	2	**5P-3948**	1	COUPLING AS-REFRIGERANT	
		2	**7F-8607**	1	SEAL-O-RING	
		2	**107-4399**	1	VALVE AS	
	21	1,2	**6V-1889**	3	CLIP	
	22	1	**6V-4356**	1	CLIP (SLOT)	
	23	1	**6V-4357**	1	CLIP (TAB)	
C	24	1	**7X-7729**	1	WASHER (11X25X3-MM THK)	
	25	1,2	**8M-2773**	6	CLIP	
	26	2	**8S-6109**	1	CLIP (SLOT)	
	27	2	**8S-6110**	1	CLIP (TAB)	
	28	1	**8T-2561**	1	WASHER-HARD (10.5X28.5X5-MM THK)	
C	29	1,2	**8T-4121**	22	WASHER-HARD (11X21X2.5-MM THK)	
M	30	1,2	**8T-4133**	5	NUT (M10X1.5-THD)	
CM	31	1,2	**8T-4136**	3	BOLT (M10X1.5X25-MM)	
M	32	1,2	**8T-4137**	11	BOLT (M10X1.5X20-MM)	
CM	33	1	**8T-4195**	5	BOLT (M10X1.5X30-MM)	
M	34	2	**8T-5005**	1	BOLT (M10X1.5X70-MM)	
M	35	1	**8T-6466**	1	BOLT (M10X1.5X60-MM)	
	36	1,2	**9L-1775**	3	BRACKET	
	37	1	**9M-8406**	1	CLIP	
C	38	1,2	**9X-7380**	2	SEAL-O-RING	
C	39	1,2	**9X-7381**	3	SEAL-O-RING	
	40	1	**9X-7382**	1	SEAL-O-RING	
C	41	1,2	**9X-7383**	4	SEAL-O-RING	
	42	2	**9X-7384**	1	SEAL-O-RING	
D	43	1	**6V-2495**		SEAL (0.3-M)	
	44	1	**108-9422**	1	BRACKET AS	
M		1	**8T-3490**	1	NUT-WELD (M10X1.5-THD)	

114-5142 LINES GP-AIR CONDITIONER *(contd.)* i03083257

C-CHANGE FROM PREVIOUS TYPE
D-ORDER BY THE METER
I-REFER TO HYDRAULIC INFORMATION SYSTEM
M-METRIC PART

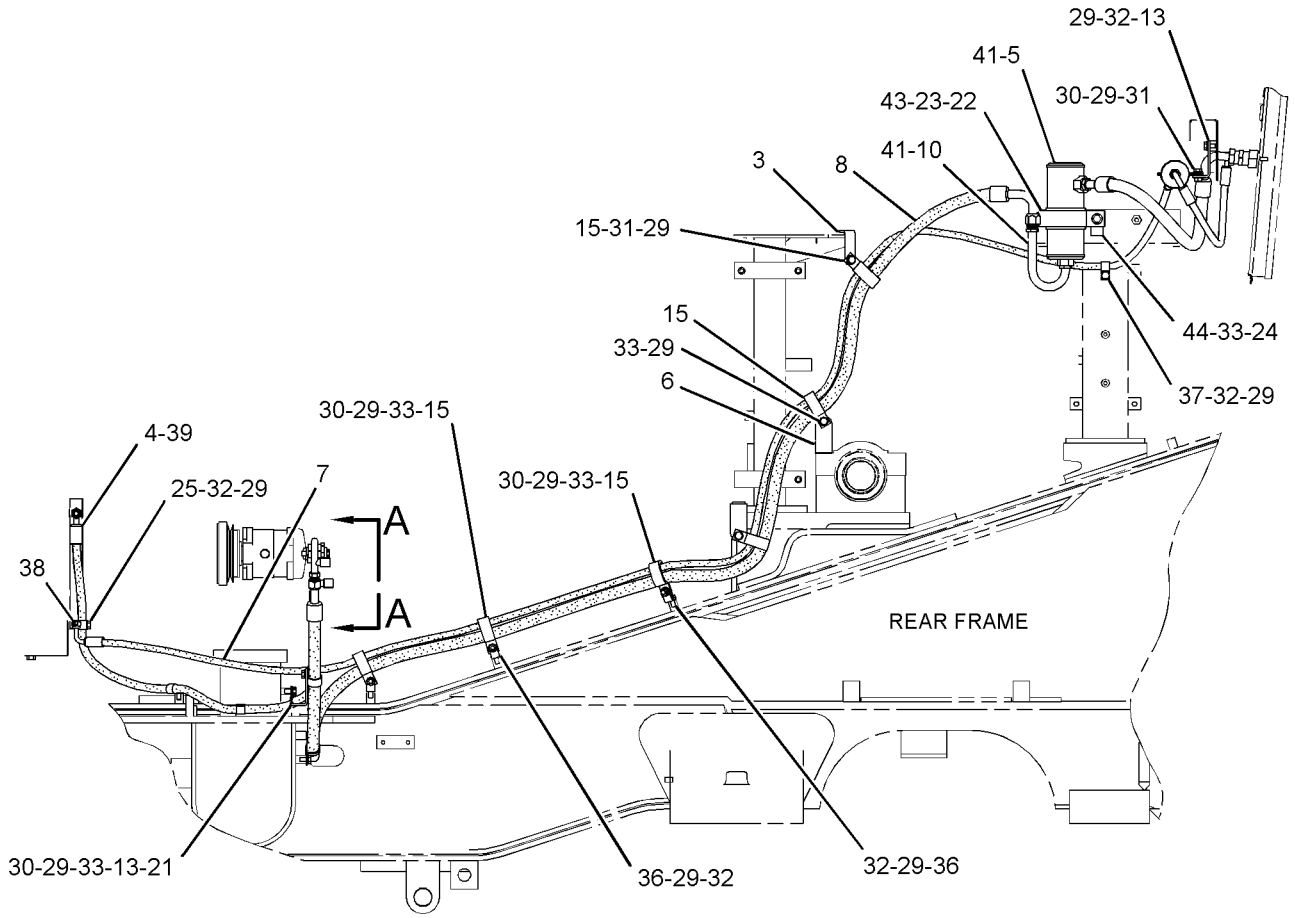

RIGHT SIDE VIEW

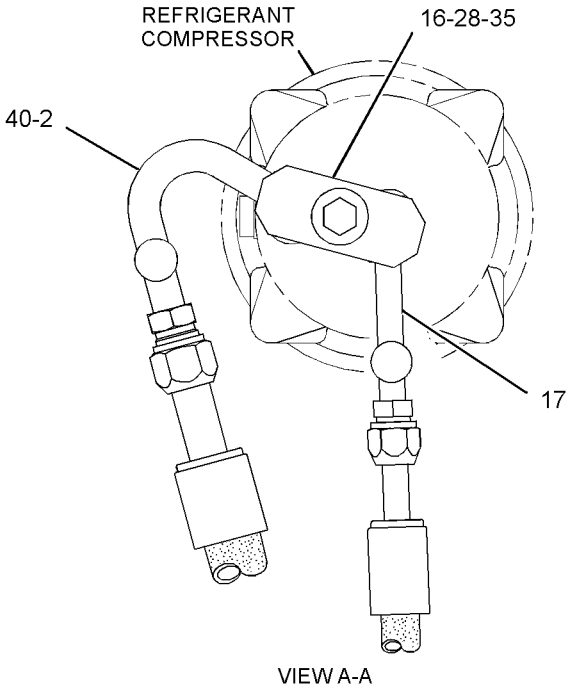

VIEW A-A

GRAPHIC #1 g01605655

114-5142 LINES GP-AIR CONDITIONER *(contd.)* i03083257

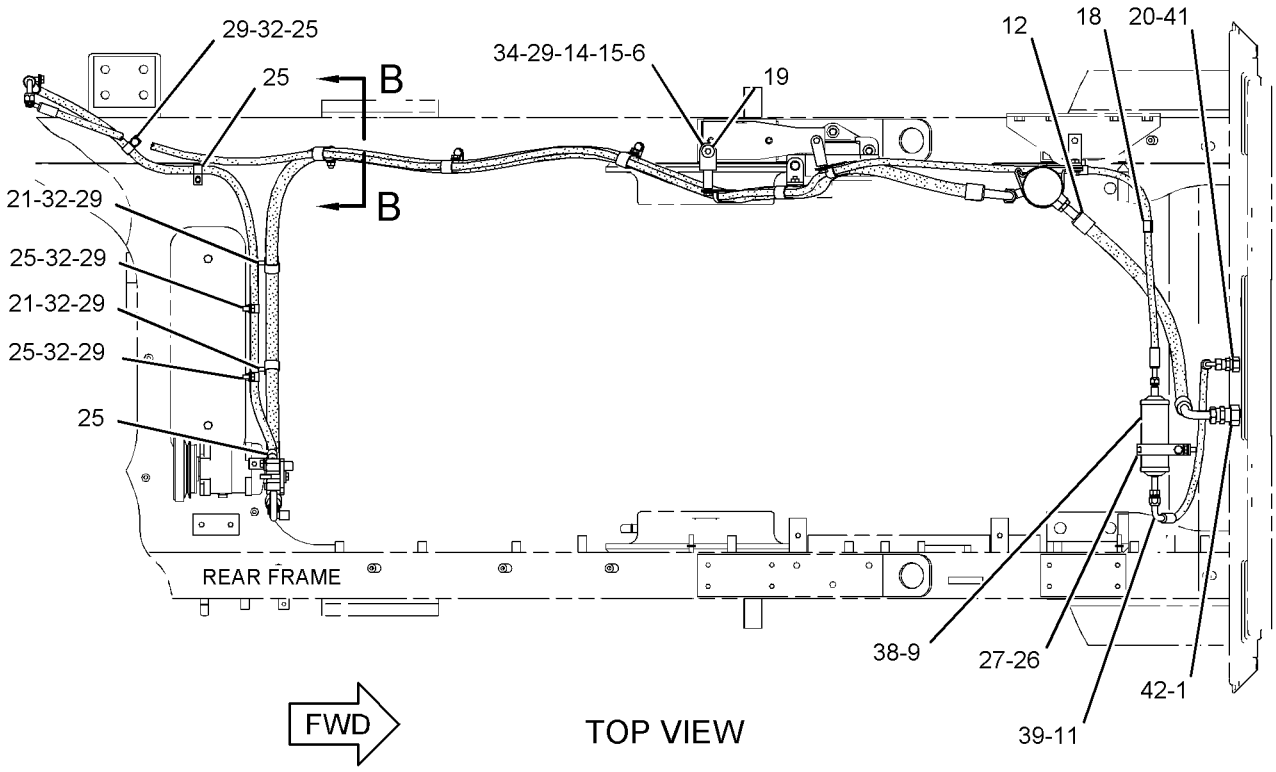

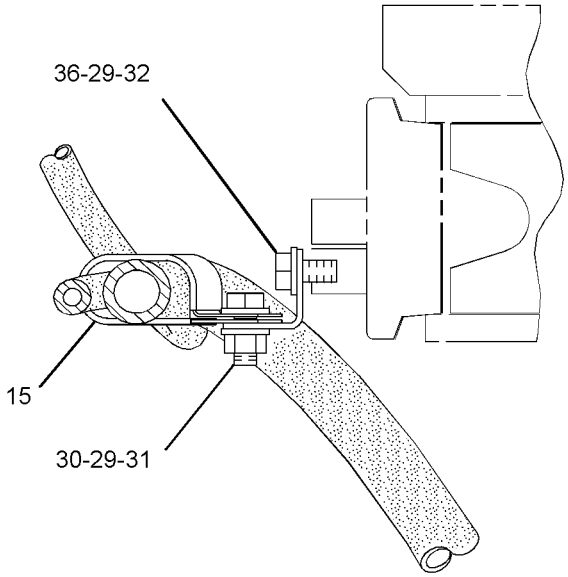

SECTION B-B

GRAPHIC #2 **<END>** g01605656

OPERATOR STATION

114-5142 LINES GP-AIR CONDITIONER

S/N: BXY2599-3999

PART OF 284-2735 CHASSIS AR

SMCS-1808 **i03210541**

NOTE	REF NO	GRAPHIC REF	PART NUMBER	QTY	PART NAME 1 2 3 4 5 6 (PRODUCT LEVEL)	SEE PAGE
	1	2	**5P-3929**	1	COUPLING AS-REFRIGERANT	
		2	**8F-9206**	1	SEAL-O-RING	
		2	**107-4397**	1	VALVE AS	
	2	1	**149-2491**	1	FITTING AS-AIR CONDITIONER	
		1	**3E-4051**	1	CAP-SEAL (REFRIGERANT, LOW SIDE)	
		1	**3E-4057**	1	VALVE AS	
	3	1	**160-0564**	1	BRACKET AS	
I	4	1	**183-8040**	1	HOSE AS	
	5	1	**186-6189**	1	ACCUMULATOR-REFRIGERANT	
	6	1,2	**203-5443**	2	BRACKET AS	
I	7	1	**246-2293**	1	HOSE AS	
I	8	1	**246-2294**	1	HOSE AS	
	9	2	**257-3226**	1	RECEIVER-REFRIGERANT DRYER	
		2	**189-1707**	1	ORIFICE AS-AIR CONDITIONER	
	10	1	**264-1440**	1	FITTING AS-AIR CONDITIONER	
I	11	2	**266-4234**	1	HOSE AS	
CI	12	2	**329-4997**	1	HOSE AS	
	13	1	**038-3967**	2	BRACKET	
	14	2	**118-9902**	1	SPACER (12X20X43-MM THK)	
	15	1,2	**130-9984**	6	CLIP	
	16	1	**1P-6356**	1	PLATE	
	17	1	**3E-4053**	1	FITTING AS-AIR CONDITIONER (FOR 10.32-MM ID)	
		1	**3E-4052**	1	CAP-SEAL (HIGH SIDE CHARGE PORT)	
		1	**3E-4058**	1	VALVE AS	
	18	2	**4K-8302**	1	CLIP	
	19	2	**5P-1076**	1	WASHER-HARD (13.5X30X4-MM THK)	
	20	2	**5P-3948**	1	COUPLING AS-REFRIGERANT	
		2	**7F-8607**	1	SEAL-O-RING	
		2	**107-4399**	1	VALVE AS	
	21	1,2	**6V-1889**	3	CLIP	
	22	1	**6V-4356**	1	CLIP (SLOT)	
	23	1	**6V-4357**	1	CLIP (TAB)	
	24	1	**7X-7729**	1	WASHER (11X25X3-MM THK)	
	25	1,2	**8M-2773**	6	CLIP	
	26	2	**8S-6109**	1	CLIP (SLOT)	
	27	2	**8S-6110**	1	CLIP (TAB)	
	28	1	**8T-2561**	1	WASHER-HARD (10.5X28.5X5-MM THK)	
	29	1,2	**8T-4121**	22	WASHER-HARD (11X21X2.5-MM THK)	
M	30	1,2	**8T-4133**	5	NUT (M10X1.5-THD)	
M	31	1,2	**8T-4136**	3	BOLT (M10X1.5X25-MM)	
M	32	1,2	**8T-4137**	11	BOLT (M10X1.5X20-MM)	
M	33	1	**8T-4195**	5	BOLT (M10X1.5X30-MM)	
M	34	2	**8T-5005**	1	BOLT (M10X1.5X70-MM)	
M	35	1	**8T-6466**	1	BOLT (M10X1.5X60-MM)	
	36	1,2	**9L-1775**	3	BRACKET	
	37	1	**9M-8406**	1	CLIP	
	38	1,2	**9X-7380**	2	SEAL-O-RING	
	39	1,2	**9X-7381**	3	SEAL-O-RING	
	40	1	**9X-7382**	1	SEAL-O-RING	
	41	1,2	**9X-7383**	4	SEAL-O-RING	
	42	2	**9X-7384**	1	SEAL-O-RING	
D	43	1	**6V-2495**		SEAL (0.3-M)	
	44	1	**108-9422**	1	BRACKET AS	
M		1	**8T-3490**	1	NUT-WELD (M10X1.5-THD)	

114-5142 LINES GP-AIR CONDITIONER *(contd.)* i03210541

C-CHANGE FROM PREVIOUS TYPE
D-ORDER BY THE METER
I-REFER TO HYDRAULIC INFORMATION SYSTEM
M-METRIC PART

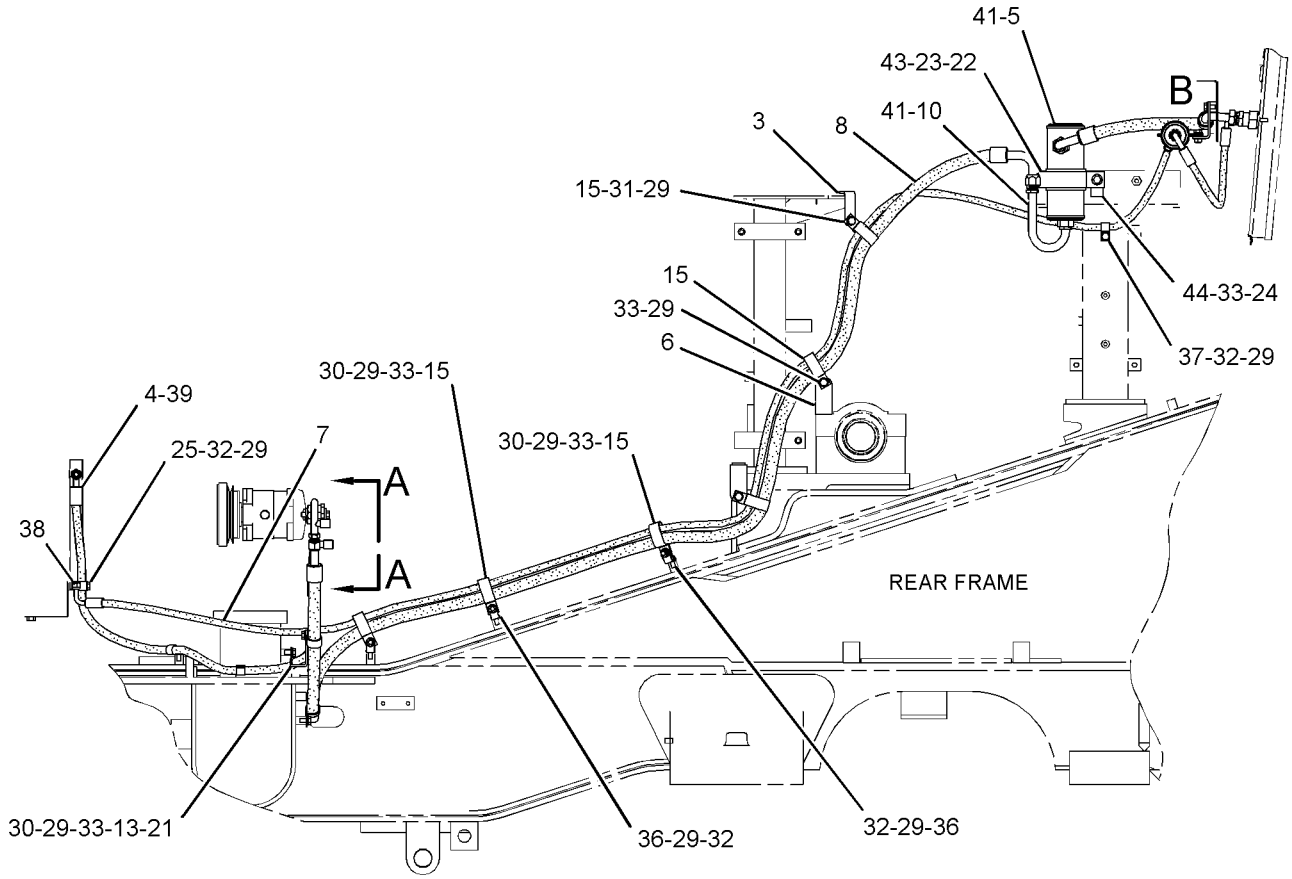

RIGHT SIDE VIEW

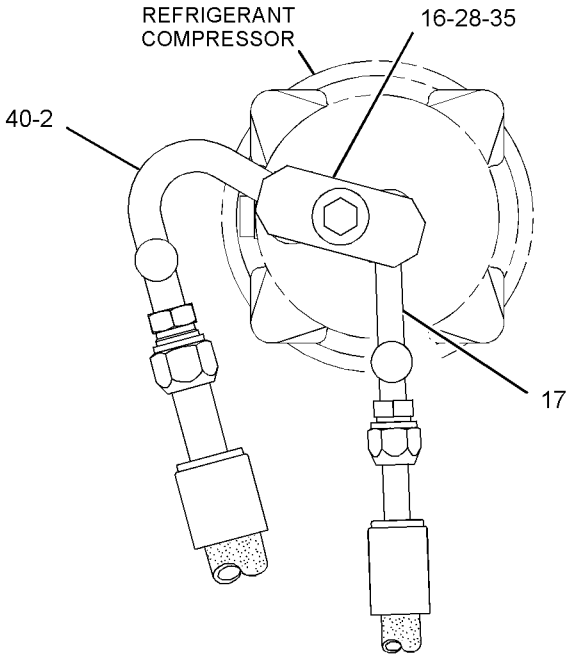

VIEW A-A

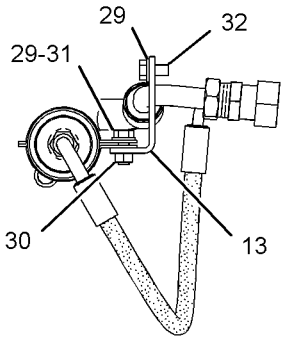

VIEW OF AREA B

GRAPHIC #1 g01865554

114-5142 LINES GP-AIR CONDITIONER *(contd.)* i03210541

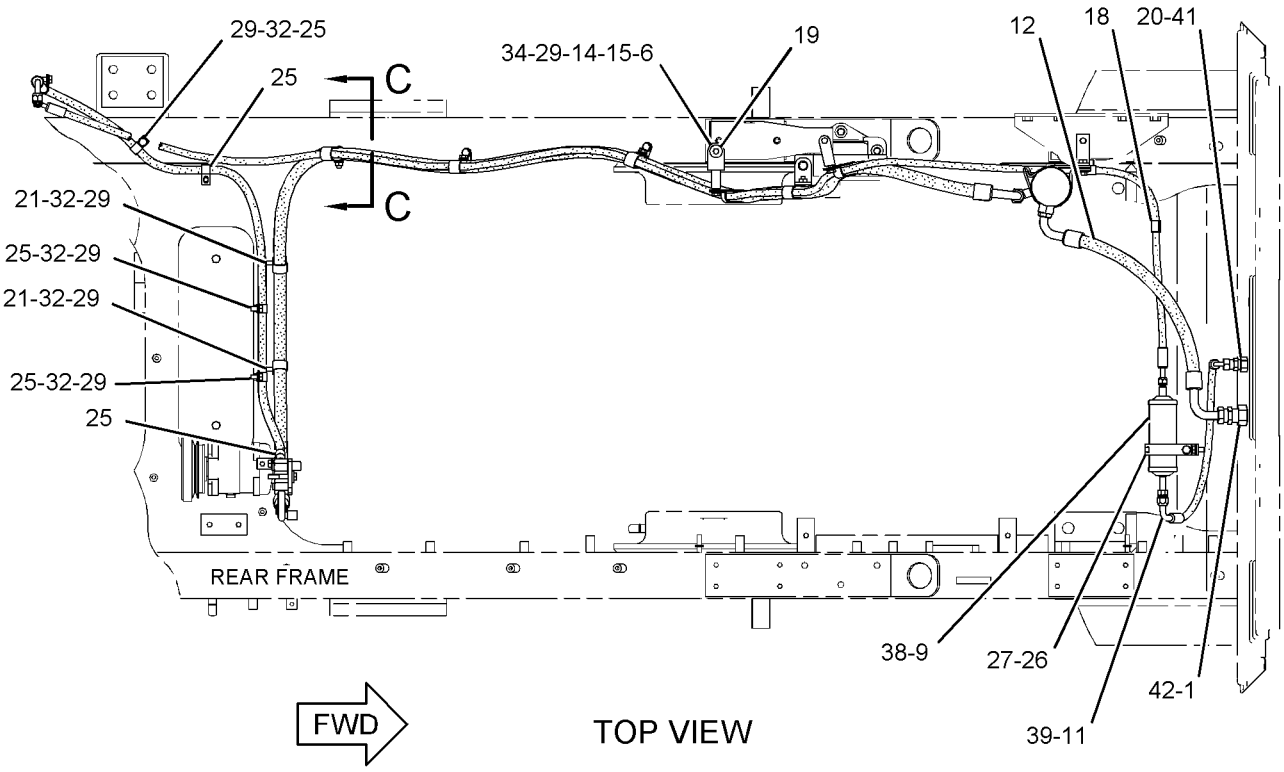

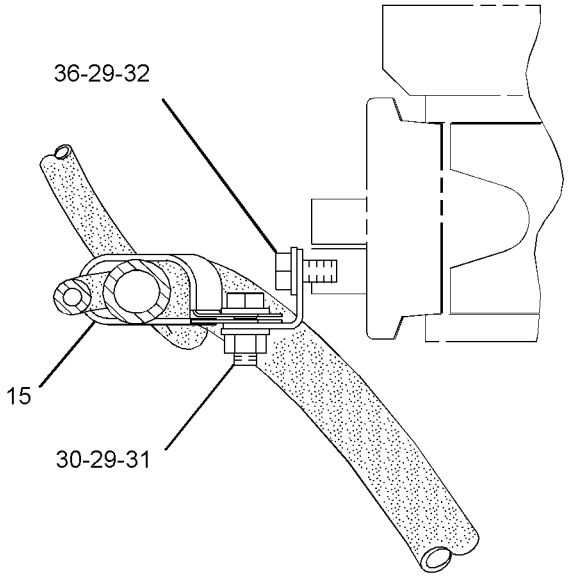

SECTION C-C

GRAPHIC #2 **<END>** g01861895

OPERATOR STATION

114-5142 LINES GP-AIR CONDITIONER

S/N: BXY4000-UP

PART OF 284-2735 CHASSIS AR

SMCS-1808 **i03775505**

NOTE	REF NO	GRAPHIC REF	PART NUMBER	QTY	PART NAME 1 2 3 4 5 6 (PRODUCT LEVEL)	SEE PAGE
	1	2	**5P-3929**	1	COUPLING AS-REFRIGERANT	
		2	**8F-9206**	1	SEAL-O-RING	
		2	**107-4397**	1	VALVE AS	
	2	2	**108-9422**	1	BRACKET AS	
M		2	**8T-3490**	1	NUT-WELD (M10X1.5-THD)	
C	3	2	**121-1343**	1	PLATE AS	
M		2	**8T-3490**	1	NUT-WELD (M10X1.5-THD)	
	4	2	**160-0564**	1	BRACKET AS	
M		2	**8T-3490**	1	NUT-WELD (M10X1.5-THD)	
	5	2	**186-6189**	1	ACCUMULATOR-REFRIGERANT	
	6	1,2	**203-5443**	2	BRACKET AS	
I	7	1	**246-2293**	1	HOSE AS	
I	8	1	**246-2294**	1	HOSE AS	
	9	2	**257-3226**	1	RECEIVER-REFRIGERANT DRYER	
		2	**189-1707**	1	ORIFICE AS-AIR CONDITIONER	
	10	2	**264-1440**	1	FITTING AS-AIR CONDITIONER	
I	11	2	**266-4234**	1	HOSE AS	
C	12	1	**304-2740**	1	MANIFOLD AS (AIR CONDITIONER)	
I	13	2	**329-4997**	1	HOSE AS	
C	14	1	**347-4784**	1	HOSE AS	
C	15	2	**038-3967**	1	BRACKET	
	16	1	**118-9902**	1	SPACER (12X20X43-MM THK)	
	17	1,2	**130-9984**	6	CLIP	
	18	1	**5P-1076**	1	WASHER-HARD (13.5X30X4-MM THK)	
	19	2	**5P-3948**	1	COUPLING AS-REFRIGERANT	
		2	**7F-8607**	1	SEAL-O-RING	
		2	**107-4399**	1	VALVE AS	
C	20	1	**6V-1889**	2	CLIP	
	21	2	**6V-4356**	1	CLIP (SLOT)	
	22	2	**6V-4357**	1	CLIP (TAB)	
	23	2	**7X-7729**	1	WASHER (11X25X3-MM THK)	
	24	1	**8M-2773**	6	CLIP	
	25	2	**8S-6109**	1	CLIP (SLOT)	
	26	2	**8S-6110**	1	CLIP (TAB)	
	27	1	**8T-2561**	1	WASHER-HARD (10.5X28.5X5-MM THK)	
	28	1,2	**8T-4121**	22	WASHER-HARD (11X21X2.5-MM THK)	
CM	29	1,2	**8T-4133**	4	NUT (M10X1.5-THD)	
M	30	1,2	**8T-4136**	3	BOLT (M10X1.5X25-MM)	
CM	31	1,2	**8T-4137**	12	BOLT (M10X1.5X20-MM)	
CM	32	1,2	**8T-4195**	4	BOLT (M10X1.5X30-MM)	
M	33	1	**8T-5005**	1	BOLT (M10X1.5X70-MM)	
M	34	1	**8T-6466**	1	BOLT (M10X1.5X60-MM)	
	35	1	**9L-1775**	3	BRACKET	
C	36	2	**9M-8406**	2	CLIP	
	37	1,2	**9X-7380**	2	SEAL-O-RING	
	38	1,2	**9X-7381**	3	SEAL-O-RING	
C	39	1,2	**9X-7383**	5	SEAL-O-RING	
	40	2	**9X-7384**	1	SEAL-O-RING	
C	41	1	**9X-7385**	2	SEAL-O-RING	
D	42	2	**6V-2495**		SEAL (0.3-M)	

C-CHANGE FROM PREVIOUS TYPE
D-ORDER BY THE METER
I-REFER TO HYDRAULIC INFORMATION SYSTEM
M-METRIC PART

114-5142 **LINES GP-AIR CONDITIONER** *(contd.)* **i03775505**

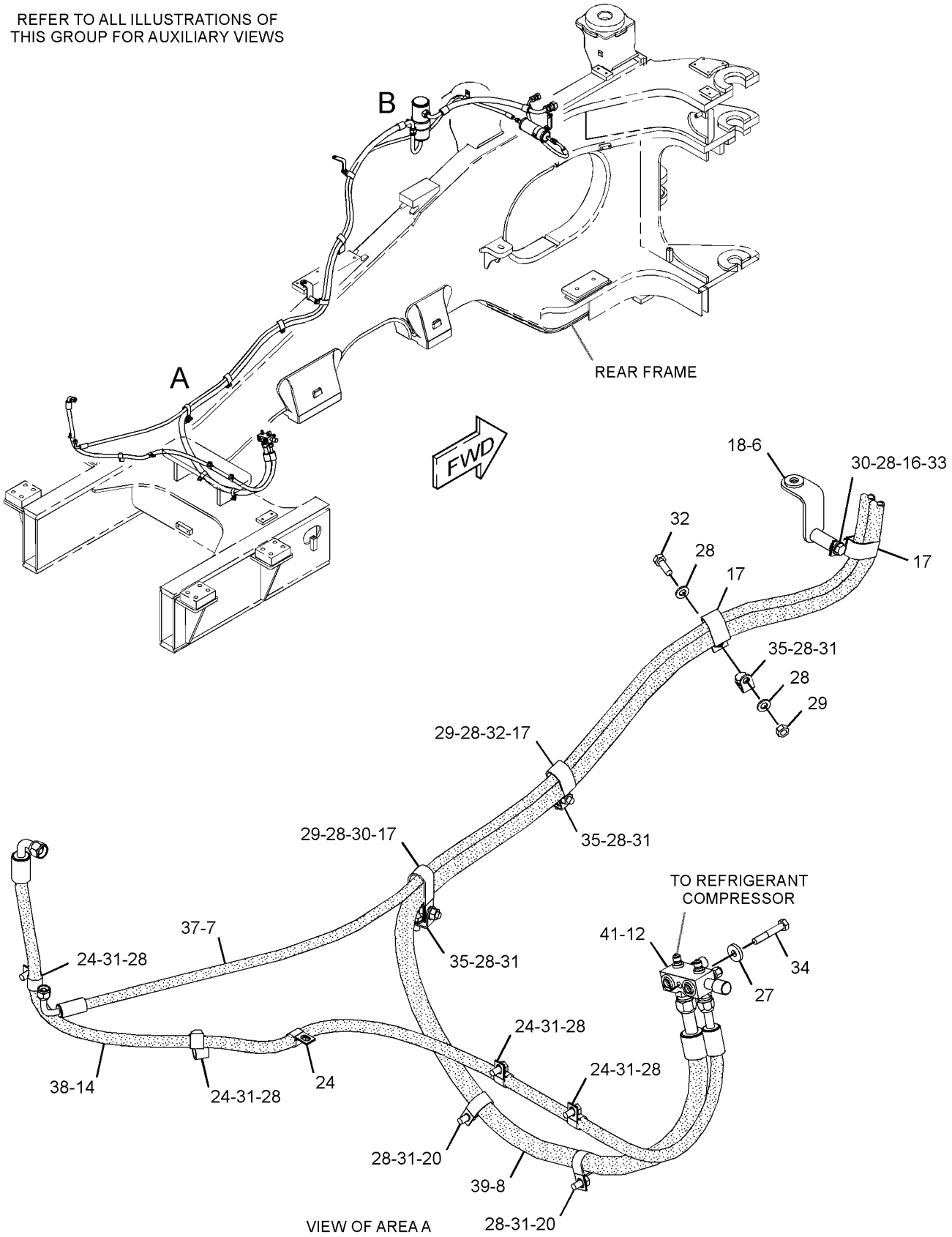

GRAPHIC #1 g02048313

114-5142 **LINES GP-AIR CONDITIONER** *(contd.)* **i03775505**

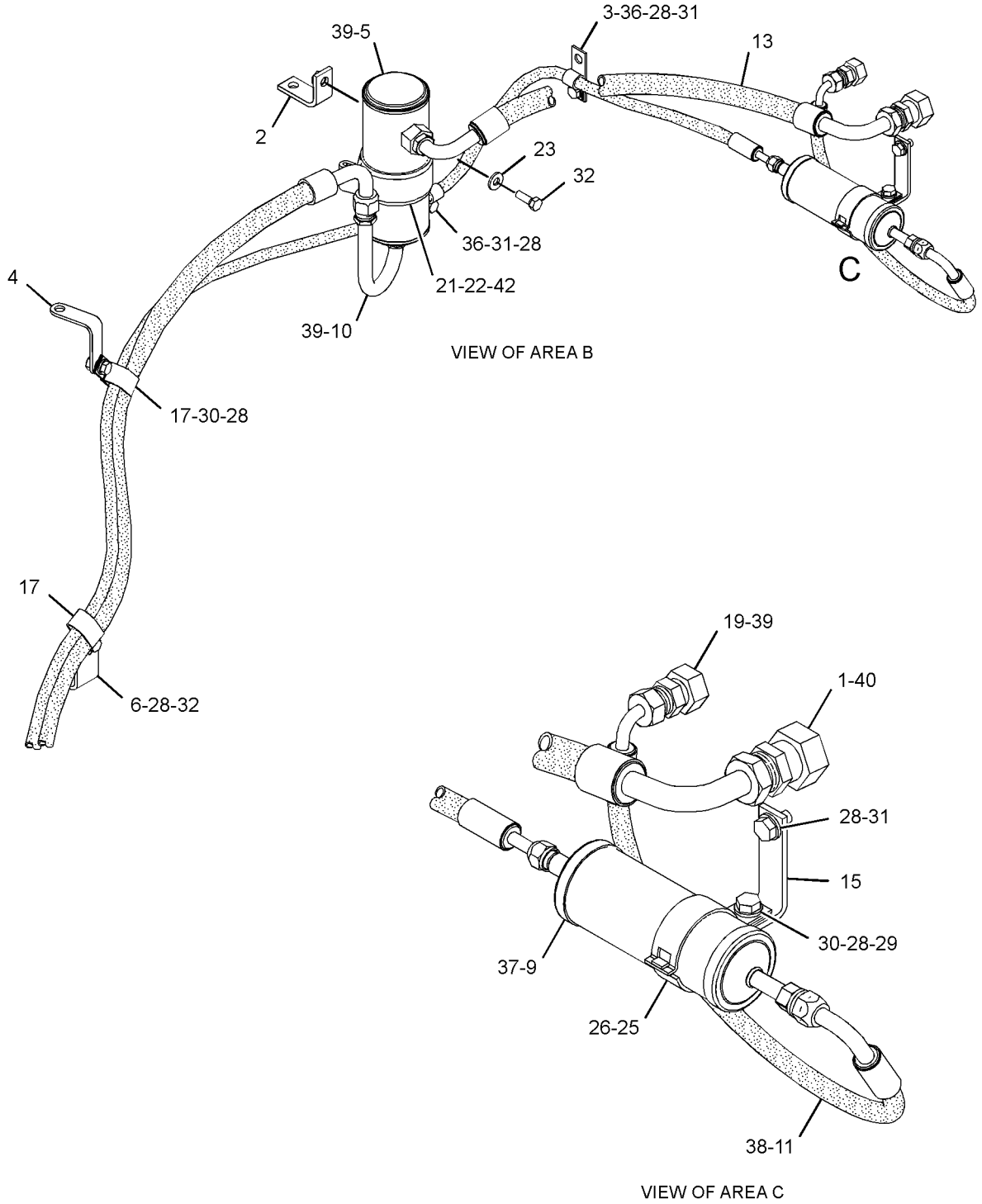

GRAPHIC #2 **<END>** g02048315

OPERATOR STATION

131-1274 LINES GP-AIR CONDITIONER

S/N: BXY1-UP
PART OF 147-3120 AIR CONDITIONER & MOUNTING GP
ALSO AN ATTACHMENT

SMCS-1808 **i01880260**

NOTE	REF NO	GRAPHIC REF	PART NUMBER	QTY	PART NAME 1 2 3 4 5 6 (PRODUCT LEVEL)	SEE PAGE
	1	1	**5P-3928**	1	COUPLING AS-REFRIGERANT (SELF SEALING)	
		1	**107-4395**	1	VALVE AS	
		1	**107-4396**	1	GASKET	
	2	1	**5P-4106**	1	NUT (1-7/16-THD)	
	3	1	**7K-3176**	1	COUPLING AS-REFRIGERANT (SELF SEALING)	
		1	**107-4393**	1	VALVE AS	
		1	**107-4394**	1	GASKET	
	4	1	**7K-3304**	1	NUT-JAM (1-20-THD)	
	5	1	**126-6008**	1	PLATE	
	6	1	**130-1887**	1	GASKET	
	7	1	**170-3447**	1	PLATE	
	8	1	**170-3448**	1	PLATE	
I	9	1	**227-1369**	1	HOSE AS	
I	10	1	**227-2441**	1	HOSE AS	
	11	1	**5P-4295**	1	CLIP	
M	12	1	**6V-4248**	1	BOLT (M10X1.5X25-MM)	
	13	1	**6V-5839**	2	WASHER (11X21X2.5-MM THK)	
M	14	1	**8T-4133**	1	NUT (M10X1.5-THD)	
	15	1	**8T-7529**	1	CLIP	
	16	1	**9X-7381**	1	SEAL-O-RING	
	17	1	**9X-7382**	1	SEAL-O-RING	
	18	1	**9X-7383**	1	SEAL-O-RING	
	19	1	**9X-7384**	1	SEAL-O-RING	

I-REFER TO HYDRAULIC INFORMATION SYSTEM
M-METRIC PART

131-1274 **LINES GP-AIR CONDITIONER** *(contd.)* **i01880260**

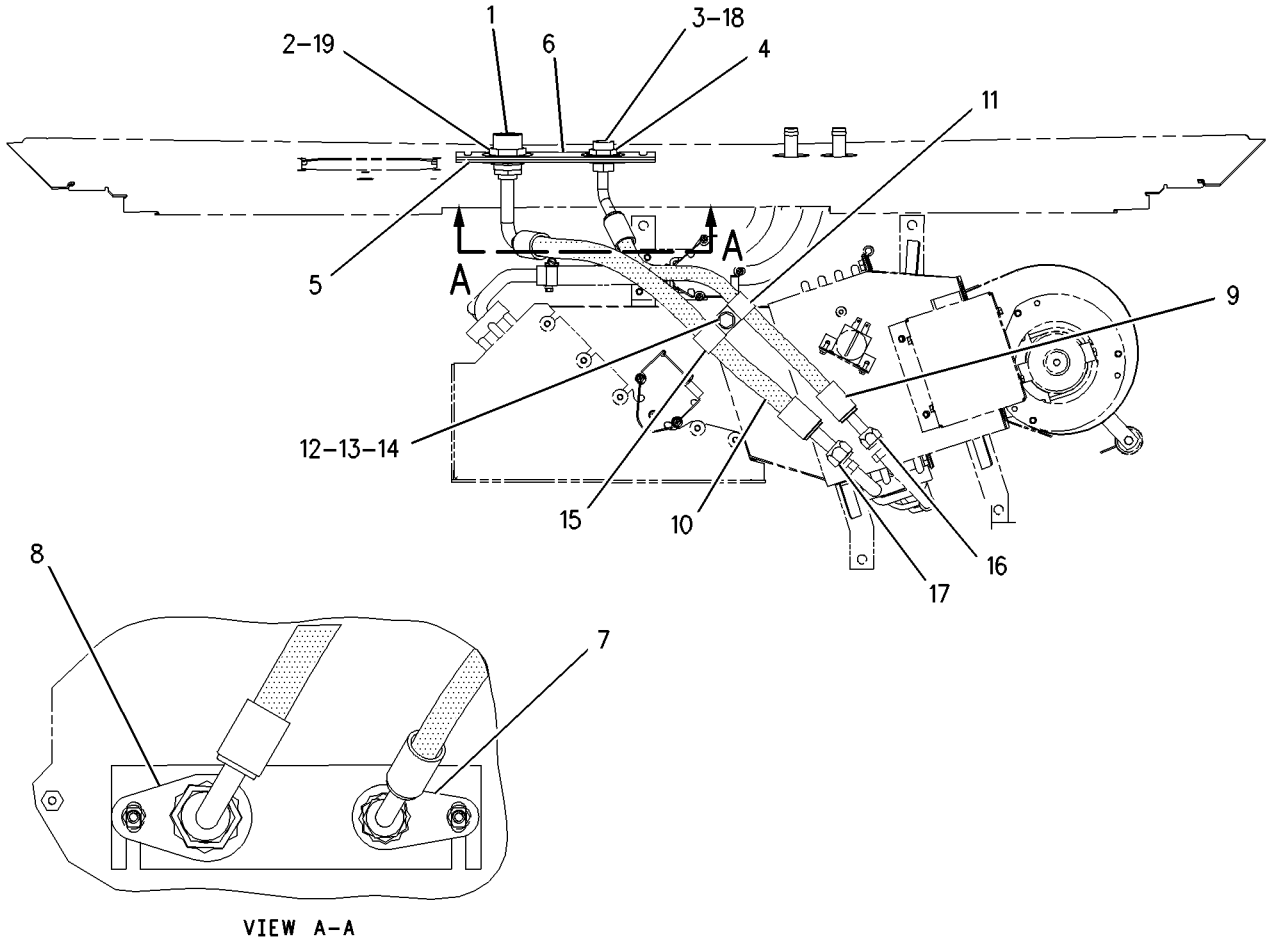

GRAPHIC #1 **<END>** g00975483

OPERATOR STATION

331-0315 LINES GP-AIR CONDITIONER

S/N: BXY2810-UP
PART OF 331-0314 AIR CONDITIONER AR
ALSO AN ATTACHMENT

SMCS-1808 **i03815469**

NOTE	REF NO	GRAPHIC REF	PART NUMBER	QTY	PART NAME 1 2 3 4 5 6 (PRODUCT LEVEL)	SEE PAGE
	1	1	**5P-3928**	1	COUPLING AS-REFRIGERANT (SELF SEALING)	
		1	**107-4395**	1	VALVE AS	
		1	**107-4396**	1	GASKET	
	2	1	**5P-4106**	1	NUT (1-7/16-16-THD)	
	3	1	**7K-3176**	1	COUPLING AS-REFRIGERANT (SELF SEALING)	
		1	**107-4393**	1	VALVE AS	
		1	**107-4394**	1	GASKET	
	4	1	**7K-3304**	1	NUT-JAM (1-20-THD)	
	5	1	**126-6008**	1	PLATE	
	6	1	**130-1887**	1	GASKET	
	7	1	**170-3447**	1	PLATE	
	8	1	**170-3448**	1	PLATE	
	9	1	**177-2215**	1	STRAP-DUAL CLAMP	
I	10	1	**227-1369**	1	HOSE AS	
I	11	1	**227-2441**	1	HOSE AS	
M	12	1	**5C-7261**	2	NUT (M8X1.25-THD)	
	13	1	**8T-4224**	2	WASHER-HARD (8.8X16X2-MM THK)	
	14	1	**9X-7381**	1	SEAL-O-RING	
	15	1	**9X-7382**	1	SEAL-O-RING	
	16	1	**9X-7383**	1	SEAL-O-RING	
	17	1	**9X-7384**	1	SEAL-O-RING	

I-REFER TO HYDRAULIC INFORMATION SYSTEM
M-METRIC PART

331-0315 **LINES GP-AIR CONDITIONER** *(contd.)* **i03815469**

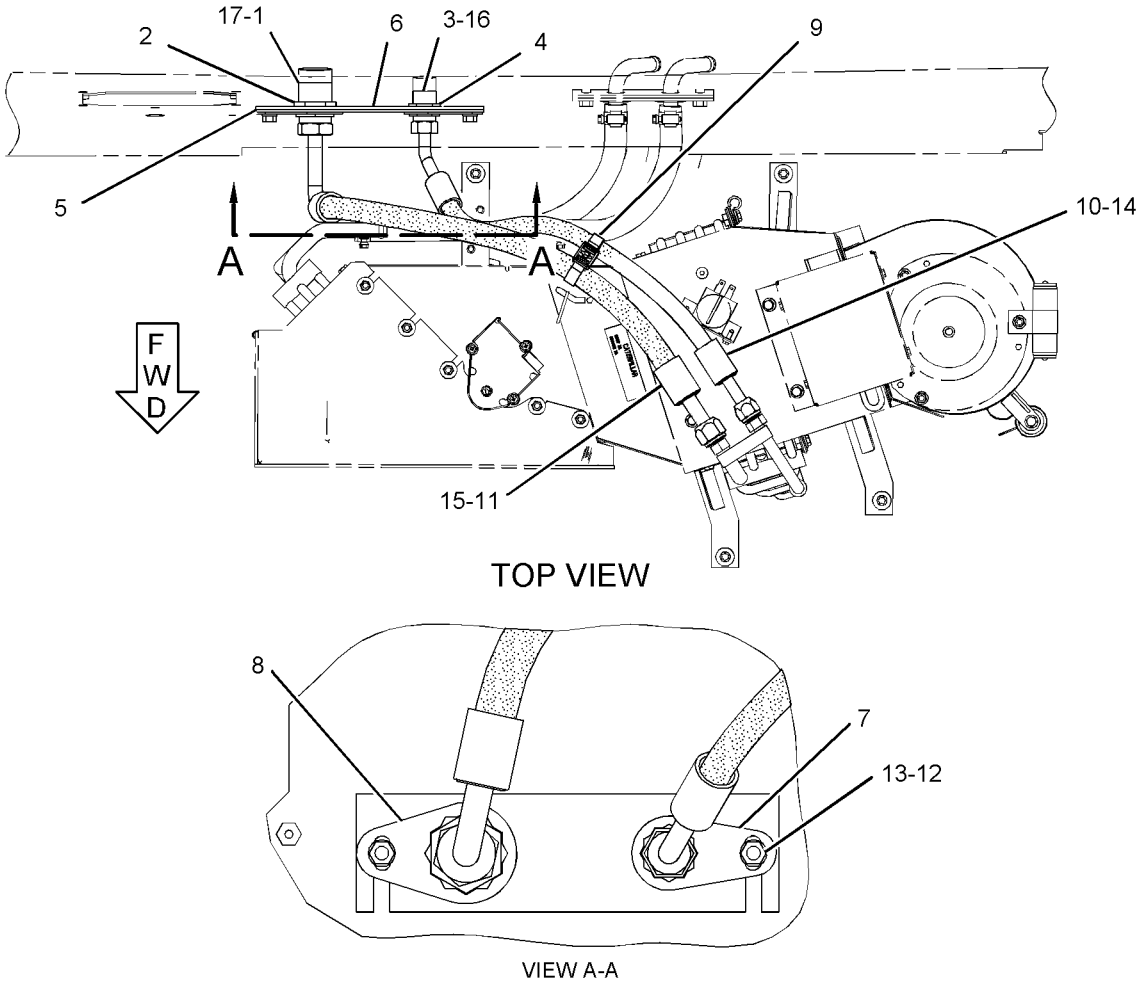

GRAPHIC #1 **<END>** g01877658

OPERATOR STATION

114-5141 LINES GP-CAB HEATER

S/N: BXY1-UP

PART OF 226-0947 FUEL AR-FAST FILL, 226-0307 LINES GP-FUEL HEATER

AN ATTACHMENT

SMCS-7304 **i03185503**

NOTE	REF NO	GRAPHIC REF	PART NUMBER	QTY	PART NAME 1 2 3 4 5 6 (PRODUCT LEVEL)	SEE PAGE
	1	1	**1V-1122**	2	TAG-IDENTIFICATION (LETTERS SPL)	
	2	1	**1V-1123**	2	TAG-IDENTIFICATION (LETTERS RET)	
	3	1	**8C-6523**	2	ADAPTER	
	4	1	**9X-2488**	4	CLAMP-HOSE	
	5	1	*165-2273*	2	VALVE GP-SHUTOFF (COOLANT)	
					(EACH INCLUDES)	
		1	**6V-7238**	1	VALVE-SHUTOFF (COOLANT DRAIN)	
		1	**3K-0360**		SEAL-O-RING	
	6	1	*148-8311*	1	ADAPTER AS	
		1	**3K-0360**	1	SEAL-O-RING	
		1	**8T-1715**	1	ADAPTER	
	7	1	**6D-1641**	6	CLIP	
E	8	1	**7I-1024**		GUARD-HOSE (215-CM)	
E	8A	1	**7I-1024**		GUARD-HOSE (182-CM)	
E	8B	1	**7I-1024**		GUARD-HOSE (190-CM)	
E	8C	1	**7I-1024**		GUARD-HOSE (132-CM)	
E	8D	1	**7I-1024**		GUARD-HOSE (232-CM)	
E	9	1	**5P-0767**		HOSE (304.8-CM)	
E	9A	1	**5P-0767**		HOSE (332.8-CM)	
	10	1	*155-7321*	1	ADAPTER AS	
		1	**3D-2824**	1	SEAL-O-RING	
		1	**6V-1722**	1	ADAPTER-O-RING	

E-ORDER BY THE CENTIMETER

114-5141 **LINES GP-CAB HEATER** *(contd.)* **i03185503**

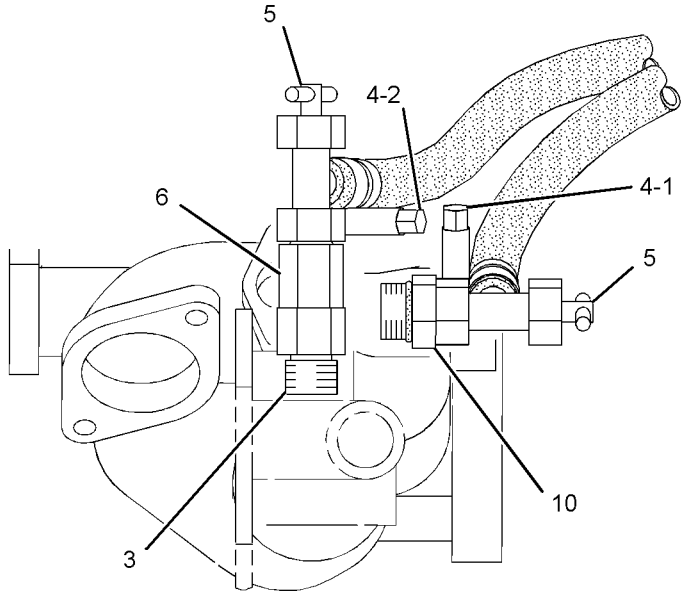

VIEW A-A

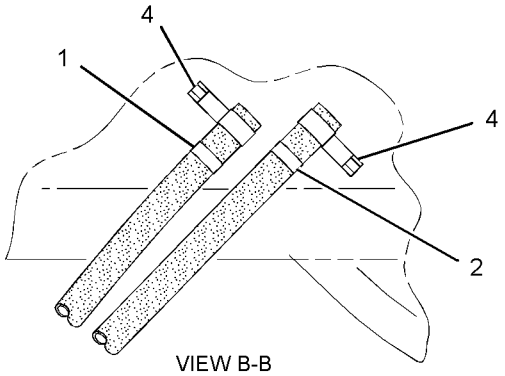

VIEW B-B

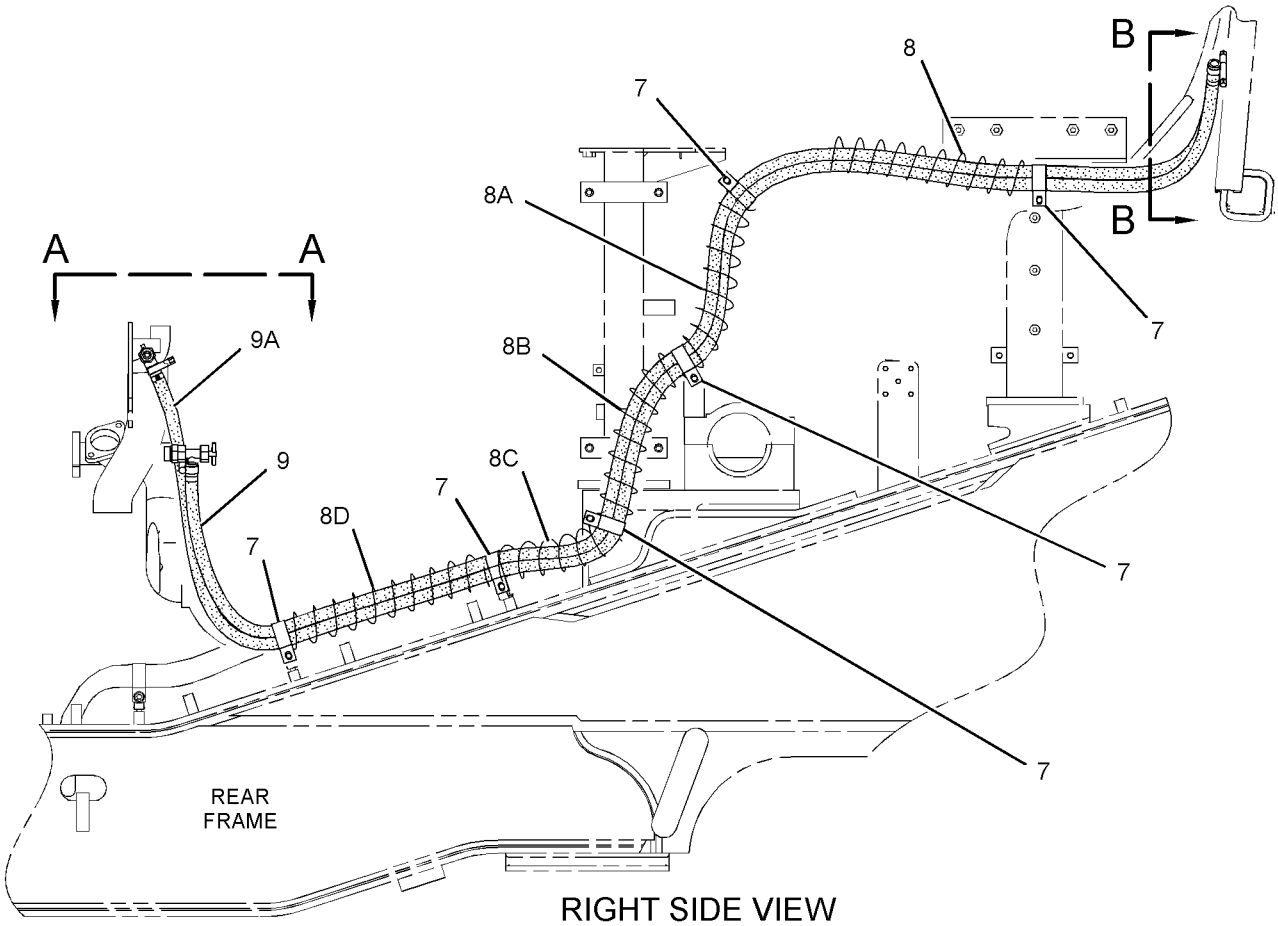

RIGHT SIDE VIEW

GRAPHIC #1 **<END>** g01703534

OPERATOR STATION

162-5812 LINES GP-CAB HEATER

S/N: BXY1-UP
PART OF 147-3120 AIR CONDITIONER & MOUNTING GP
ALSO AN ATTACHMENT

SMCS-7304 **i01310067**

NOTE	REF NO	GRAPHIC REF	PART NUMBER	QTY	PART NAME 1 2 3 4 5 6 (PRODUCT LEVEL)	SEE PAGE
	1	1	**9X-2488**	4	CLAMP-HOSE	
	2	1	**131-7741**	1	GASKET	
	3	1	**138-8187**	1	PLATE AS	
		1	**139-9469**	2	TUBE AS	
M	4	1	**5C-7261**	2	NUT (M8X1.25-THD)	
	5	1	**8T-4224**	2	WASHER-HARD (8.8X16X2-MM THK)	
E	6	1	**136-1953**		HOSE (22 CM)	
E	7	1	**136-1953**		HOSE (39 CM)	

E-ORDER BY THE CENTIMETER
M-METRIC PART

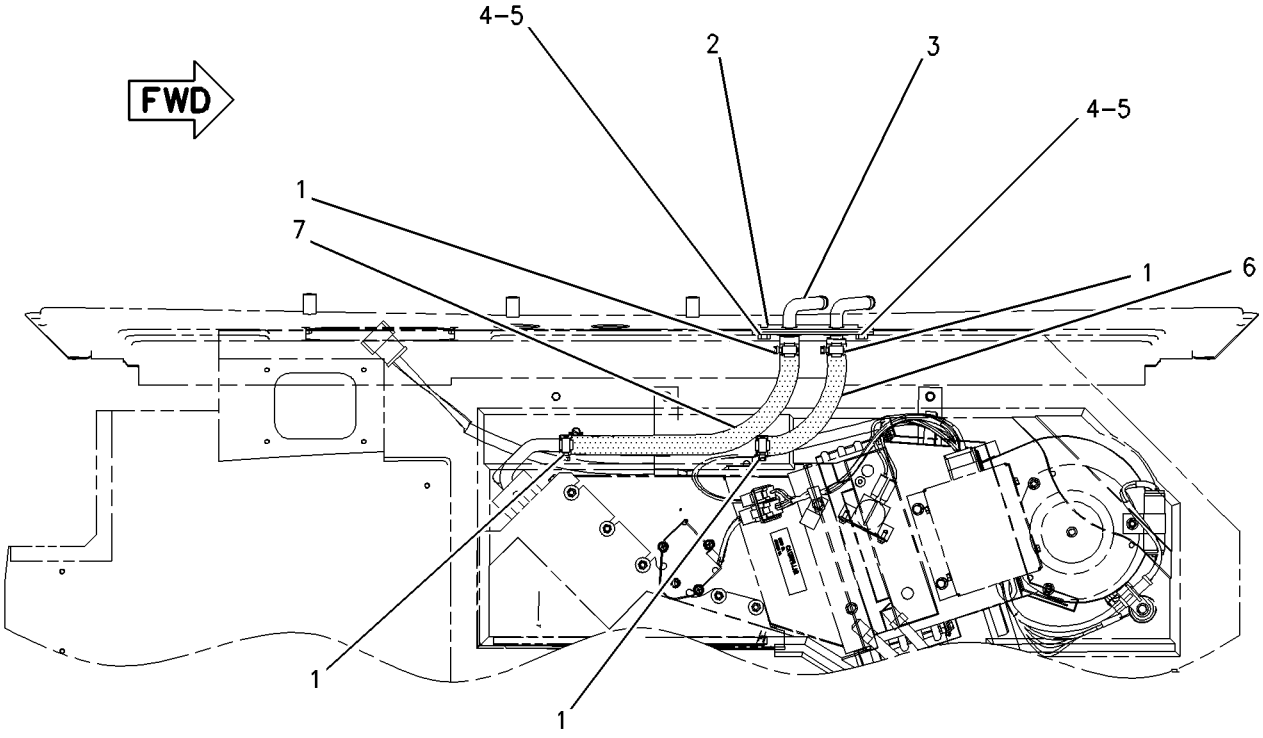

TOP VIEW

GRAPHIC #1 **<END>** g00694206

OPERATOR STATION

229-0066 LINES GP-CAB HEATER

S/N: BXY2810-UP
PART OF 331-0314 AIR CONDITIONER AR
ALSO AN ATTACHMENT

SMCS-7304 **i03174188**

NOTE	REF NO	GRAPHIC REF	PART NUMBER	QTY	PART NAME 1 2 3 4 5 6 (PRODUCT LEVEL)	SEE PAGE
	1	1	**9X-2488**	4	CLAMP-HOSE	
	2	1	**131-7741**	1	GASKET	
	3	1	**138-8187**	1	PLATE AS	
M	4	1	**5C-7261**	2	NUT (M8X1.25-THD)	
	5	1	**8T-4224**	2	WASHER-HARD (8.8X16X2-MM THK)	
E	6	1	**5P-0767**		HOSE (38-CM)	
E	6A	1	**5P-0767**		HOSE (23-CM)	

E-ORDER BY THE CENTIMETER
M-METRIC PART

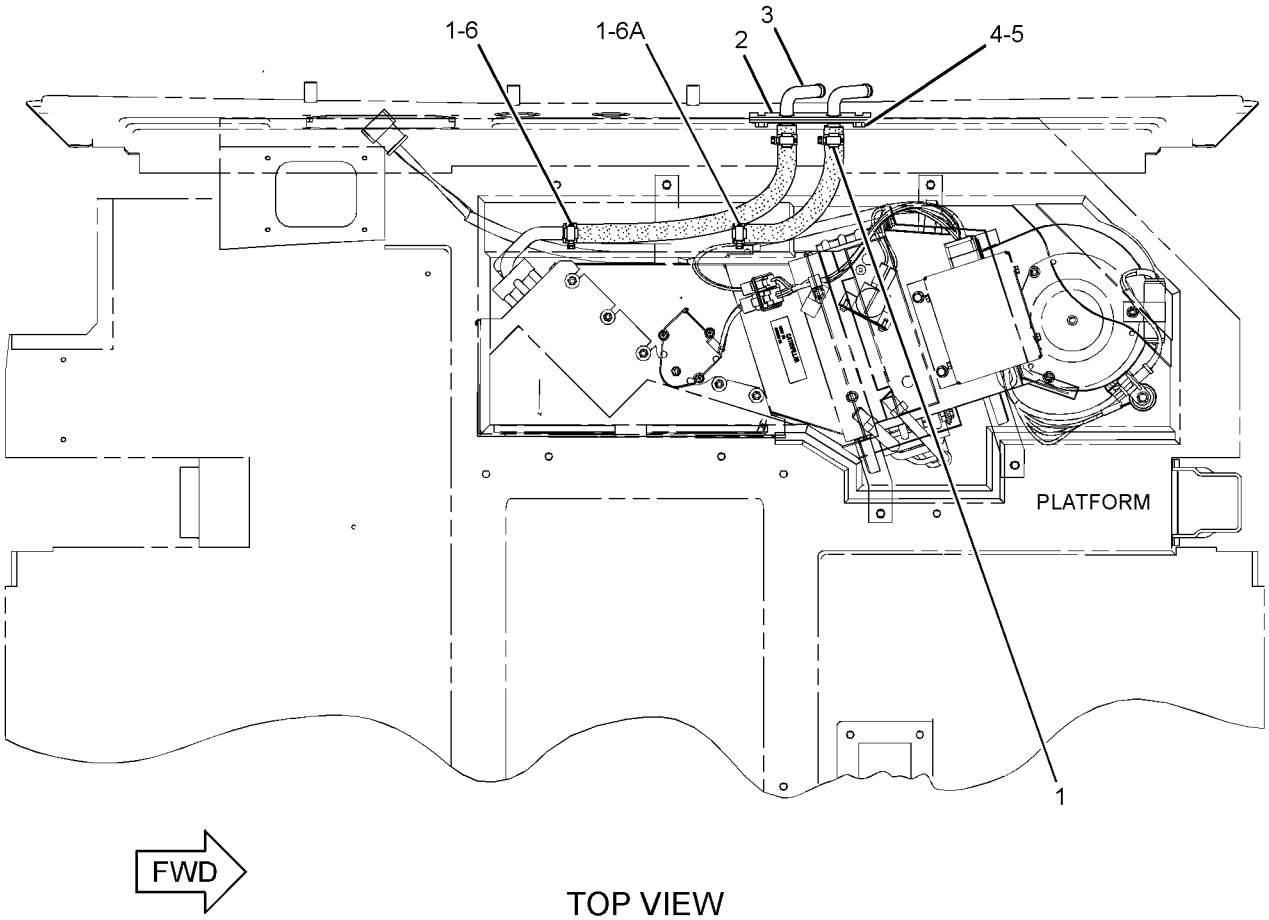

GRAPHIC #1 **<END>** g01247443

OPERATOR STATION

6V-1970 LITERATURE GP

S/N: BXY1-1899

PART OF 225-5432 CHASSIS AR

SMCS-7300, 7400 **i02831417**

NOTE	PART NUMBER	QTY	PART NAME 1 2 3 4 5 6 (PRODUCT LEVEL)	SEE PAGE
	5P-8500	2	KEY (LITERATURE COMPARTMENT)	
	5P-7958	1	SLEEVE-CABLE SPLICE	

<END>

OPERATOR STATION

115-1527 MIRROR GP-REAR VIEW

S/N: BXY1-3999

PART OF 225-5432, 284-2735 CHASSIS AR

SMCS-7319 **i03254744**

NOTE	REF NO	GRAPHIC REF	PART NUMBER	QTY	PART NAME 1 2 3 4 5 6 (PRODUCT LEVEL)	SEE PAGE
CY	1	1	*166-3416*	1	MIRROR GP-REAR VIEW (EXTERIOR, RH)	1798
CY	2	1	*166-3417*	1	MIRROR GP-REAR VIEW (EXTERIOR, LH)	1799

C-CHANGE FROM PREVIOUS TYPE
Y-SEPARATE ILLUSTRATION

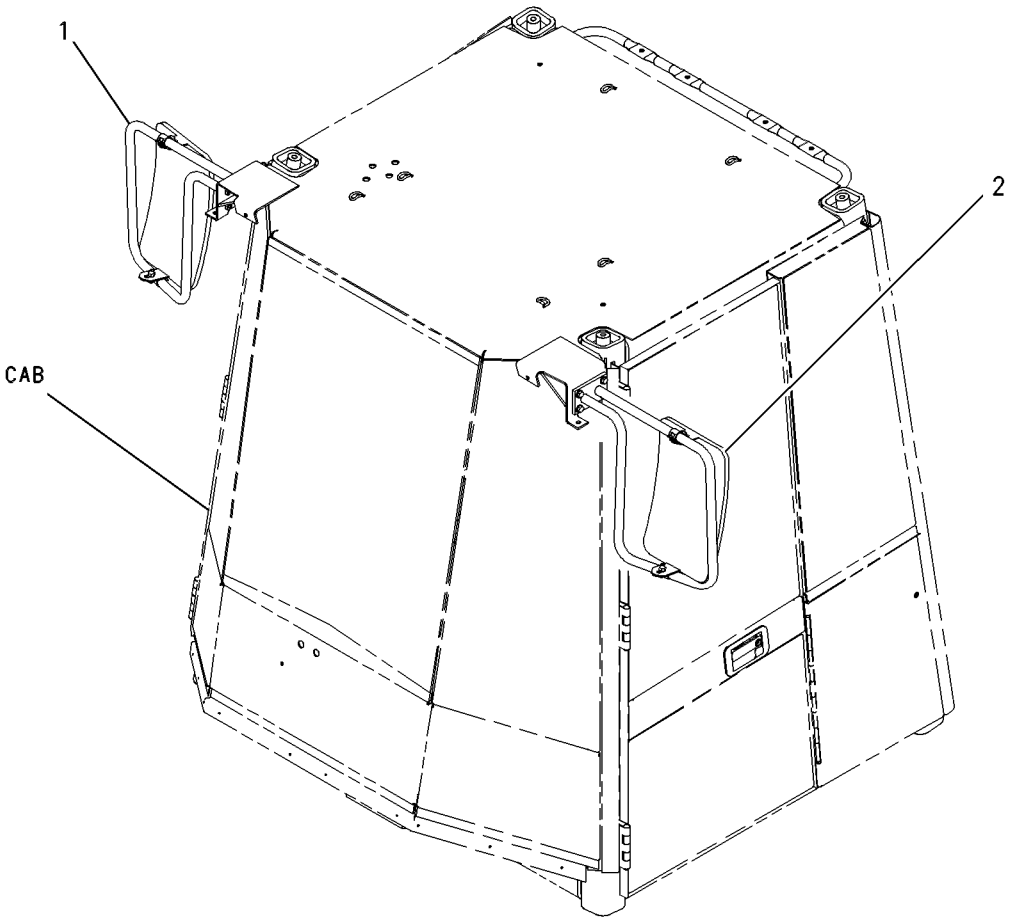

GRAPHIC #1 **<END>** g00511388

OPERATOR STATION

166-3416 MIRROR GP-REAR VIEW—EXTERIOR, RH

S/N: BXY1-UP

PART OF 115-1527 MIRROR GP-REAR VIEW

SMCS-7319 **i00998531**

NOTE	REF NO	GRAPHIC REF	PART NUMBER	QTY	PART NAME 1 2 3 4 5 6 (PRODUCT LEVEL)	SEE PAGE
	1	1	**5P-6879**	1	MIRROR	
	2	1	**8T-1889**	2	CLIP (SLOT)	
	3	1	**8T-1890**	2	CLIP (TAB)	
	4	1	**154-1981**	1	BRACKET AS	
	5	1	**8T-4121**	6	WASHER-HARD (11X21X2.5-MM THK)	
M	6	1	**8T-4133**	2	NUT (M10X1.5-THD)	
M	7	1	**8T-4195**	6	BOLT (M10X1.5X30-MM)	

M-METRIC PART

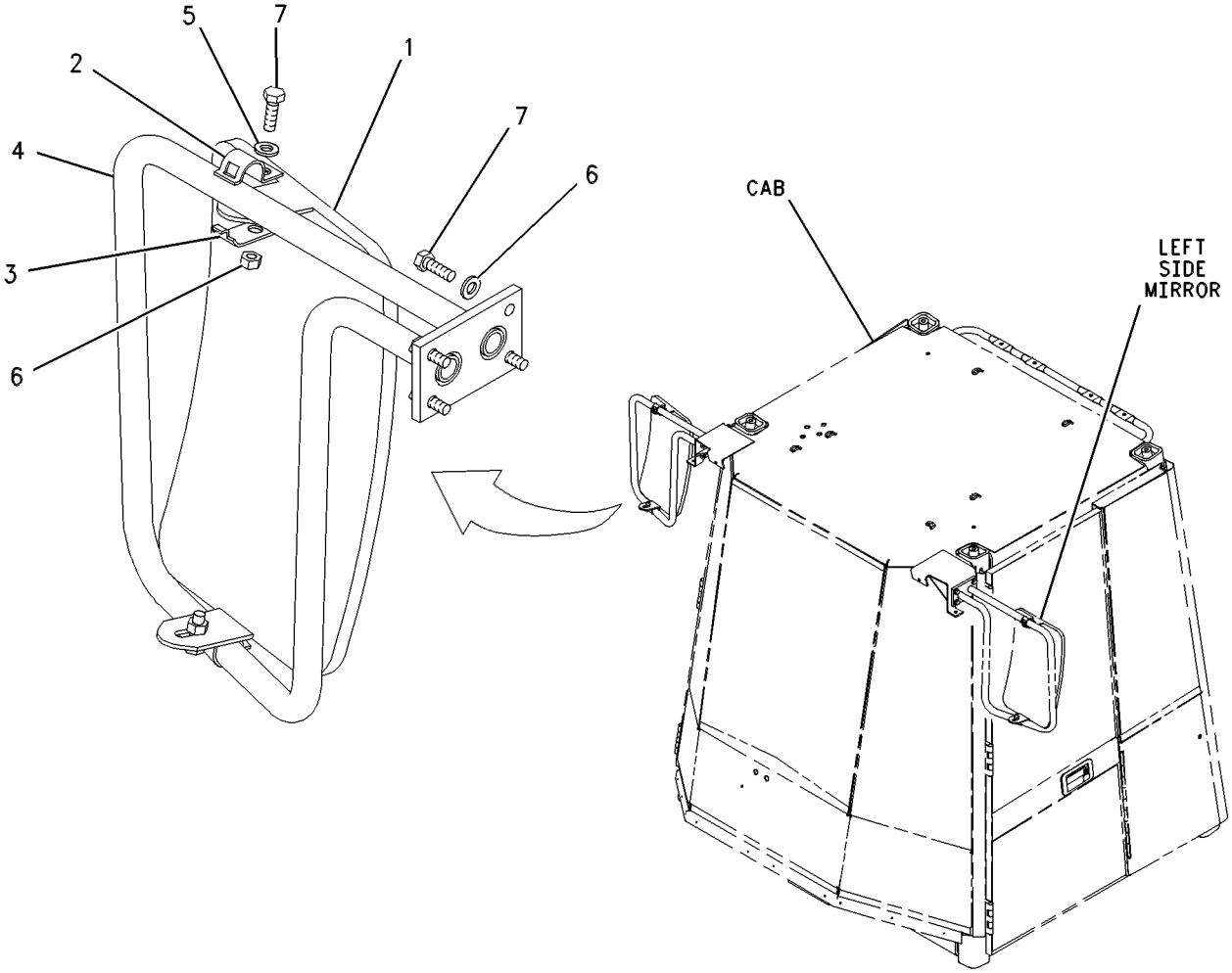

GRAPHIC #1 **<END>** g00511642

OPERATOR STATION

166-3417 MIRROR GP-REAR VIEW—EXTERIOR, LH

S/N: BXY1-UP

PART OF 115-1527 MIRROR GP-REAR VIEW

SMCS-7319 **i00998536**

NOTE	REF NO	GRAPHIC REF	PART NUMBER	QTY	PART NAME 1 2 3 4 5 6 (PRODUCT LEVEL)	SEE PAGE
	1	1	**5P-6879**	1	MIRROR	
	2	1	**8T-1889**	2	CLIP (SLOT)	
	3	1	**8T-1890**	2	CLIP (TAB)	
	4	1	**154-1982**	1	BRACKET AS	
	5	1	**8T-4121**	6	WASHER-HARD (11X21X2.5-MM THK)	
M	6	1	**8T-4133**	2	NUT (M10X1.5-THD)	
M	7	1	**8T-4195**	6	BOLT (M10X1.5X30-MM)	

M-METRIC PART

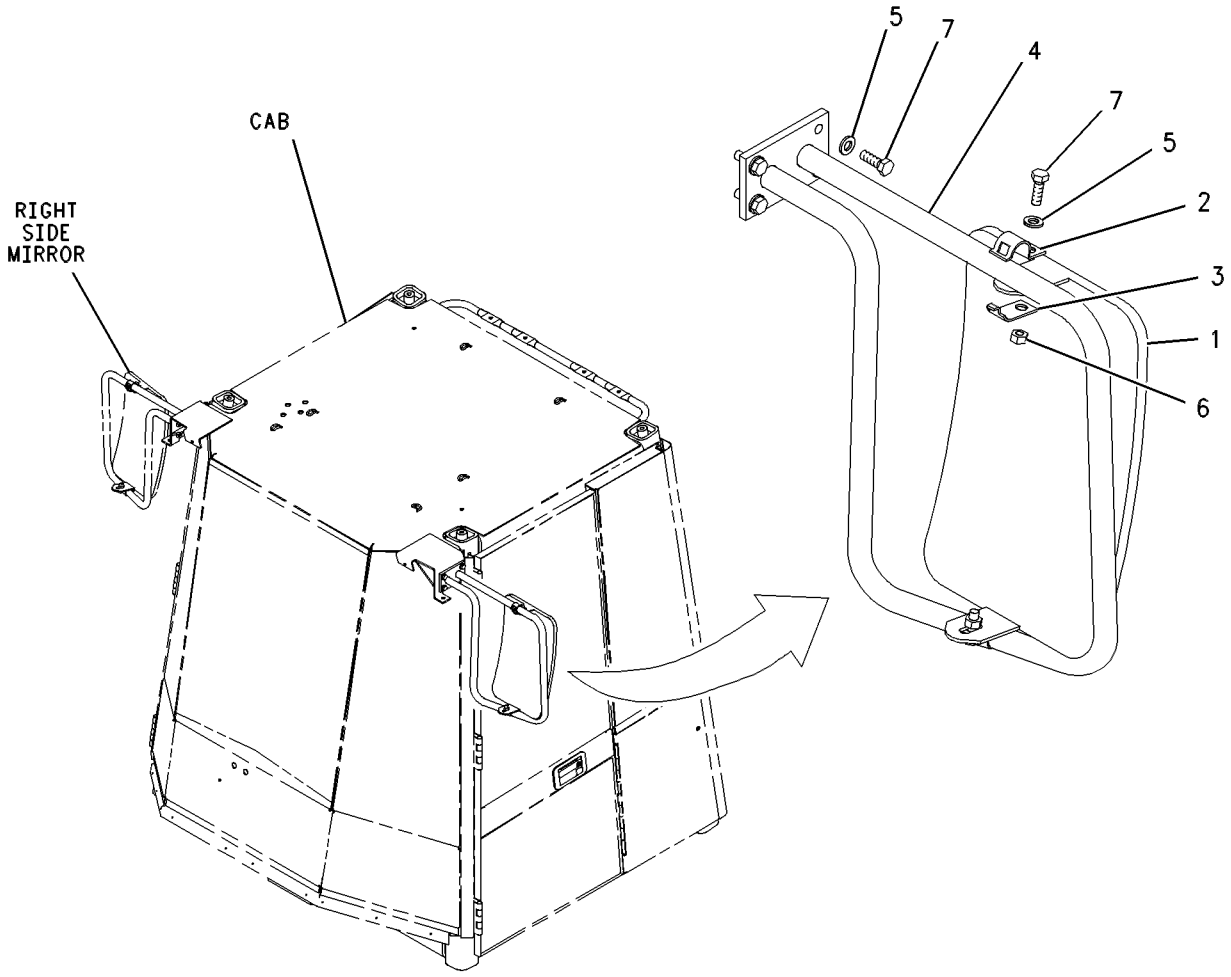

GRAPHIC #1 **<END>** g00511590

OPERATOR STATION

346-3850 MIRROR GP-REAR VIEW

S/N: BXY4000-UP

PART OF 346-3826 CAB AR

SMCS-7319 **i03765258**

NOTE	PART NUMBER	QTY	PART NAME 1 2 3 4 5 6 (PRODUCT LEVEL)	SEE PAGE
	332-6679	1	ARM AS (LH)	
	332-6900	1	ARM AS (RH)	
M	**8T-4195**	16	BOLT (M10X1.5X30-MM)	
	351-1901	2	BRACKET AS	
	185-3874	2	MIRROR AS	
	8T-4121	16	WASHER-HARD (11X21X2.5-MM THK)	

M-METRIC PART

<END>

OPERATOR STATION

166-6928 MODULE GP-QUAD GAUGE

S/N: BXY1-UP
PART OF 261-0400, 345-4460 WIRING GP-CAB
ALSO AN ATTACHMENT

SMCS-7450, 7451, 7490, 7601 **i02023668**

NOTE	REF NO	GRAPHIC REF	PART NUMBER	QTY	PART NAME 1 2 3 4 5 6 (PRODUCT LEVEL)	SEE PAGE
	1	1	**102-8805**	1	KIT-RECEPTACLE (6-PIN)	
					(INCLUDES RECEPTACLE AS & WEDGE)	
	2	1	**8T-8729**	6	PIN-CONNECTOR	

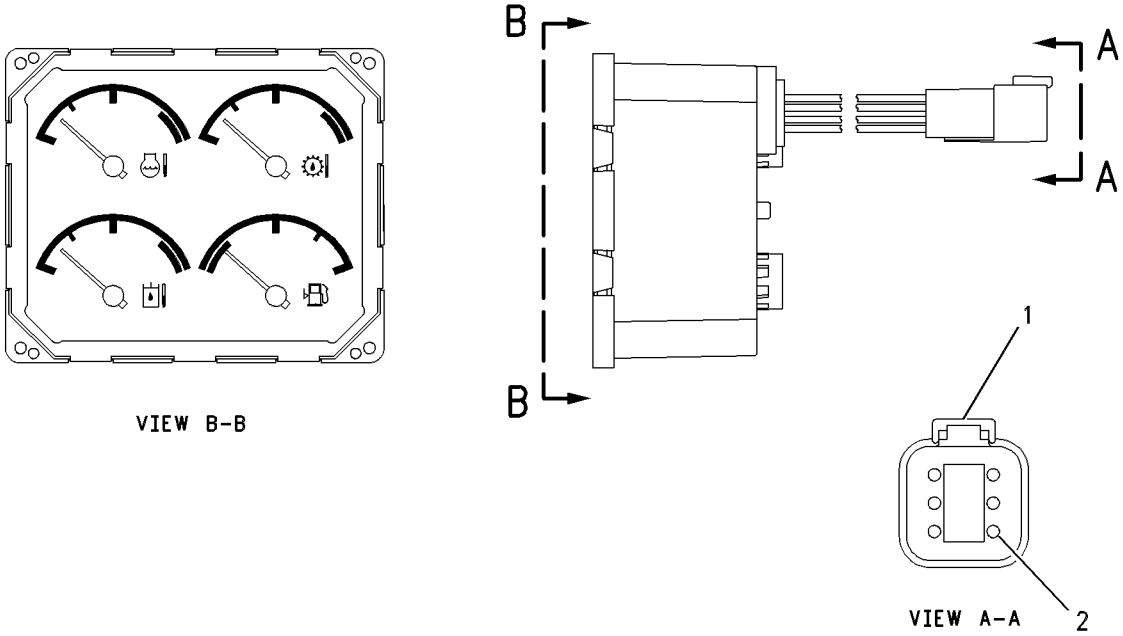

GRAPHIC #1 **<END>** g00587276

OPERATOR STATION

235-4176 MONITOR AR-PAYLOAD

S/N: BXY1-UP

AN ATTACHMENT

SMCS-7494 **i02172035**

NOTE	PART NUMBER	QTY	PART NAME 1 2 3 4 5 6 (PRODUCT LEVEL)	SEE PAGE
Y	*155-6649*	1	MONITOR GP-PAYLOAD	1803
Y	*196-5538*	1	SWITCH GP-PAYLOAD STORE (REMOTE)	458
Y	*235-2506*	1	WIRING GP-SENSOR (LIFT CYLINDER OIL PRESSURE)	657

Y-SEPARATE ILLUSTRATION

<END>

345-0533 MONITOR AR-PAYLOAD

S/N: BXY4000-UP

AN ATTACHMENT

SMCS-7494 **i03796065**

NOTE	PART NUMBER	QTY	PART NAME 1 2 3 4 5 6 (PRODUCT LEVEL)	SEE PAGE
Y	*345-0534*	1	ELECTRONICS GP-MONITOR	309
Y	*343-3146*	1	MONITOR GP-PAYLOAD	1807
Y	*350-9961*	1	SWITCH GP-PAYLOAD STORE	459
Y	*235-2506*	1	WIRING GP-SENSOR (LIFT CYLINDER OIL PRESSURE)	657

Y-SEPARATE ILLUSTRATION

<END>

OPERATOR STATION

155-6649 MONITOR GP-PAYLOAD

S/N: BXY1-1241
PART OF 235-4176 MONITOR AR-PAYLOAD
AN ATTACHMENT

SMCS-7494 **i01941015**

NOTE	REF NO	GRAPHIC REF	PART NUMBER	QTY	PART NAME 1 2 3 4 5 6 (PRODUCT LEVEL)	SEE PAGE
	1	1	**3S-2093**	2	STRAP-CABLE	
	2	1	**7N-5876**	1	LAMP (24-VOLT, 0.2-AMPERE)	
	3	1	**9X-8917**	4	SCREW-MACHINE (4-40X9.52-MM)	
M	4	1	**113-0919**	8	BOLT-SOCKET HEAD (M4X0.7X25-MM)	
	5	1	**149-3253**	1	MODULE GP-PAYLOAD KEYPAD	
		1	**102-8803**	1	KIT-RECEPTACLE (3-PIN)	
		1	**3E-3371**	1	WEDGE-RECEPTACLE LOCK (3-PIN)	
		1	**8T-8729**	3	PIN-CONNECTOR (16-GA TO 18-GA)	
CY	6	1	**228-6563**	1	CONTROL GP-MONITOR (PAYLOAD)	1722
	7	1	**151-2092**	1	HARNESS AS-MONITOR (PAYLOAD)	
		1	**8T-8737**	10	PLUG-SEAL	
		1	**7X-6222**	1	PLUG AS-CONNECTOR (24-PIN)	
		1	**3E-4367**	1	RING-RETAINING	
M		1	**3E-8558**	1	BOLT (M5X0.8X39.37-MM)	
		1	**9X-3265**	2	SEAL-CONNECTOR (24-PIN)	
		1	**102-8808**	1	KIT-CONNECTING PLUG (3-PIN)	
		1	**3E-5136**	1	RECEPTACLE AS-CONNECTOR (5-PIN)	
		1	**102-8801**	1	KIT-RECEPTACLE (12-PIN)	
	8	1	**193-2653**	1	COVER	
	9	1	**193-0771**	1	BRACKET	
	10	1	**193-2652**	1	PLATE AS	
M		1	**6V-9632**	9	NUT-WELD (M6X1-THD)	
	11	1	**8T-4121**	2	WASHER-HARD (11X21X2.5-MM THK)	
	12	1	**2G-1133**	2	GROMMET	
M	13	1	**8T-4185**	2	BOLT (M10X1.5X50-MM)	
M	14	1	**9X-2042**	4	SCREW-TRUSS HEAD (M6X1X12-MM)	
	15	1	**3E-5165**	1	CAP AS-PROTECTION	
M	16	1	**9X-2045**	5	SCREW-TRUSS HEAD (M6X1X20-MM)	

C-CHANGE FROM PREVIOUS TYPE
M-METRIC PART
Y-SEPARATE ILLUSTRATION

155-6649 **MONITOR GP-PAYLOAD** *(contd.)* **i01941015**

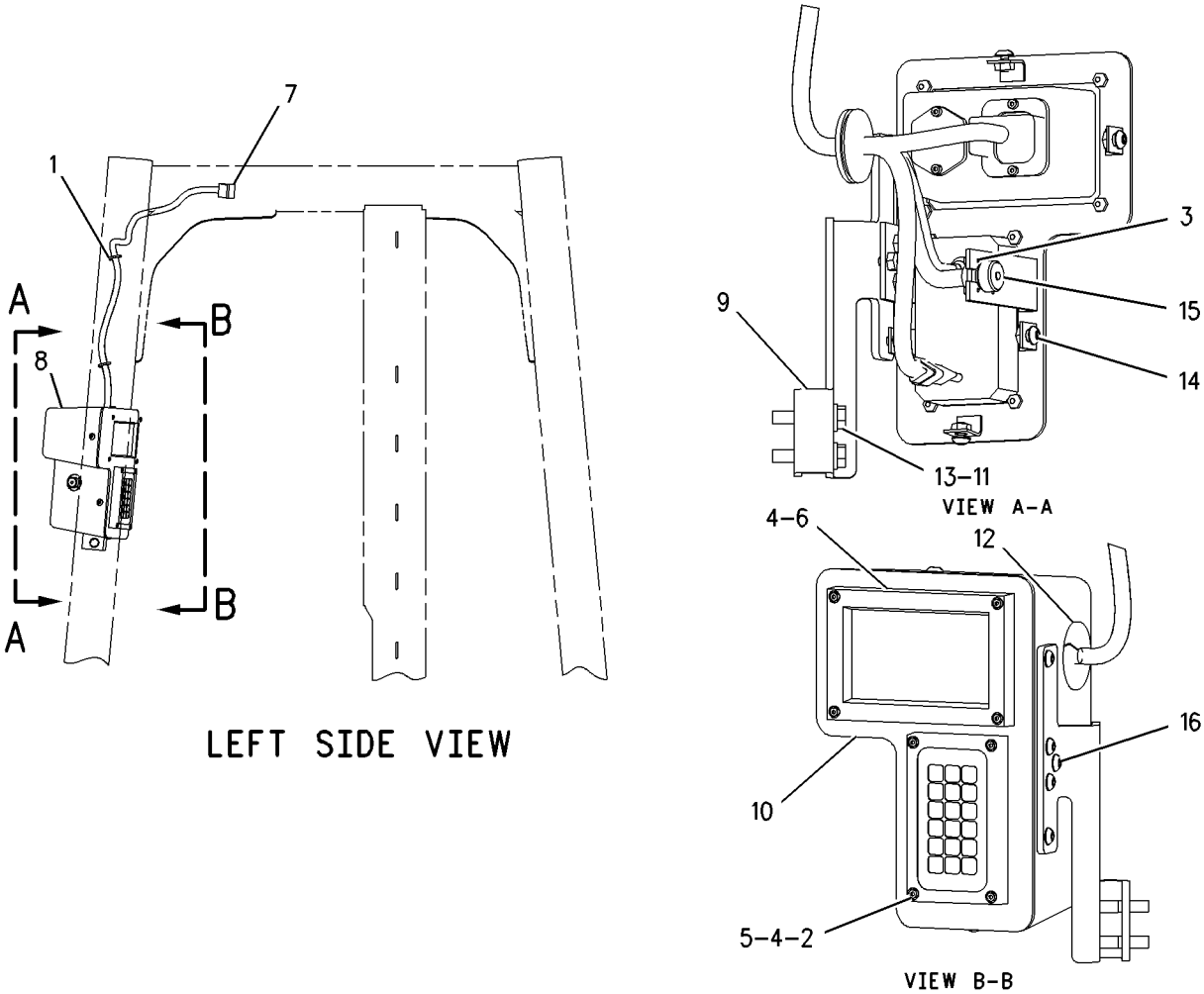

GRAPHIC #1 **<END>** g00745861

OPERATOR STATION

155-6649 MONITOR GP-PAYLOAD

S/N: BXY1242-UP
PART OF 235-4176 MONITOR AR-PAYLOAD
AN ATTACHMENT

SMCS-7494 **i02650401**

NOTE	REF NO	GRAPHIC REF	PART NUMBER	QTY	PART NAME 1 2 3 4 5 6 (PRODUCT LEVEL)	SEE PAGE
	1	1	**3S-2093**	2	STRAP-CABLE	
	2	1	**7N-5876**	1	LAMP (24-VOLT, 0.2-AMPERE)	
	3	1	**9X-8917**	4	SCREW-MACHINE (4-40X9.52-MM)	
M	4	1	**113-0919**	8	BOLT-SOCKET HEAD (M4X0.7X25-MM)	
	5	1	**297-1398**	1	MODULE GP-PAYLOAD KEYPAD	
		1	**301-0412**	1	FILM-KEYPAD	
		1	**102-8803**	1	KIT-RECEPTACLE (3-PIN)	
					(KIT INCLUDES RECEPTACLE AS AND WEDGE)	
		1	**3E-3371**	1	WEDGE-RECEPTACLE LOCK (3-PIN)	
		1	**186-3735**	3	PIN-CONNECTOR (16-GA TO 18-GA)	
CY	6	1	**283-1604**	1	CONTROL GP-MONITOR (PAYLOAD)	1723
	7	1	**151-2092**	1	HARNESS AS-MONITOR (PAYLOAD)	
		1	**3T-3159**	1	SPRING	
		1	**155-2260**	1	KIT-CONNECTING PLUG (3-PIN)	
					(INCLUDES PLUG AS AND WEDGE)	
		1	**7X-6222**	1	PLUG AS-CONNECTOR (24-PIN)	
		1	**3E-4367**	1	RING-RETAINING	
M		1	**3E-8558**	1	BOLT (M5X0.8X39.37-MM)	
		1	**9X-3265**	2	SEAL-CONNECTOR (24-PIN)	
		1	**3E-5136**	1	RECEPTACLE AS-CONNECTOR (5-PIN)	
		1	**102-8801**	1	KIT-RECEPTACLE (12-PIN)	
					(KIT INCLUDES RECETPACLE AS AND WEDGE)	
	8	1	**193-2653**	1	COVER	
	9	1	**193-0771**	1	BRACKET	
	10	1	**193-2652**	1	PLATE AS	
	11	1	**8T-4121**	2	WASHER-HARD (11X21X2.5-MM THK)	
	12	1	**2G-1133**	1	GROMMET	
M	13	1	**8T-4185**	2	BOLT (M10X1.5X50-MM)	
M	14	1	**9X-2042**	4	SCREW-TRUSS HEAD (M6X1X12-MM)	
	15	1	**3E-5165**	1	CAP AS-PROTECTION	
M	16	1	**9X-2045**	5	SCREW-TRUSS HEAD (M6X1X20-MM)	

C-CHANGE FROM PREVIOUS TYPE
M-METRIC PART
Y-SEPARATE ILLUSTRATION

155-6649 **MONITOR GP-PAYLOAD** *(contd.)* **i02650401**

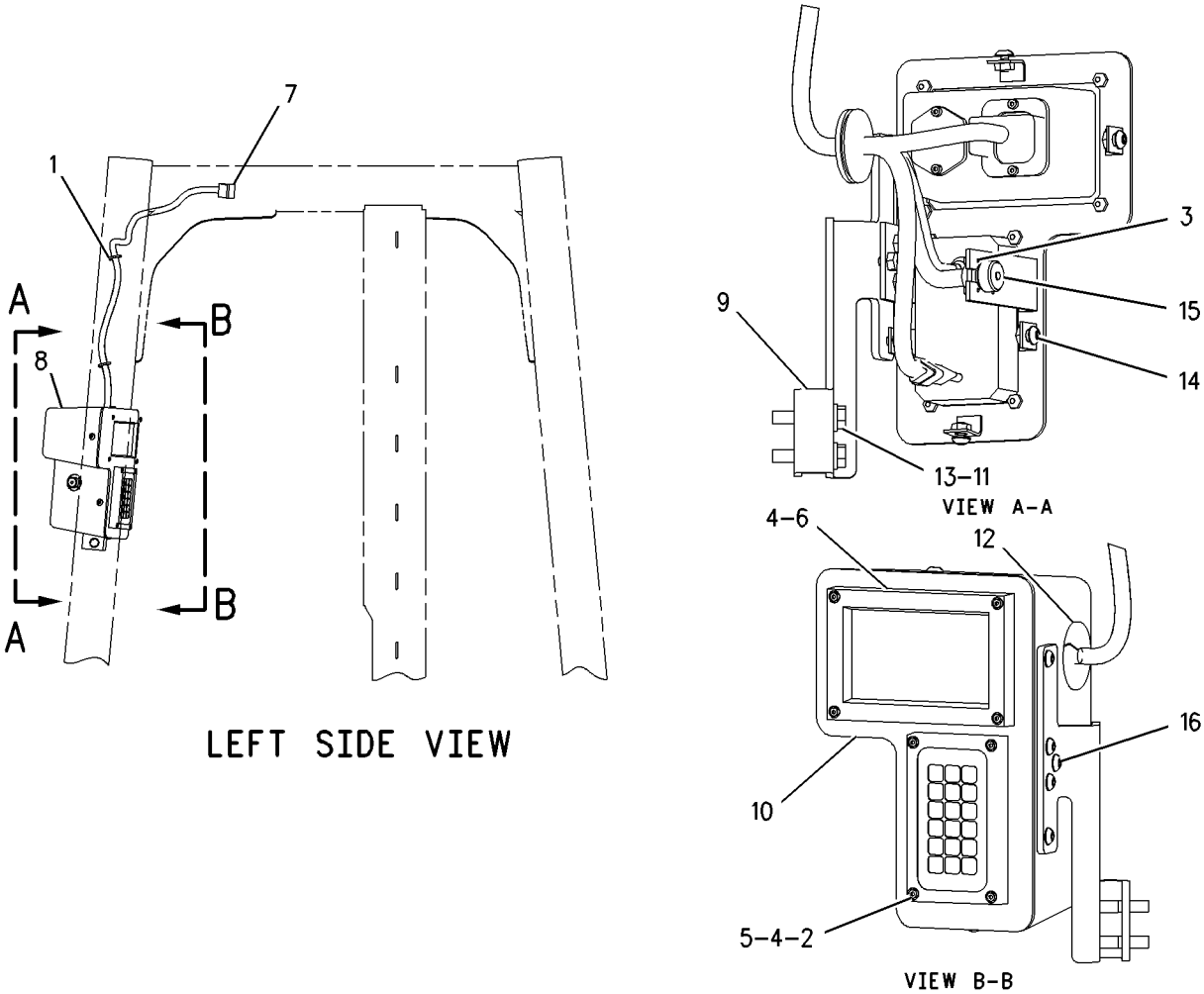

GRAPHIC #1 **<END>** g00745861

OPERATOR STATION

343-3146 MONITOR GP-PAYLOAD

S/N: BXY4000-UP
PART OF 345-0533 MONITOR AR-PAYLOAD
AN ATTACHMENT

SMCS-7494 **i03796069**

NOTE	REF NO	GRAPHIC REF	PART NUMBER	QTY	PART NAME 1 2 3 4 5 6 (PRODUCT LEVEL)	SEE PAGE
	1	1	**6I-1418**	2	SPACER (8.2X12.7X28.7-MM THK)	
	2	1	**7K-1181**	9	STRAP-CABLE	
	3	1	**261-3222**	1	MOUNTING GP-DISPLAY (WORK AREA VISUAL SYSTEM)	
		1	**259-4397**	1	CLAMP GP	
		1	**259-4399**	2	BASE	
	4	1	**268-1708**	1	SWITCH AS-ROCKER (PAYLOAD ZERO, REWEIGH)	
	5	1	**301-0038**	1	BOX AS	
R	6	1	**304-5691**	1	CONTROL GP-UNPROGRAMMED	
Y	7	1	**308-3869**	1	CONTROL GP-UNPRGMED MONITOR (MESSENGER)	1732
	8	1	**343-3147**	1	BRACKET AS	
	9	1	**347-7102**	1	HARNESS AS-CONTROL	
		1	**126-1774**	2	COVER-CONNECTOR	
		1	**155-2265**	1	KIT-CONNECTING PLUG (8-PIN)	
		1	**155-2274**	1	KIT-CONNECTING PLUG (6-PIN)	
		1	**174-0503**	1	KIT-CONNECTING PLUG (3-PIN)	
		1	**245-7434**	1	KIT-CONNECTING PLUG (10-PIN)	
					(EACH PLUG KIT INCLUDES PLUG AS, WEDGE, & INTERFACE SEAL)	
		1	**102-8801**	1	KIT-RECEPTACLE (12-PIN)	
		1	**102-8805**	1	KIT-RECEPTACLE (6-PIN)	
					(EACH RECEPTACLE KIT INCLUDES RECEPTACLE AS & WEDGE)	
		1	**9X-3401**	8	PIN-CONNECTOR (16-GA TO 18-GA)	
		1	**126-1767**	1	PIN-CONNECTOR (14-GA)	
		1	**8T-8737**	140	PLUG-SEAL	
		1	**147-1445**	1	PLUG AS-CONNECTOR (70-PIN)	
		1	**159-9322**		SEAL-O-RING	
		1	**147-1446**	1	PLUG AS-CONNECTOR (70-PIN)	
		1	**159-9322**	1	SEAL-O-RING	
		1	**185-1861**	7	SEAL-WIRE	
		1	**9X-3402**	26	SOCKET-CONNECTOR (16-GA TO 18-GA)	
		1	**3S-2093**	4	STRAP-CABLE	
E		1	**119-3662**		TUBE-HEAT SHRINK (10.85-MM DIA) (7-CM)	
E		1	**125-7874**		TUBE-HEAT SHRINK (5.72-MM DIA) (25-CM)	
E		1	**125-7875**		TUBE-HEAT SHRINK (7.44-MM DIA) (10-CM)	
	10	1	**134-2540**	1	RESISTOR AS-CONNECTION (3-PIN)	
	11	1	**326-3092**	1	VISOR (MESSENGER)	
M	12	1	**7X-0818**	2	BOLT (M8X1.25X45-MM)	
M	13	1	**8T-4138**	4	BOLT (M6X1X20-MM)	
	14	1	**8T-9655**	8	MOUNT-ISOLATION	
	15	1	**9N-0869**	2	WASHER-HARD (8.8X25.5X2-MM THK)	
M	16	1	**9X-2040**	2	SCREW-TRUSS HEAD (M10X1.5X25-MM)	
	17	1	**9X-8256**	4	WASHER (6.6X12X2-MM THK)	

E-ORDER BY THE CENTIMETER
M-METRIC PART
R-REMFG PART MAY BE AVAILABLE
Y-SEPARATE ILLUSTRATION

343-3146 **MONITOR GP-PAYLOAD** *(contd.)* **i03796069**

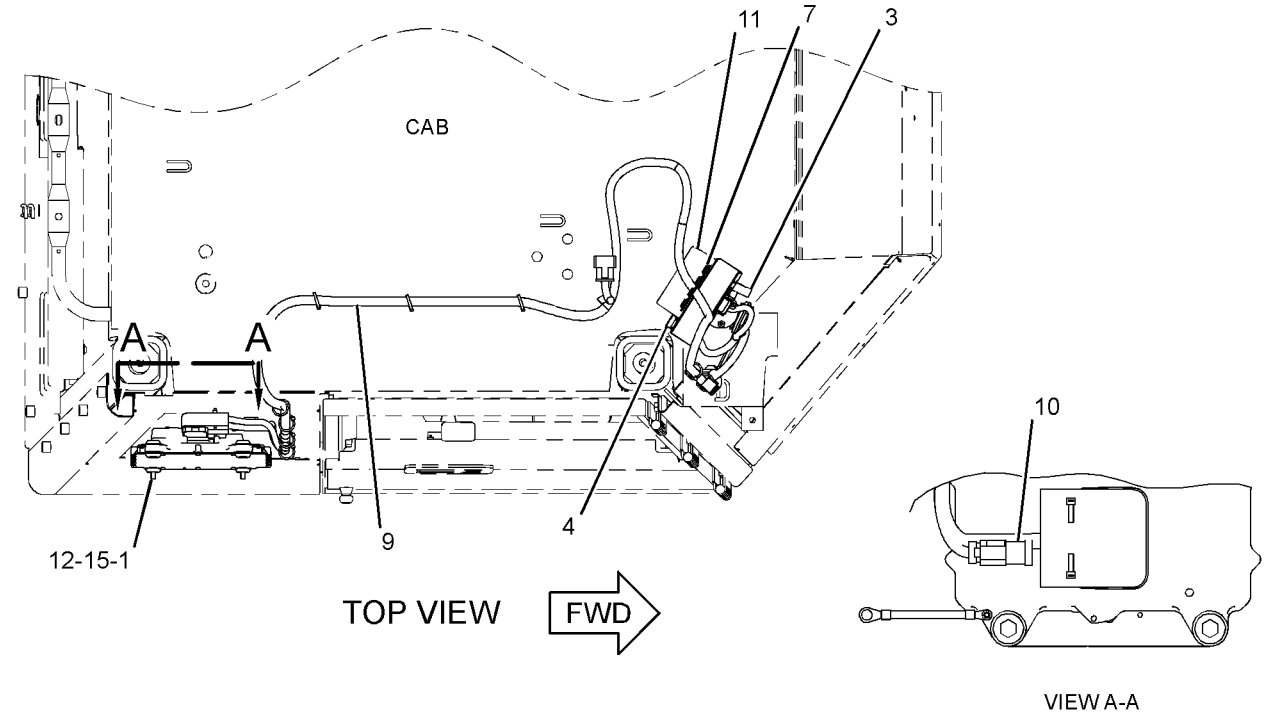

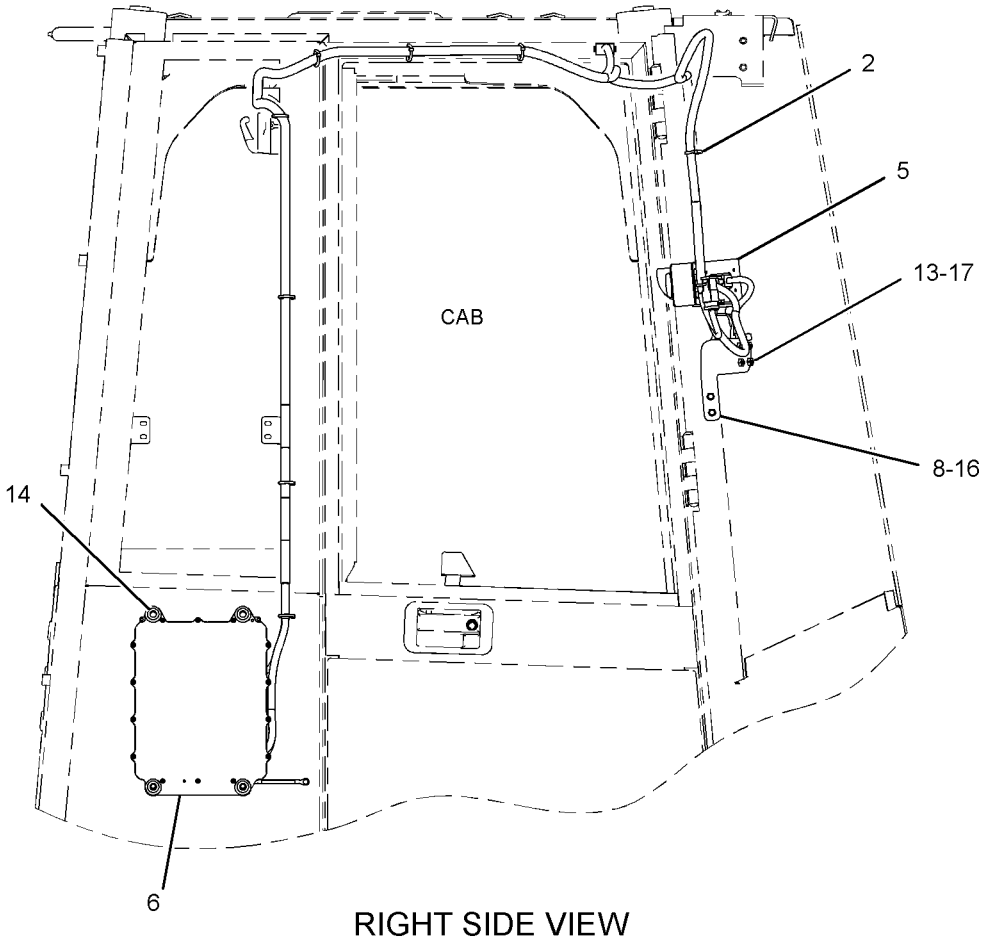

GRAPHIC #1 **<END>** g02059713

OPERATOR STATION

155-5789 MOTOR GP-WINDOW WIPER—REAR

S/N: BXY1-2908

PART OF 109-8196 WIPER GP-WINDOW

SMCS-7305 **i02463764**

NOTE	REF NO	GRAPHIC REF	PART NUMBER	QTY	PART NAME 1 2 3 4 5 6 (PRODUCT LEVEL)	SEE PAGE
	1	1	**102-8805**	1	KIT-RECEPTACLE (6-PIN)	
					(INCLUDES RECEPTACLE AS AND WEDGE)	
	2	1	**8T-8737**	1	PLUG-SEAL	
	3	1	**186-3735**	5	PIN-CONNECTOR (16-GA TO 18-GA)	

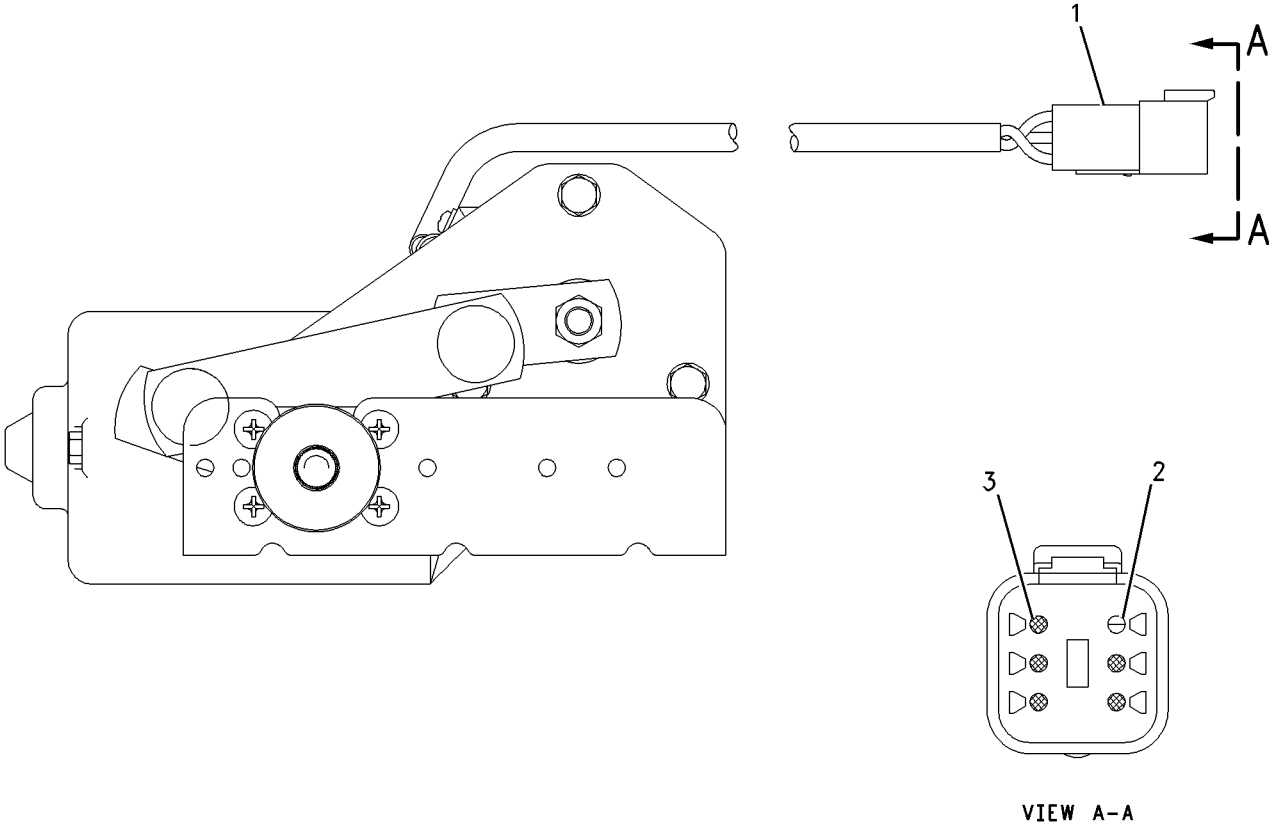

GRAPHIC #1 **<END>** g00665801

OPERATOR STATION

155-5790 MOTOR GP-WINDOW WIPER—FRONT

S/N: BXY1-UP

PART OF 109-8196 WIPER GP-WINDOW

SMCS-7305 **i01319138**

NOTE	REF NO	GRAPHIC REF	PART NUMBER	QTY	PART NAME 1 2 3 4 5 6 (PRODUCT LEVEL)	SEE PAGE
	1	1	**102-8805**	1	KIT-RECEPTACLE (6-PIN)	
					(INCLUDES RECEPTACLE AS AND WEDGE)	
	2	1	**8T-8737**	1	PLUG-SEAL	
	3	1	**8T-8729**	5	PIN-CONNECTOR	

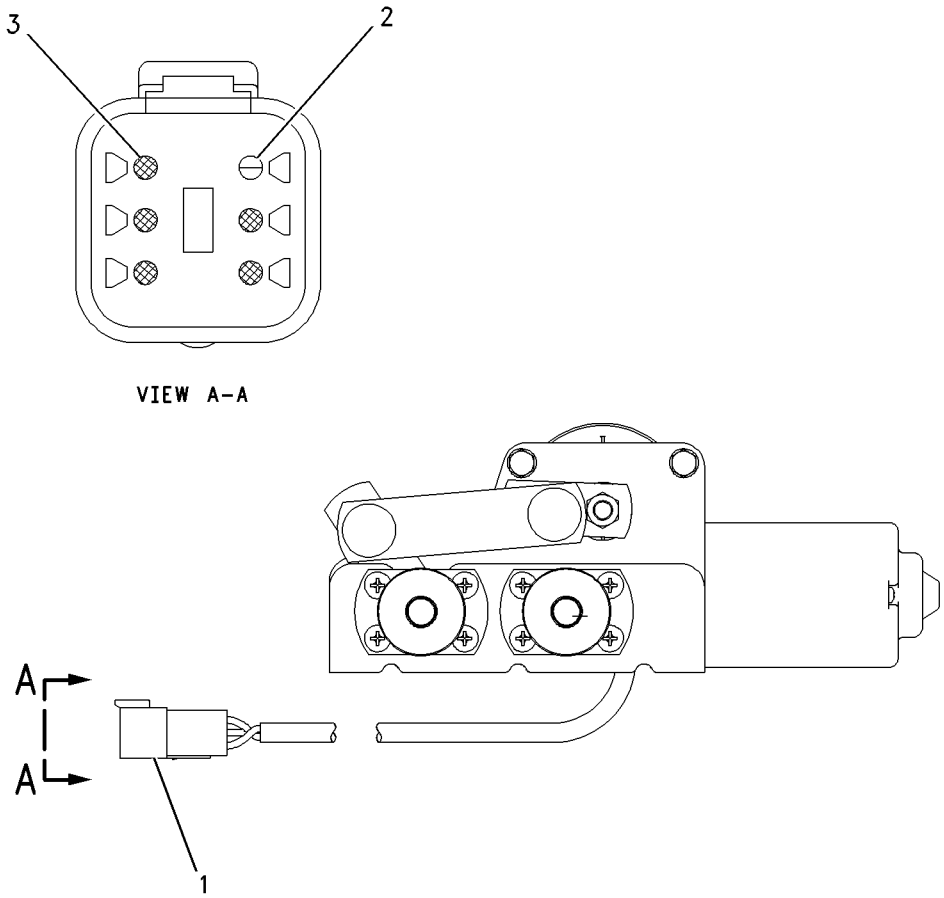

GRAPHIC #1 **<END>** g00668134

OPERATOR STATION

184-5093 MOTOR GP-WINDOW WIPER—REAR

S/N: BXY1900-UP
PART OF 183-3756 WIPER GP-WINDOW
AN ATTACHMENT

SMCS-7305 **i01892838**

NOTE	REF NO	GRAPHIC REF	PART NUMBER	QTY	PART NAME 1 2 3 4 5 6 (PRODUCT LEVEL)	SEE PAGE
	1	1	**102-8805**	1	KIT-RECEPTACLE (6-PIN)	
					(INCLUDES RECEPTACLE AS AND WEDGE)	
	2	1	**8T-8737**	1	PLUG-SEAL	
	3	1	**186-3735**	5	PIN-CONNECTOR (16-GA TO 18-GA)	

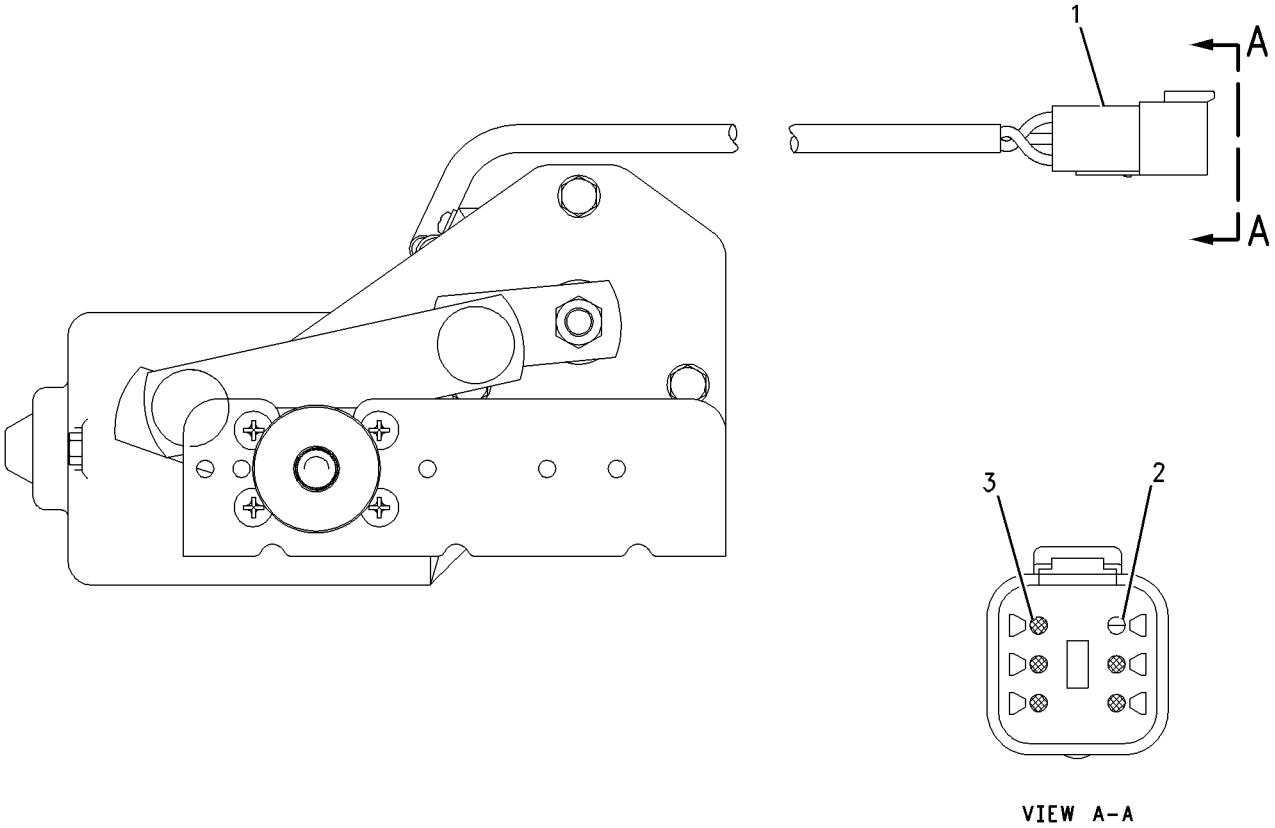

GRAPHIC #1 **<END>** g00665801

OPERATOR STATION

330-5050 MOTOR GP-WINDOW WIPER

S/N: BXY2909-UP

PART OF 109-8196 WIPER GP-WINDOW

SMCS-7305 **i03644422**

NOTE	REF NO	GRAPHIC REF	PART NUMBER	QTY	PART NAME 1 2 3 4 5 6 (PRODUCT LEVEL)	SEE PAGE
	1	1	**206-5823**	1	CAP	
	2	1	**328-2264**	1	MOTOR GP-WINDOW WIPER	
		1	**8T-8737**	1	PLUG-SEAL	
		1	**102-8805**	1	KIT-RECEPTACLE (6-PIN)	
					(INCLUDES RECEPTACLE AS & WEDGE)	
		1	**186-3735**	5	PIN-CONNECTOR (16-GA TO 18-GA)	

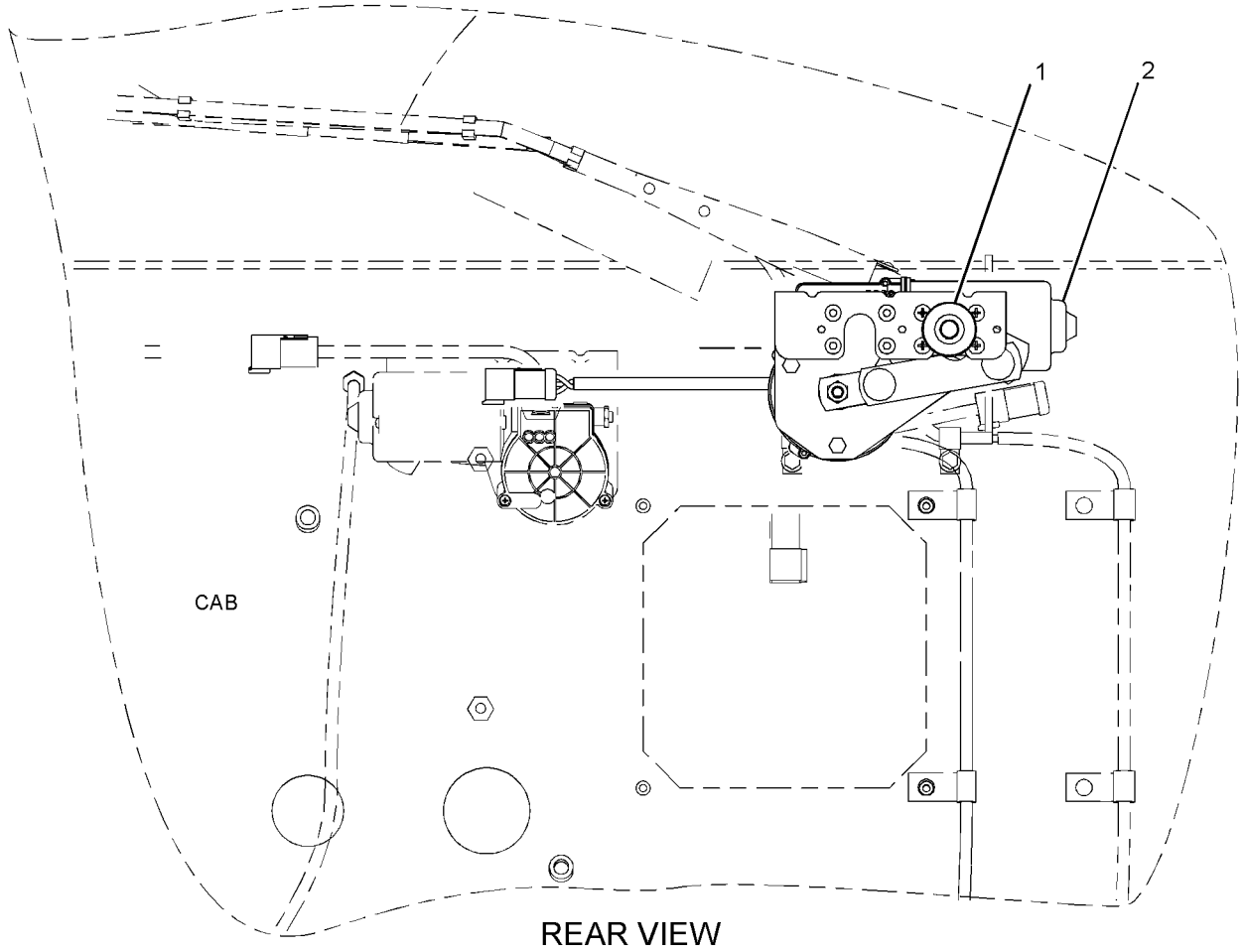

GRAPHIC #1 **<END>** g02053114

OPERATOR STATION

304-4212 MOUNTING GP-ANTENNA

S/N: BXY1-UP

AN ATTACHMENT

SMCS-7338, 7606 **i02673394**

NOTE	REF NO	GRAPHIC REF	PART NUMBER	QTY	PART NAME 1 2 3 4 5 6 (PRODUCT LEVEL)	SEE PAGE
	1	1	**3S-2093**	1	STRAP-CABLE	
	2	1	**7K-1181**	6	STRAP-CABLE	
	3	1	**136-5490**	1	BUSHING (RADIO MOUNT)	
	4	1	**200-5728**	1	HARNESS AS-RADIO	
		1	**160-3518**	1	KIT-RECEPTACLE (8-PIN)	
					(INCLUDES RECEPTACLE AS AND WEDGE)	
	5	1	**284-9055**	1	ANTENNA AS	
	6	1	**296-7575**	1	PLATE AS	
	7	1	**304-4173**	1	BRACKET	
	8	1	**122-8705**	1	U-BOLT	
M	9	1	**6V-2313**	2	BOLT (M5X0.8X30-MM)	
	10	1	**7X-7729**	1	WASHER (11X25X3-MM THK)	
	11	1	**8T-4121**	3	WASHER-HARD (11X21X2.5-MM THK)	
M	12	1	**8T-4133**	2	NUT (M10X1.5-THD)	
M	13	1	**8T-4136**	1	BOLT (M10X1.5X25-MM)	
M	14	1	**8T-4195**	1	BOLT (M10X1.5X30-MM)	
	15	1	**9G-1307**	1	GROMMET	
	16	1	**9X-8256**	2	WASHER (6.6X12X2-MM THK)	

M-METRIC PART

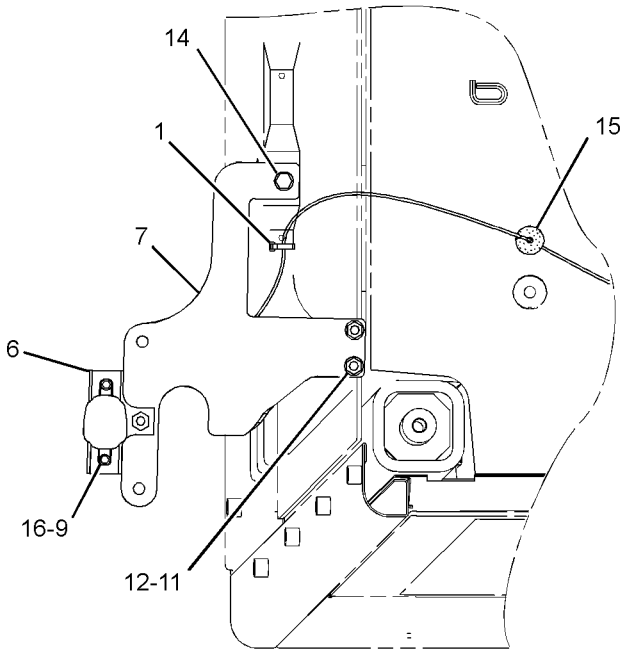

VIEW A-A

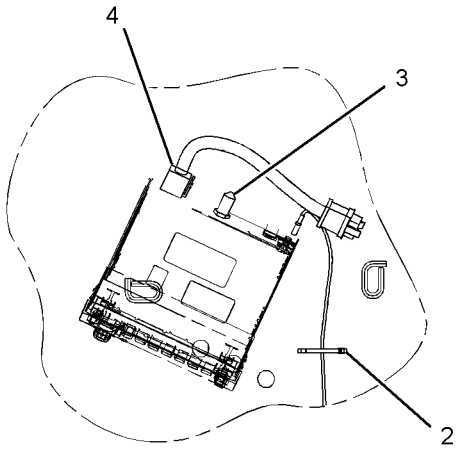

VIEW B-B

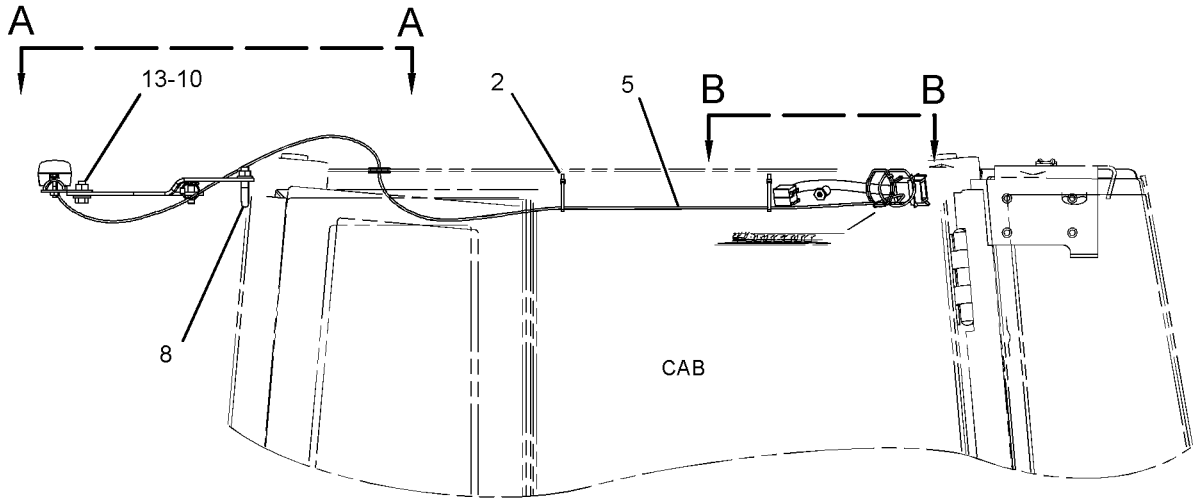

RIGHT SIDE VIEW

GRAPHIC #1 **<END>** g01355205

OPERATOR STATION

325-0132 MOUNTING GP-ANTENNA

S/N: BXY1-UP

AN ATTACHMENT

SMCS-7338, 7606 **i03079241**

NOTE	REF NO	GRAPHIC REF	PART NUMBER	QTY	PART NAME 1 2 3 4 5 6 (PRODUCT LEVEL)	SEE PAGE
	1	1	**7K-1181**	7	STRAP-CABLE	
	2	1	**284-9055**	1	ANTENNA AS	
	3	1	**296-7575**	1	PLATE AS	
	4	1	**304-4173**	1	BRACKET	
	5	1	**122-8705**	1	U-BOLT	
M	6	1	**6V-2313**	2	BOLT (M5X0.8X30-MM)	
	7	1	**7X-7729**	1	WASHER (11X25X3-MM THK)	
	8	1	**8T-4121**	3	WASHER-HARD (11X21X2.5-MM THK)	
M	9	1	**8T-4133**	3	NUT (M10X1.5-THD)	
M	10	1	**8T-4136**	1	BOLT (M10X1.5X25-MM)	
M	11	1	**8T-4195**	1	BOLT (M10X1.5X30-MM)	
	12	1	**9G-1307**	1	GROMMET	
	13	1	**9X-8256**	2	WASHER (6.6X12X2-MM THK)	

M-METRIC PART

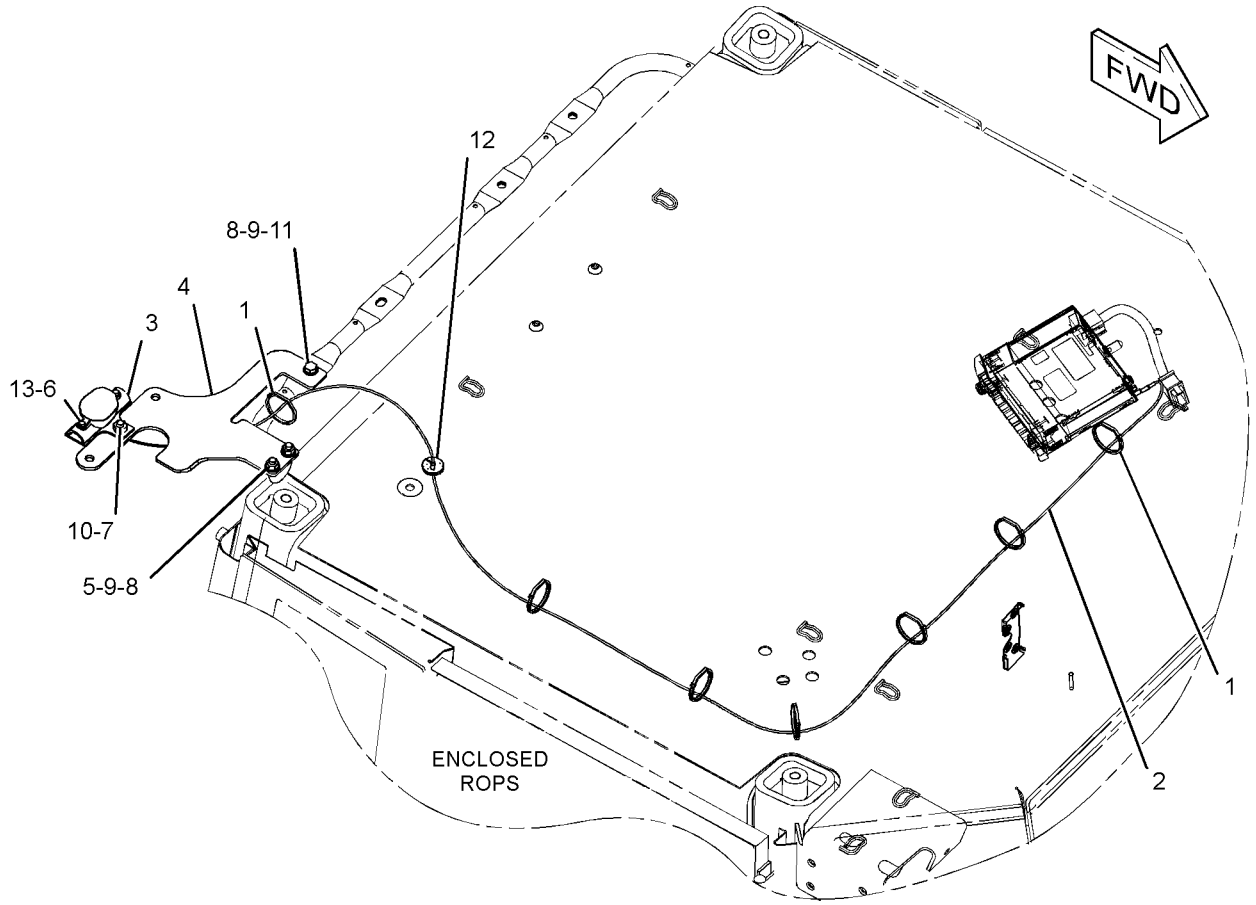

GRAPHIC #1 **<END>** g01686275

OPERATOR STATION

183-4007 MOUNTING GP-CAB

S/N: BXY1-1899

PART OF 227-3200 OPERATOR AR

SMCS-7301 **i01372121**

NOTE	REF NO	GRAPHIC REF	PART NUMBER	QTY	PART NAME 1 2 3 4 5 6 (PRODUCT LEVEL)	SEE PAGE
	1	1	**138-8861**	4	WASHER AS	
	2	1	**138-8862**	8	MOUNT	
	3	1	**138-8863**	4	SLEEVE	
	4	1	**138-8864**	4	WASHER (39X135X20-MM THK)	
	5	1	**177-3579**	1	SHROUD	
	6	1	**8T-5463**	4	WASHER (39X66X5-MM THK)	
M	7	1	**9X-2046**	5	SCREW-TRUSS HEAD	
M	8	1	**9X-6626**	4	BOLT (M36X4X200-MM)	

M-METRIC PART

183-4007 **MOUNTING GP-CAB** *(contd.)* **i01372121**

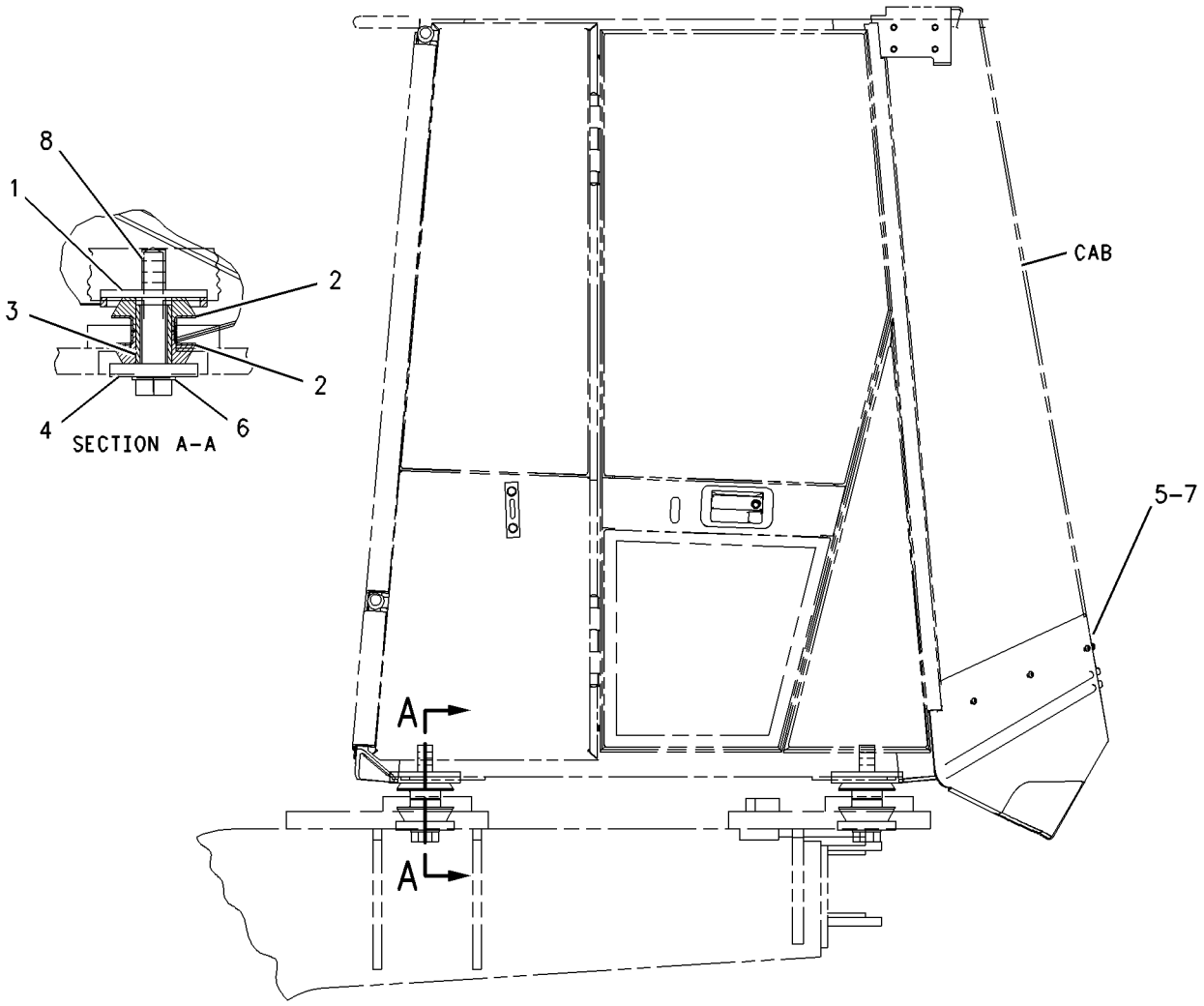

GRAPHIC #1 **<END>** g00724154

OPERATOR STATION

292-6890 MOUNTING GP-CAB

S/N: BXY1900-UP

PART OF 292-6092, 346-3822 OPERATOR AR

SMCS-7301 **i03091661**

NOTE	REF NO	GRAPHIC REF	PART NUMBER	QTY	PART NAME 1 2 3 4 5 6 (PRODUCT LEVEL)	SEE PAGE
	1	1	**138-8861**	4	WASHER AS	
	2	1	**138-8862**	8	MOUNT	
	3	1	**138-8863**	4	SLEEVE (36-MM)	
	4	1	**138-8864**	4	WASHER (39X135X20-MM THK)	
	5	1	**177-3579**	1	SHROUD	
	6	1	**8T-5463**	4	WASHER (39X66X5-MM THK)	
M	7	1	**9X-2046**	10	SCREW-TRUSS HEAD (M6X1X35-MM)	
M	8	1	**9X-6626**	4	BOLT (M36X4X200-MM)	

M-METRIC PART

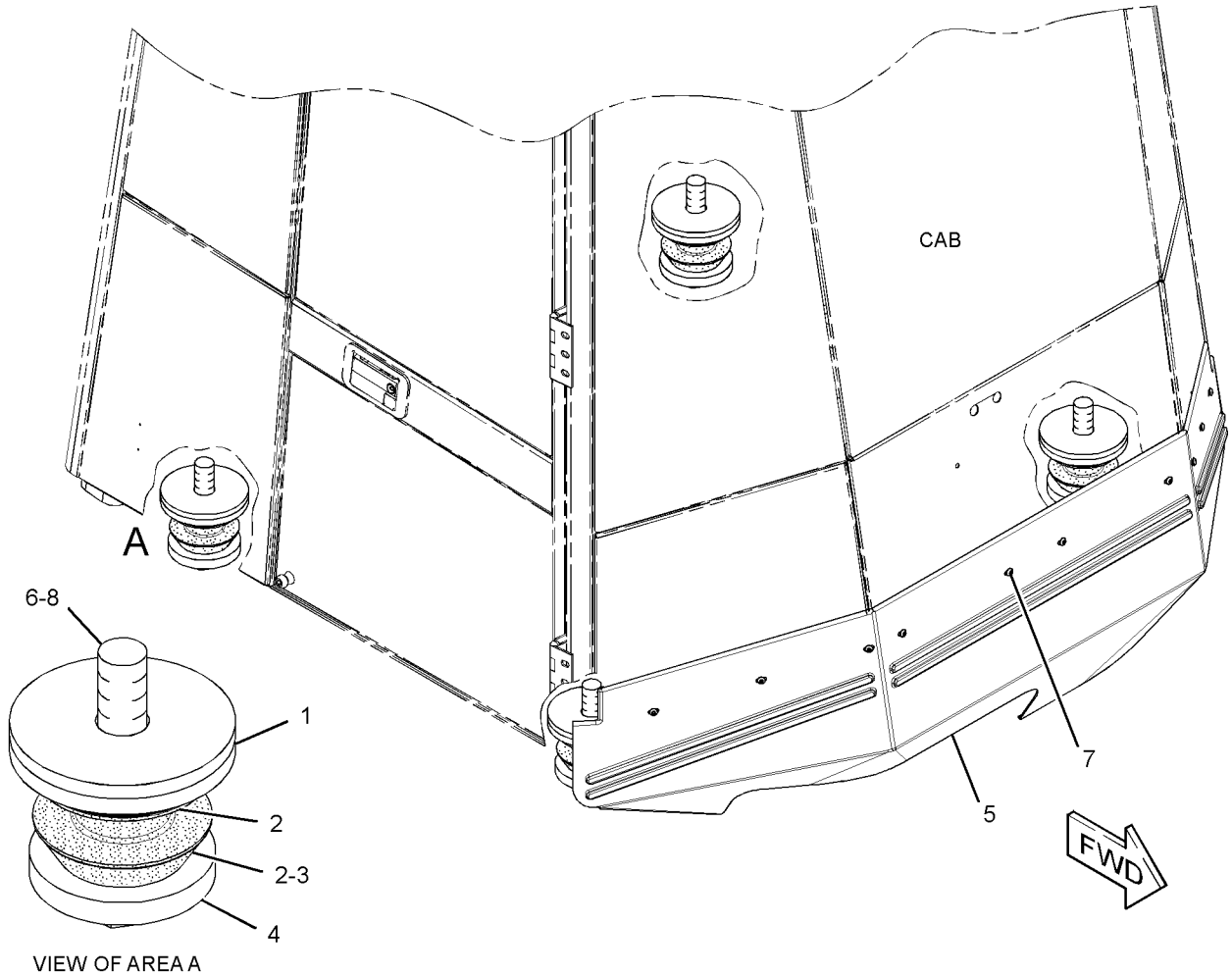

GRAPHIC #1 **<END>** g01606573

OPERATOR STATION

308-2726 MOUNTING GP-CAB

S/N: BXY1900-UP
PART OF 308-2725 OPERATOR AR
AN ATTACHMENT

SMCS-7301 **i03091669**

NOTE	REF NO	GRAPHIC REF	PART NUMBER	QTY	PART NAME 1 2 3 4 5 6 (PRODUCT LEVEL)	SEE PAGE
	1	1	**138-8861**	4	WASHER AS	
	2	1	**138-8862**	8	MOUNT	
	3	1	**138-8863**	4	SLEEVE (36-MM)	
	4	1	**138-8864**	4	WASHER (39X135X20-MM THK)	
	7	1	**189-7409**	1	SHROUD (LH)	
	8	1	**189-7456**	1	SHROUD (RH)	
	11	1	**5P-4115**	10	WASHER-HARD (7.2X19X2-MM THK)	
M	12	1	**8T-4138**	10	BOLT (M6X1X20-MM)	
	14	1	**8T-5463**	4	WASHER (39X66X5-MM THK)	
M	15	1	**9X-6626**	4	BOLT (M36X4X200-MM)	

M-METRIC PART

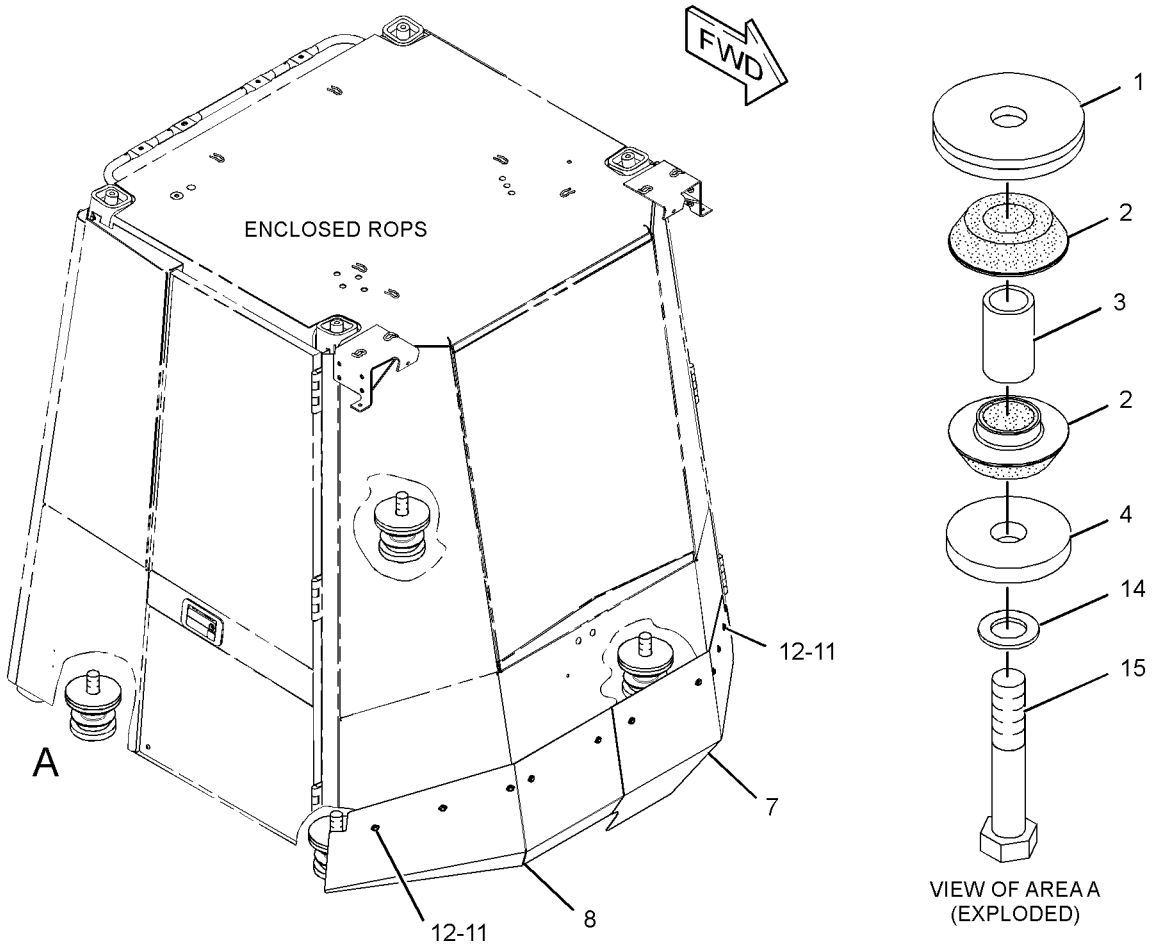

GRAPHIC #1 **<END>** g01609618

OPERATOR STATION

227-3200 OPERATOR AR

S/N: BXY1-1899

PART OF 225-5432 CHASSIS AR

SMCS-7301 **i01941249**

NOTE	PART NUMBER	QTY	PART NAME 1 2 3 4 5 6 (PRODUCT LEVEL)	SEE PAGE
Y	*227-3190*	1	CAB AR	1702
Y	*162-6884*	1	INSTALLATION GP-CONTROLS	1758
Y	*183-4007*	1	MOUNTING GP-CAB	1816

Y-SEPARATE ILLUSTRATION

<END>

292-6092 OPERATOR AR

S/N: BXY1900-3999

PART OF 284-2735 CHASSIS AR

SMCS-7301 **i03470229**

NOTE	PART NUMBER	QTY	PART NAME 1 2 3 4 5 6 (PRODUCT LEVEL)	SEE PAGE
Y	*292-6110*	1	CAB AR	1703
Y	*162-6884*	1	INSTALLATION GP-CONTROLS	1758
			S/N: BXY1900-2490	
Y	*327-6917*	1	INSTALLATION GP-CONTROLS (PARKING BRAKE)	1760
			S/N: BXY2491-3999	
Y	*292-6890*	1	MOUNTING GP-CAB	1818
	330-7802	1	AIR CONDITIONER GP	
			S/N: BXY2810-3999	
	110-6393	1	PLATE-INSTRUCTION (AIR CONDITIONER)	

Y-SEPARATE ILLUSTRATION

<END>

308-2725 OPERATOR AR

S/N: BXY1900-UP

PART OF 2Q-8722, 2Q-8733, 2Q-8744, 2Q-8749, 2Q-8752, 2Q-8753 STEEL MILL AR AN ATTACHMENT

SMCS-7301 **i03471180**

NOTE	PART NUMBER	QTY	PART NAME 1 2 3 4 5 6 (PRODUCT LEVEL)	SEE PAGE
Y	*308-2727*	1	CAB AR	1704
Y	*162-6884*	1	INSTALLATION GP-CONTROLS	1758
			S/N: BXY1900-2490	
Y	*327-6917*	1	INSTALLATION GP-CONTROLS (PARKING BRAKE)	1760
			S/N: BXY2491-UP	
Y	*308-2726*	1	MOUNTING GP-CAB	1819
	330-7802	1	AIR CONDITIONER GP	
			S/N: BXY2810-UP	
	110-6393		PLATE-INSTRUCTION (AIR CONDITIONER)	

Y-SEPARATE ILLUSTRATION

<END>

OPERATOR STATION

346-3822 OPERATOR AR

S/N: BXY4000-UP

PART OF 284-2735 CHASSIS AR

SMCS-7301 **i03765260**

NOTE	PART NUMBER	QTY	PART NAME 1 2 3 4 5 6 (PRODUCT LEVEL)	SEE PAGE
Y	*346-3826*	1	CAB AR	1705
Y	*327-6917*	1	INSTALLATION GP-CONTROLS (PARKING BRAKE)	1760
Y	*292-6890*	1	MOUNTING GP-CAB	1818
	330-7802	1	AIR CONDITIONER GP	
	110-6393	1	PLATE-INSTRUCTION (AIR CONDITIONER)	

Y-SEPARATE ILLUSTRATION

<END>

OPERATOR STATION

178-0604 PAN GP-BACKREST—CLOTH

S/N: BXY1-UP

PART OF 178-0603 SEAT GP

SMCS-7312 **i02925403**

NOTE	REF NO	GRAPHIC REF	PART NUMBER	QTY	PART NAME 1 2 3 4 5 6 (PRODUCT LEVEL)	SEE PAGE
	1	1	**164-4883**	1	KNOB-LUMBAR	
Y	2	1	*178-0605*	1	PAN GP-BACKREST (LUMBAR)	1823
	3	1	**233-6745**	1	CUSHION AS (CLOTH)	
	4	1	**250-4628**	3	PLUG	
	5	1	**8T-7566**	1	PIN-SPRING	

Y-SEPARATE ILLUSTRATION

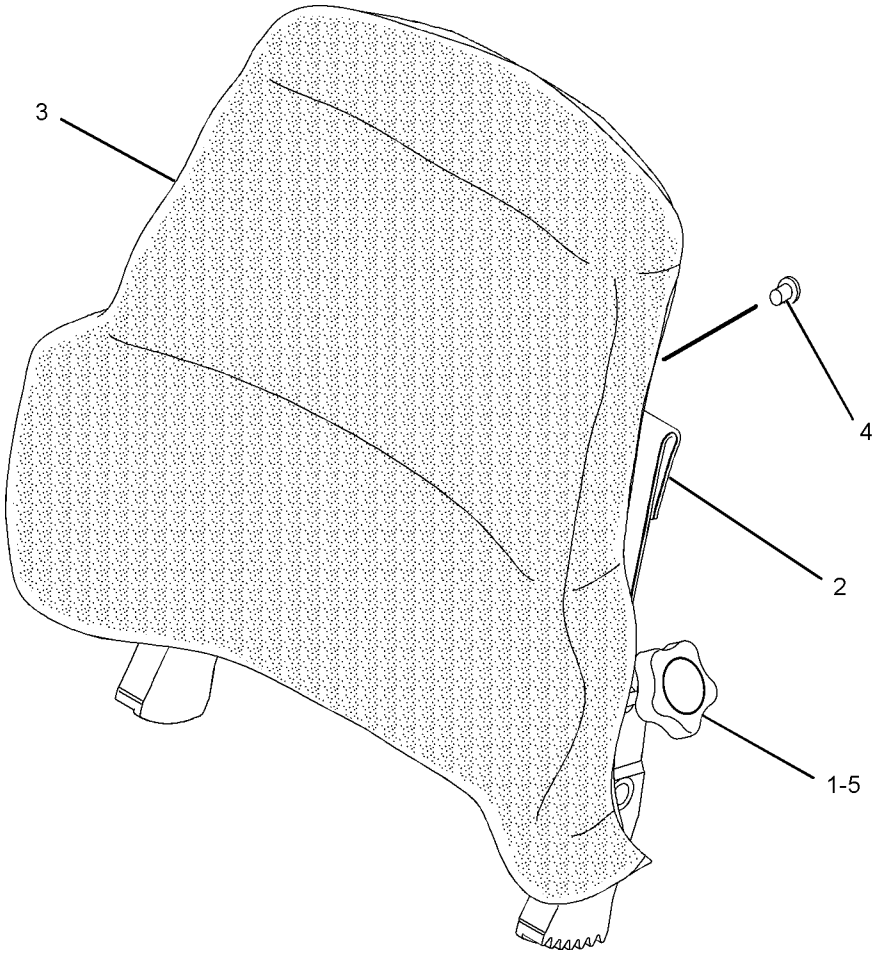

GRAPHIC #1 **<END>** g01092296

OPERATOR STATION

178-0605 PAN GP-BACKREST—LUMBAR

S/N: BXY1-UP

PART OF 178-0604 PAN GP-BACKREST

SMCS-7312 **i02475257**

NOTE	REF NO	GRAPHIC REF	PART NUMBER	QTY	PART NAME 1 2 3 4 5 6 (PRODUCT LEVEL)	SEE PAGE
	1	1	**4K-9429**	8	RIVET-POP	
	2	1	**5P-7957**	1	LANYARD	
	3	1	**136-1543**	1	PLATE AS-LUMBAR	
	4	1	**173-2052**	1	RETAINER	
	5	1	**178-7907**	1	HOLDER	
	6	1	**261-5694**	1	PAN AS-BACKREST	

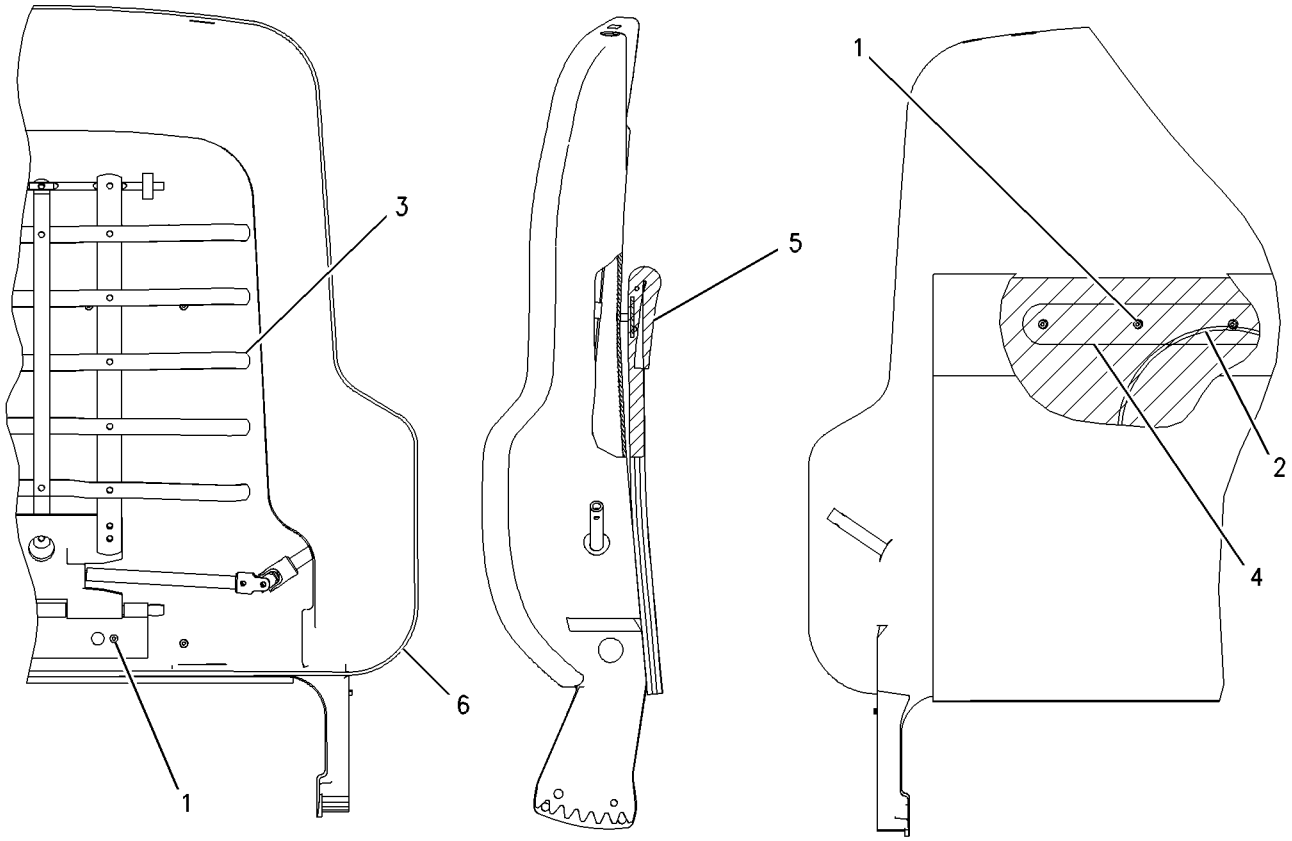

GRAPHIC #1 **<END>** g00716497

OPERATOR STATION

292-6402 PAN GP-BACKREST—LUMBAR

S/N: BXY1-UP
PART OF 292-9237 PAN GP-BACKREST
ALSO AN ATTACHMENT

SMCS-7312 **i03095783**

NOTE	REF NO	GRAPHIC REF	PART NUMBER	QTY	PART NAME 1 2 3 4 5 6 (PRODUCT LEVEL)	SEE PAGE
	1	1	**5P-7957**	1	LANYARD	
	2	1	**136-1543**	1	PLATE AS-LUMBAR	
	3	1	**173-2052**	1	RETAINER	
	4	1	**178-7907**	1	HOLDER	
	5	1	**261-5694**	1	PAN AS-BACKREST	
	6	1	**322-3161**	1	SPRING	
	7	1	**4K-9429**	8	RIVET-POP	

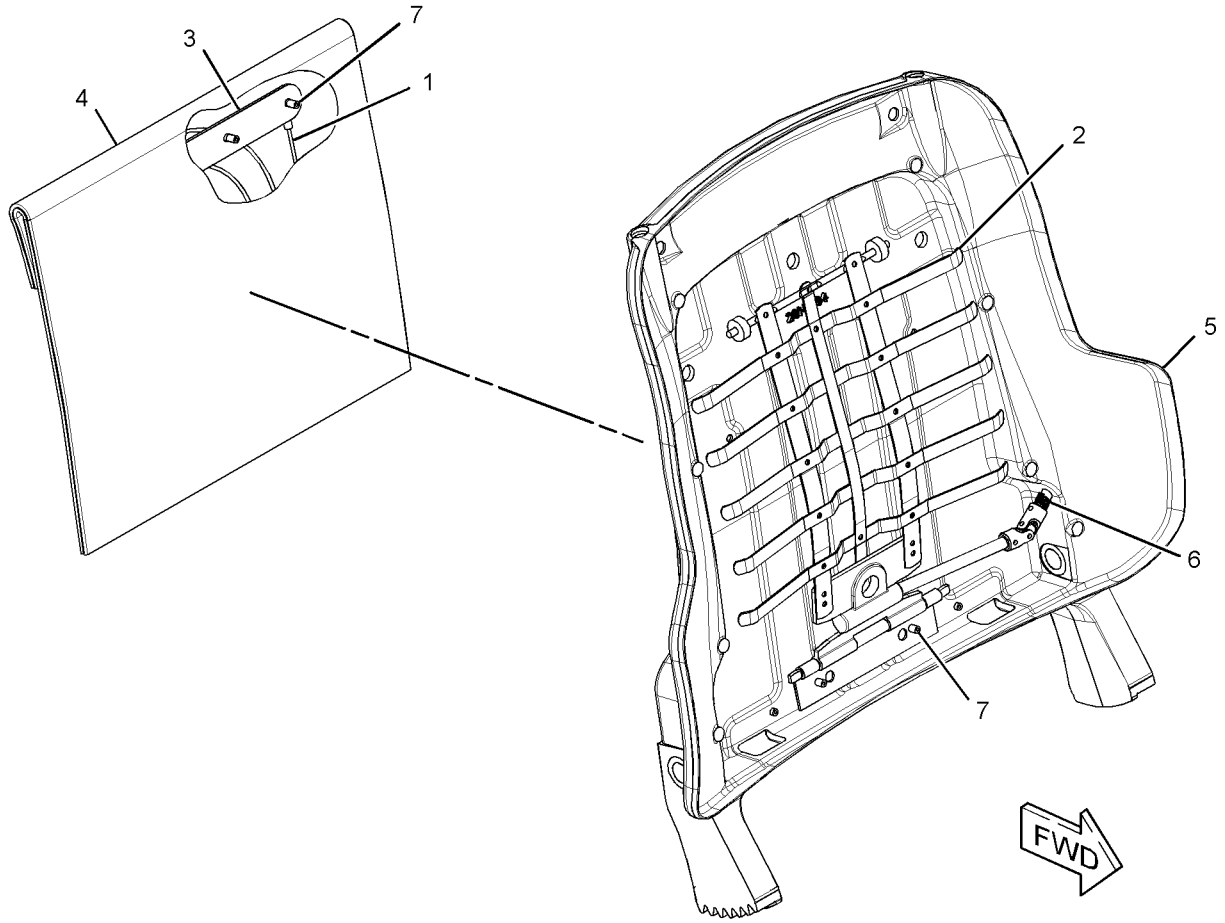

GRAPHIC #1 **<END>** g01577333

OPERATOR STATION

292-9237 PAN GP-BACKREST

S/N: BXY1-UP
PART OF 178-0603 SEAT GP
ALSO AN ATTACHMENT

SMCS-7312 **i02649684**

NOTE	REF NO	GRAPHIC REF	PART NUMBER	QTY	PART NAME 1 2 3 4 5 6 (PRODUCT LEVEL)	SEE PAGE
	1	1	**164-4883**	1	KNOB-LUMBAR	
	2	1	**250-4628**	3	PLUG	
	3	1	**292-6097**	1	CUSHION AS-BACK	
Y	4	1	**292-6402**	1	PAN GP-BACKREST (LUMBAR)	1824
	5	1	**5P-0537**	2	WASHER-HARD (7.2X14.5X2-MM THK)	
	6	1	**6V-8969**	2	SCREW-BUTTON HEAD (1/4-20X0.5-IN)	
	7	1	**8T-7566**	1	PIN-SPRING	

Y-SEPARATE ILLUSTRATION

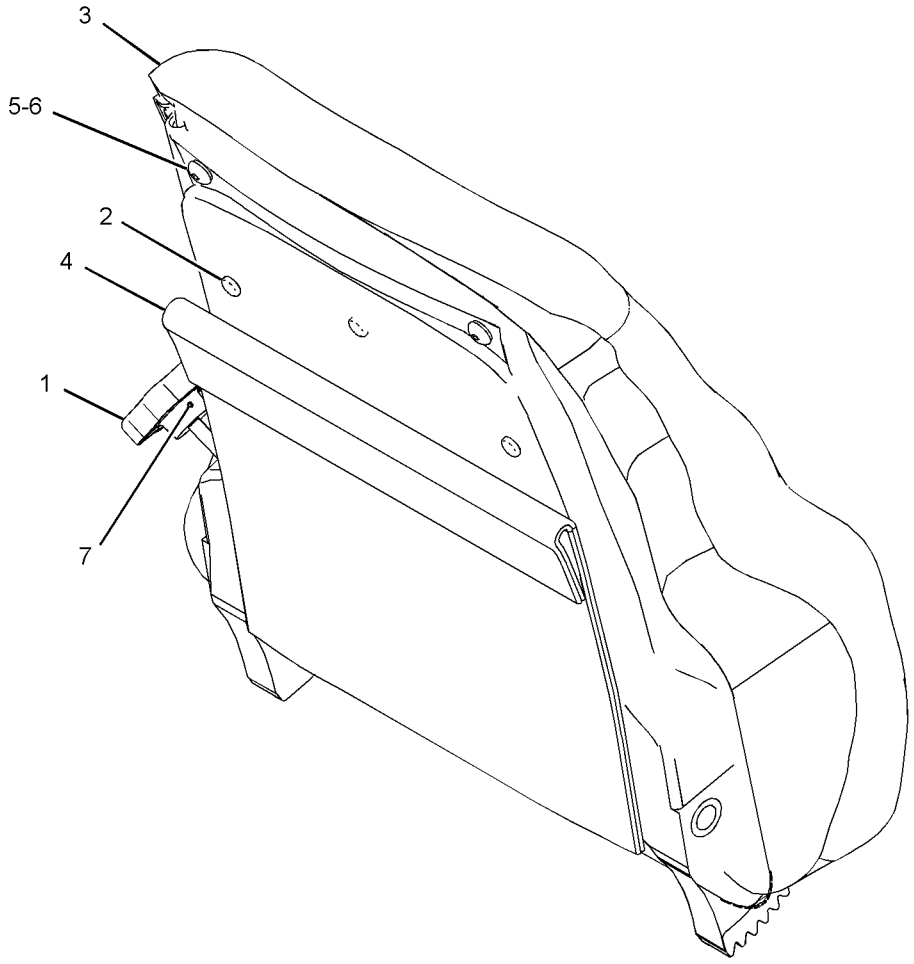

GRAPHIC #1 **<END>** g01336870

OPERATOR STATION

301-4162 PAN GP-BACKREST

S/N: BXY4000-UP
PART OF 285-8423 SEAT GP
AN ATTACHMENT

SMCS-7312 **i02902994**

NOTE	REF NO	GRAPHIC REF	PART NUMBER	QTY	PART NAME 1 2 3 4 5 6 (PRODUCT LEVEL)	SEE PAGE
	1	1	**164-4883**	1	KNOB-LUMBAR	
	2	1	**250-4628**	3	PLUG	
	3	1	**292-6107**	1	CUSHION AS-BACK	
	4	1	*299-2277*	1	PAN GP-BACKREST	
		1	**4K-9429**	2	RIVET-POP	
		1	**136-1543**	1	PLATE AS-LUMBAR	
		1	**261-5694**	1	PAN AS-BACKREST	
	5	1	**5P-0537**	2	WASHER-HARD (7.2X14.5X2-MM THK)	
	6	1	**6V-8969**	2	SCREW-BUTTON HEAD (1/4-20X0.5-IN)	
	7	1	**8T-7566**	1	PIN-SPRING	

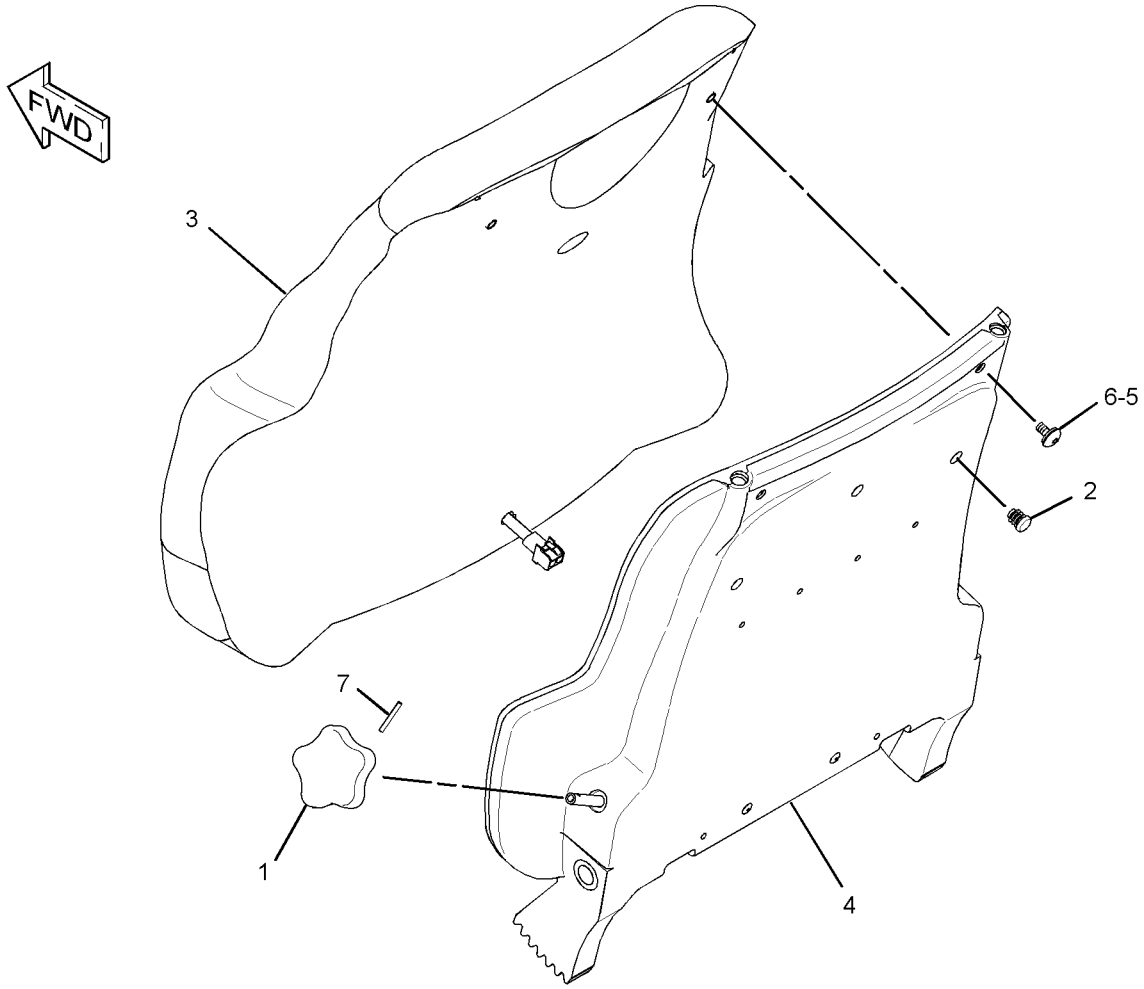

GRAPHIC #1 **<END>** g01449552

OPERATOR STATION

241-5785 PAN GP-SEAT

S/N: BXY4000-UP
PART OF 285-8423 SEAT GP
AN ATTACHMENT

SMCS-7312 **i02757228**

NOTE	REF NO	GRAPHIC REF	PART NUMBER	QTY	PART NAME 1 2 3 4 5 6 (PRODUCT LEVEL)	SEE PAGE
	1	1	**3S-2093**	2	STRAP-CABLE	
	2	1	**246-4304**	1	CUSHION AS-SEAT	
	3	1	**246-4306**	1	HOUSING-SWITCH	
	4	1	**246-4307**	1	HARNESS AS-WIRING (HEATED SEAT)	
	5	1	**262-1352**	1	PAN-SEAT BACK	
	6	1	**266-9281**	2	CLIP	
	7	1	**8T-9082**	6	RIVET-POP	

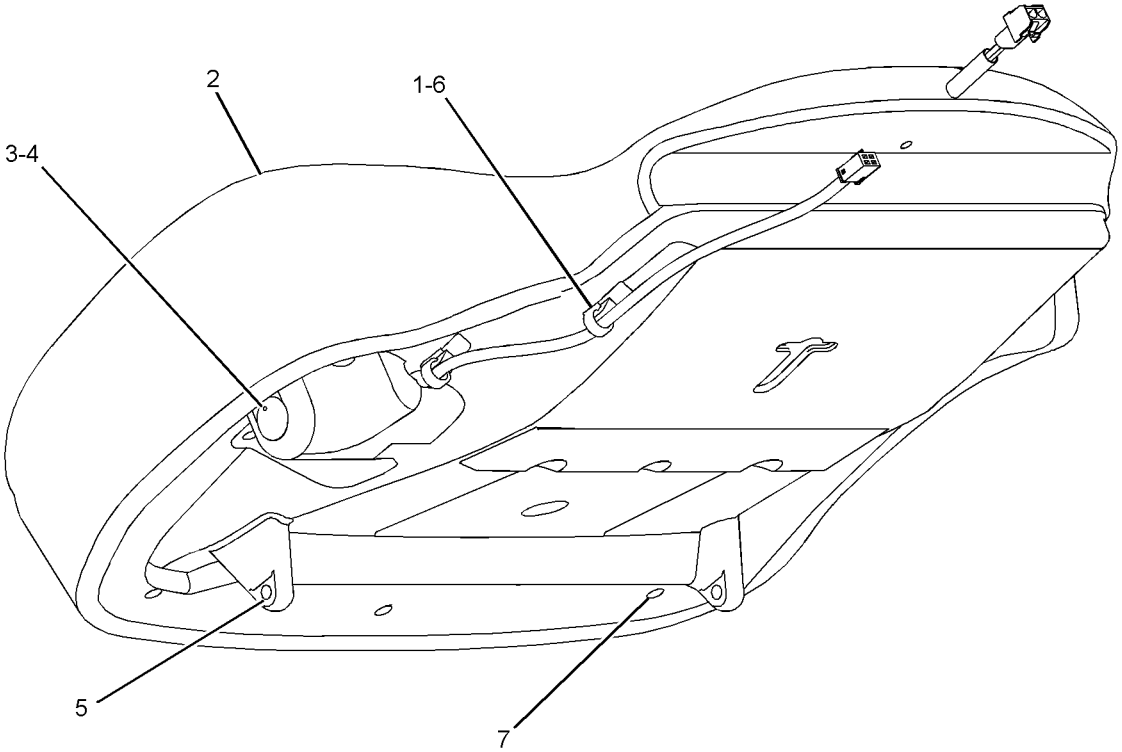

GRAPHIC #1 **<END>** g01260044

OPERATOR STATION

227-3192 PANEL GP-INSTRUMENT—UPPER

S/N: BXY1-UP

PART OF 227-3190, 292-6110, 308-2727, 346-3826 CAB AR

ALSO AN ATTACHMENT

SMCS-7451 **i03621242**

NOTE	REF NO	GRAPHIC REF	PART NUMBER	QTY	PART NAME 1 2 3 4 5 6 (PRODUCT LEVEL)	SEE PAGE
	1	1	**112-5419**	1	BEZEL (RH)	
	2	1	**116-0434**	1	FILM-UPPER PANEL (RH-FRONT)	
	3	1	**138-4837**	1	BEZEL (LH)	
	4	1	**112-5574**	1	FILM-SWITCH PANEL (REAR, RH)	
	5	1	**138-7823**	1	FILM-UPPER PANEL (LH)	
	6	1	**229-2257**	1	FILM-PANEL (REAR)	
M	7	1	**7Y-7256**	12	SCREW-TRUSS HEAD (M4X0.7X35-MM)	

M-METRIC PART

227-3192 **PANEL GP-INSTRUMENT** *(contd.)* **i03621242**

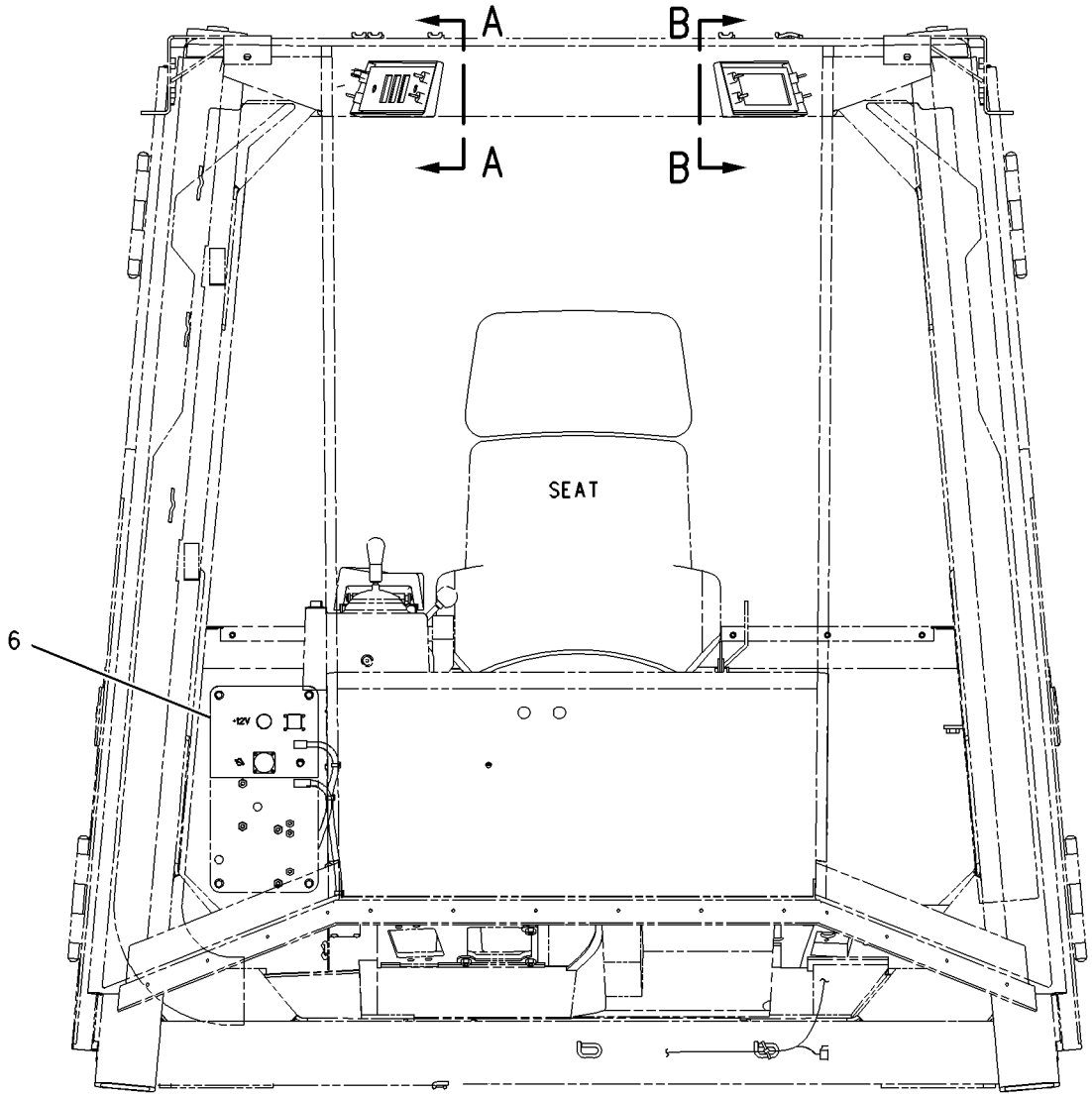

FRONT VIEW

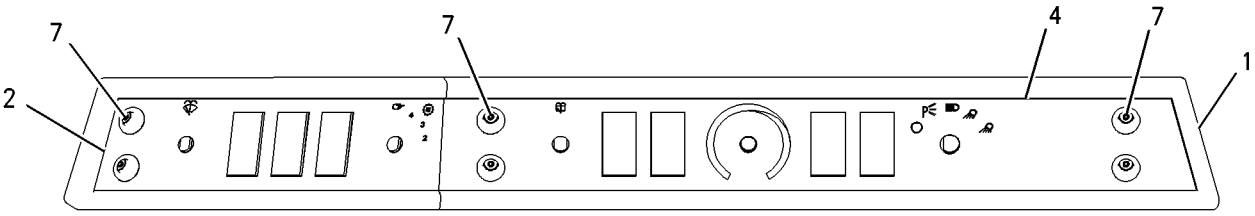

VIEW A-A

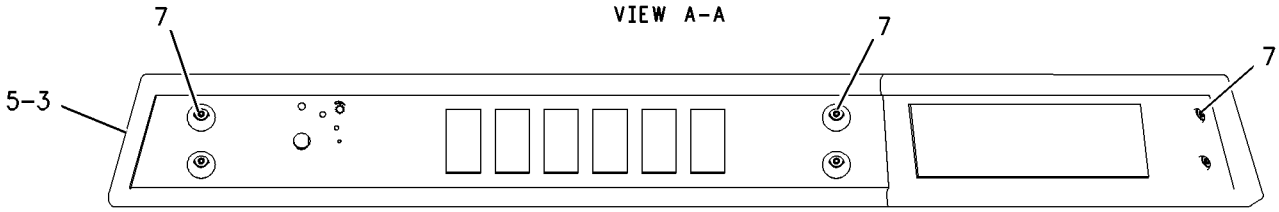

VIEW B-B

GRAPHIC #1 **<END>** g01006038

OPERATOR STATION

227-3198 PANEL GP-INSTRUMENT—LOWER

S/N: BXY1-UP

PART OF 227-3190, 292-6110, 308-2727, 346-3826 CAB AR

ALSO AN ATTACHMENT

SMCS-7451 **i01941396**

NOTE	REF NO	GRAPHIC REF	PART NUMBER	QTY	PART NAME 1 2 3 4 5 6 (PRODUCT LEVEL)	SEE PAGE
	1	1	**110-4215**	1	BEZEL (CENTER)	
	2	1	**110-4216**	1	BEZEL-RH	
	3	1	**110-4217**	1	BEZEL-LH	
	4	1	**230-9085**	1	FILM-MONITOR (CATERPILLAR MONITORING SYSTEM)	
	5	1	**230-9087**	1	FILM-PANEL (INDICATOR)	
M	6	1	**9X-1046**	10	SCREW (M4X0.7X18MM)	

M-METRIC PART

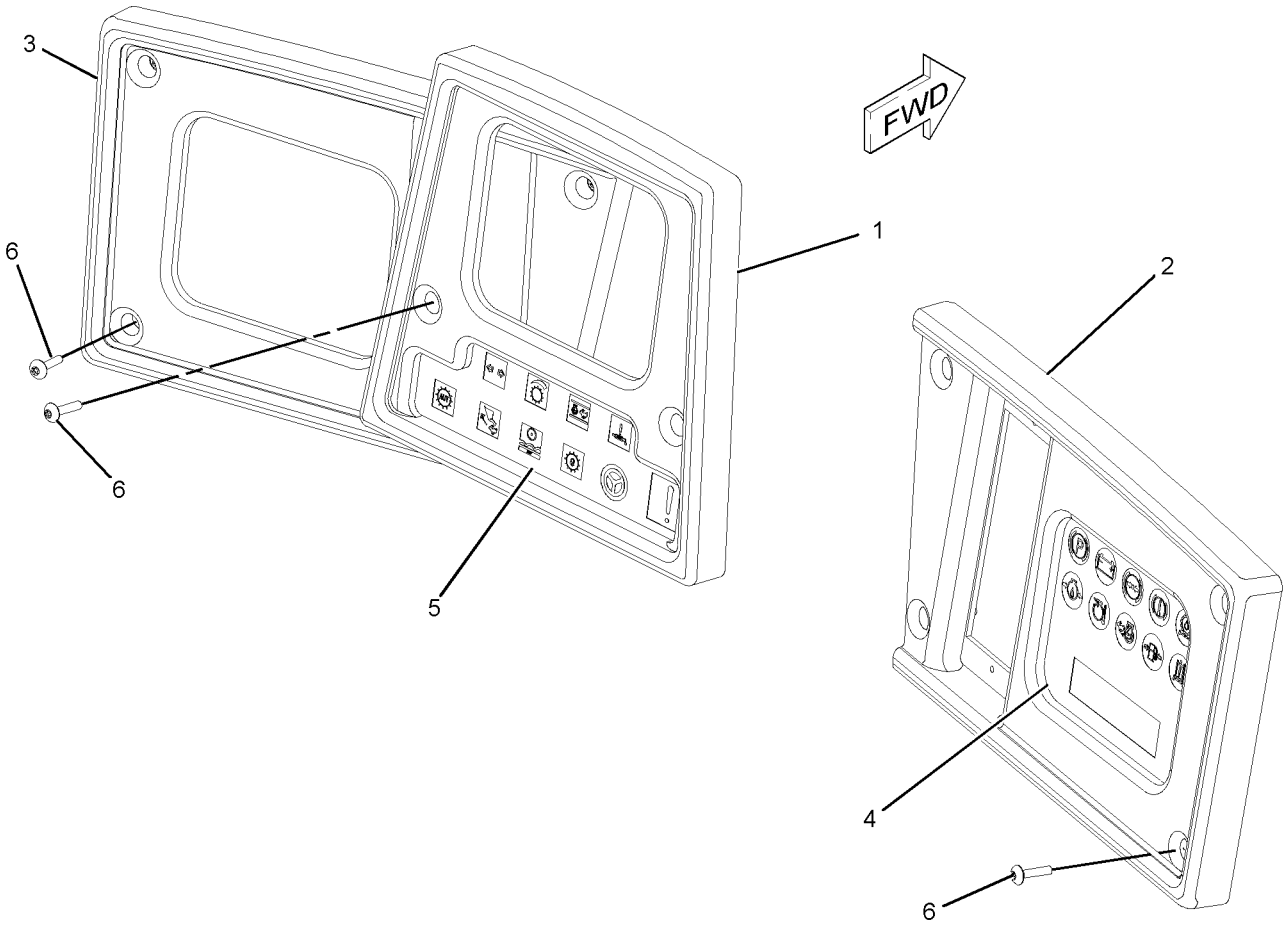

GRAPHIC #1 **<END>** g01020706

OPERATOR STATION

130-8176 PEDAL GP-GOVERNOR

S/N: BXY1-UP
PART OF 141-4645 PEDAL GP-GOVERNOR
ALSO AN ATTACHMENT

SMCS-1276 **i03560120**

NOTE	REF NO	GRAPHIC REF	PART NUMBER	QTY	PART NAME 1 2 3 4 5 6 (PRODUCT LEVEL)	SEE PAGE
	1	1	**123-9431**	1	COVER	
	2	1	**7G-7053**	1	GROMMET	
	3	1	**160-6353**	1	PLATE AS	
Y	4	1	**204-7949**	1	SENSOR GP-POSITION (ROTARY) (THROTTLE)	415
	5	1	**160-6365**	2	SCREW	
	6	1	**160-6366**	2	CLIP	
	7	1	**140-2961**	1	KIT-ROLLER (FOOT BRAKE CONTROL)	
					(INCLUDES SNAP RING, ROLLER AND ROLLER PIN)	
	8	1	**274-9189**	1	KIT-TREADLE PIN (FOOT BRAKE CONTROL)	
					(INCLUDES BUSHINGS, PIN, AND PUSH NUT)	
	9	1	**140-2963**	2	SCREW	

Y-SEPARATE ILLUSTRATION

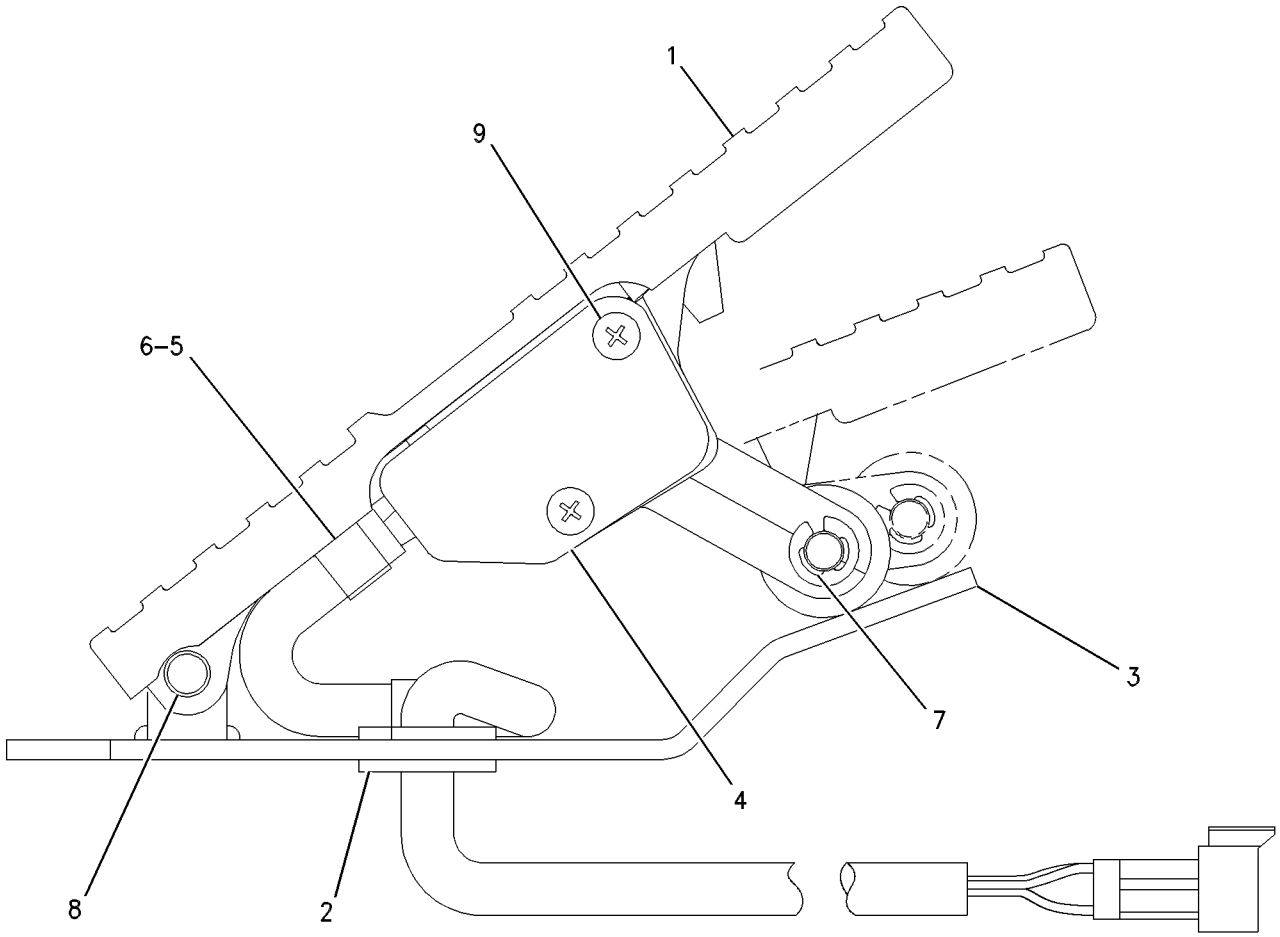

GRAPHIC #1 **<END>** g00495129

OPERATOR STATION

141-4645 PEDAL GP-GOVERNOR

S/N: BXY1-UP

PART OF 227-3190, 292-6110, 308-2727, 346-3826 CAB AR

ALSO AN ATTACHMENT

SMCS-1276 **i01501848**

NOTE	REF NO	GRAPHIC REF	PART NUMBER	QTY	PART NAME 1 2 3 4 5 6 (PRODUCT LEVEL)	SEE PAGE
Y	1	1	**130-8176**	1	PEDAL GP-GOVERNOR	1831
	2	1	**8T-4224**	4	WASHER-HARD (8.8X16X2MM THK)	
M	3	1	**8T-7547**	4	BOLT (M8X1.25X30MM)	
	4	1	**136-3970**	1	GASKET	

M-METRIC PART
Y-SEPARATE ILLUSTRATION

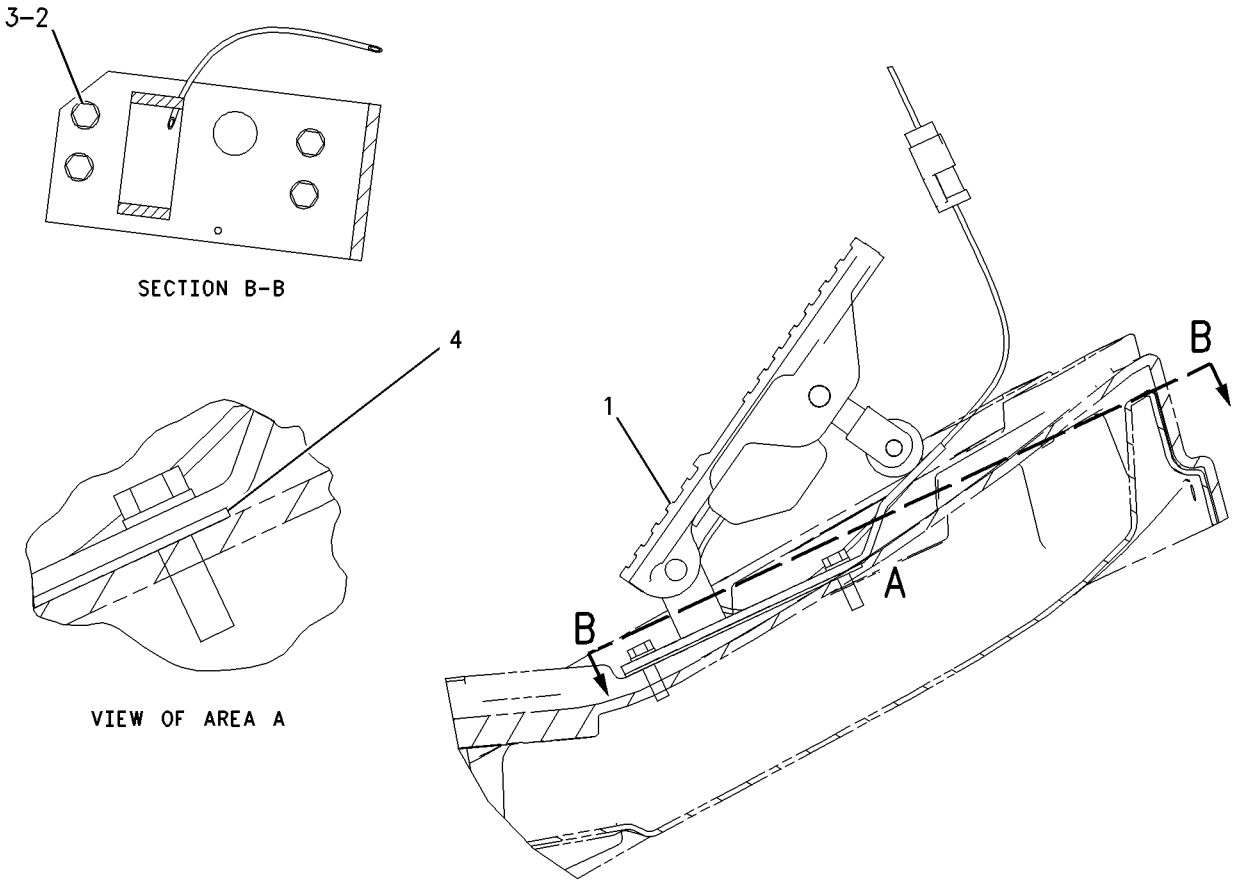

GRAPHIC #1 **<END>** g00779453

OPERATOR STATION

136-3357 PLATFORM GP

S/N: BXY1-UP

PART OF 172-4387 PLATFORM GP-CAB

SMCS-7253 **i02394070**

NOTE	REF NO	GRAPHIC REF	PART NUMBER	QTY	PART NAME 1 2 3 4 5 6 (PRODUCT LEVEL)	SEE PAGE
	1	1	**2M-6102**	3	PIPE	
	2	1	**6V-2491**	38	RIVET-POP	
	3	1	**118-0040**	1	BRACKET	
	4	1	*125-3276*	1	PLATE AS	
M		1	**8T-3612**	3	NUT-WELD (M8X1.25-THD)	
	5	1	*136-3645*	1	PLATE AS	
M		1	**8T-3612**	4	NUT-WELD (M8X1.25-THD)	
	6	1	*163-5515*	1	PLATE AS	
M		1	**8T-3612**	3	NUT-WELD (M8X1.25-THD)	

M-METRIC PART

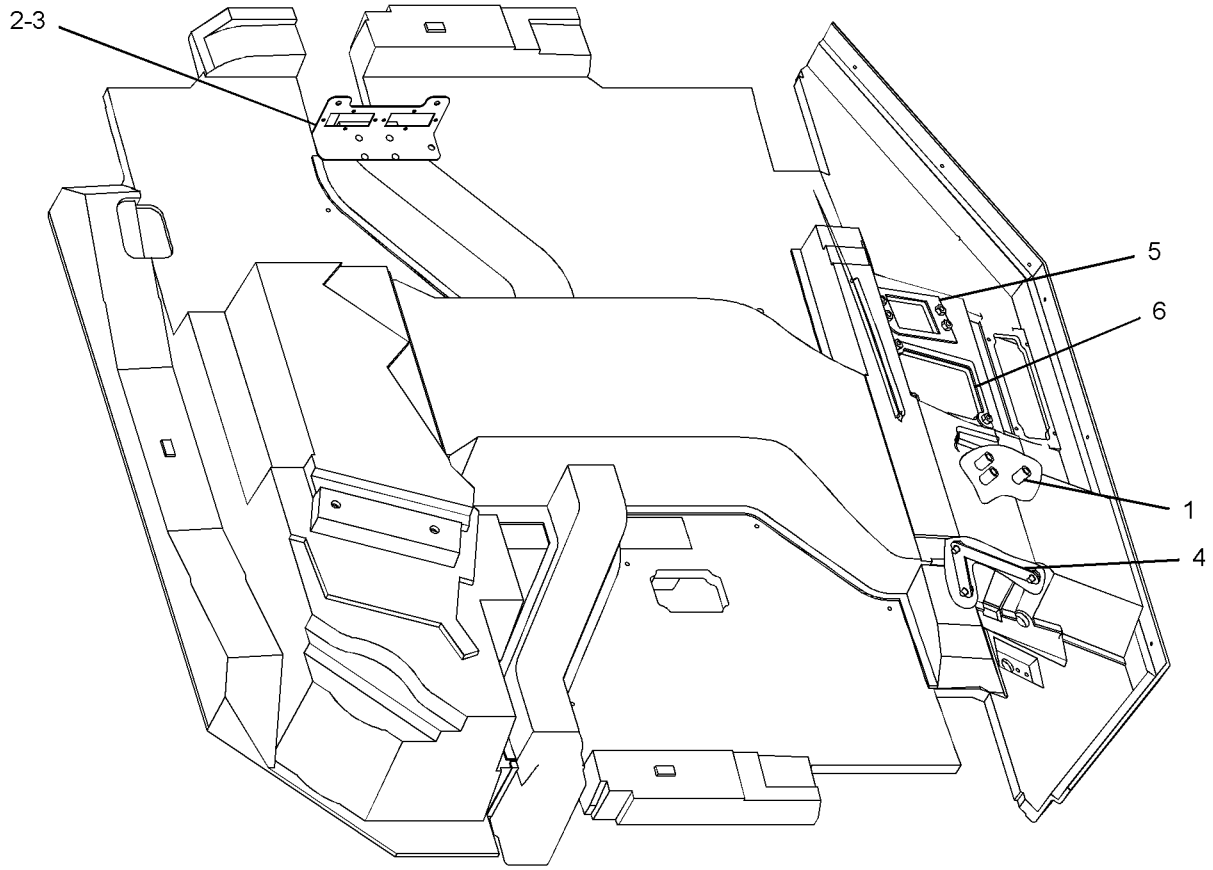

GRAPHIC #1 **<END>** g01195464

OPERATOR STATION

136-3357 PLATFORM GP

S/N: BXY1-1899

PART OF 172-4387 PLATFORM GP-CAB

SMCS-7253 **i02715758**

NOTE	REF NO	GRAPHIC REF	PART NUMBER	QTY	PART NAME 1 2 3 4 5 6 (PRODUCT LEVEL)	SEE PAGE
	1	1	**2M-6102**	3	PIPE	
	4	1	**125-3276**	1	PLATE AS	
M		1	**8T-3612**	4	NUT-WELD (M8X1.25-THD)	
	6	1	*136-3645*	1	PLATE AS	
M		1	**8T-3612**	3	NUT-WELD (M8X1.25-THD)	
	7	1	*163-5515*	1	PLATE AS	
M		1	**8T-3612**	4	NUT-WELD (M8X1.25-THD)	
	9	1	**6K-3273**	14	RIVET-POP	

M-METRIC PART

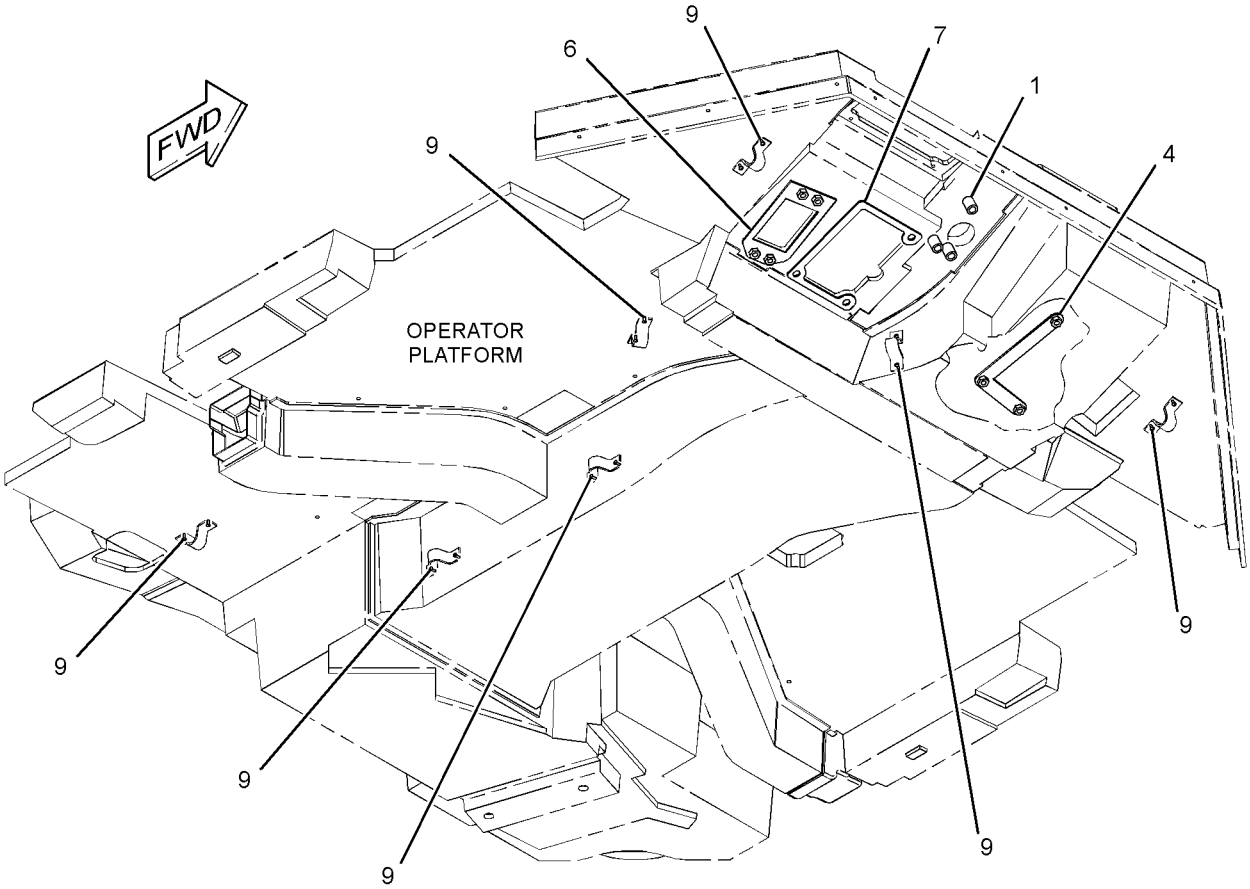

GRAPHIC #1 **<END>** g01363714

OPERATOR STATION

136-3357 PLATFORM GP

S/N: BXY1900-UP
PART OF 172-4387 PLATFORM GP-CAB
ALSO AN ATTACHMENT

SMCS-7253 **i02751905**

NOTE	REF NO	GRAPHIC REF	PART NUMBER	QTY	PART NAME 1 2 3 4 5 6 (PRODUCT LEVEL)	SEE PAGE
	1	1	**2M-6102**	3	PIPE	
	4	1	**125-3276**	1	PLATE AS	
M		1	**8T-3612**	3	NUT-WELD (M8X1.25-THD)	
	6	1	*136-3645*	1	PLATE AS	
M		1	**8T-3612**	4	NUT-WELD (M8X1.25-THD)	
	7	1	*163-5515*	1	PLATE AS	
M		1	**8T-3612**	3	NUT-WELD (M8X1.25-THD)	
C	9	1	**6K-3273**	16	RIVET-POP	

C-CHANGE FROM PREVIOUS TYPE
M-METRIC PART

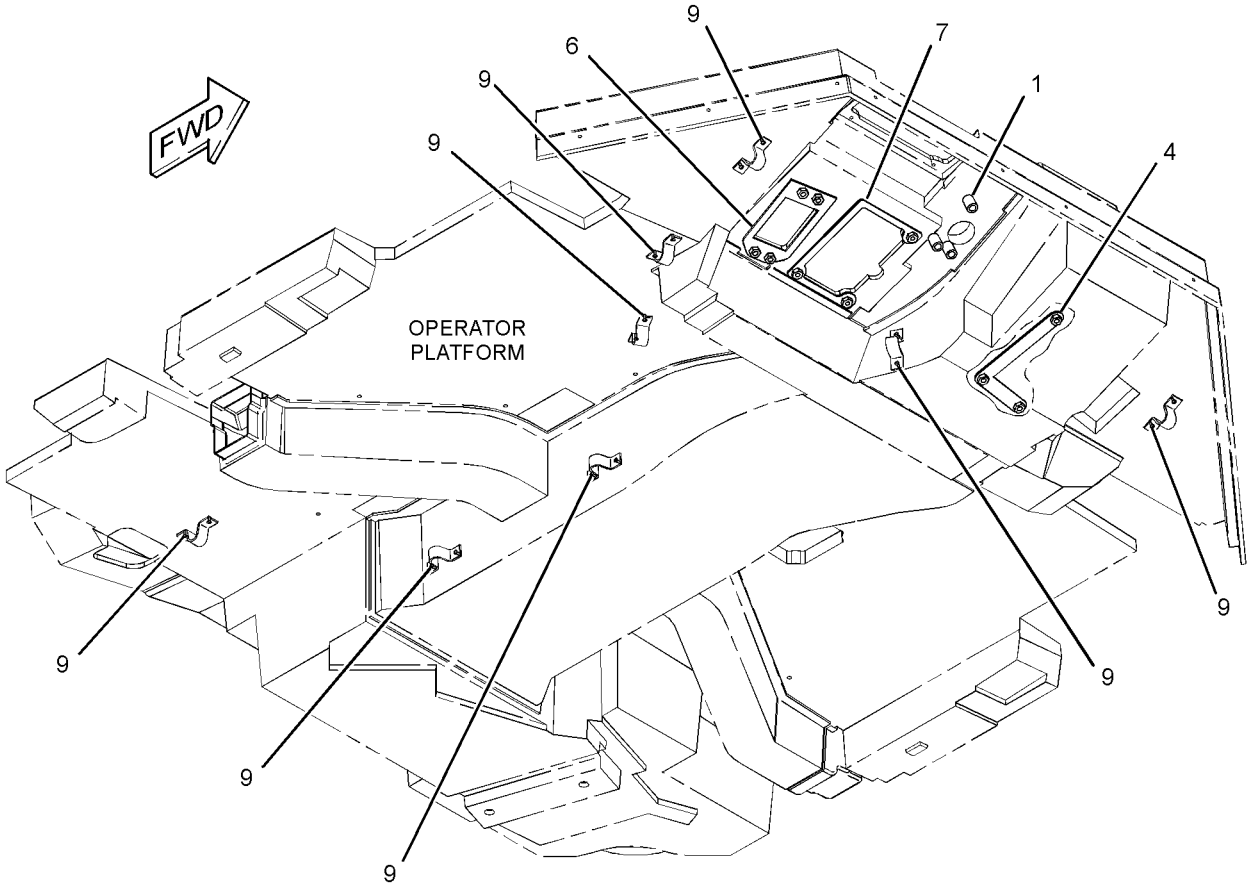

GRAPHIC #1 **<END>** g01382406

OPERATOR STATION

172-4387 PLATFORM GP-CAB

S/N: BXY1-1899

PART OF 228-9530 ROPS GP-ENCLOSED

SMCS-7253 **i01158717**

NOTE	REF NO	GRAPHIC REF	PART NUMBER	QTY	PART NAME 1 2 3 4 5 6 (PRODUCT LEVEL)	SEE PAGE
Y	1	1	**136-3357**	1	PLATFORM GP	1833
	2	1	**155-8354**	1	INSULATION	
	3	1	**155-8355**	1	INSULATION	
	4	1	**155-8356**	1	INSULATION	
	5	1	**159-7234**	1	INSULATION	

Y-SEPARATE ILLUSTRATION

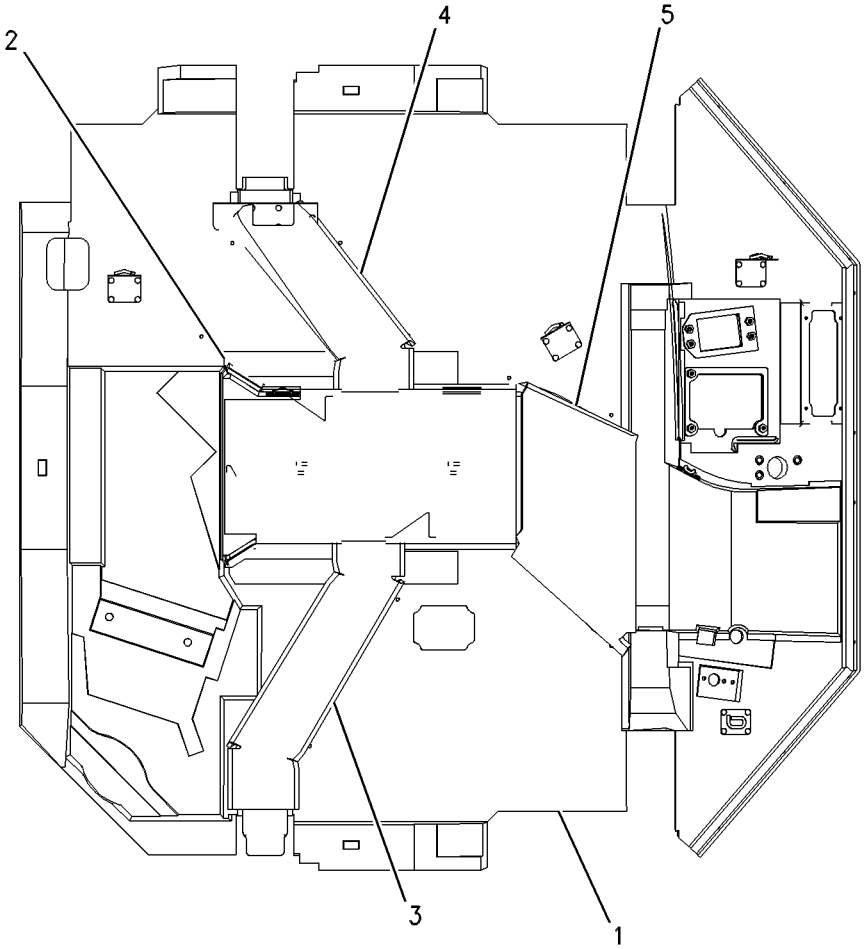

GRAPHIC #1 **<END>** g00620699

OPERATOR STATION

172-4387 PLATFORM GP-CAB

S/N: BXY1900-UP
PART OF 292-6893, 292-6895, 308-2708 ROPS GP-ENCLOSED
ALSO AN ATTACHMENT

SMCS-7253 **i02715775**

NOTE	REF NO	GRAPHIC REF	PART NUMBER	QTY	PART NAME 1 2 3 4 5 6 (PRODUCT LEVEL)	SEE PAGE
Y	1	1	**136-3357**	1	PLATFORM GP	1833
	2	1	**155-8354**	1	INSULATION	
	3	1	**155-8355**	1	INSULATION	
	4	1	**155-8356**	1	INSULATION	
	5	1	**159-7234**	1	INSULATION	
Y-SEPARATE ILLUSTRATION						

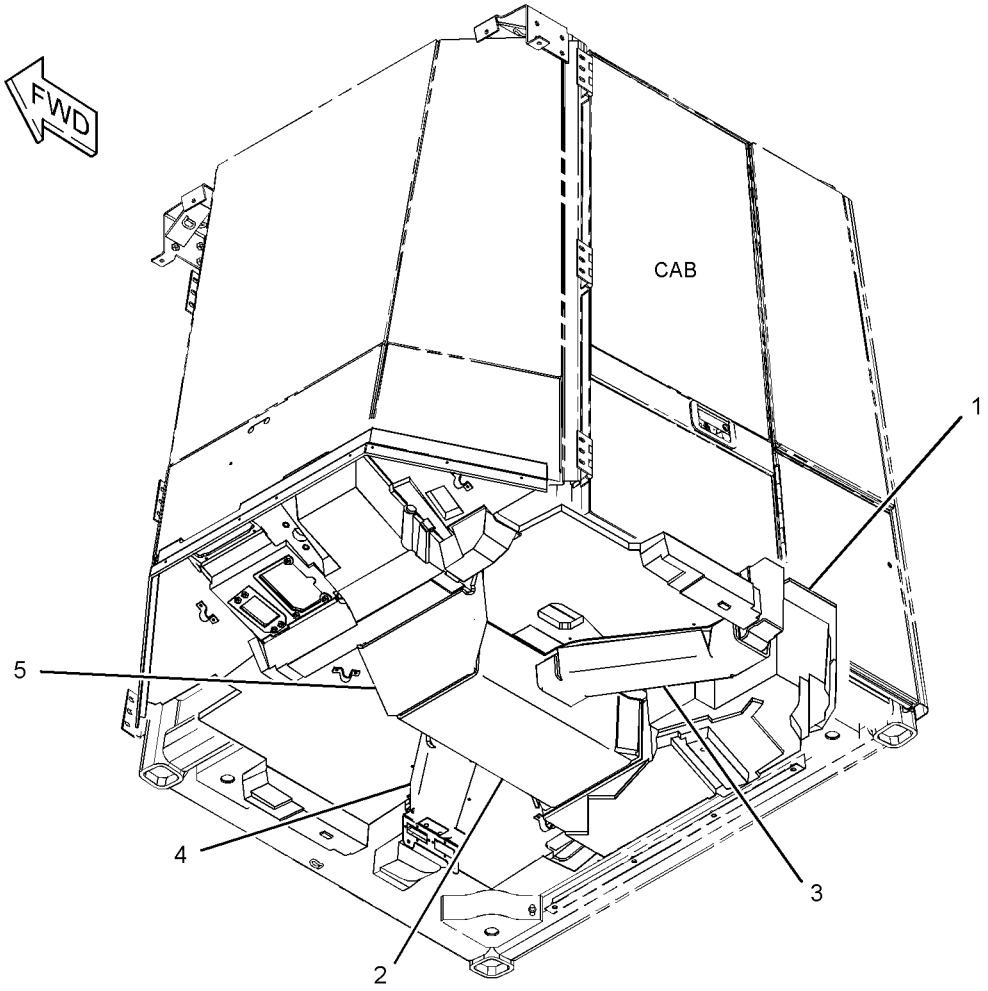

GRAPHIC #1 **<END>** g01364603

OPERATOR STATION

114-5124 PLATFORM GP-OPERATOR

S/N: BXY1-1899

PART OF 225-5432 CHASSIS AR

SMCS-7253 **i02743351**

NOTE	REF NO	GRAPHIC REF	PART NUMBER	QTY	PART NAME 1 2 3 4 5 6 (PRODUCT LEVEL)	SEE PAGE
	1	2	**6V-1635**	3	RIVET-POP	
	2	2	**134-6051**	2	SUPPORT AS	
					(EACH INCLUDES)	
M		2	**8T-3597**	4	NUT-WELD (M12X1.75-THD)	
M		2	**8Y-4489**	1	BOSS (M10X1.5-THD)	
M		2	**9R-2613**	2	BOSS-WELD (M10X1.5X25-MM)	
		2	**9R-4595**	1	BOSS (M12X1.75X30-MM)	
	3	2	**134-6052**	2	SUPPORT AS	
					(EACH INCLUDES)	
		2	**5G-6787**	1	BOSS	
		2	**7T-1099**	1	LINK	
M		2	**8T-3597**	11	NUT-WELD (M12X1.75-THD)	
	4	1	**134-6722**	1	PLATFORM AS (LH)	
M		1	**8T-3597**	8	NUT-WELD (M12X1.75-THD)	
	5	1	**134-6723**	1	PLATFORM AS (RH)	
M		1	**8T-3597**	9	NUT-WELD (M12X1.75-THD)	
	6	2	**134-7326**	1	SUPPORT AS	
M		2	**8T-3597**	5	NUT-WELD (M12X1.75-THD)	
	7	2	**138-2800**	1	PLATE AS	
M		2	**9R-2613**	2	BOSS-WELD (M10X1.5X25-MM)	
	8	2	**139-5544**	1	SHEET AS	
M		2	**8T-3597**	2	NUT-WELD (M12X1.75-THD)	
	9	2	**183-7532**	1	SHEET AS-RH	
	10	2	**184-1700**	1	PANEL AS	
	11	2	**183-7531**	1	SHEET AS-LH	
	12	2	**160-5877**	1	SHEET AS	
M		2	**8T-3597**	1	NUT-WELD (M12X1.75-THD)	
Y	13	1	*162-7599*	1	PLATFORM GP-OPERATOR	1844
	14	2	**195-0472**	1	SHEET	
	15	1	**168-1793**	1	BRACKET AS	
	16	2	**173-9195**	1	SHEET AS	
	17	2	**195-3162**	1	SHEET AS	
M		2	**8T-3597**	2	NUT-WELD (M12X1.75-THD)	
	18	2	**173-9197**	1	FLAP	
Y	19	1	*178-4139*	1	DOOR GP-STORAGE	1751
	20	1	**178-8486**	1	SHEET	
	21	1	**178-8504**	1	SHEET	
	22	1,2	**5P-1076**	44	WASHER-HARD (13.5X30X4-MM THK)	
M	23	1,2	**8T-4139**	40	BOLT (M12X1.75X30-MM)	
M	24	1	**8T-4179**	24	BOLT (M12X1.75X20-MM)	
M	25	1,2	**8T-4183**	20	BOLT (M12X1.75X40-MM)	
M	26	2	**8T-4192**	8	BOLT (M12X1.75X25-MM)	
	27	1,2	**8T-4223**	48	WASHER-HARD (13.5X25.5X3-MM THK)	
	28	2	**184-1699**	1	PANEL AS	
M	29	2	**8T-4137**	3	BOLT (M10X1.5X20-MM)	
	30	2	**7X-7729**	3	WASHER (11X25X3-MM THK)	
	31	2	**173-9198**	1	STRIP	

M-METRIC PART
Y-SEPARATE ILLUSTRATION

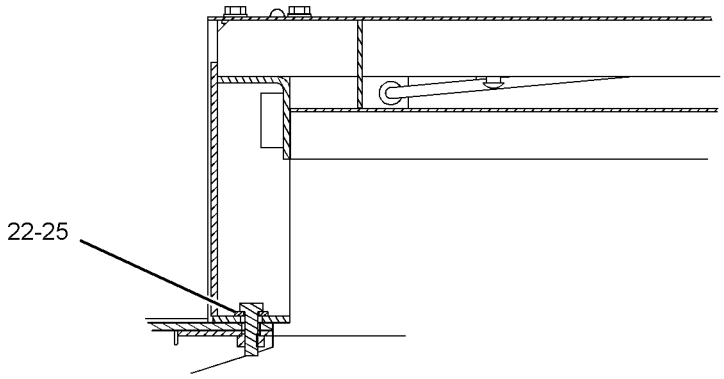

SECTION A-A

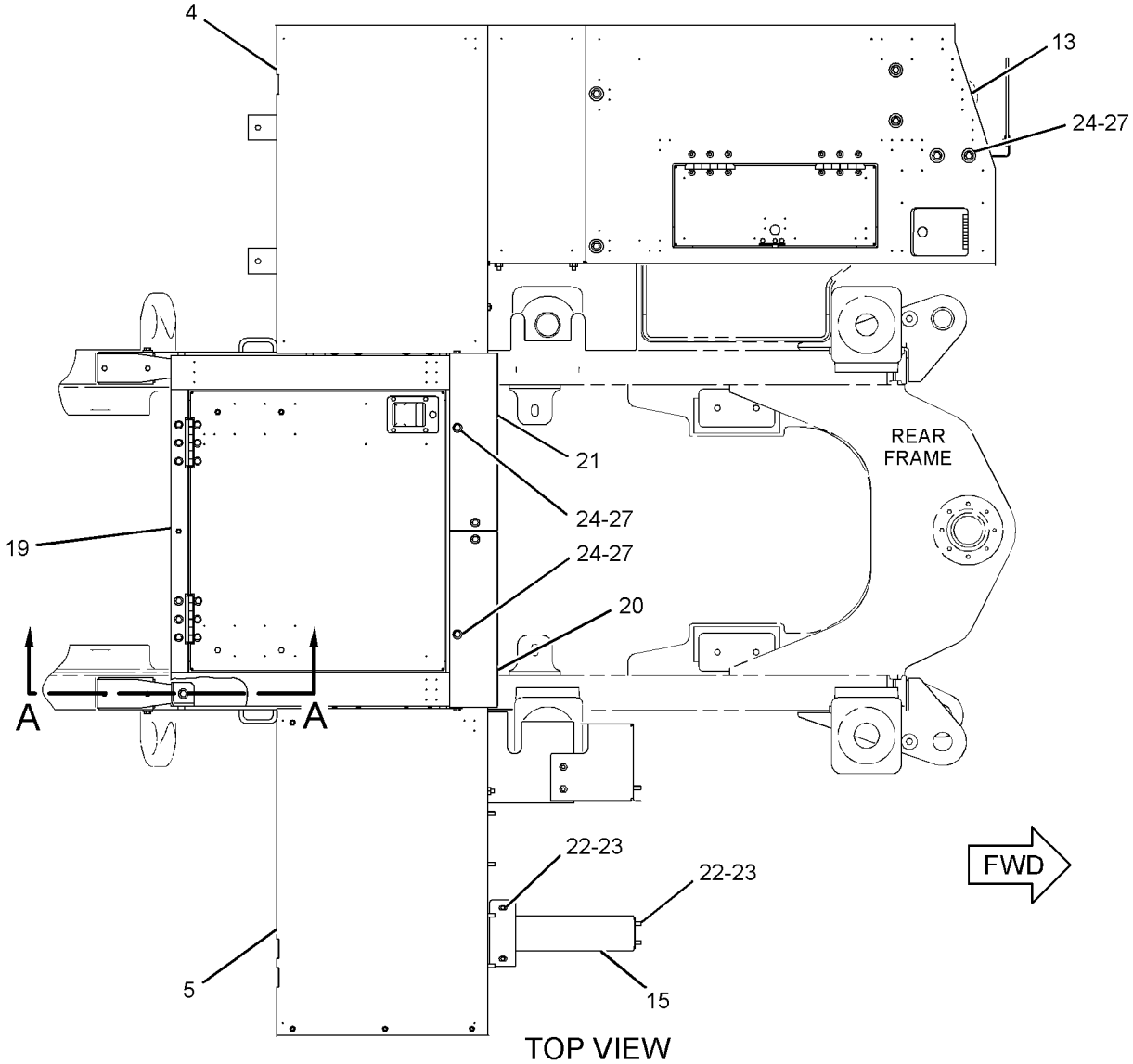

TOP VIEW

GRAPHIC #1 g01231703

114-5124 **PLATFORM GP-OPERATOR** *(contd.)* **i02743351**

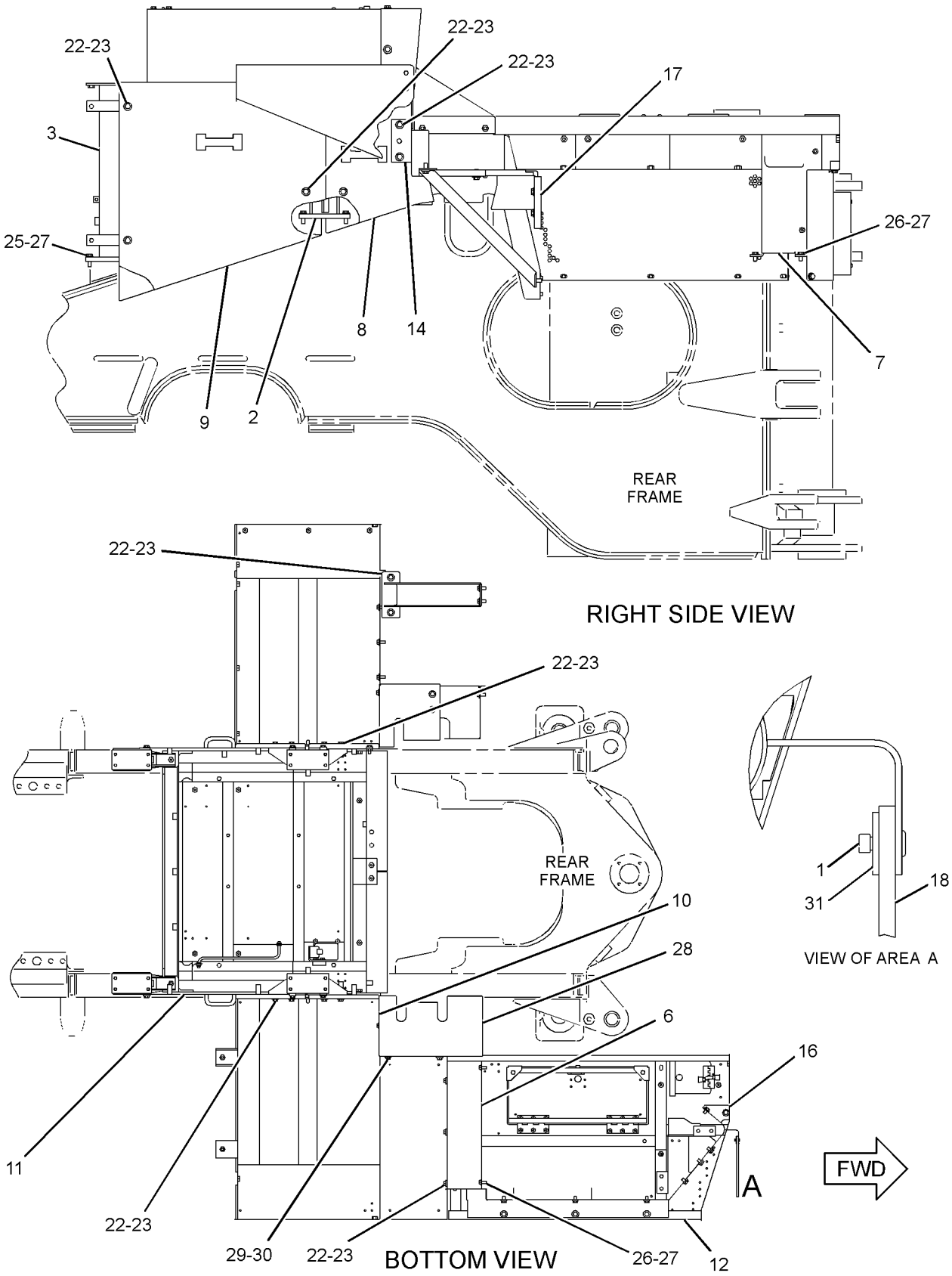

GRAPHIC #2

<END>

g01244082

OPERATOR STATION

114-5124 PLATFORM GP-OPERATOR

S/N: BXY1900-UP

PART OF 284-2735 CHASSIS AR

SMCS-7253 **i03123660**

NOTE	REF NO	GRAPHIC REF	PART NUMBER	QTY	PART NAME 1 2 3 4 5 6 (PRODUCT LEVEL)	SEE PAGE
C	1	1	**3J-9887**	8	PLATE	
	2	2	**6V-1635**	3	RIVET-POP	
	3	1	**316-1835**	2	SUPPORT AS	
	4	1	**134-6052**	2	SUPPORT AS	
	5	1	**134-6722**	1	PLATFORM AS (LH)	
	6	1	**134-6723**	1	PLATFORM AS (RH)	
	7	2	**134-7326**	1	SUPPORT AS	
M		2	**8T-3597**	5	NUT-WELD (M12X1.75-THD)	
	8	1	**138-2800**	1	PLATE AS	
	9	1	**323-3544**	1	SHEET AS	
	10	2	**160-5877**	1	SHEET AS	
M		2	**8T-3597**	1	NUT-WELD (M12X1.75-THD)	
Y	11	1	*162-7599*	1	PLATFORM GP-OPERATOR	1844
	12	1	**168-1793**	1	BRACKET AS	
	13	2	**173-9195**	1	SHEET AS	
	14	2	**173-9197**	1	FLAP	
	15	2	**173-9198**	1	STRIP	
Y	16	1	*178-4139*	1	DOOR GP-STORAGE	1751
	17	1	**178-8486**	1	SHEET	
	18	1	**178-8504**	1	SHEET	
	19	2	**183-7531**	1	SHEET AS-LH	
	20	1	**183-7532**	1	SHEET AS-RH	
	21	2	**184-1699**	1	PANEL AS	
	22	2	**323-3543**	1	PANEL AS	
		2	**138-6108**	2	SPACER (8.7X20X45-MM THK)	
		2	**139-5546**	1	SHEET	
	23	1	**195-0472**	1	SHEET	
	24	1	**195-3162**	1	SHEET AS	
M		1	**8T-3597**	1	NUT-WELD (M12X1.75-THD)	
C	25	1,2	**5P-1076**	48	WASHER-HARD (13.5X30X4-MM THK)	
	26	2	**7X-7729**	3	WASHER (11X25X3-MM THK)	
M	27	2	**8T-4137**	3	BOLT (M10X1.5X20-MM)	
M	28	1,2	**8T-4139**	40	BOLT (M12X1.75X30-MM)	
M	29	1,2	**8T-4179**	24	BOLT (M12X1.75X20-MM)	
M	30	1	**8T-4183**	16	BOLT (M12X1.75X40-MM)	
M	31	1,2	**8T-4192**	8	BOLT (M12X1.75X25-MM)	
	32	1,2	**8T-4223**	48	WASHER-HARD (13.5X25.5X3-MM THK)	
CM	33	1	**096-9986**	8	BOLT (M12X1.75X55-MM)	

C-CHANGE FROM PREVIOUS TYPE
M-METRIC PART
Y-SEPARATE ILLUSTRATION

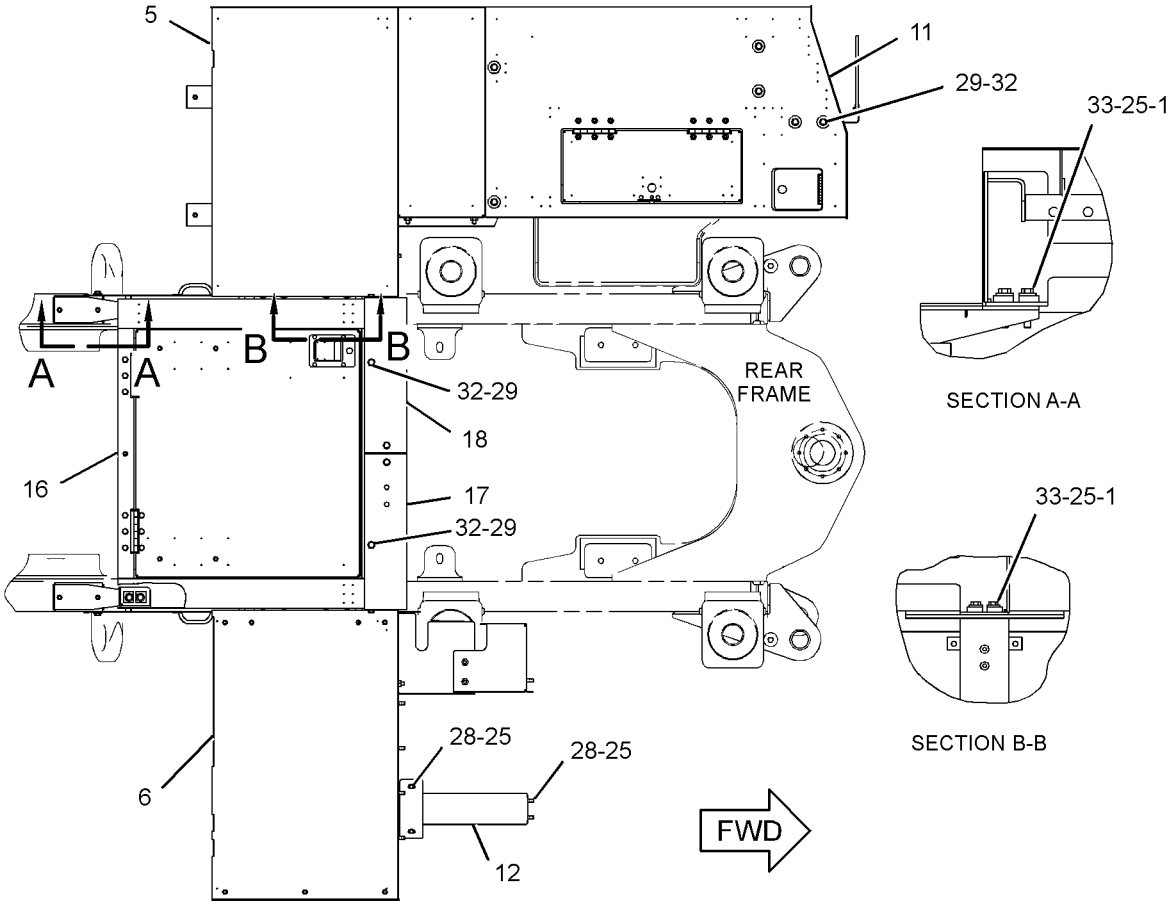

TOP VIEW

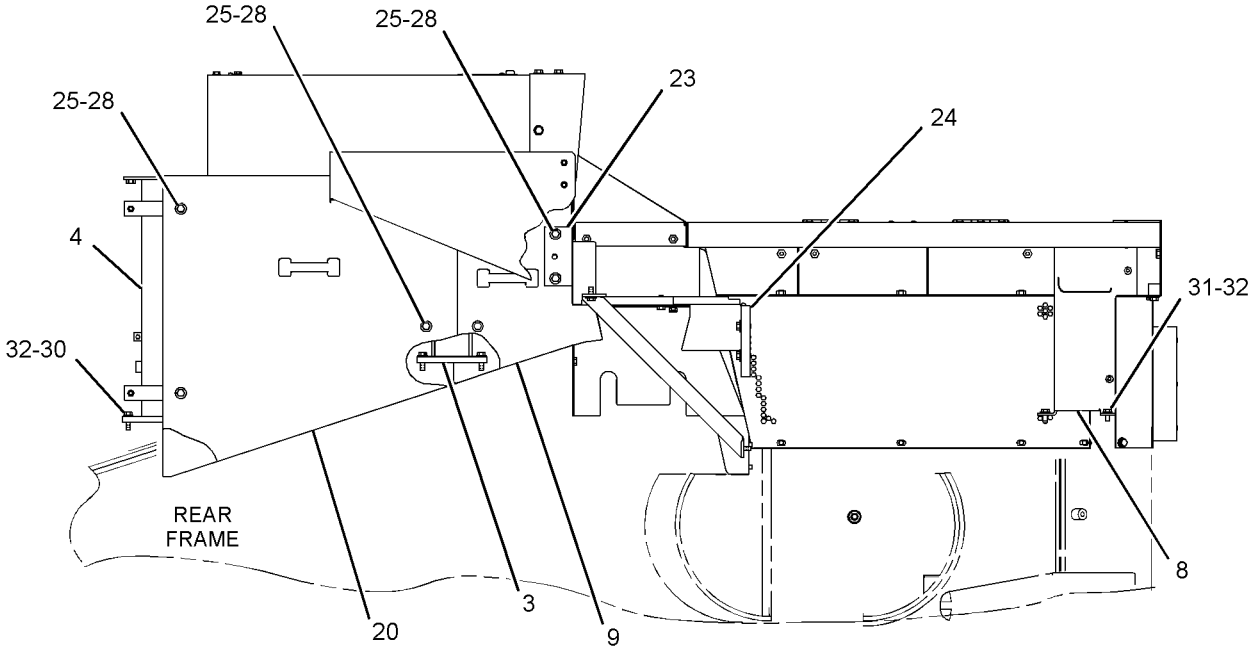

RIGHT SIDE VIEW

GRAPHIC #1 g01354223

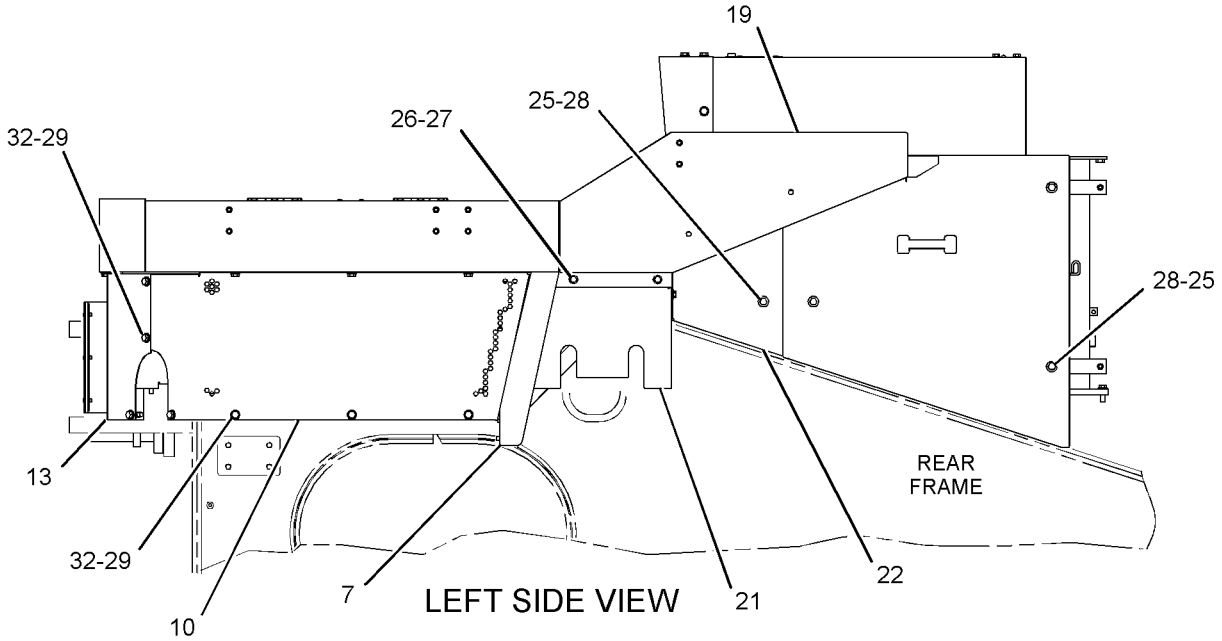

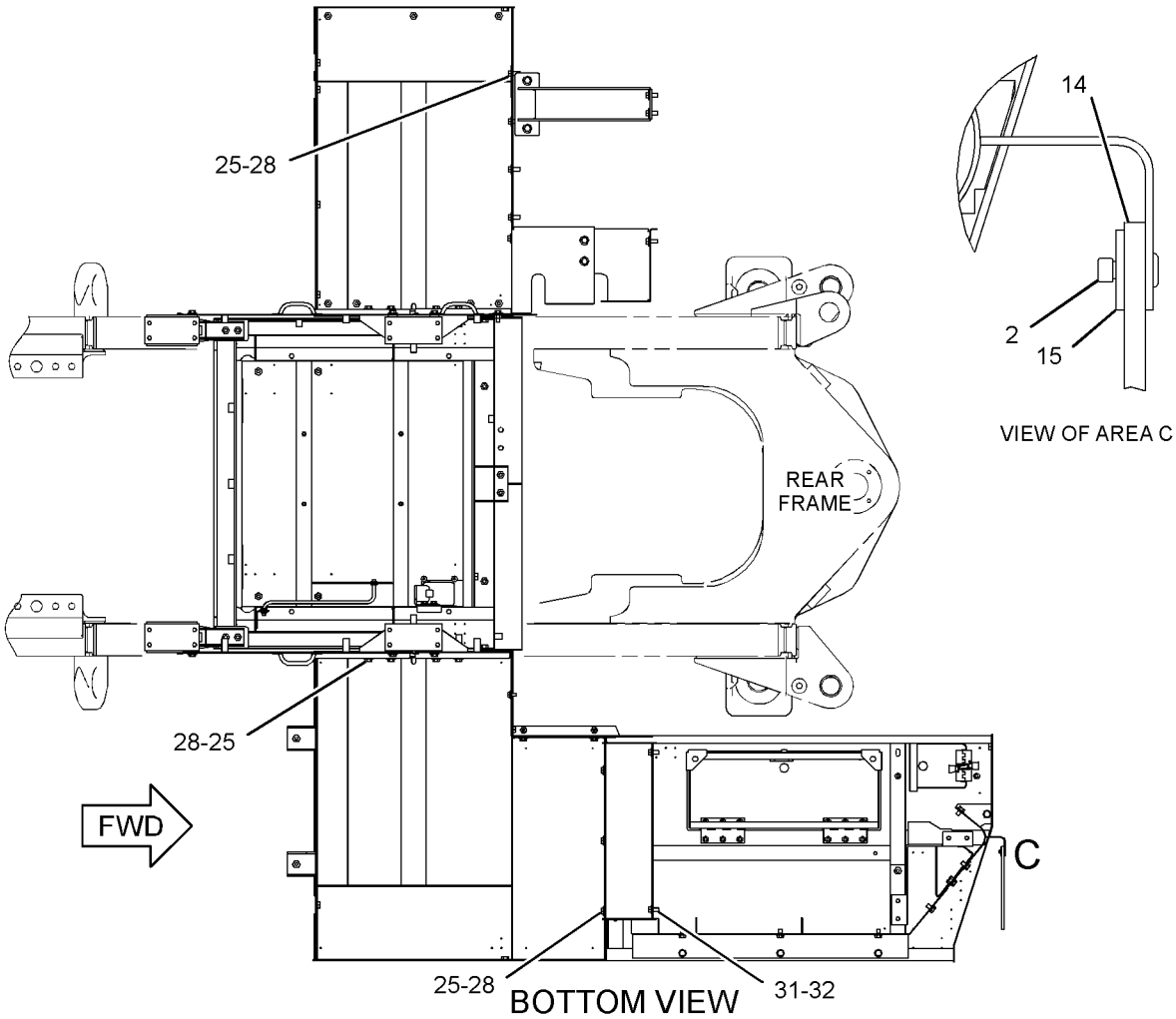

GRAPHIC #2 **<END>** g01354224

OPERATOR STATION

162-7599 PLATFORM GP-OPERATOR

S/N: BXY1-UP

PART OF 114-5124 PLATFORM GP-OPERATOR

SMCS-7253 **i01281354**

NOTE	REF NO	GRAPHIC REF	PART NUMBER	QTY	PART NAME 1 2 3 4 5 6 (PRODUCT LEVEL)	SEE PAGE
	1	1	**1K-8850**	1	SPRING	
	2	1	**9M-5884**	2	BUMPER	
	3	1	**119-1151**	2	HINGE AS	
	4	1	**134-6721**	1	PLATFORM AS	
		1	**3R-9322**	1	HINGE	
		1	**4K-8501**	2	CLIP	
M		1	**8T-3597**	11	NUT-WELD (M12X1.75-THD)	
M		1	**9R-2613**	2	BOSS-WELD (M10X1.5X25-MM)	
	5	1	**169-4374**	1	DOOR AS	
		1	**1V-6755**	1	LATCH AS	
		1	**6V-2370**	2	RIVET-POP	
M	6	1	**9X-2041**	12	SCREW-TRUSS HEAD (M10X1.5X20-MM)	

M-METRIC PART

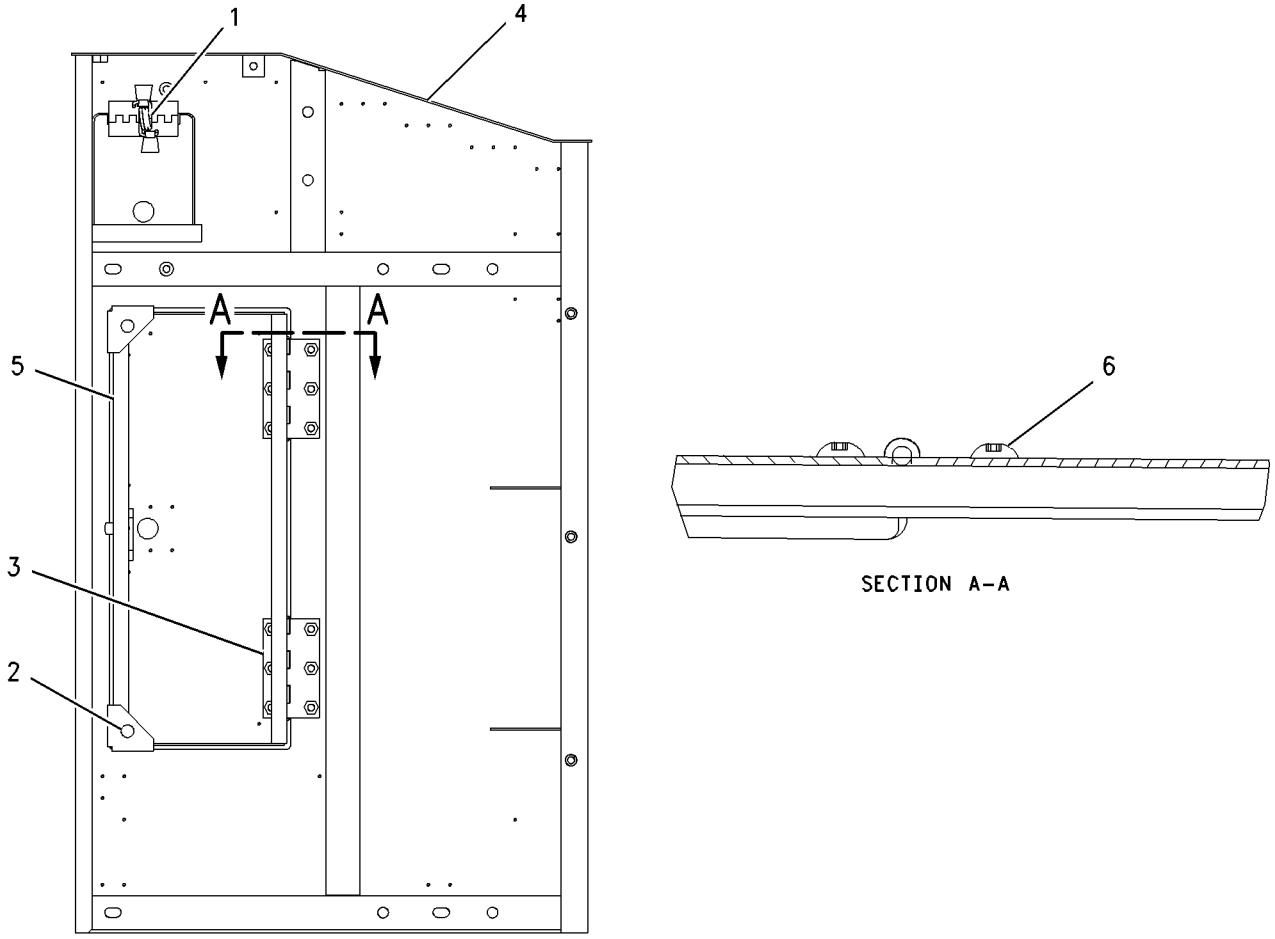

GRAPHIC #1 **<END>** g00679205

OPERATOR STATION

241-4936 RADIO GP—AM/FM/WB/CD PLAYER

S/N: BXY1-UP
PART OF 288-1744 RADIO GP
AN ATTACHMENT

SMCS-7338 **i03466483**

NOTE	REF NO	GRAPHIC REF	PART NUMBER	QTY	PART NAME 1 2 3 4 5 6 (PRODUCT LEVEL)	SEE PAGE
	1	1	**192-7054**	1	SLEEVE	

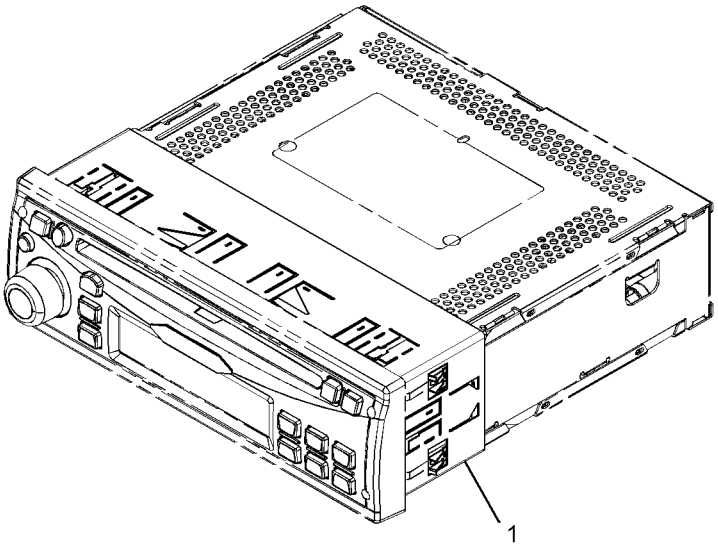

GRAPHIC #1 **<END>** g01813873

OPERATOR STATION

248-4152 RADIO GP—AM/FM/WB/CD PLAYER

S/N: BXY1-UP
PART OF 284-4739 RADIO GP
AN ATTACHMENT

SMCS-7338 **i03622641**

NOTE	REF NO	GRAPHIC REF	PART NUMBER	QTY	PART NAME 1 2 3 4 5 6 (PRODUCT LEVEL)	SEE PAGE
	1	1	**200-5728**	1	HARNESS AS-RADIO	
		1	**160-3518**	1	KIT-RECEPTACLE (8-PIN)	
					(INCLUDES RECEPTACLE AS & WEDGE)	
		1	**8T-8737**	1	PLUG-SEAL	
		1	**172-8037**	1	CONNECTOR (RADIO)	
		1	**172-8039**	11	TERMINAL (RADIO)	
		1	**186-3735**	7	PIN-CONNECTOR (16-GA TO 18-GA)	
	2	1	**241-4939**	1	BUSHING	
Y	3	1	**331-5291**	1	RADIO GP (AM/FM/WB/CD PLAYER)	1852

Y-SEPARATE ILLUSTRATION

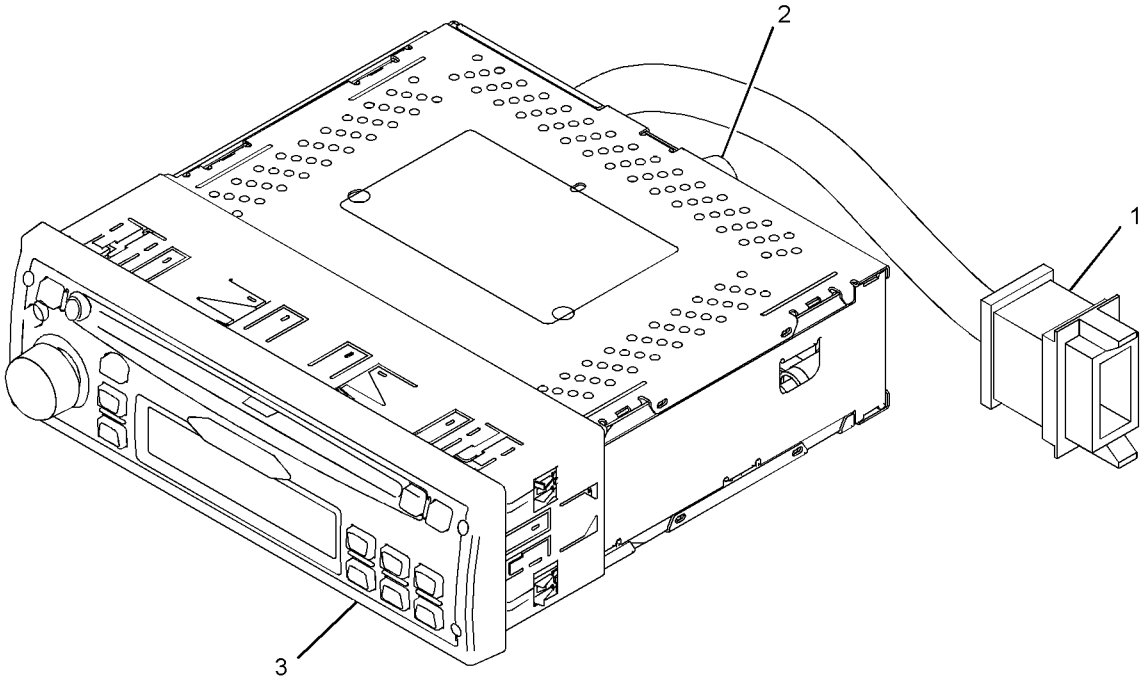

GRAPHIC #1 **<END>** g01948127

OPERATOR STATION

284-4739 RADIO GP—AM/FM/WB/CD PLAYER

S/N: BXY1-UP

AN ATTACHMENT

SMCS-7338 **i02515133**

NOTE	PART NUMBER	QTY	PART NAME 1 2 3 4 5 6 (PRODUCT LEVEL)	SEE PAGE
Y	*248-4152*	1	RADIO GP (AM/FM/WB/CD PLAYER)	1846

Y-SEPARATE ILLUSTRATION

<END>

OPERATOR STATION

284-8954 RADIO GP—AM/FM/WB/XM/ CD PLAYER

S/N: BXY1-UP

AN ATTACHMENT

SMCS-7338 i03466742

NOTE	REF NO	GRAPHIC REF	PART NUMBER	QTY	PART NAME 1 2 3 4 5 6 (PRODUCT LEVEL)	SEE PAGE
	1	1	192-7054	1	SLEEVE	

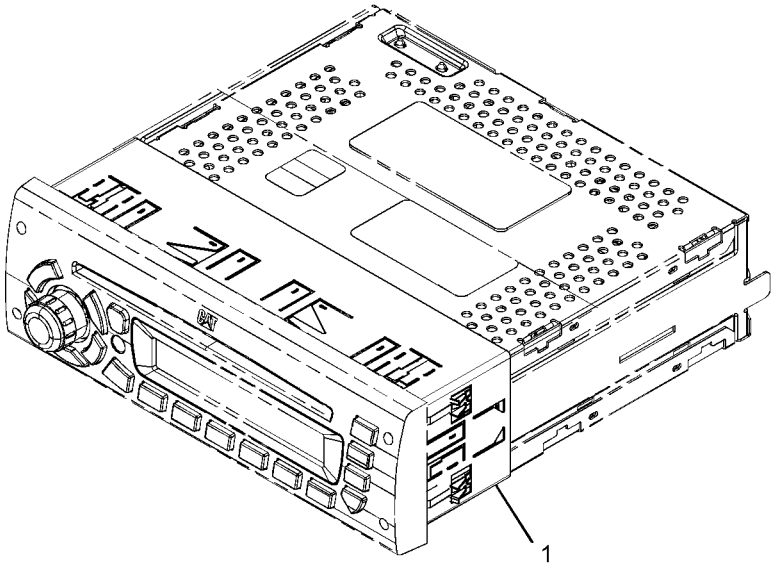

GRAPHIC #1 <END> g01813914

OPERATOR STATION

284-8955 RADIO GP—AM/FM/WB/SIRIUS/ CD PLAYER

S/N: BXY1-UP

AN ATTACHMENT

SMCS-7338 **i03466743**

NOTE	REF NO	GRAPHIC REF	PART NUMBER	QTY	PART NAME 1 2 3 4 5 6 (PRODUCT LEVEL)	SEE PAGE
	1	1	**192-7054**	1	SLEEVE	

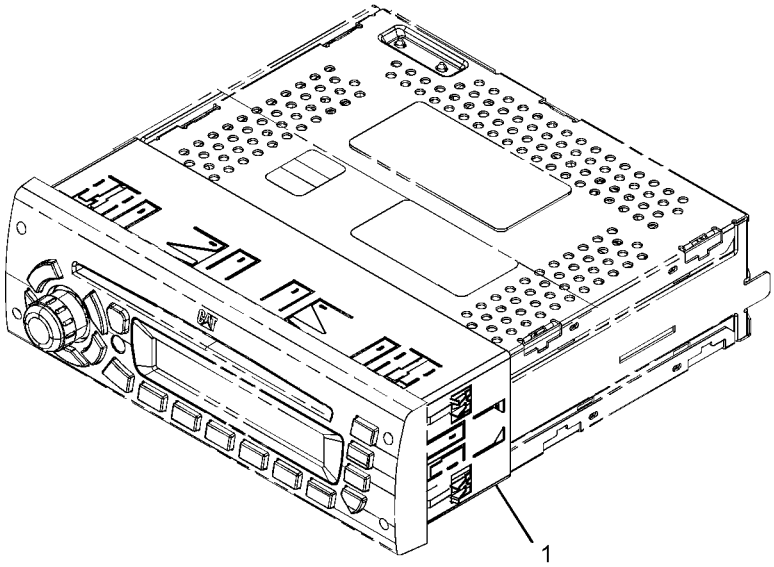

GRAPHIC #1 **<END>** g01813795

OPERATOR STATION

288-1744 RADIO GP—AM/FM/WB/CD PLAYER

S/N: BXY1-UP
AN ATTACHMENT
TYPE 1

SMCS-7338 **i03647955**

NOTE	REF NO	GRAPHIC REF	PART NUMBER	QTY	PART NAME 1 2 3 4 5 6 (PRODUCT LEVEL)	SEE PAGE
	1	1	**136-5490**	1	BUSHING (RADIO MOUNT)	
	2	1	**200-5728**	1	HARNESS AS-RADIO	
		1	**172-8037**	1	CONNECTOR (RADIO)	
		1	**186-3735**	7	PIN-CONNECTOR (16-GA TO 18-GA)	
		1	**8T-8737**	1	PLUG-SEAL	
		1	**160-3518**	1	KIT-RECEPTACLE (8-PIN)	
					(INCLUDES RECEPTACLE AS & WEDGE)	
		1	**172-8039**	11	TERMINAL (RADIO)	
Y	3	1	*241-4936*	1	RADIO GP (AM/FM/WB/CD PLAYER)	1845

Y-SEPARATE ILLUSTRATION

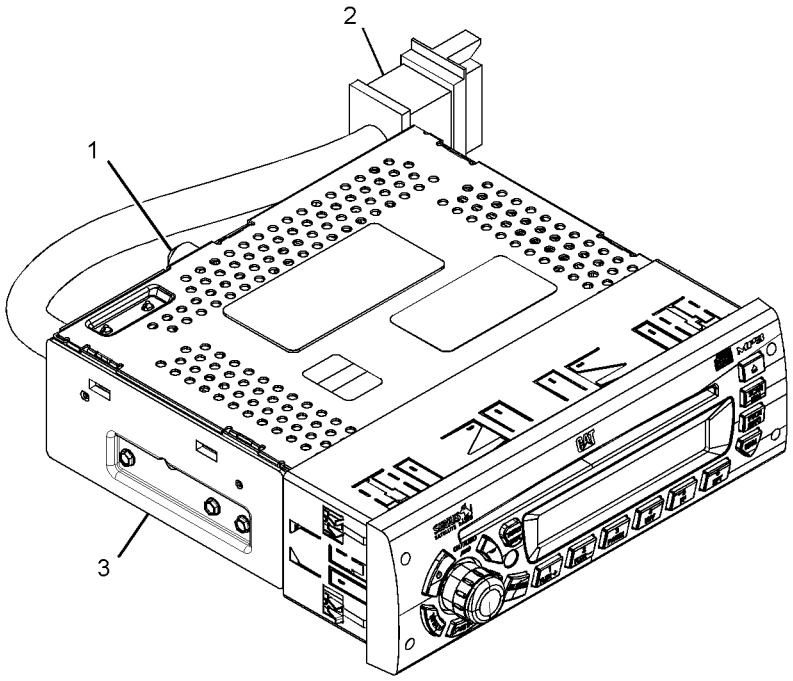

GRAPHIC #1 **<END>** g01958475

OPERATOR STATION

288-1744 RADIO GP—AM/FM/WB/CD PLAYER

S/N: BXY1-UP
AN ATTACHMENT
TYPE 2

SMCS-7338 **i03572364**

NOTE	REF NO	GRAPHIC REF	PART NUMBER	QTY	PART NAME 1 2 3 4 5 6 (PRODUCT LEVEL)	SEE PAGE
	1	1	**136-5490**	1	BUSHING (RADIO MOUNT)	
	2	1	**200-5728**	1	HARNESS AS-RADIO	
		1	**172-8037**	1	CONNECTOR (RADIO)	
		1	**186-3735**	7	PIN-CONNECTOR (16-GA TO 18-GA)	
		1	**8T-8737**	1	PLUG-SEAL	
		1	**160-3518**	1	KIT-RECEPTACLE (8-PIN)	
					(INCLUDES RECEPTACLE AS & WEDGE)	
CY	3	1	**331-5291**	1	RADIO GP (AM/FM/WB/CD PLAYER)	1852

C-CHANGE FROM PREVIOUS TYPE
Y-SEPARATE ILLUSTRATION

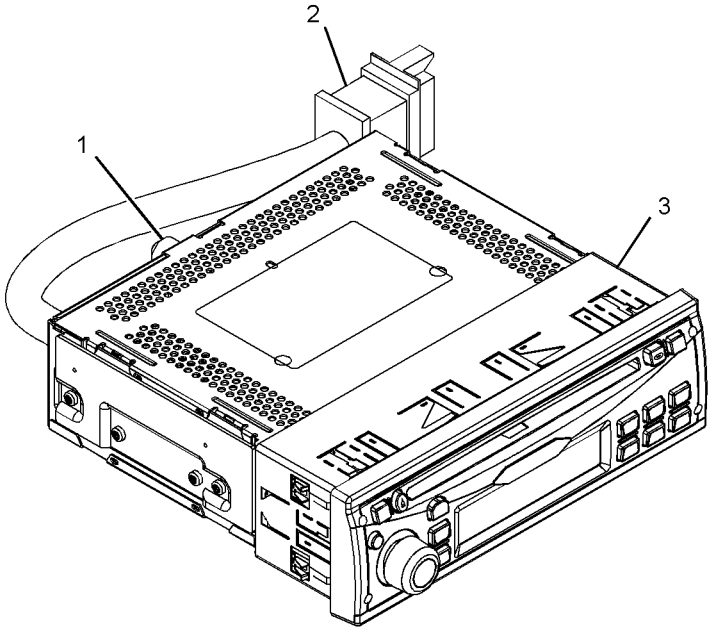

GRAPHIC #1 **<END>** g01812994

OPERATOR STATION

331-5291 RADIO GP—AM/FM/WB/CD PLAYER

S/N: BXY1-UP
PART OF 248-4152, 288-1744 RADIO GP
FOR USE WITH INSTALLATION GP-RADIO
AN ATTACHMENT

SMCS-7338 **i03466569**

NOTE	REF NO	GRAPHIC REF	PART NUMBER	QTY	PART NAME 1 2 3 4 5 6 (PRODUCT LEVEL)	SEE PAGE
	1	1	**192-7054**	1	SLEEVE	

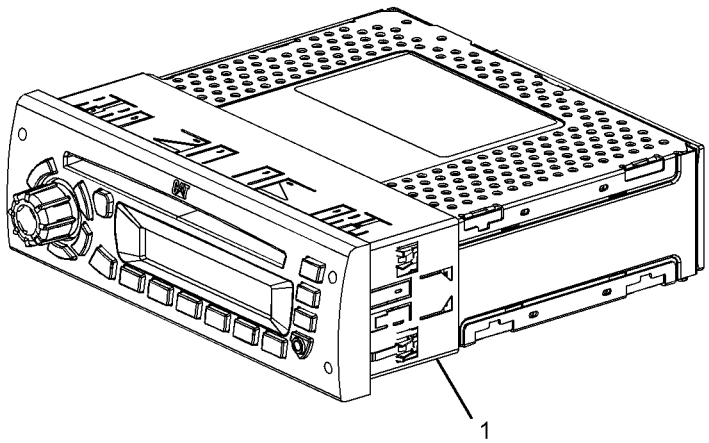

GRAPHIC #1 **<END>** g01813033

OPERATOR STATION

263-9088 RADIO GP-COMMUNICATION—PRODUCT LINK 121SR

S/N: BXY1-UP

PART OF 270-9046 CONTROL & MTG GP-COMMUNICATION

AN ATTACHMENT

SMCS-733T i03729421

NOTE	PART NUMBER	QTY	PART NAME 1 2 3 4 5 6 (PRODUCT LEVEL)	SEE PAGE
	336-3566	1	SOFTWARE GP-COMMUNICATION (PRODUCT LINK 121SR)	

<END>

OPERATOR STATION

210-2270 RECLINER GP-SEAT

S/N: BXY1-UP
PART OF 178-0603, 285-8423 SEAT GP
ALSO AN ATTACHMENT

SMCS-7312 **i02709288**

NOTE	REF NO	GRAPHIC REF	PART NUMBER	QTY	PART NAME 1 2 3 4 5 6 (PRODUCT LEVEL)	SEE PAGE
	1	1	**177-1862**	1	BRACKET (SEAT BELT)	
	2	1	**210-2262**	1	BRACKET AS	
	3	1	**210-2263**	1	BRACKET AS	
	4	1	**210-2266**	1	GEAR-LOCK (14-TEETH)	
	5	1	**293-2911**	1	SHAFT AS	
		1	**2L-5893**	2	PIN-SPRING	
		1	**170-8590**	1	SPRING	
	6	1	**217-7933**	1	LATCH	
	7	1	**236-5197**	1	SPRING	
	8	1	**031-0214**	1	BOLT-LOCKING (1/4-20X0.5-IN)	
	9	1	**101-2867**	1	WASHER-HARD (7.2X25X2-MM THK)	
	10	1	**4M-6425**	1	BOLT (5/16-18X1-IN)	
	11	1	**5M-2894**	1	WASHER-HARD (10.2X18.5X2.5-MM THK)	
	12	1	**5S-7383**	1	BOLT (3/8-16X1.75-IN)	
	13	1	**8T-4224**	1	WASHER-HARD (8.8X16X2-MM THK)	

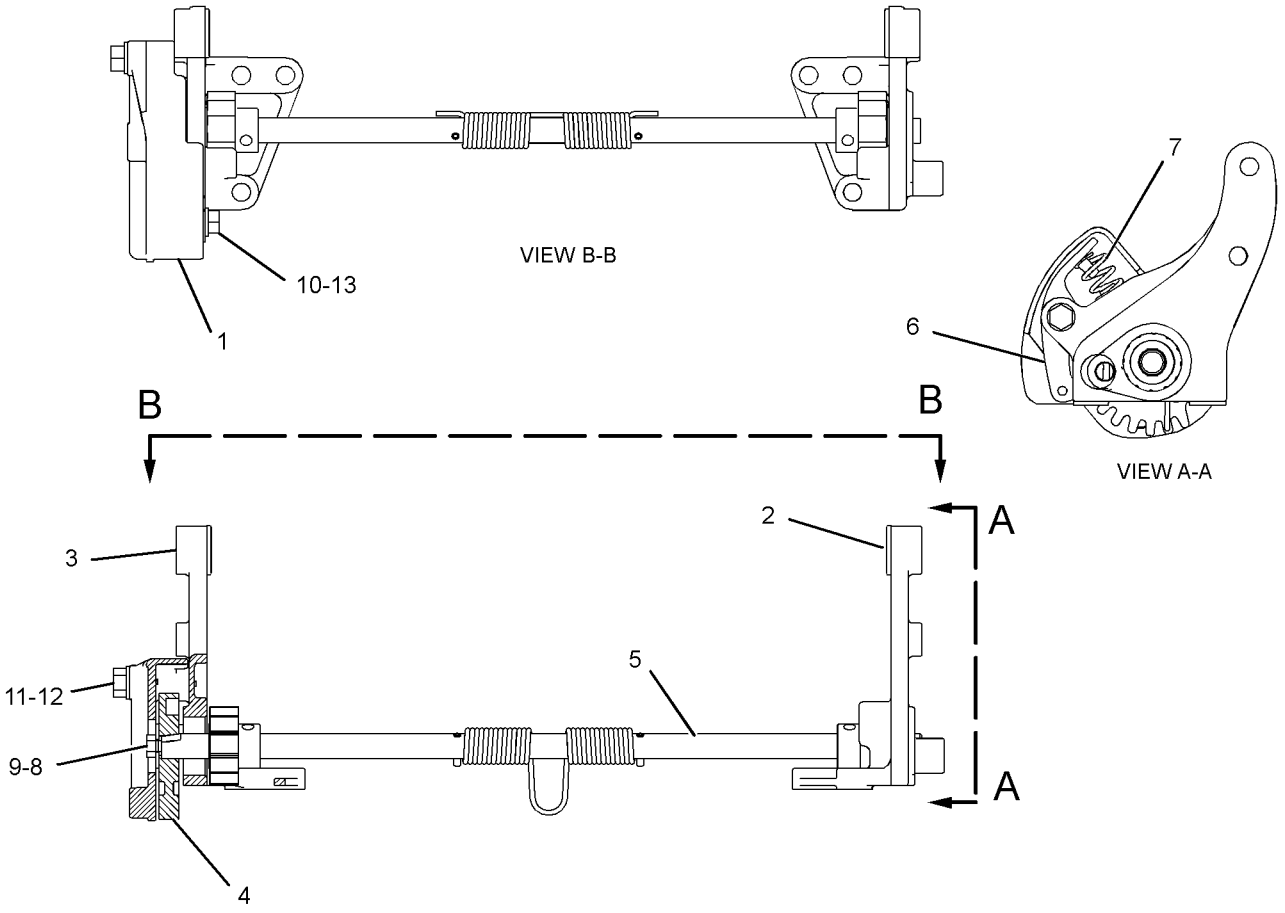

GRAPHIC #1 **<END>** g01296294

OPERATOR STATION

2Q-8737 ROOF GP-CAB

S/N: BXY1900-UP

CANNOT BE USED WITH 2Q-8733 STEEL MILL AR, 2Q-8722 STEEL MILL AR AN ATTACHMENT

SMCS-7301 **i03083254**

NOTE	REF NO	GRAPHIC REF	PART NUMBER	QTY	PART NAME 1 2 3 4 5 6 (PRODUCT LEVEL)	SEE PAGE
Y	1	1	*310-8266*	1	ROOF GP-CAB	1858

Y-SEPARATE ILLUSTRATION

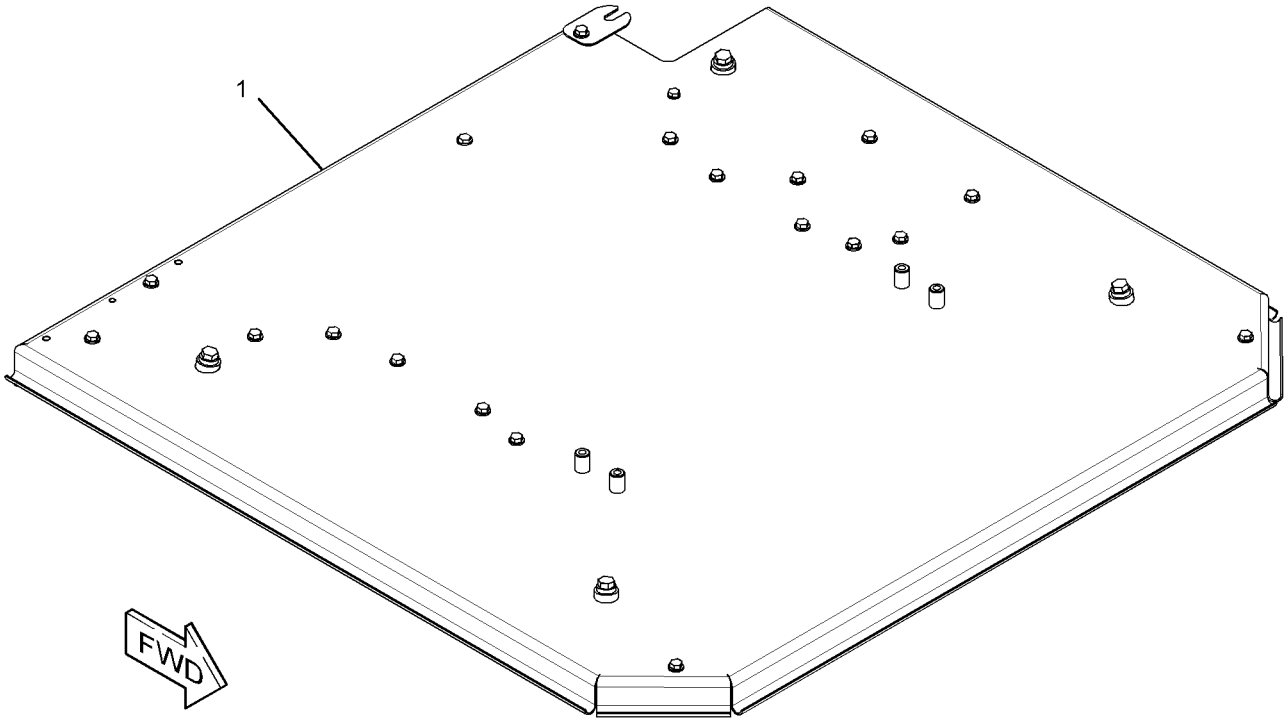

GRAPHIC #1 **<END>** g01568675

OPERATOR STATION

194-3715 ROOF GP-CAB

S/N: BXY1-UP
CANNOT BE USED WITH 194-3766—PAGE 1857
AN ATTACHMENT

SMCS-7301 **i01497998**

NOTE	REF NO	GRAPHIC REF	PART NUMBER	QTY	PART NAME 1 2 3 4 5 6 (PRODUCT LEVEL)	SEE PAGE
	1	1	**197-5470**	4	GROMMET	
	2	1	**196-0436**	4	SPACER (25X40X12-MM THK)	
	3	1	**107-3157**	8	WASHER (22X76.2X6-MM THK)	
	4	1	**173-2118**	1	ROOF	
	5	1	**174-2407**	1	INSULATION	
	6	1	**8T-4122**	4	WASHER-HARD (17X32X3.5-MM THK)	
M	7	1	**8T-4193**	4	BOLT (M16X2X50-MM)	
	8	1	**197-4859**	1	FILM-IDENTIFICATION (CATERPILLAR, REAR CAB)	
	9	1	**136-2186**	1	FILM-WINDOW (REAR)	

M-METRIC PART

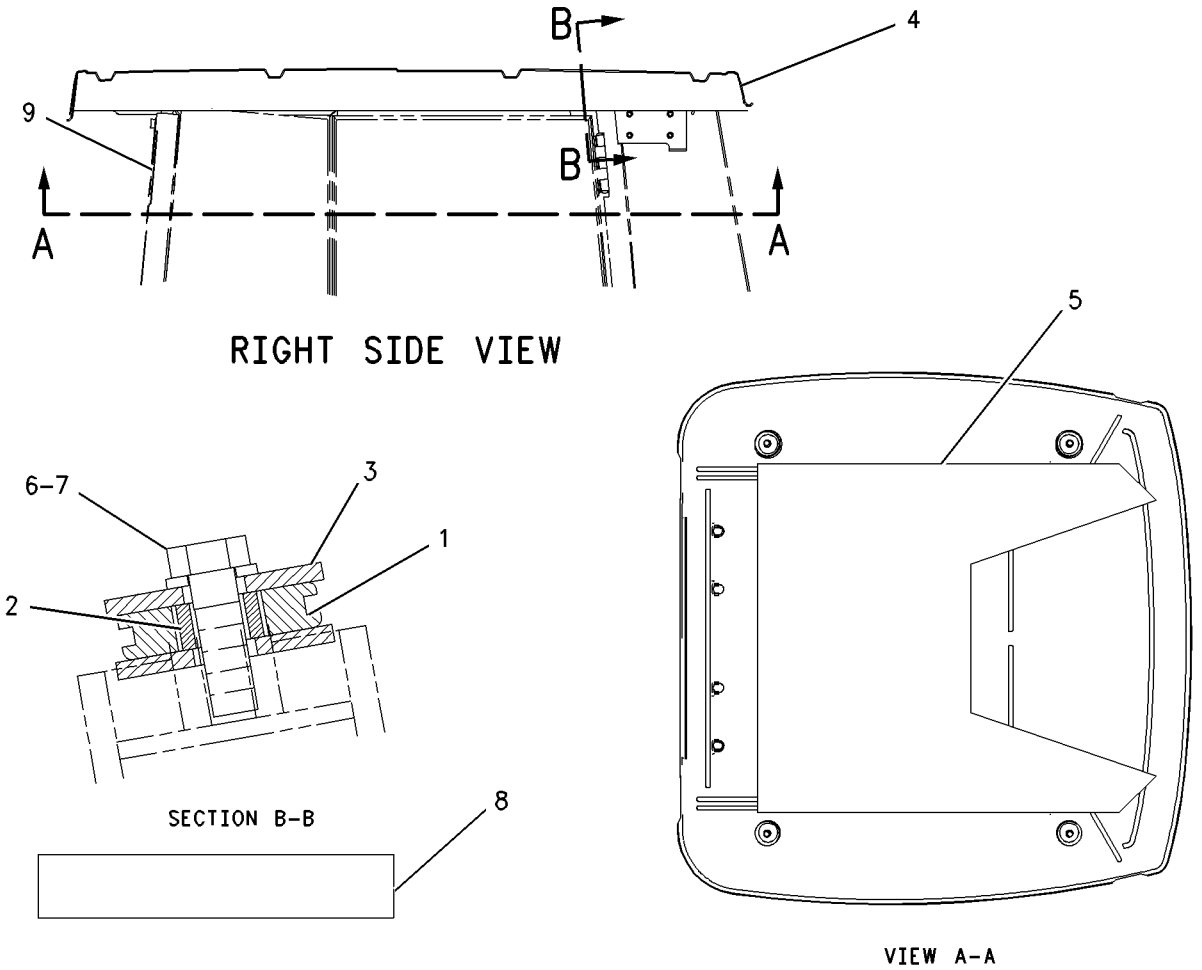

GRAPHIC #1 **<END>** g00778054

OPERATOR STATION

194-3766 ROOF GP-CAB

S/N: BXY1-UP

CANNOT BE USED WITH 194-3715 ROOF GP-CAB

AN ATTACHMENT

SMCS-7301 **i01475918**

NOTE	REF NO	GRAPHIC REF	PART NUMBER	QTY	PART NAME 1 2 3 4 5 6 (PRODUCT LEVEL)	SEE PAGE
	1	1	**6D-5729**	4	GROMMET	
	2	1	**6P-8875**	4	SPACER (19X28.5X16-MM THK)	
	3	1	**107-3157**	8	WASHER (22X76.2X6-MM THK)	
	4	1	**174-2407**	1	INSULATION	
	5	1	**174-2408**	1	INSULATION	
	6	1	**199-5510**	1	ROOF	
	7	1	**8T-4122**	4	WASHER-HARD (17X32X3.5-MM THK)	
M	8	1	**8T-4193**	4	BOLT (M16X2X50-MM)	

M-METRIC PART

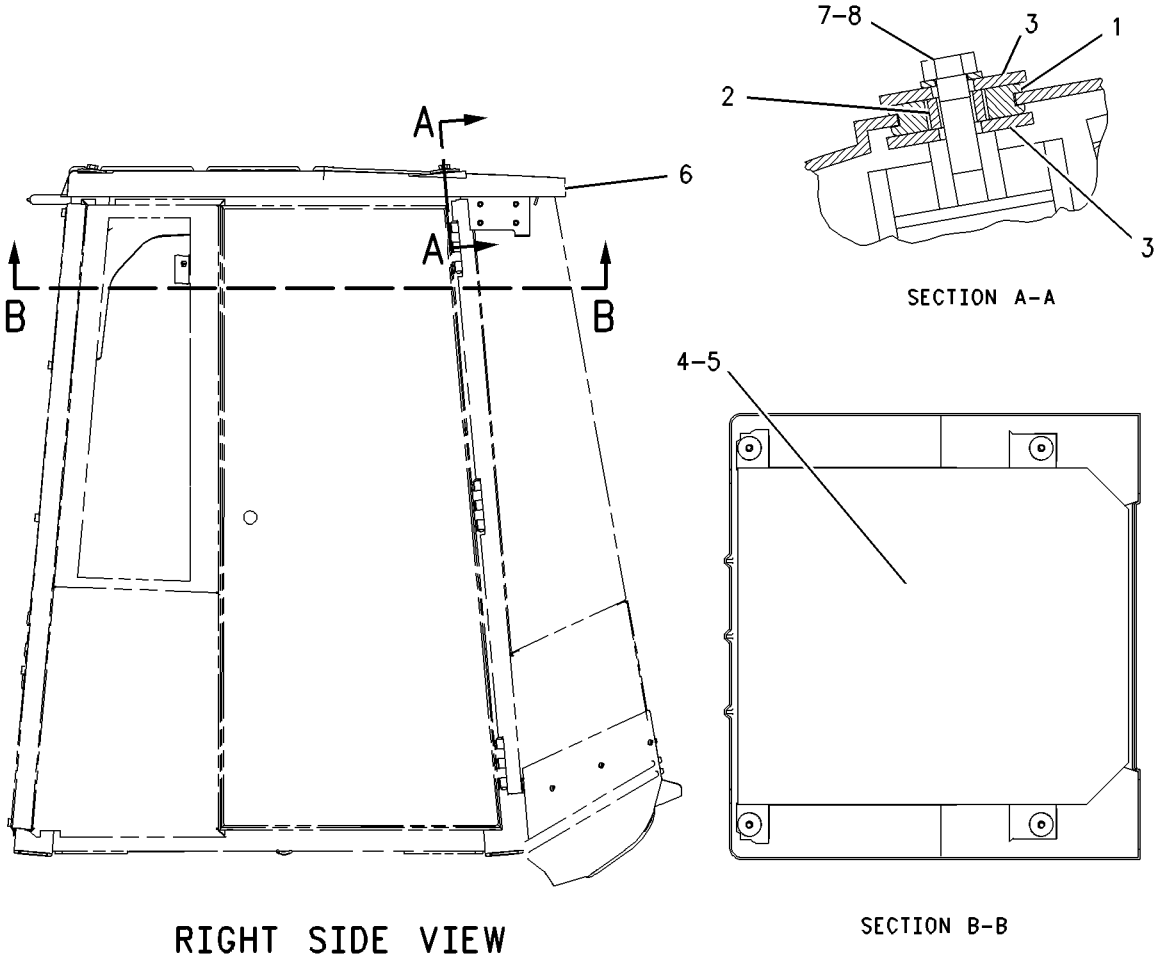

GRAPHIC #1 **<END>** g00743522

OPERATOR STATION

310-8266 ROOF GP-CAB

S/N: BXY1900-UP
PART OF 308-2727 CAB AR, 2Q-8737 ROOF GP-CAB
AN ATTACHMENT

SMCS-7301 **i03623748**

NOTE	REF NO	GRAPHIC REF	PART NUMBER	QTY	PART NAME 1 2 3 4 5 6 (PRODUCT LEVEL)	SEE PAGE
	1	1	**174-2407**	1	INSULATION	
	2	1	**174-2408**	1	INSULATION	
	3	1	**197-4859**	1	FILM-IDENTIFICATION (CATERPILLAR, REAR CAB)	
	4	1	**310-7218**	1	ROOF AS	
M		1	**8T-3597**	18	NUT-WELD (M12X1.75-THD)	
		1	**9R-7123**	4	SPACER (20X40X50-MM THK)	
M		1	**087-6059**	4	BOSS (M12X1.75X34-MM)	
M		1	**8T-3490**	1	NUT-WELD (M10X1.5-THD)	
	5	1	**317-5833**	1	PLATE	
	6	1	**198-4780**	4	WASHER-HARD (17.5X32X8-MM THK)	
	7	1	**8T-4121**	1	WASHER-HARD (11X21X2.5-MM THK)	
M	8	1	**8T-4137**	1	BOLT (M10X1.5X20-MM)	
M	9	1	**8T-4175**	4	BOLT (M16X2X90-MM)	
M	10	1	**8T-4179**	18	BOLT (M12X1.75X20-MM)	
	11	1	**8T-4223**	18	WASHER-HARD (13.5X25.5X3-MM THK)	

M-METRIC PART

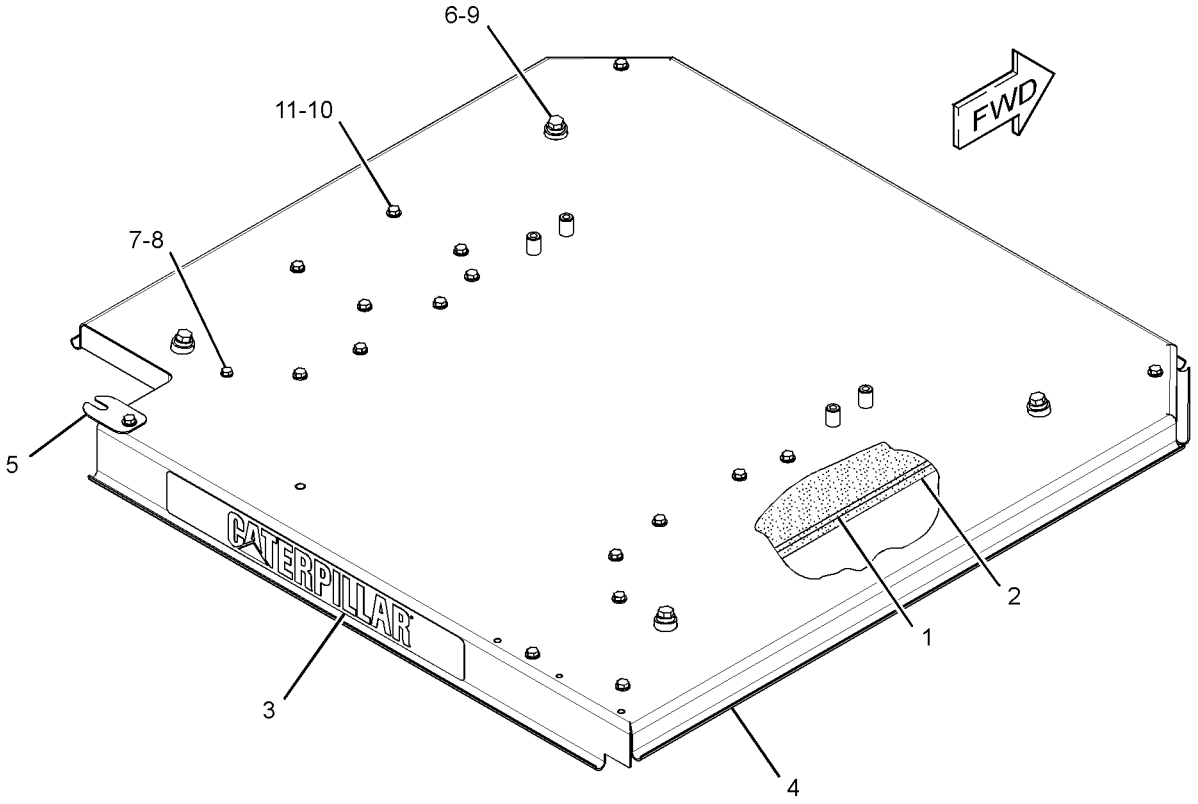

GRAPHIC #1 **<END>** g02053202

OPERATOR STATION

326-3073 ROOF GP-CAB

S/N: BXY1900-UP

PART OF 292-6110, 346-3826 CAB AR

SMCS-7301 **i03765178**

NOTE	REF NO	GRAPHIC REF	PART NUMBER	QTY	PART NAME 1 2 3 4 5 6 (PRODUCT LEVEL)	SEE PAGE
	1	1	**107-3157**	8	WASHER (22X76.2X6-MM THK)	
	2	1	**173-2118**	1	ROOF	
	5	1	**196-0436**	4	SPACER (25X40X12-MM THK)	
	6	1	**197-4859**	1	FILM-IDENTIFICATION (CATERPILLAR, REAR CAB)	
	7	1	**197-5470**	4	GROMMET	
	8	1	**8T-4122**	4	WASHER-HARD (17X32X3.5-MM THK)	
M	9	1	**8T-4193**	4	BOLT (M16X2X50-MM)	

M-METRIC PART

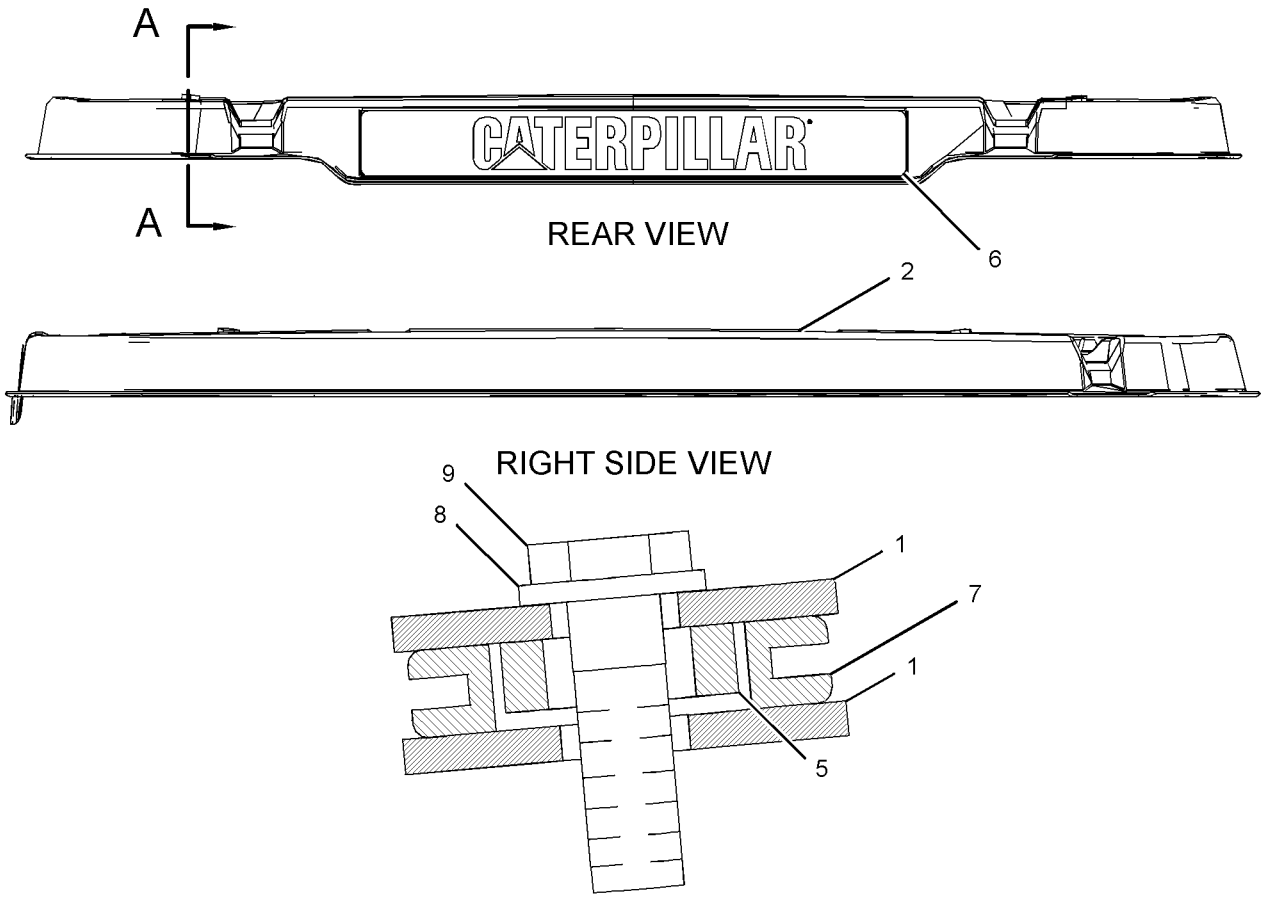

GRAPHIC #1 **<END>** g02061493

OPERATOR STATION

228-9530 ROPS GP-ENCLOSED

S/N: BXY1-1899

PART OF 227-3190 CAB AR

SMCS-7301 **i02364842**

NOTE	REF NO	GRAPHIC REF	PART NUMBER	QTY	PART NAME 1 2 3 4 5 6 (PRODUCT LEVEL)	SEE PAGE
	1	2	**7T-0920**	1	BLOCK	
	2	2	**8T-6842**	1	FILM-INSTRUCTION (PULL RING, ALTERNATE EXIT)	
	3	1	**107-4600**	1	GLASS (RIGHT SIDE, REAR)	
	4	1	**107-4601**	1	GLASS (REAR)	
	5	1	**107-4602**	1	GLASS (LEFT SIDE, REAR)	
	6	1	**107-4603**	1	GLASS (FRONT)	
	7	2	**107-7306**	1	SHEET AS	
	8	2	**111-0687**	1	STRIKER AS	
	9	1	**121-3274**	1	GLASS (RIGHT SIDE, FRONT)	
	10	1	**121-3275**	1	GLASS (LEFT SIDE, FRONT)	
	11	1	**121-3277**	1	SHEET AS (LEFT SIDE, FRONT)	
	12	1	**121-3278**	1	SHEET AS (RIGHT SIDE, FRONT)	
	13	2	**126-1052**	1	PIN	
	14	2	**128-1026**	1	SHIELD-STRIKER	
	15	2	**129-2570**	1	CHANNEL AS	
		2	**5D-9629**	2	ROD	
	16	2	**129-2572**	1	CHANNEL	
	17	1	**129-2581**	1	DOOR AS	
		1	**1V-6755**	1	LATCH AS	
		1	**111-1316**	1	HINGE	
	18	2	**136-1725**	1	TRIM (RH)	
	19	2	**136-1726**	1	TRIM (LH)	
	20	2	**136-1728**	1	TRIM	
	21	2	**136-1729**	1	TRIM	
	22	2	**136-1730**	1	TRIM	
	23	2	**136-1731**	1	BRACKET AS	
M		2	**6V-9632**	1	NUT-WELD (M6X1-THD)	
	24	1	**136-1732**	1	SHEET AS	
M		1	**6V-9632**	3	NUT-WELD (M6X1-THD)	
	25	2	**136-1734**	1	INSULATION	
	26	1	**136-9353**	1	TRIM	
	27	2	**137-7321**	1	TRIM	
	28	2	**160-5003**	1	BRACKET AS	
		2	**7T-1099**	1	LINK	
M		2	**8T-3490**	4	NUT-WELD (M10X1.5-THD)	
M		2	**8T-3635**	1	STUD-WELD (M12X1.75X34.93-MM OAL)	
Y	29	1	**165-5576**	1	DOOR GP-CAB (LH)	1740
Y	30	1	**165-5725**	1	DOOR GP-CAB (RH)	1742
Y	31	1	**172-4387**	1	PLATFORM GP-CAB	1836
	32	2	**209-5018**	1	LATCH AS	
	33	1	**228-9535**	1	CAB AS	
	34	1,2	**8T-4121**	28	WASHER-HARD (11X21X2.5-MM THK)	
M	35	2	**8T-4133**	4	NUT (M10X1.5-THD)	
M	36	2	**8T-4136**	4	BOLT (M10X1.5X25-MM)	
M	37	1,2	**8T-4137**	20	BOLT (M10X1.5X20-MM)	
M	38	1	**9X-2042**	2	SCREW-TRUSS HEAD (M6X1X12-MM)	
M	39	2	**9X-2044**	2	SCREW-TRUSS HEAD (M6X1X16-MM)	
M	40	1	**9X-2041**	2	SCREW-TRUSS HEAD (M10X1.5X20-MM)	
	41	2	**270-2481**	1	BRACKET AS	
M		2	**6V-9632**	4	NUT-WELD (M6X1-THD)	
	42	1	**240-9499**	1	TRIM AS (RH)	
		1	**136-9353**	1	TRIM	

M-METRIC PART
Y-SEPARATE ILLUSTRATION

228-9530 ROPS GP-ENCLOSED *(contd.)* **i02364842**

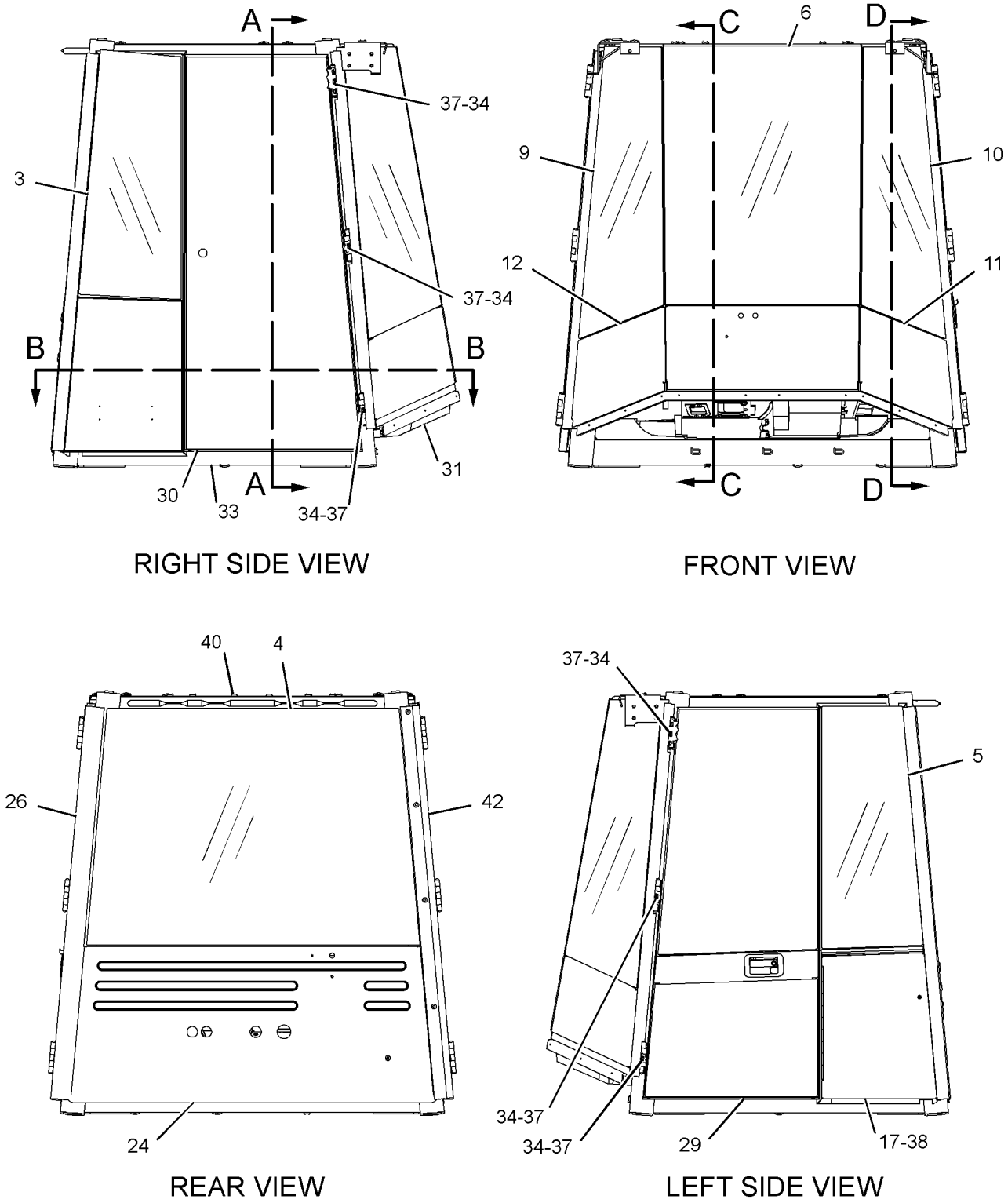

REFER TO ALL ILLUSTRATIONS OF
THIS GROUP FOR AUXILIARY VIEWS

GRAPHIC #1

g01184832

228-9530 ROPS GP-ENCLOSED *(contd.)* i02364842

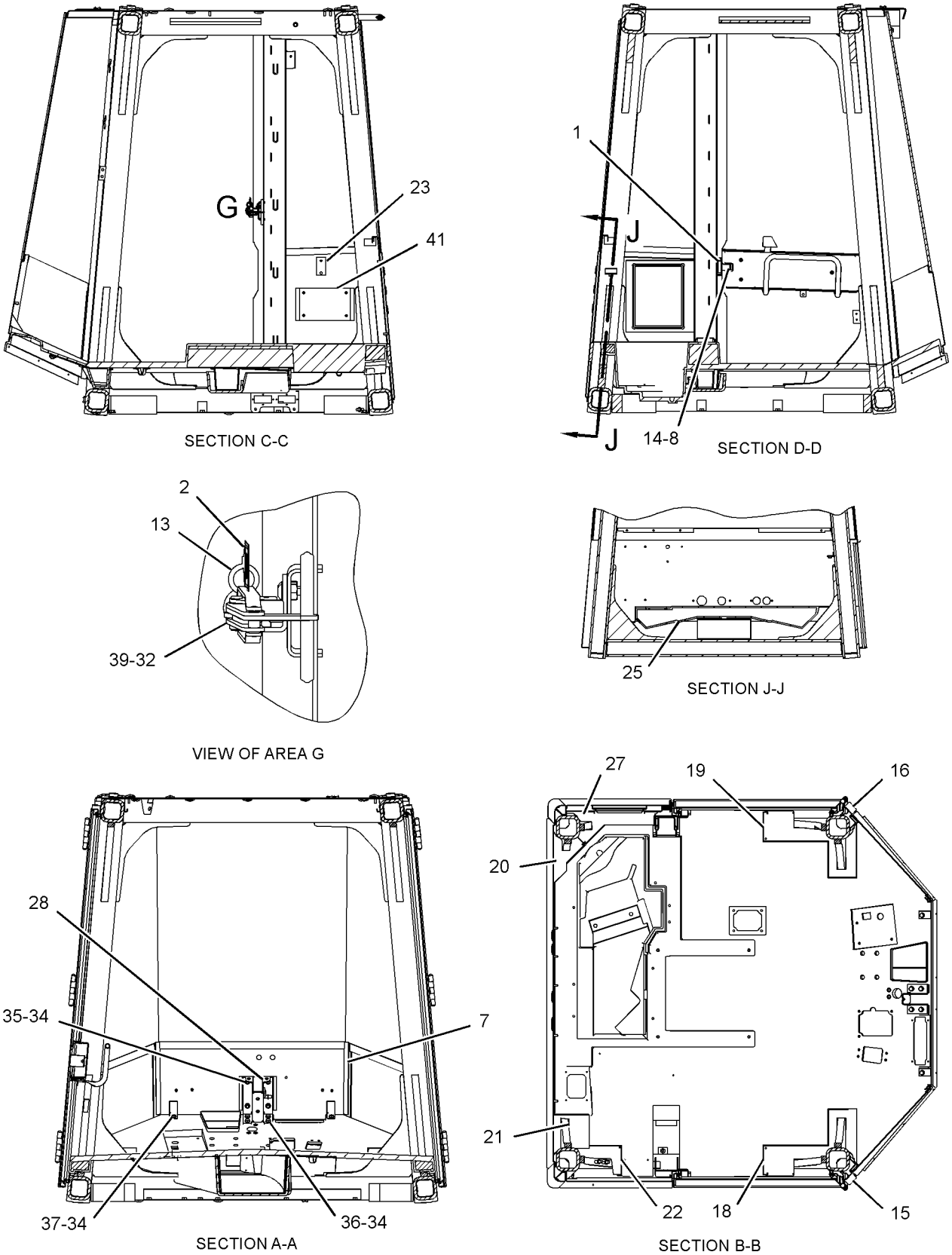

GRAPHIC #2 **<END>** g01184840

OPERATOR STATION

292-6893 ROPS GP-ENCLOSED

S/N: BXY1900-UP

PART OF 292-6110, 346-3826 CAB AR

SMCS-7301 **i02939617**

NOTE	REF NO	GRAPHIC REF	PART NUMBER	QTY	PART NAME 1 2 3 4 5 6 (PRODUCT LEVEL)	SEE PAGE
	1	1	**107-4600**	1	GLASS (RIGHT SIDE, REAR)	
	2	2	**107-4601**	1	GLASS (REAR)	
	3	2	**107-4602**	1	GLASS (LEFT SIDE, REAR)	
	4	1	**107-4603**	1	GLASS (FRONT)	
	5	1	**107-7306**	1	SHEET AS	
	6	1,2	**111-0687**	2	STRIKER AS	
	7	1	**121-3274**	1	GLASS (RIGHT SIDE, FRONT)	
	8	1	**121-3275**	1	GLASS (LEFT SIDE, FRONT)	
	9	1	**121-3277**	1	SHEET AS (LEFT SIDE, FRONT)	
	10	1	**121-3278**	1	SHEET AS (RIGHT SIDE, FRONT)	
	11	1,2	**128-1026**	2	SHIELD-STRIKER	
	12	1	**129-2570**	1	CHANNEL AS	
		1	**5D-9629**	2	ROD	
	13	2	**129-2572**	1	CHANNEL	
	14	2	**129-2581**	1	DOOR AS	
		2	**1V-6755**	1	LATCH AS	
		2	**111-1316**	1	HINGE	
	15	1	**136-1725**	1	TRIM (RH)	
	16	2	**136-1726**	1	TRIM (LH)	
	17	2	**136-1728**	1	TRIM	
	18	2	**136-1729**	1	TRIM	
	19	2	**136-1730**	1	TRIM	
	20	2	**136-1731**	1	BRACKET AS	
	21	2	**136-1732**	1	SHEET AS	
M		2	**9R-2821**	1	BOSS (M10X1.5X15-MM)	
	22	2	**136-1734**	1	INSULATION	
	23	2	**136-9353**	1	TRIM	
	24	2	**137-7321**	1	TRIM	
	25	1	**160-5003**	1	BRACKET AS	
Y	26	2	**179-3737**	1	DOOR GP-CAB (LH)	1743
Y	27	2	**172-4387**	1	PLATFORM GP-CAB	1836
Y	28	1	**179-3738**	1	DOOR GP-CAB (RH)	1745
	29	1	**240-9499**	1	TRIM AS (RH)	
	30	2	**270-2481**	1	BRACKET AS	
M		2	**6V-9632**	4	NUT-WELD (M6X1-THD)	
	31	1	**301-4549**		CAB AS-ENCLOSED ROPS	
	32	1,2	**7T-0920**	2	BLOCK	
	33	1,2	**8T-4121**	28	WASHER-HARD (11X21X2.5-MM THK)	
M	34	1	**8T-4133**	4	NUT (M10X1.5-THD)	
M	35	1	**8T-4136**	4	BOLT (M10X1.5X25-MM)	
M	36	1,2	**8T-4137**	20	BOLT (M10X1.5X20-MM)	
M	37	1	**9X-2044**	1	SCREW-TRUSS HEAD (M6X1X16-MM)	
M	38	2	**9X-2042**	2	SCREW-TRUSS HEAD (M6X1X12-MM)	

M-METRIC PART
Y-SEPARATE ILLUSTRATION

292-6893 **ROPS GP-ENCLOSED** *(contd.)* **i02939617**

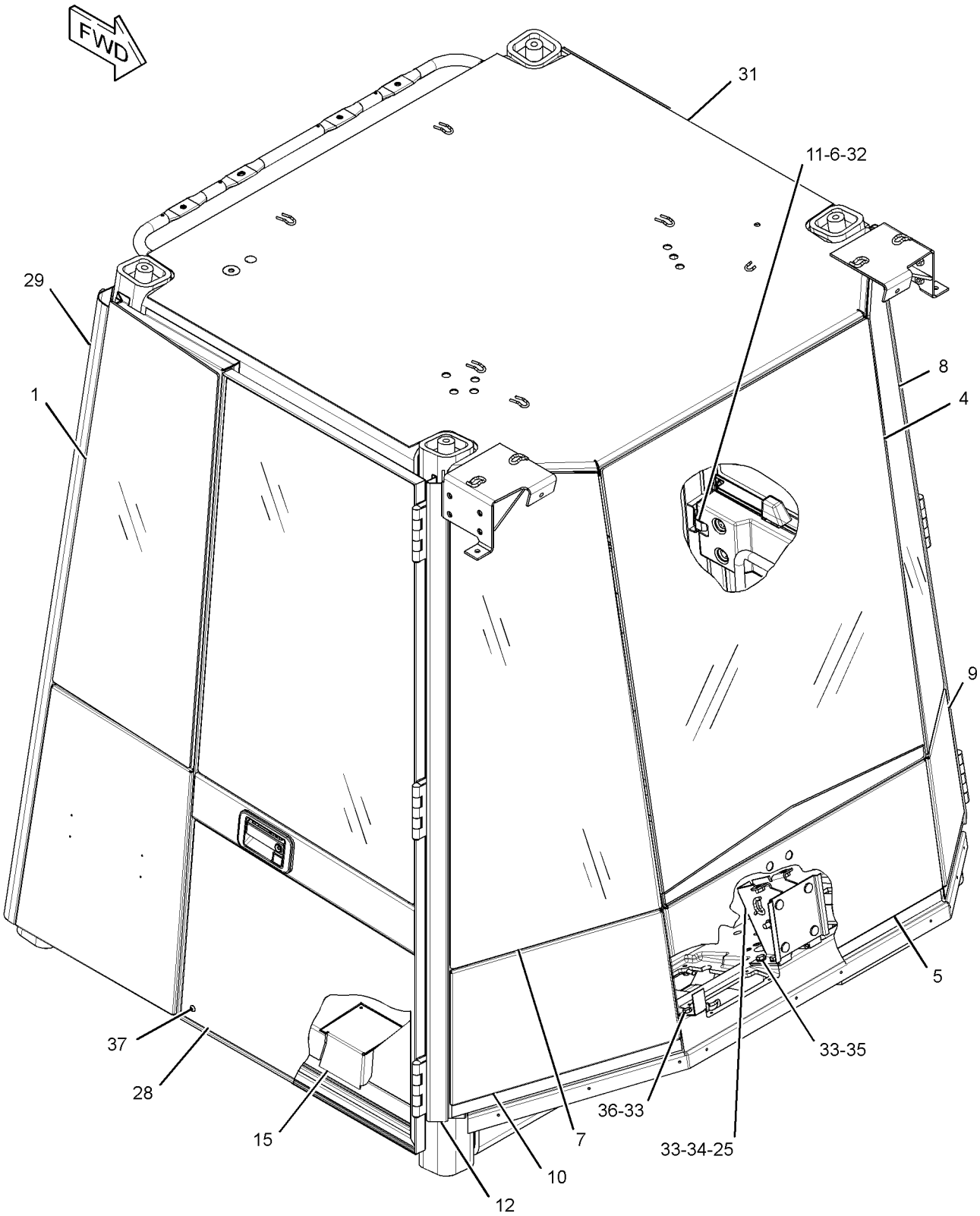

GRAPHIC #1 g01686314

292-6893 **ROPS GP-ENCLOSED** *(contd.)* **i02939617**

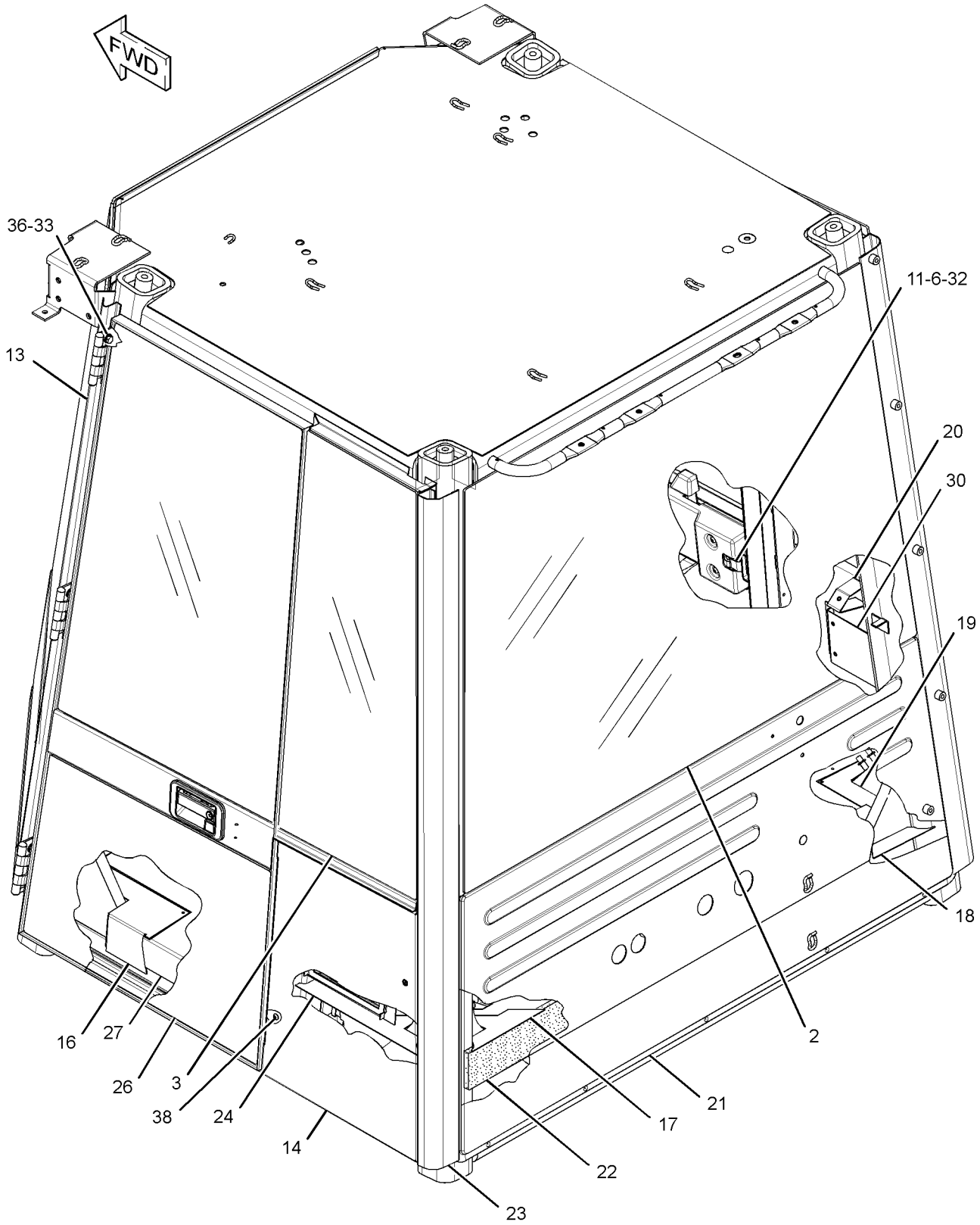

GRAPHIC #2 **<END>** g01686317

OPERATOR STATION

292-6895 ROPS GP-ENCLOSED

S/N: BXY1900-3999
PART OF 300-2780, 308-2727 CAB AR
AN ATTACHMENT

SMCS-7301 **i02939619**

NOTE	REF NO	GRAPHIC REF	PART NUMBER	QTY	PART NAME 1 2 3 4 5 6 (PRODUCT LEVEL)	SEE PAGE
	1	2	**111-0687**	2	STRIKER AS	
	2	2	**128-1026**	2	SHIELD-STRIKER	
	3	2	**129-2581**	1	DOOR AS	
		2	**1V-6755**	1	LATCH AS	
		2	**111-1316**	1	HINGE	
	4	1	**136-1725**	1	TRIM (RH)	
	5	1	**136-1726**	1	TRIM (LH)	
	6	1	**136-1728**	1	TRIM	
	7	1	**136-1729**	1	TRIM	
	8	1	**136-1730**	1	TRIM	
	9	2	**136-1731**	1	BRACKET AS	
	10	2	**136-1734**	1	INSULATION	
	11	1	**137-7321**	1	TRIM	
	12	1	**160-5003**	1	BRACKET AS	
	13	2	**165-4795**	1	GLASS (REAR, RH)	
	14	1	**165-4799**	1	GLASS (REAR)	
	15	1	**165-4801**	1	PANEL	
	16	1	**165-4806**	1	GLASS (FRONT, RH)	
	17	1	**165-4808**	1	GLASS-FRONT	
Y	18	2	**179-3737**	1	DOOR GP-CAB (LH)	1743
Y	19	2	**172-4387**	1	PLATFORM GP-CAB	1836
	20	2	**179-3726**	1	PANEL AS-FRONT	
Y	21	2	**179-3738**	1	DOOR GP-CAB (RH)	1745
	22	1	**180-3733**	1	TRIM AS (LH)	
	23	1	**240-9499**	1	TRIM AS (RH)	
		1	**136-9353**	1	TRIM	
	24	1	**250-3480**	1	PANEL AS-LOWER	
	25	2	**270-2481**	1	BRACKET AS	
	26	1	**301-4617**	1	CAB AS-ENCLOSED ROPS	
	27	1	**310-7584**	1	GLASS (FRONT, LH)	
	28	2	**310-7585**	1	GLASS (REAR, LH)	
	29	2	**7T-0920**	2	BLOCK	
	30	1	**8T-4121**	28	WASHER-HARD (11X21X2.5-MM THK)	
M	31	1	**8T-4133**	4	NUT (M10X1.5-THD)	
M	32	1	**8T-4136**	4	BOLT (M10X1.5X25-MM)	
M	33	1	**8T-4137**	20	BOLT (M10X1.5X20-MM)	
M	34	2	**9X-2044**	1	SCREW-TRUSS HEAD (M6X1X16-MM)	
M	35	2	**9X-2042**	2	SCREW-TRUSS HEAD (M6X1X12-MM)	
	36	1	**5P-5768**		SEAL (4.2-M)	
	36A	1	**5P-5768**		SEAL (3.6-M)	
	36B	1	**5P-5768**		SEAL (2.9-M EACH)	
	36C	2	**5P-5768**		SEAL (2.5-M EACH)	

M-METRIC PART
Y-SEPARATE ILLUSTRATION

292-6895 ROPS GP-ENCLOSED *(contd.)* **i02939619**

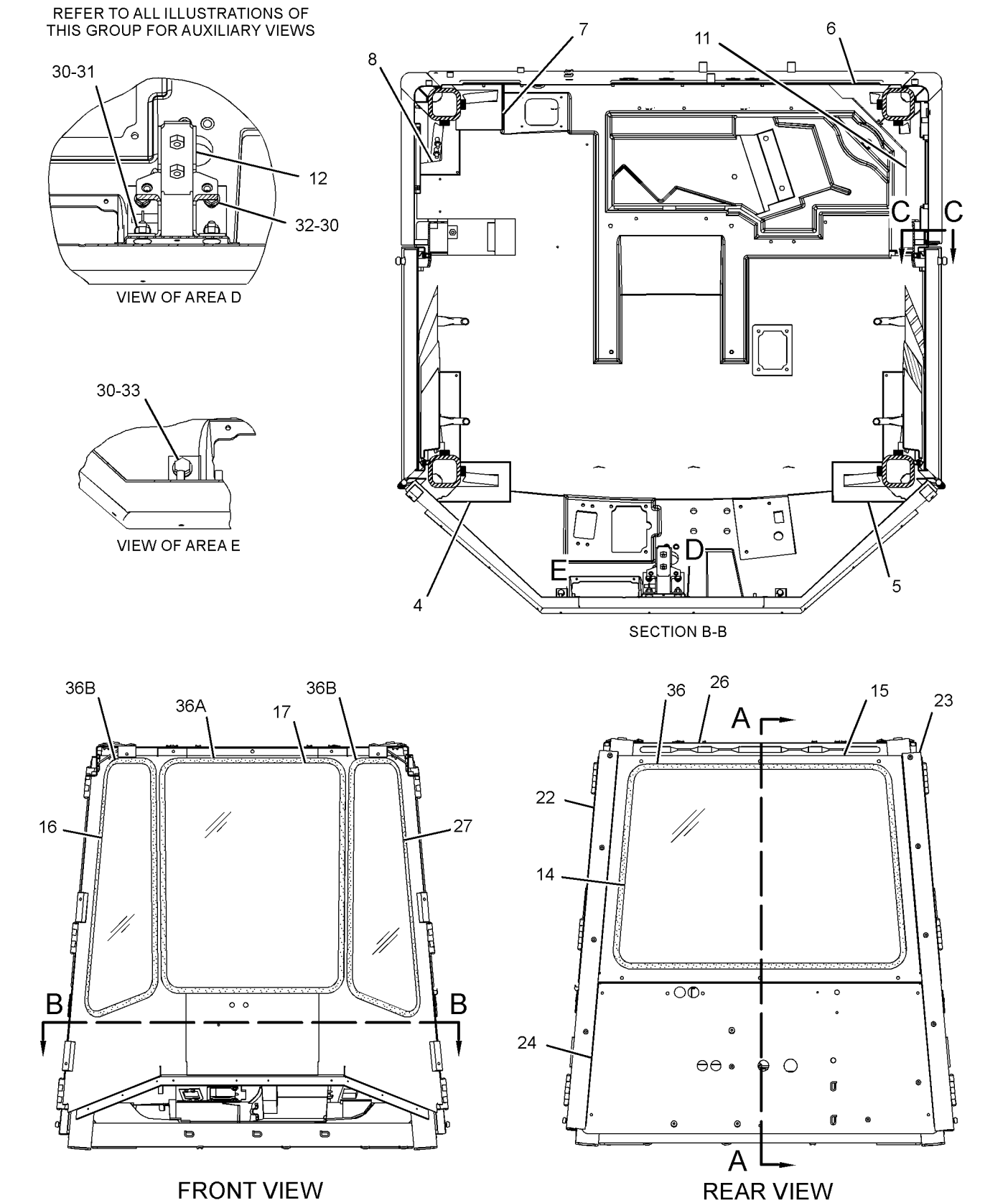

GRAPHIC #1 g01716897

292-6895 ROPS GP-ENCLOSED *(contd.)* **i02939619**

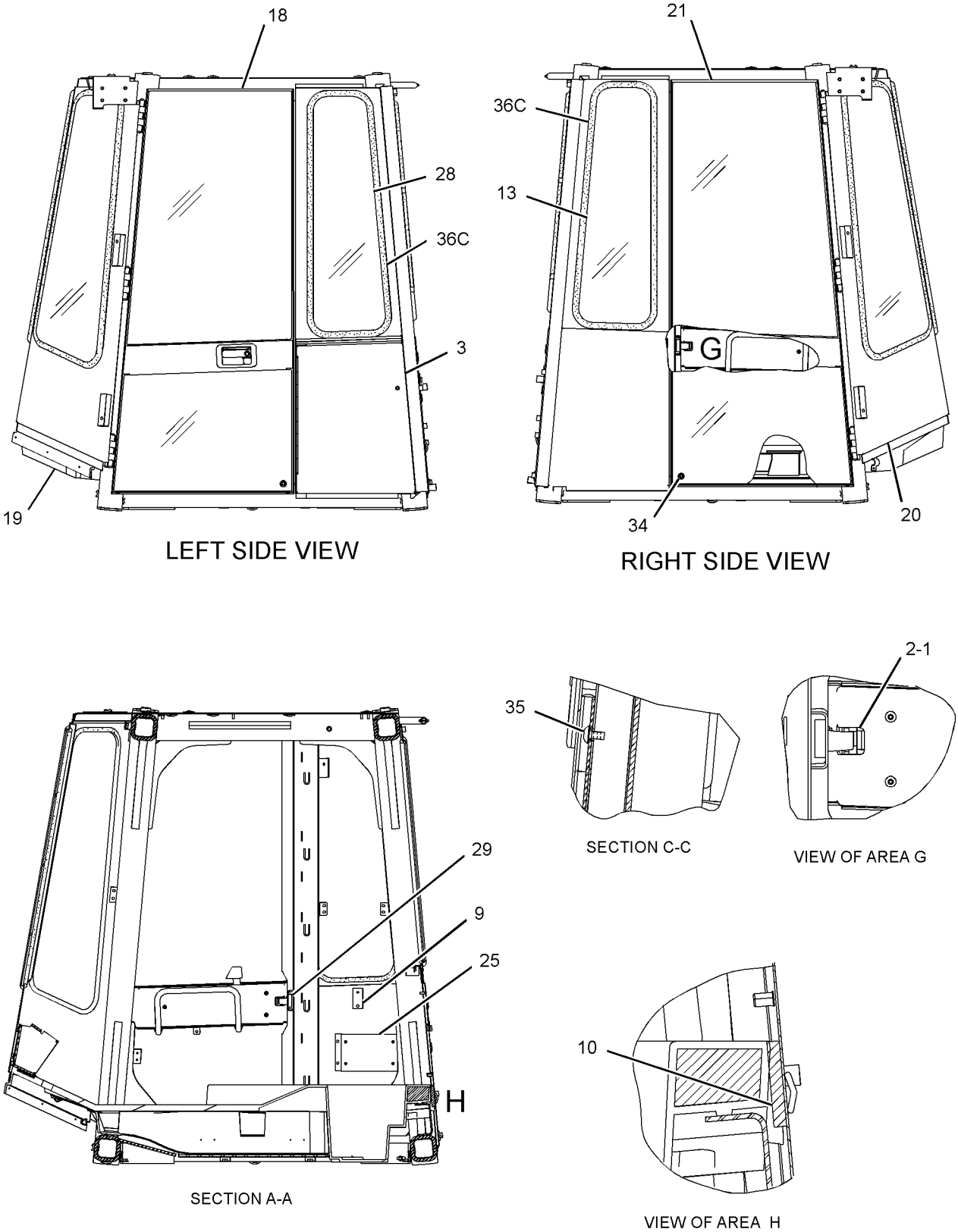

GRAPHIC #2 **<END>** g01716900

OPERATOR STATION

292-6895 ROPS GP-ENCLOSED

S/N: BXY4000-UP
PART OF 300-2780, 308-2727 CAB AR
AN ATTACHMENT

SMCS-7301 **i03769195**

NOTE	REF NO	GRAPHIC REF	PART NUMBER	QTY	PART NAME 1 2 3 4 5 6 (PRODUCT LEVEL)	SEE PAGE
	1	2	**111-0687**	2	STRIKER AS	
	2	2	**128-1026**	2	SHIELD-STRIKER	
	3	2	**129-2581**	1	DOOR AS	
		2	**1V-6755**	1	LATCH AS	
		2	**111-1316**	1	HINGE	
	4	1	**136-1725**	1	TRIM (RH)	
	5	1	**136-1726**	1	TRIM (LH)	
	6	1	**136-1728**	1	TRIM	
	7	1	**136-1729**	1	TRIM	
	8	1	**136-1730**	1	TRIM	
C	9	2	**114-9252**	1	BRACKET AS	
	10	2	**136-1734**	1	INSULATION	
	11	1	**137-7321**	1	TRIM	
	12	1	**160-5003**	1	BRACKET AS	
C	13	2	**351-9961**	1	GLASS-REAR SIDE (RH)	
C	14	1	**351-9962**	1	GLASS-REAR	
	15	1	**165-4801**	1	PANEL	
	16	1	**165-4806**	1	GLASS (FRONT, RH)	
	17	1	**165-4808**	1	GLASS-FRONT	
Y	18	2	**179-3737**	1	DOOR GP-CAB (LH)	1743
Y	19	2	**172-4387**	1	PLATFORM GP-CAB	1836
	20	2	**179-3726**	1	PANEL AS-FRONT	
Y	21	2	**179-3738**	1	DOOR GP-CAB (RH)	1745
	22	1	**180-3733**	1	TRIM AS (LH)	
	23	1	**240-9499**	1	TRIM AS (RH)	
	24	1	**250-3480**	1	PANEL AS-LOWER	
C	25	2	**343-3145**	1	BRACKET AS	
	26	1	**301-4617**	1	CAB AS-ENCLOSED ROPS	
	27	1	**310-7584**	1	GLASS (FRONT, LH)	
C	28	2	**351-9960**	1	GLASS-REAR SIDE (LH)	
	29	2	**7T-0920**	2	BLOCK	
	30	1	**8T-4121**	28	WASHER-HARD (11X21X2.5-MM THK)	
M	31	1	**8T-4133**	4	NUT (M10X1.5-THD)	
M	32	1	**8T-4136**	4	BOLT (M10X1.5X25-MM)	
M	33	1	**8T-4137**	20	BOLT (M10X1.5X20-MM)	
M	34	2	**9X-2044**	1	SCREW-TRUSS HEAD (M6X1X16-MM)	
M	35	2	**9X-2042**	2	SCREW-TRUSS HEAD (M6X1X12-MM)	
CE	36	1	**3E-9413**		SEAL (414-CM)	
CE	36A	1	**3E-9413**		SEAL (360-CM)	
CE	36B	1	**3E-9413**		SEAL (284-CM EACH)	
CE	36C	2	**3E-9413**		SEAL (250-CM EACH)	

C-CHANGE FROM PREVIOUS TYPE
E-ORDER BY THE CENTIMETER
M-METRIC PART
Y-SEPARATE ILLUSTRATION

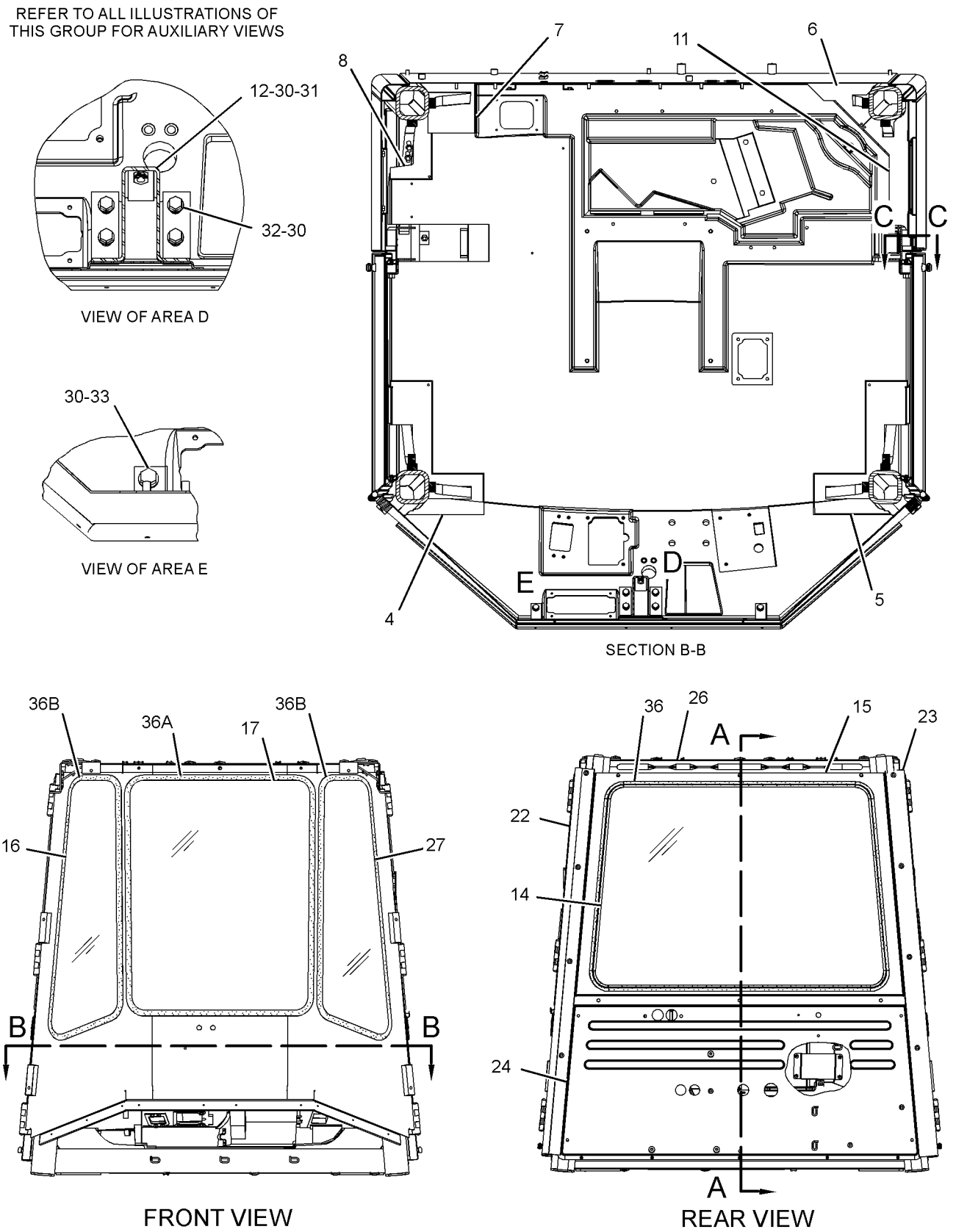

GRAPHIC #1

g02057794

292-6895 ROPS GP-ENCLOSED *(contd.)* **i03769195**

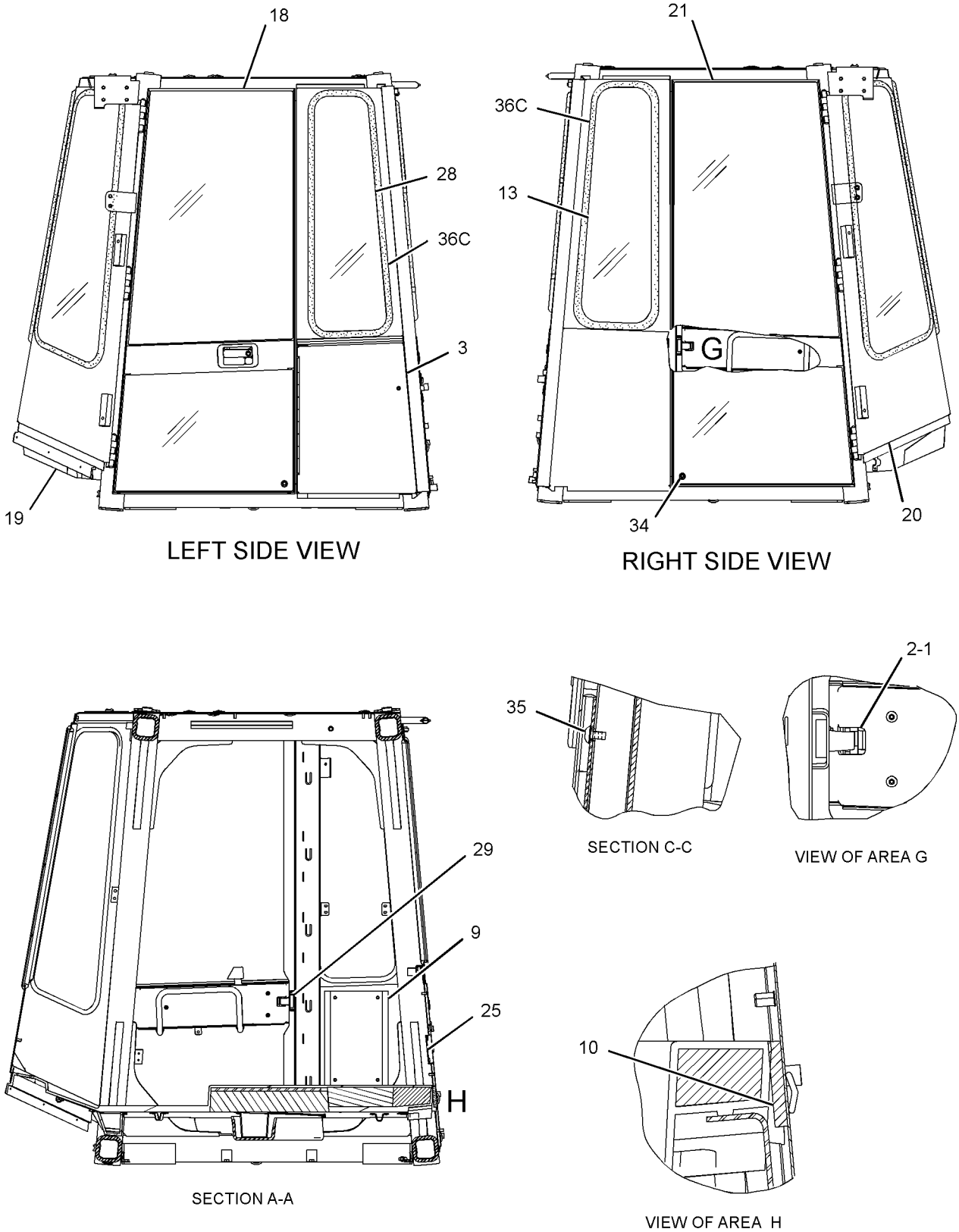

GRAPHIC #2 **<END>** g02057795

OPERATOR STATION

308-2708 ROPS GP-ENCLOSED

S/N: BXY1900-3999
PART OF 2Q-8732 CAB AR
AN ATTACHMENT

SMCS-7301 **i03377221**

NOTE	REF NO	GRAPHIC REF	PART NUMBER	QTY	PART NAME 1 2 3 4 5 6 (PRODUCT LEVEL)	SEE PAGE
	1	2	**107-4600**	1	GLASS (RIGHT SIDE, REAR)	
	2	2	**107-4601**	1	GLASS (REAR)	
	3	2	**107-4602**	1	GLASS (LEFT SIDE, REAR)	
	4	2	**107-4603**	1	GLASS (FRONT)	
	5	1	**107-7306**	1	SHEET AS	
	6	1	**111-0687**	2	STRIKER AS	
	7	2	**121-3274**	1	GLASS (RIGHT SIDE, FRONT)	
	8	2	**121-3275**	1	GLASS (LEFT SIDE, FRONT)	
	9	2	**121-3277**	1	SHEET AS (LEFT SIDE, FRONT)	
	10	2	**121-3278**	1	SHEET AS (RIGHT SIDE, FRONT)	
	11	1	**128-1026**	2	SHIELD-STRIKER	
	12	1	**129-2570**	1	CHANNEL AS	
		1	**5D-9629**	2	ROD	
	13	1	**129-2572**	1	CHANNEL	
	14	2	**129-2581**	1	DOOR AS	
		2	**1V-6755**	1	LATCH AS	
		2	**111-1316**	1	HINGE	
	15	1	**136-1725**	1	TRIM (RH)	
	16	1	**136-1726**	1	TRIM (LH)	
	17	1	**136-1728**	1	TRIM	
	18	1	**136-1729**	1	TRIM	
	19	1	**136-1730**	1	TRIM	
	20	1	**136-1731**	1	BRACKET AS	
	21	2	**136-1732**	1	SHEET AS	
		2	**7T-1099**	3	LINK	
M		2	**9R-2821**	1	BOSS (M10X1.5X15-MM)	
	22	1	**136-1734**	1	INSULATION	
	23	2	**136-9353**	1	TRIM	
	24	1	**137-7321**	1	TRIM	
	25	1	**160-5003**	1	BRACKET AS	
		1	**7T-1099**	1	LINK	
M		1	**8T-3490**	4	NUT-WELD (M10X1.5-THD)	
M		1	**8T-3635**	1	STUD-WELD (M12X1.75X34.93-MM OAL)	
Y	26	2	**172-4387**	1	PLATFORM GP-CAB	1836
Y	27	2	**227-3270**	1	DOOR GP-CAB (WITH SLIDING WINDOW, LH)	1747
	28	2	**240-9499**	1	TRIM AS (RH)	
		2	**136-9353**	1	TRIM	
	29	1	**270-2481**	1	BRACKET AS	
M		1	**6V-9632**	4	NUT-WELD (M6X1-THD)	
	30	2	**301-4549**	1	CAB AS-ENCLOSED ROPS	
Y	31	2	**308-2712**	1	DOOR GP-CAB (RH)	1749
	32	1	**7T-0920**	2	BLOCK	
	33	1,2	**8T-4121**	28	WASHER-HARD (11X21X2.5-MM THK)	
M	34	1	**8T-4133**	4	NUT (M10X1.5-THD)	
M	35	1	**8T-4136**	4	BOLT (M10X1.5X25-MM)	
M	36	1,2	**8T-4137**	20	BOLT (M10X1.5X20-MM)	
M	38	2	**9X-2042**	2	SCREW-TRUSS HEAD (M6X1X12-MM)	

M-METRIC PART
Y-SEPARATE ILLUSTRATION

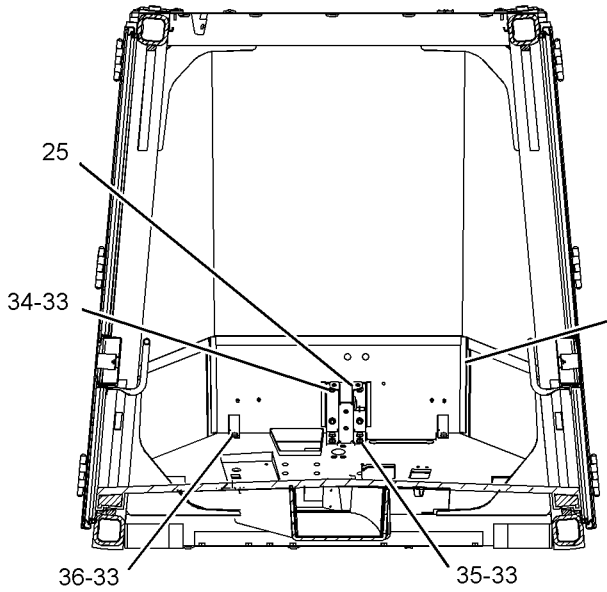

SECTION A-A

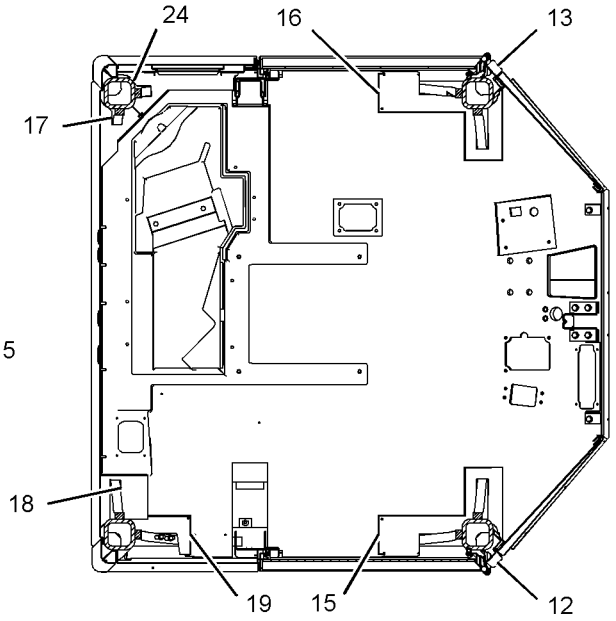

SECTION B-B

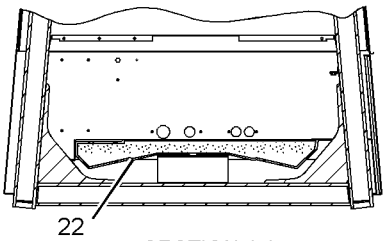

SECTION J-J

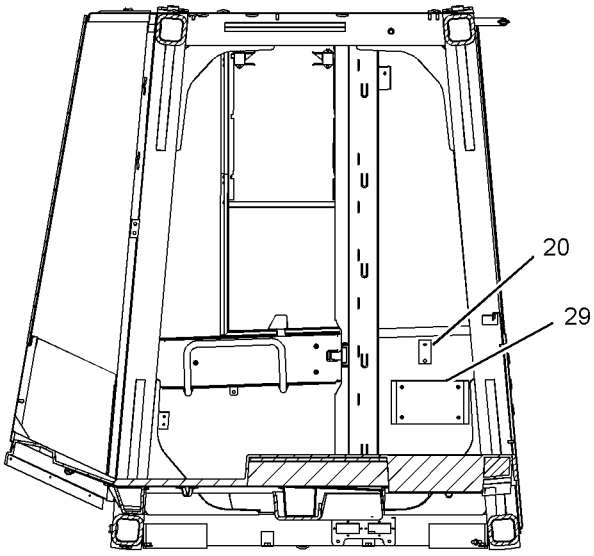

SECTION C-C

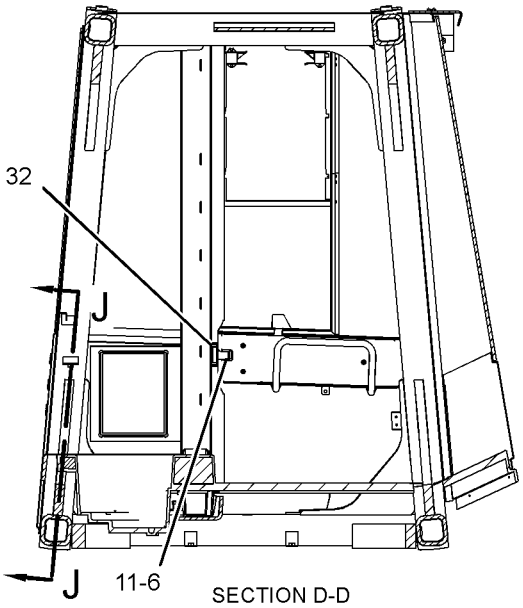

SECTION D-D

GRAPHIC #1 g01370443

REFER TO ALL ILLUSTRATIONS OF
THIS GROUP FOR AUXILIARY VIEWS

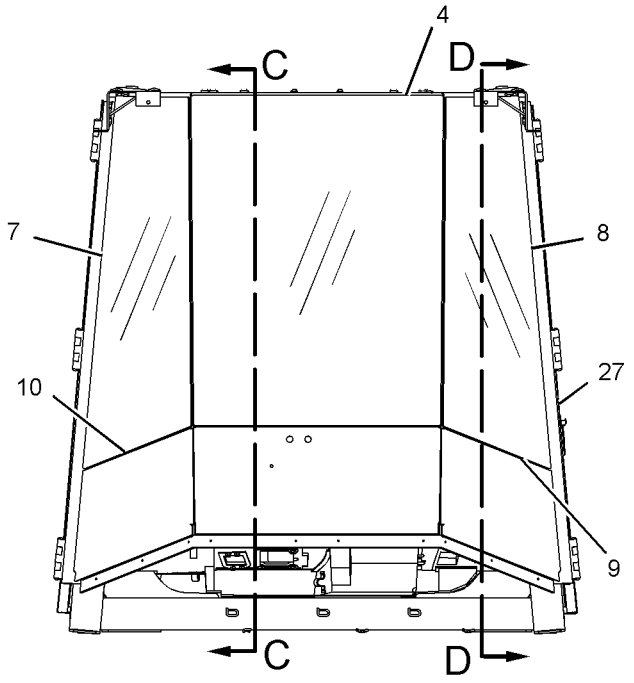

FRONT VIEW

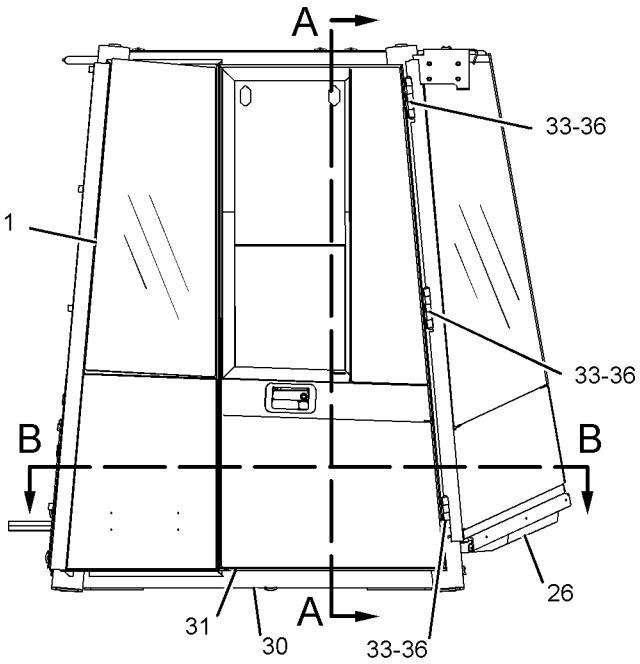

RIGHT SIDE VIEW

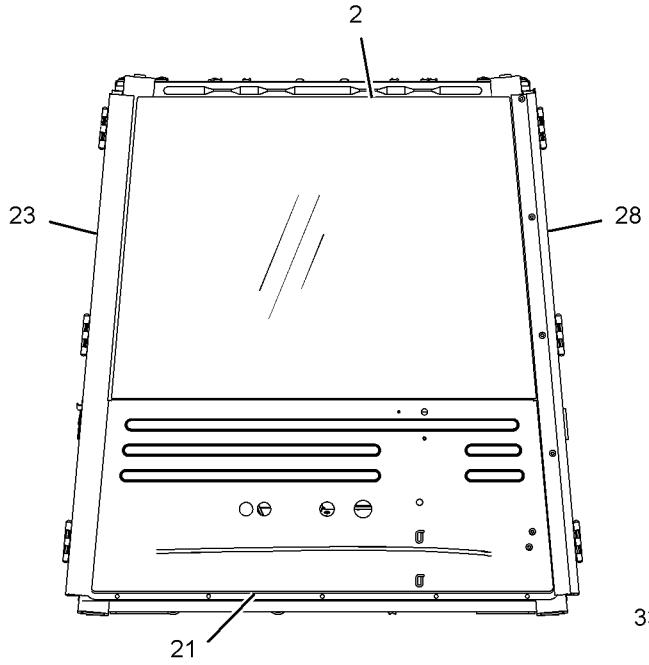

REAR VIEW

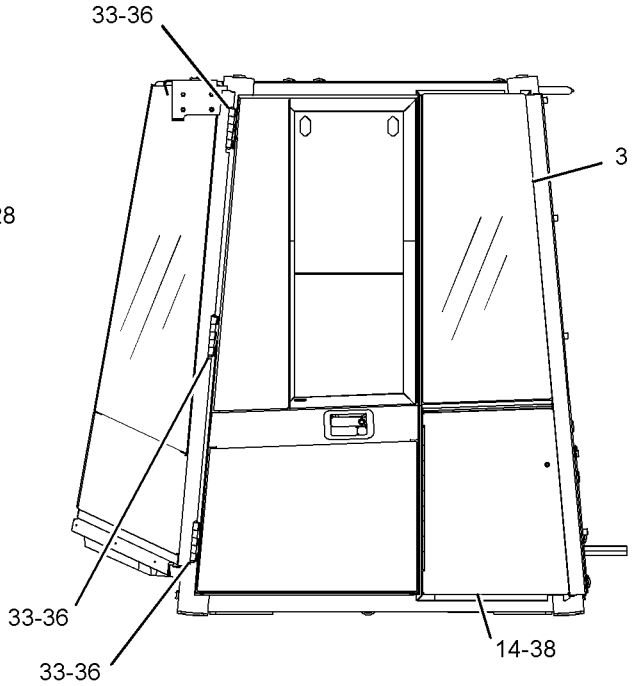

LEFT SIDE VIEW

GRAPHIC #2 **<END>** g01955485

OPERATOR STATION

308-2708 ROPS GP-ENCLOSED

S/N: BXY4000-UP

PART OF 2Q-8732 CAB AR, 356-3417 CAB AR-ENCLOSED ROPS

AN ATTACHMENT

SMCS-7301 **i03769291**

NOTE	REF NO	GRAPHIC REF	PART NUMBER	QTY	PART NAME 1 2 3 4 5 6 (PRODUCT LEVEL)	SEE PAGE
C	1	1	**351-9959**	1	GLASS (RIGHT SIDE, REAR)	
C	2	1	**351-9958**	1	GLASS (REAR)	
C	3	1	**351-9963**	1	GLASS (LEFT SIDE, REAR)	
	4	1	**107-4603**	1	GLASS (FRONT)	
	5	2	**107-7306**	1	SHEET AS	
	6	2	**111-0687**	2	STRIKER AS	
	7	1	**121-3274**	1	GLASS (RIGHT SIDE, FRONT)	
	8	1	**121-3275**	1	GLASS (LEFT SIDE, FRONT)	
	9	1	**121-3277**	1	SHEET AS (LEFT SIDE, FRONT)	
	10	1	**121-3278**	1	SHEET AS (RIGHT SIDE, FRONT)	
	11	2	**128-1026**	2	SHIELD-STRIKER	
	12	2	**129-2570**	1	CHANNEL AS	
		2	**5D-9629**	2	ROD	
	13	2	**129-2572**	1	CHANNEL	
	14	1	**129-2581**	1	DOOR AS	
		1	**1V-6755**	1	LATCH AS	
		1	**111-1316**	1	HINGE	
	15	2	**136-1725**	1	TRIM (RH)	
	16	2	**136-1726**	1	TRIM (LH)	
	17	2	**136-1728**	1	TRIM	
	18	2	**136-1729**	1	TRIM	
	19	2	**136-1730**	1	TRIM	
C	20	2	**114-9252**	1	BRACKET AS	
	21	1	**136-1732**	1	SHEET AS	
		1	**7T-1099**	3	LINK	
M		1	**9R-2821**	1	BOSS (M10X1.5X15-MM)	
	22	2	**136-1734**	1	INSULATION	
	23	1	**136-9353**	1	TRIM	
	24	2	**137-7321**	1	TRIM	
	25	2	**160-5003**	1	BRACKET AS	
		2	**7T-1099**	1	LINK	
M		2	**8T-3490**	4	NUT-WELD (M10X1.5-THD)	
M		2	**8T-3635**	1	STUD-WELD (M12X1.75X34.93-MM OAL)	
Y	26	1	**172-4387**	1	PLATFORM GP-CAB	1836
Y	27	1	**227-3270**	1	DOOR GP-CAB (WITH SLIDING WINDOW, LH)	1747
	28	1	**240-9499**	1	TRIM AS (RH)	
		1	**136-9353**	1	TRIM	
C	29	2	**343-3145**	1	BRACKET AS	
	30	1	**301-4549**	1	CAB AS-ENCLOSED ROPS	
CY	31	1	**179-3738**	1	DOOR GP-CAB (RH)	1745
	32	2	**7T-0920**	2	BLOCK	
	33	1,2	**8T-4121**	28	WASHER-HARD (11X21X2.5-MM THK)	
M	34	2	**8T-4133**	4	NUT (M10X1.5-THD)	
M	35	2	**8T-4136**	4	BOLT (M10X1.5X25-MM)	
M	36	1,2	**8T-4137**	20	BOLT (M10X1.5X20-MM)	
M	38	1	**9X-2042**	2	SCREW-TRUSS HEAD (M6X1X12-MM)	

C-CHANGE FROM PREVIOUS TYPE
M-METRIC PART
Y-SEPARATE ILLUSTRATION

REFER TO ALL ILLUSTRATIONS OF
THIS GROUP FOR AUXILIARY VIEWS

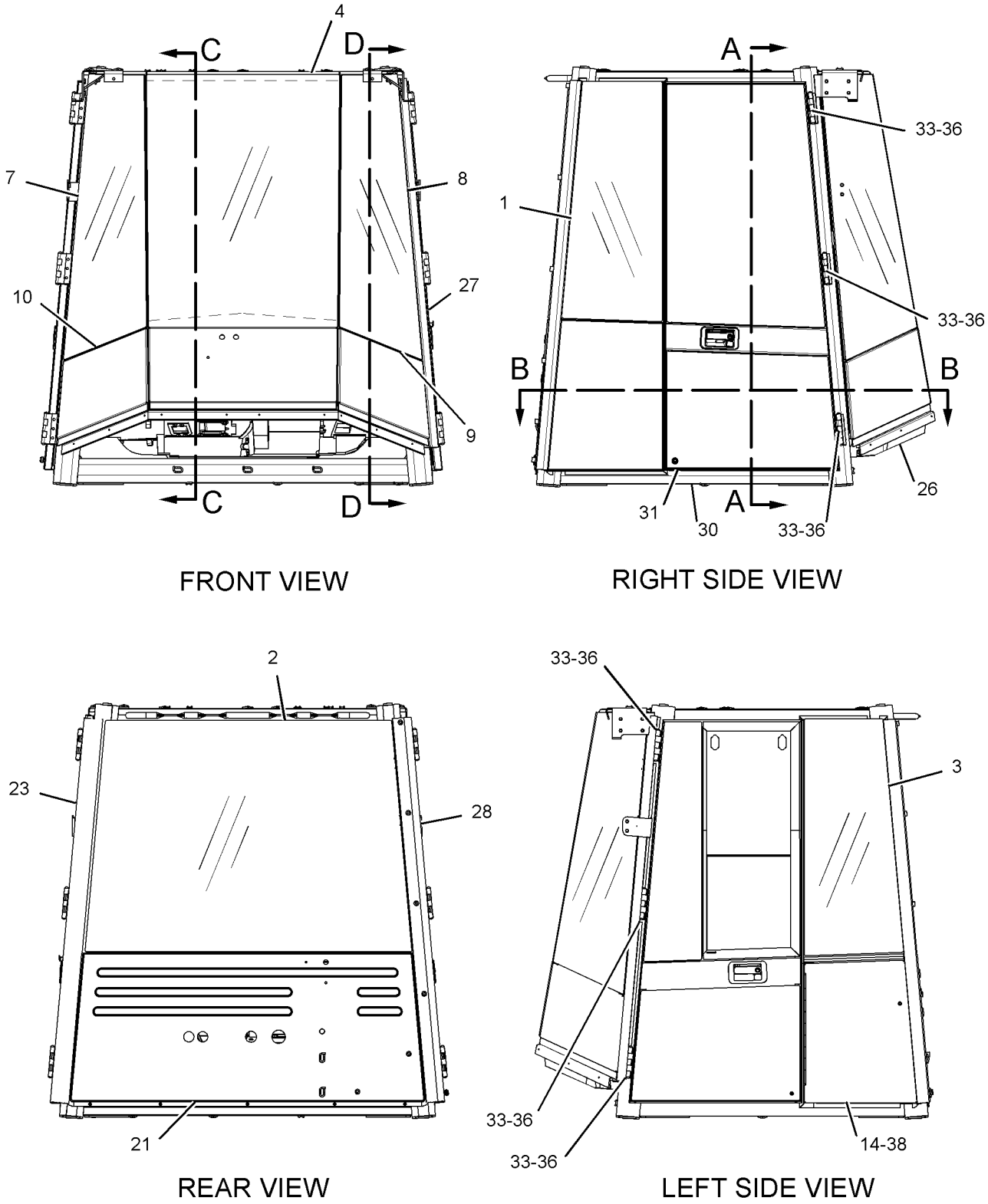

GRAPHIC #1 g02057377

308-2708 **ROPS GP-ENCLOSED** *(contd.)* **i03769291**

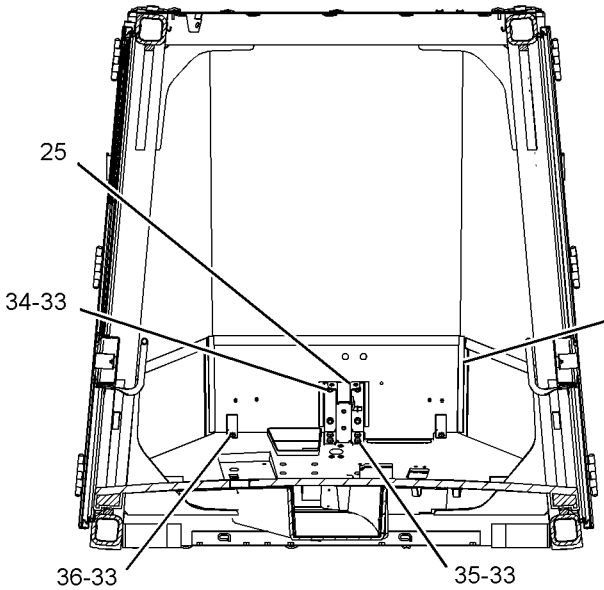

SECTION A-A

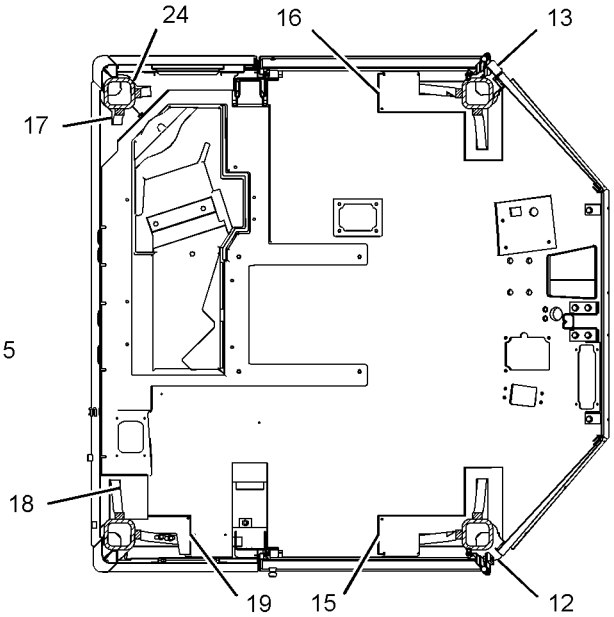

SECTION B-B

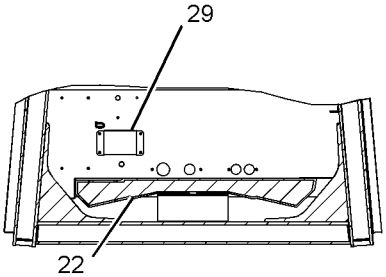

SECTION J-J

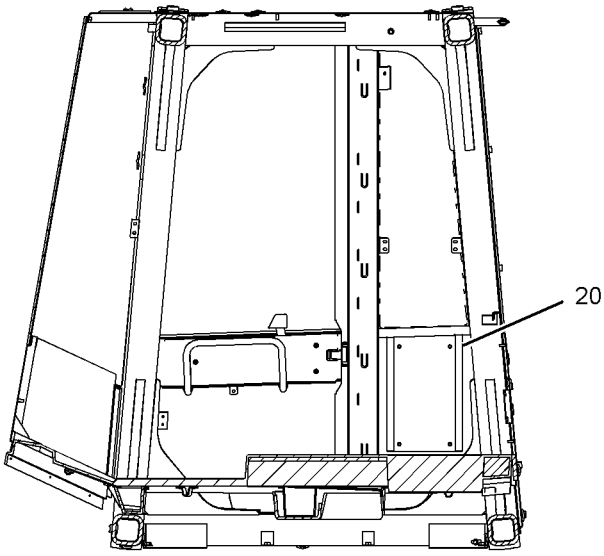

SECTION C-C

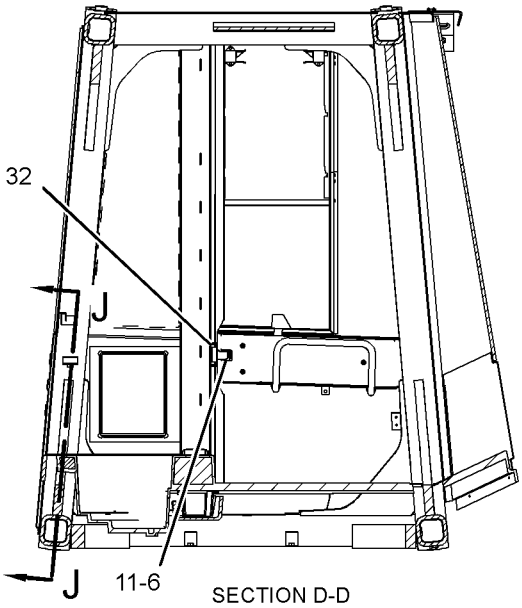

SECTION D-D

GRAPHIC #2 **<END>** g02057378

OPERATOR STATION

117-1410 SEALING GP-GLASS

S/N: BXY1-UP

PART OF 227-3190, 292-6110, 346-3826 CAB AR

SMCS-7310, 7340 **i02737077**

NOTE	PART NUMBER	QTY	PART NAME 1 2 3 4 5 6 (PRODUCT LEVEL)	SEE PAGE
B	**311-3898**	1	ADHESIVE	

B-USE AS REQUIRED

<END>

OPERATOR STATION

222-0345 SEAT BELT GP—RETRACTABLE

S/N: BXY1-UP

PART OF 178-0606, 285-8424 SEAT GP

ALSO AN ATTACHMENT

SMCS-7327 **i03548163**

NOTE	REF NO	GRAPHIC REF	PART NUMBER	QTY	PART NAME 1 2 3 4 5 6 (PRODUCT LEVEL)	SEE PAGE
F			**0T-0244**	1	BOLT (7/16-20X1.25-IN)	
F			**205-6388**	1	BOLT (7/16-20X1.75-IN)	

F-NOT SHOWN

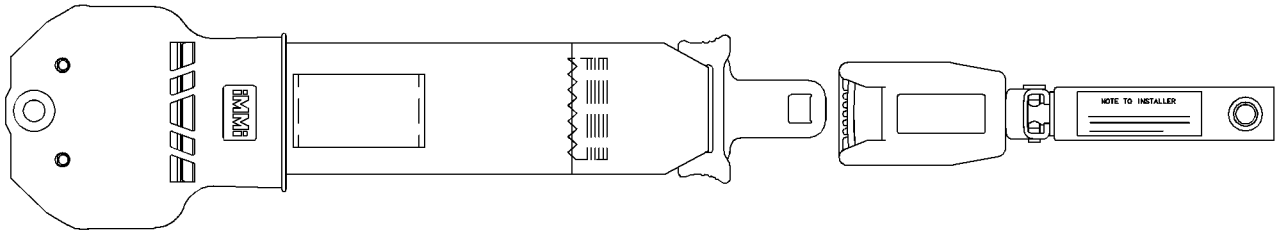

GRAPHIC #1 **<END>** g01196135

OPERATOR STATION

178-0603 SEAT GP—CLOTH

S/N: BXY1-UP
PART OF 178-0606 SEAT GP
TYPE 1

SMCS-7312 **i03111120**

NOTE	REF NO	GRAPHIC REF	PART NUMBER	QTY	PART NAME 1 2 3 4 5 6 (PRODUCT LEVEL)	SEE PAGE
	1	1	**218-0861**	1	PAN AS	
		1	**8T-9082**	5	RIVET-POP	
		1	**217-9049**	1	CUSHION AS	
	2	1	**143-1288**	8	LOCKNUT-FLANGE (3/8-16-THD)	
	3	1	**171-1230**	6	SCREW-BUTTON HEAD (3/8-16X1-IN)	
	4	1	**171-6682**	1	BAR	
	5	1	**172-2416**	2	PIN	
Y	6	1	*173-1028*	1	ADJUSTER GP-SEAT	1691
	7	1	**177-1863**	2	BOLT-PIVOT (3/8-16X2.89-IN)	
Y	8	1	*210-2270*	1	RECLINER GP-SEAT	1854
Y	9	1	*178-0604*	1	PAN GP-BACKREST (CLOTH)	1822
	10	1	**184-2298**	1	ROD	
	11	1	**184-2299**	4	WASHER (7X25.4X2.54-MM THK)	
	12	1	**095-0843**	2	PIN-COTTER	
	13	1	**5V-1496**	2	RETAINER	
	14	1	**6V-7646**	2	WASHER-HARD (7.2X25X2-MM THK)	
	15	1	**8T-0328**	1	WASHER-HARD (5.5X10X1-MM THK)	
	16	1	**8T-4205**	1	WASHER-HARD (7.2X14.5X2-MM THK)	
	17	1	**8Y-6277**	2	SPACER (10.5X28.6X10-MM THK)	

Y-SEPARATE ILLUSTRATION

178-0603 **SEAT GP** *(contd.)* **i03111120**

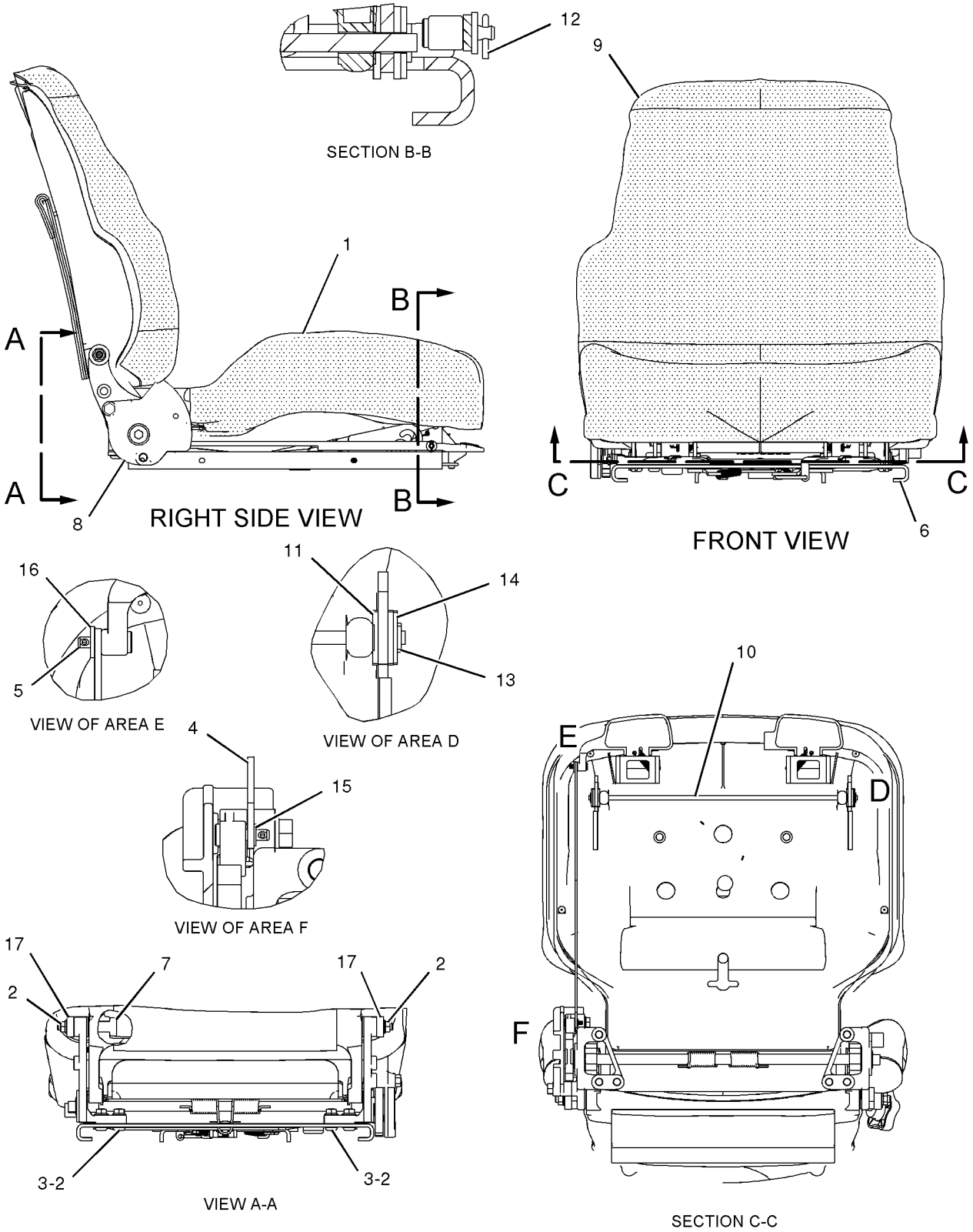

GRAPHIC #1 **<END>** g01023456

OPERATOR STATION

178-0603 SEAT GP—CLOTH

S/N: BXY1-UP
PART OF 178-0606 SEAT GP
ALSO AN ATTACHMENT
TYPE 2

SMCS-7312 **i03111121**

NOTE	REF NO	GRAPHIC REF	PART NUMBER	QTY	PART NAME 1 2 3 4 5 6 (PRODUCT LEVEL)	SEE PAGE
	1	1	**218-0861**	1	PAN AS	
		1	**8T-9082**	5	RIVET-POP	
		1	**217-9049**	1	CUSHION AS	
	2	1	**143-1288**	8	LOCKNUT-FLANGE (3/8-16-THD)	
	3	1	**171-1230**	6	SCREW-BUTTON HEAD (3/8-16X1-IN)	
	4	1	**171-6682**	1	BAR	
	5	1	**172-2416**	2	PIN	
Y	6	1	*173-1028*	1	ADJUSTER GP-SEAT	1691
	7	1	**177-1863**	2	BOLT-PIVOT (3/8-16X2.89-IN)	
Y	8	1	*210-2270*	1	RECLINER GP-SEAT	1854
CY	9	1	*292-9237*	1	PAN GP-BACKREST (CLOTH)	1825
	10	1	**184-2298**	1	ROD	
	11	1	**184-2299**	4	WASHER (7X25.4X2.54-MM THK)	
	12	1	**095-0843**	2	PIN-COTTER	
	13	1	**5V-1496**	2	RETAINER	
	14	1	**6V-7646**	2	WASHER-HARD (7.2X25X2-MM THK)	
	15	1	**8T-0328**	1	WASHER-HARD (5.5X10X1-MM THK)	
	16	1	**8T-4205**	1	WASHER-HARD (7.2X14.5X2-MM THK)	
C	17	1	**294-5042**	2	SPACER (11.1X19.5X9.67-MM THK)	

C-CHANGE FROM PREVIOUS TYPE
Y-SEPARATE ILLUSTRATION

178-0603 SEAT GP *(contd.)* **i03111121**

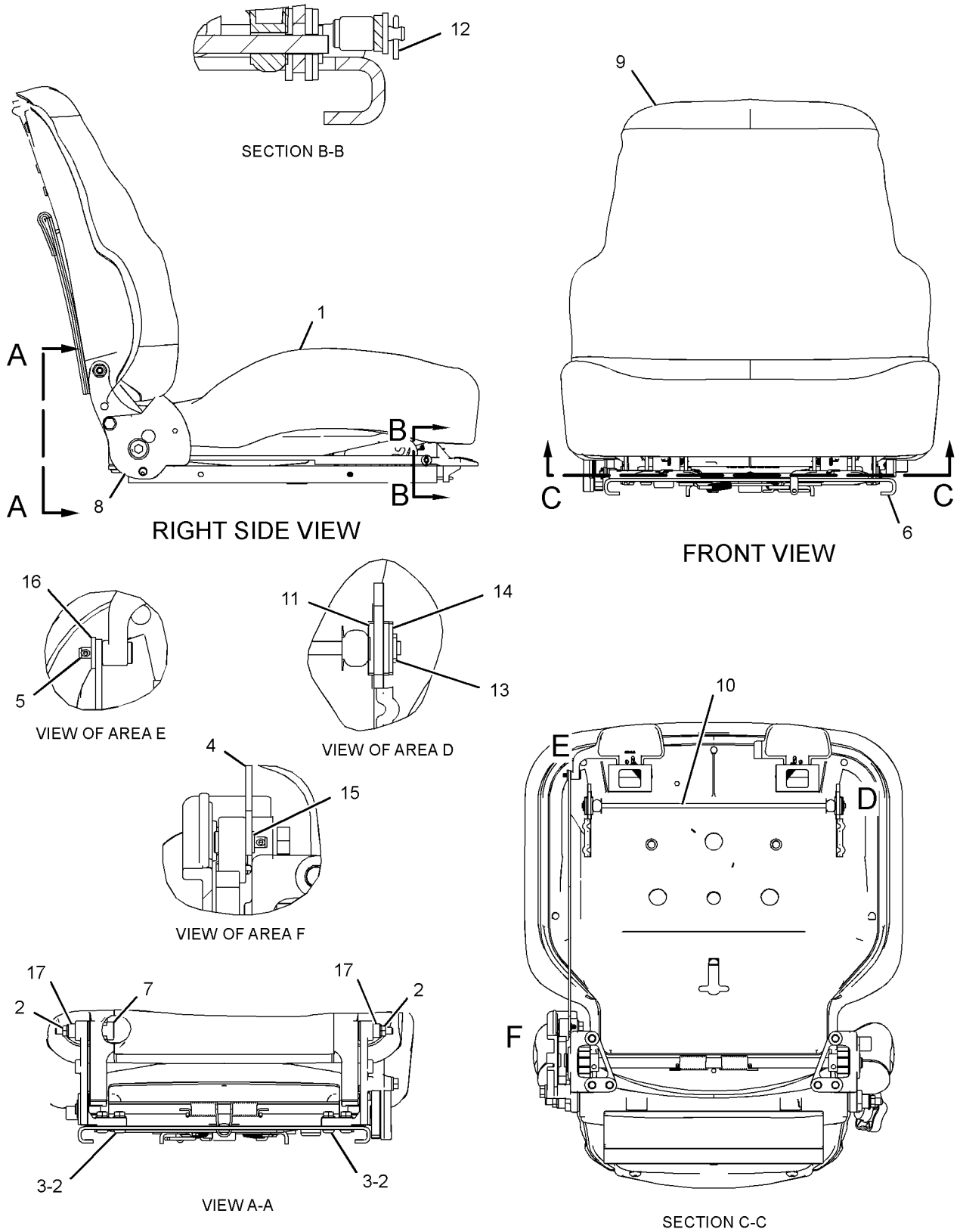

GRAPHIC #1 **<END>** g01336990

OPERATOR STATION

178-0606 SEAT GP—CLOTH

S/N: BXY1-UP
PART OF 200-3174 SEAT GP-SUSPENSION
ALSO AN ATTACHMENT

SMCS-7312 **i03615881**

NOTE	REF NO	GRAPHIC REF	PART NUMBER	QTY	PART NAME 1 2 3 4 5 6 (PRODUCT LEVEL)	SEE PAGE
	1	1	**177-4937**	1	SPACER (11.7X19.8X20.3-MM THK)	
Y	2	1	**178-0603**	1	SEAT GP (CLOTH)	1880
Y	3	1	**222-0345**	1	SEAT BELT GP (RETRACTABLE)	1879
C	4	1	**229-1494**	1	EXTENSION GP-BACKREST (CLOTH)	
		1	**117-4491**	1	ROD	
	5	1	**0T-0244**	1	BOLT (7/16-20X1.25-IN)	
	6	1	**205-6388**	1	BOLT (7/16-20X1.75-IN)	

C-CHANGE FROM PREVIOUS TYPE
Y-SEPARATE ILLUSTRATION

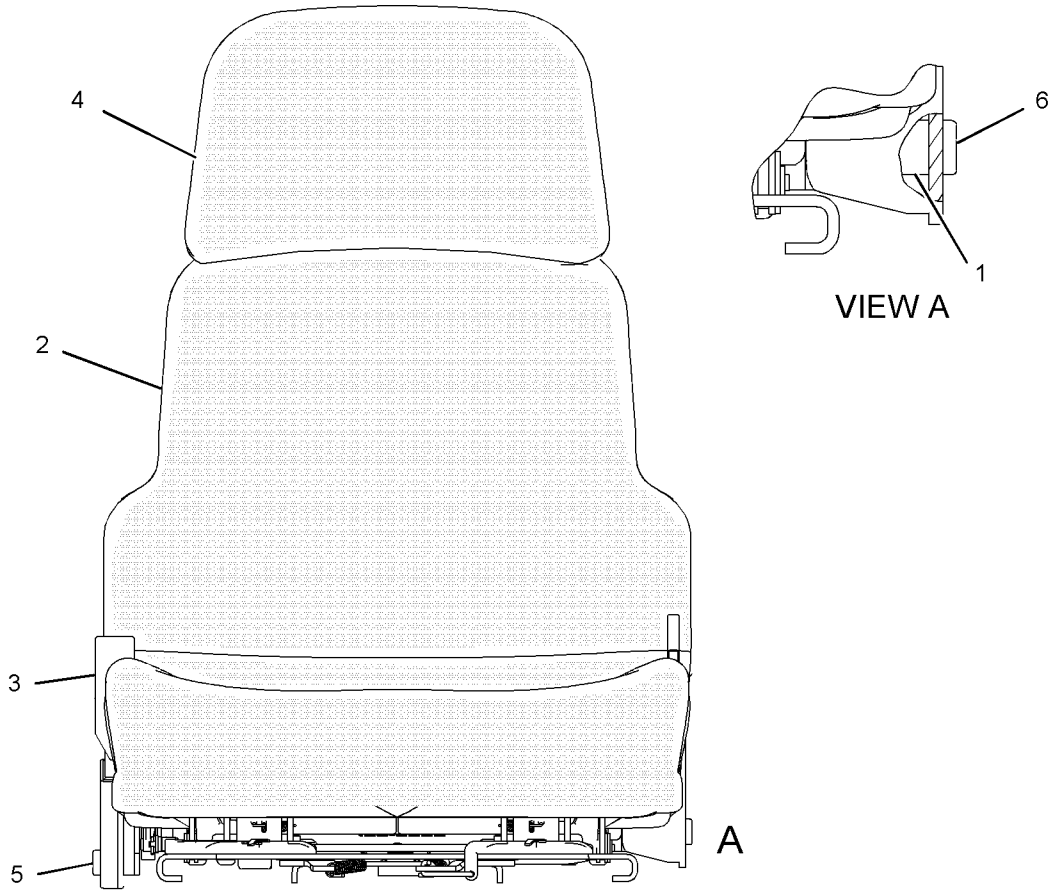

GRAPHIC #1 **<END>** g01084230

OPERATOR STATION

285-8423 SEAT GP—CLOTH, HEATED

S/N: BXY4000-UP
PART OF 285-8424 SEAT GP
AN ATTACHMENT

SMCS-7312 **i02902934**

NOTE	REF NO	GRAPHIC REF	PART NUMBER	QTY	PART NAME 1 2 3 4 5 6 (PRODUCT LEVEL)	SEE PAGE
	1	1	**143-1288**	8	LOCKNUT-FLANGE (3/8-16-THD)	
	2	1	**171-1230**	6	SCREW-BUTTON HEAD (3/8-16X1-IN)	
	3	1	**171-6682**	1	BAR	
	4	1	**172-2416**	2	PIN	
Y	5	1	*173-1028*	1	ADJUSTER GP-SEAT	1691
	6	1	**177-1863**	2	BOLT-PIVOT (3/8-16X2.89-IN)	
	7	1	**184-2298**	1	ROD	
	8	1	**184-2299**	4	WASHER (7X25.4X2.54-MM THK)	
Y	9	1	*210-2270*	1	RECLINER GP-SEAT	1854
Y	10	1	**241-5785**	1	PAN GP-SEAT	1827
	11	1	**294-5042**	2	SPACER (11.1X19.5X9.67-MM THK)	
Y	12	1	*301-4162*	1	PAN GP-BACKREST	1826
	13	1	**095-0843**	2	PIN-COTTER	
	14	1	**5V-1496**	2	RETAINER	
	15	1	**6V-7646**	2	WASHER-HARD (7.2X25X2-MM THK)	
	16	1	**8T-0328**	1	WASHER-HARD (5.5X10X1-MM THK)	
	17	1	**8T-4205**	1	WASHER-HARD (7.2X14.5X2-MM THK)	

Y-SEPARATE ILLUSTRATION

285-8423 SEAT GP *(contd.)* **i02902934**

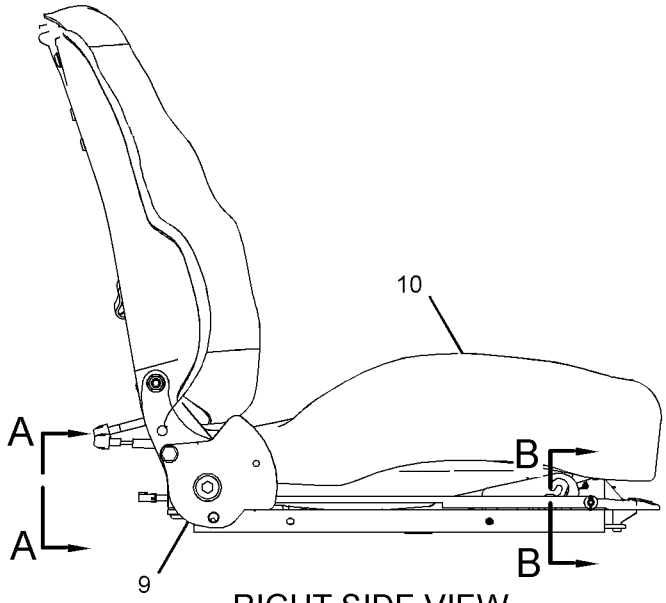

RIGHT SIDE VIEW

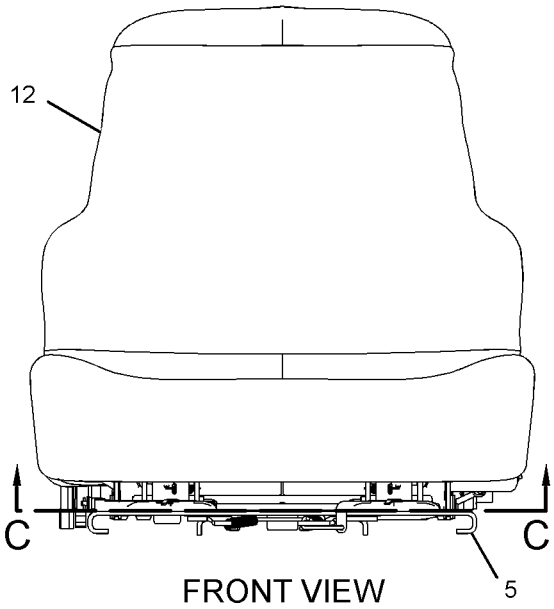

FRONT VIEW

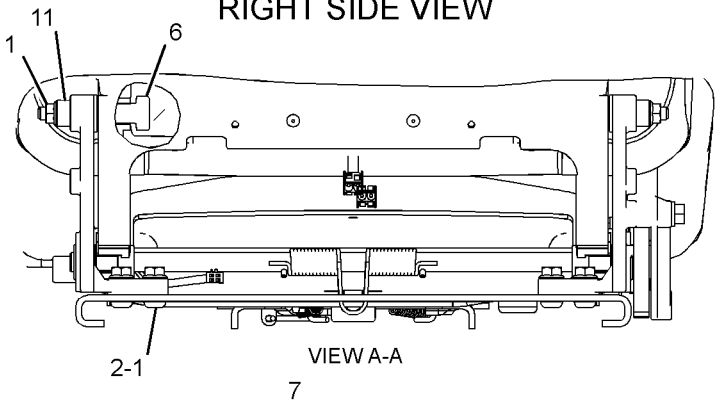

VIEW A-A

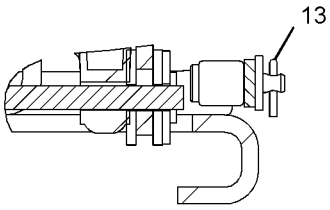

SECTION B-B

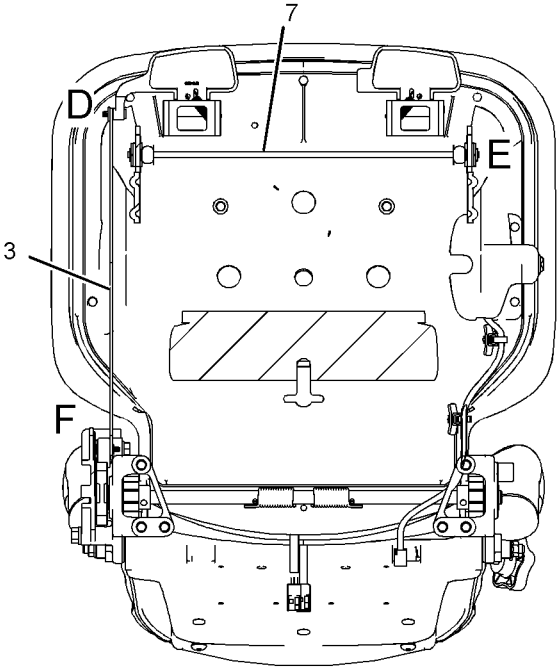

SECTION C-C

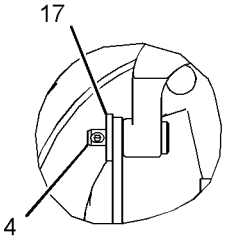

VIEW OF AREA D

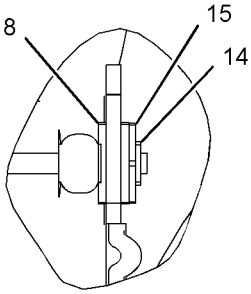

VIEW OF AREA E

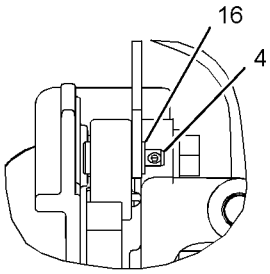

VIEW OF AREA F

GRAPHIC #1 **<END>** g01451853

OPERATOR STATION

285-8424 SEAT GP—CLOTH, HEATED

S/N: BXY4000-UP
PART OF 354-7387 SEAT GP-SUSPENSION
AN ATTACHMENT

SMCS-7312 **i02902959**

NOTE	REF NO	GRAPHIC REF	PART NUMBER	QTY	PART NAME 1 2 3 4 5 6 (PRODUCT LEVEL)	SEE PAGE
	1	1	**177-4937**	1	SPACER (11.7X19.8X20.3-MM THK)	
Y	2	1	**222-0345**	1	SEAT BELT GP (RETRACTABLE)	1879
	3	1	**229-1494**	1	EXTENSION GP-BACKREST (CLOTH)	
Y	4	1	**285-8423**	1	SEAT GP (CLOTH, HEATED)	1885
	5	1	**0T-0244**	1	BOLT (7/16-20X1.25-IN)	
	6	1	**205-6388**	1	BOLT (7/16-20X1.75-IN)	

Y-SEPARATE ILLUSTRATION

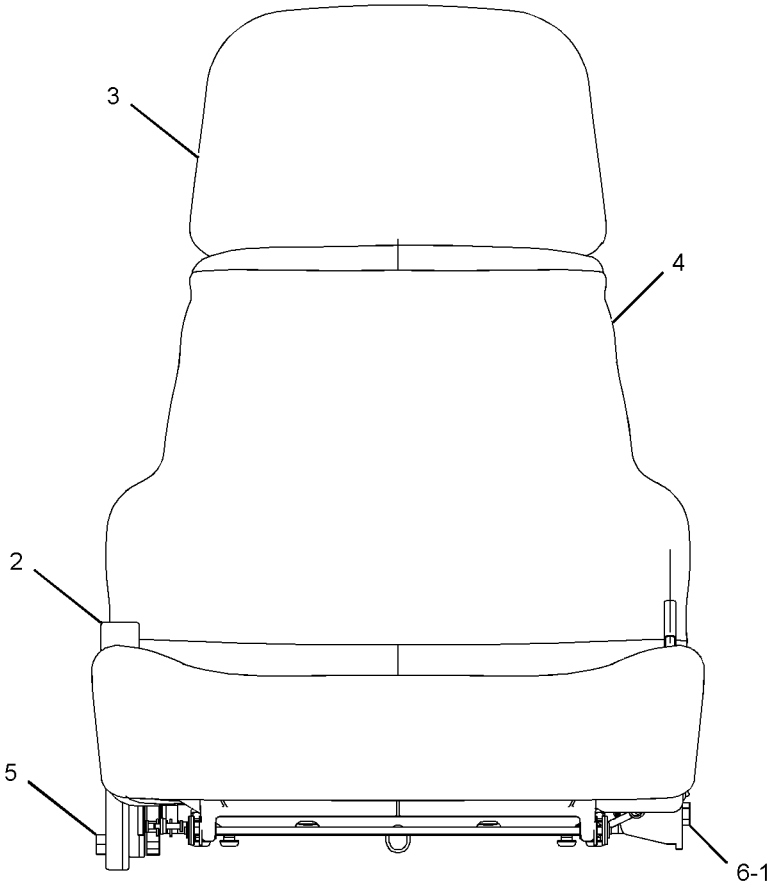

FRONT VIEW

GRAPHIC #1 **<END>** g01451877

OPERATOR STATION

200-3174 SEAT GP-SUSPENSION—CLOTH, AIR

S/N: BXY1-UP

PART OF 227-3190, 292-6110, 308-2727, 346-3826 CAB AR

ALSO AN ATTACHMENT

SMCS-7324, 7336 **i03129183**

NOTE	REF NO	GRAPHIC REF	PART NUMBER	QTY	PART NAME 1 2 3 4 5 6 (PRODUCT LEVEL)	SEE PAGE
J	1	1	**173-5787**	4	SETSCREW (1/4-20-THD)	
Y	3	1	**178-0606**	1	SEAT GP (CLOTH)	1884
Y	4	1	**191-2933**	1	SUSPENSION GP-SEAT (AIR)	1903
J	5	1	**203-7703**	2	WASHER-HARD (10.2X22.22X2.38-MM THK)	
J	6	1	**4F-4879**	1	BOLT (3/8-16X0.5-IN)	
					AVAILABLE REPAIR KIT(S):	
J			**173-7035**	1	KIT-SLIDER BLOCK (SUSPENSION SEAT)	

J-KIT MARKED J INCLUDES PARTS MARKED J
Y-SEPARATE ILLUSTRATION

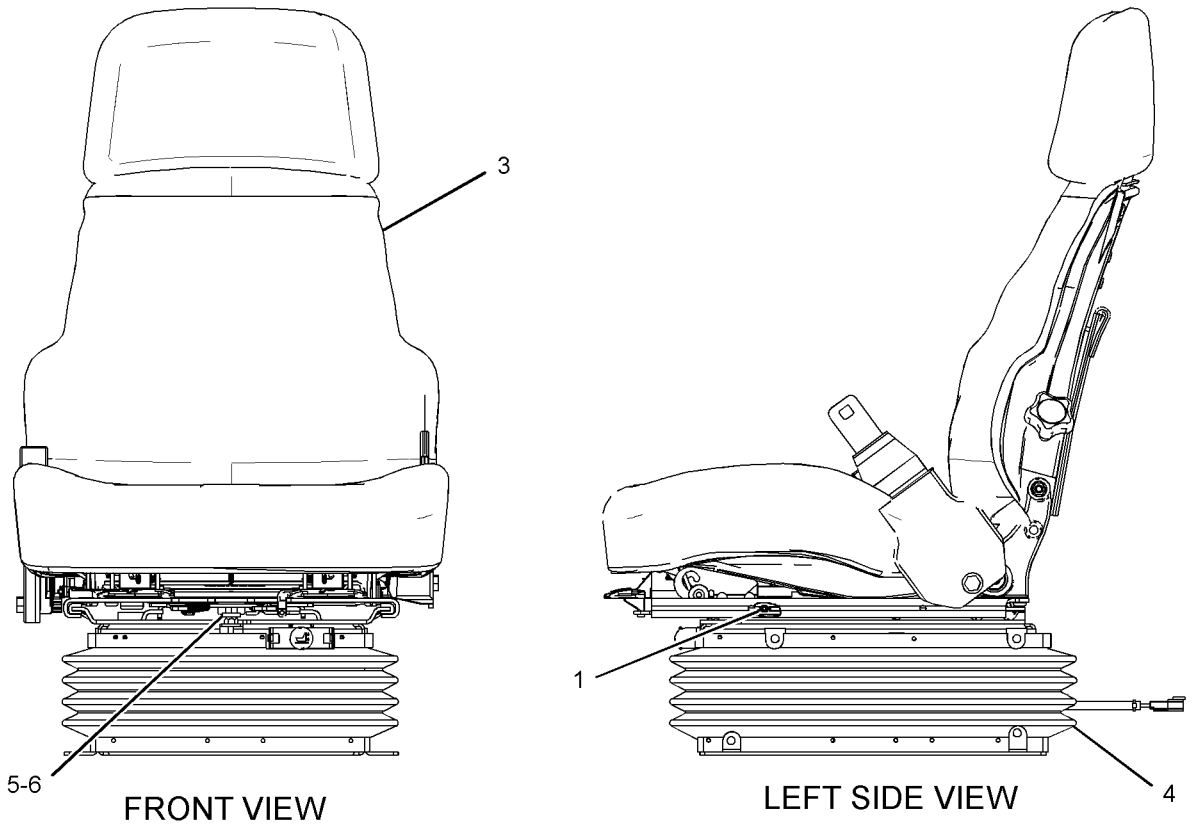

GRAPHIC #1 **<END>** g01608353

OPERATOR STATION

354-7387 SEAT GP-SUSPENSION

S/N: BXY4000-UP
AN ATTACHMENT

SMCS-7324, 7336 **i03795642**

NOTE	REF NO	GRAPHIC REF	PART NUMBER	QTY	PART NAME 1 2 3 4 5 6 (PRODUCT LEVEL)	SEE PAGE
J	1	1	**173-5787**	4	SETSCREW (1/4-20-THD)	
Y	3	1	**285-8424**	1	SEAT GP (CLOTH, HEATED)	1887
Y	4	1	**191-2933**	1	SUSPENSION GP-SEAT (AIR)	1903
J	5	1	**203-7703**	2	WASHER-HARD (10.2X22.22X2.38-MM THK)	
J	6	1	**4F-4879**	1	BOLT (3/8-16X0.5-IN)	
					AVAILABLE REPAIR KIT(S):	
J			**173-7035**	1	KIT-SLIDER BLOCK (SUSPENSION SEAT)	

J-KIT MARKED J SERVICES PARTS MARKED J
Y-SEPARATE ILLUSTRATION

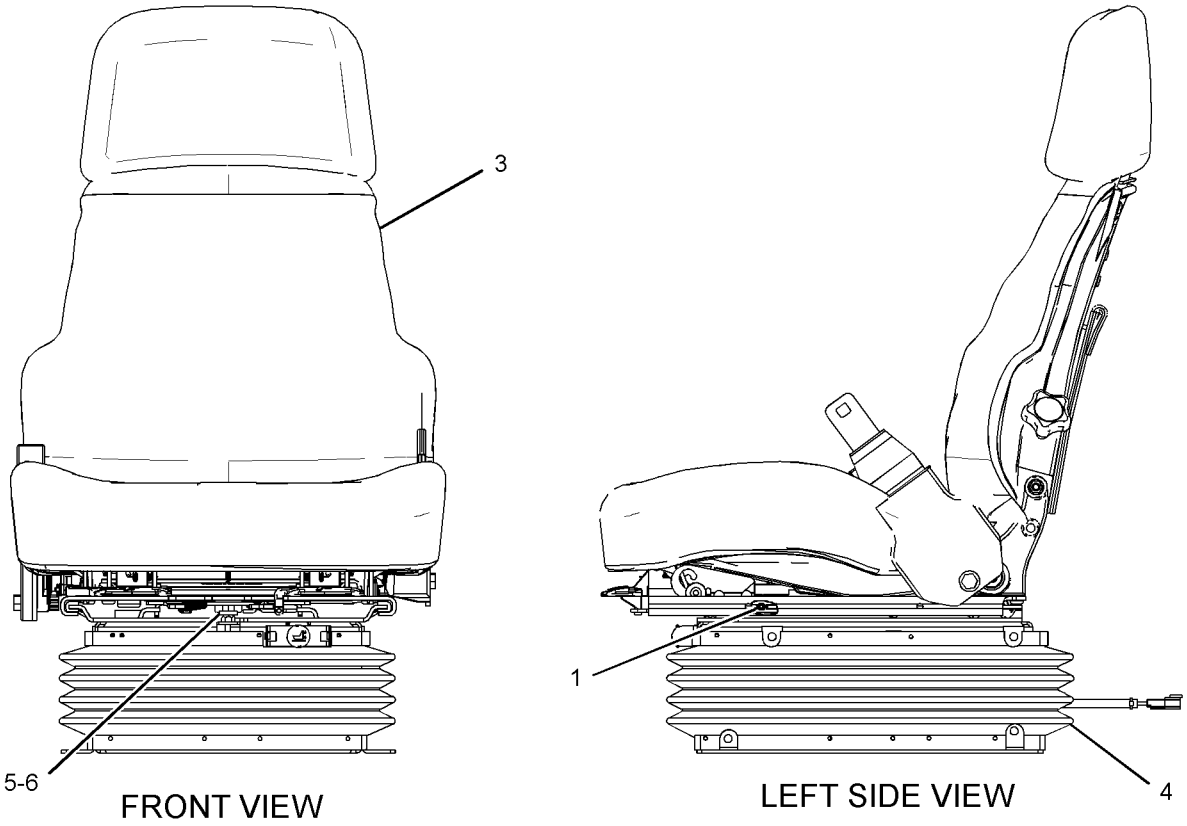

GRAPHIC #1 **<END>** g01608353

OPERATOR STATION

228-9624 SUPPORT GP-HYDRAULIC CONTROL

S/N: BXY1-3999

PART OF 227-3190, 292-6110, 308-2727 CAB AR

ALSO AN ATTACHMENT

SMCS-5258 **i03342618**

NOTE	REF NO	GRAPHIC REF	PART NUMBER	QTY	PART NAME 1 2 3 4 5 6 (PRODUCT LEVEL)	SEE PAGE
	1	2	**3K-4897**	1	PIN-SPRING	
	2	2	**4E-6523**	1	SUPPORT-SLIDE	
	3	1	**4E-6526**	1	CUSHION AS (RH)	
	4	1	**4E-8722**	4	NUT (RETAINER)	
	5	2	**4E-9173**	2	SHAFT-CONTROL	
	6	2	**4E-9174**	4	BEARING	
M	7	2	**6V-9327**	4	SETSCREW-SOCKET (M6X1-THD)	
	8	2	**7V-0445**	1	SPRING	
	9	1	**7X-3310**	1	KNOB-BALL	
	10	1	**8Y-5746**	1	ASHTRAY	
	11	1	**8Y-6333**	1	GASKET (ASHTRAY)	
	12	2	**9U-0952**	1	PIN	
	13	2	**9U-0953**	1	GUIDE	
	14	2	**9U-0954**	1	STUD	
	15	2	**9U-0955**	1	PIN	
	16	2	**9U-3925**	8	RING-RETAINING	
	17	2	**9U-3926**	6	STOP	
	18	2	**127-0323**	1	LEVER AS	
	19	2	**127-5480**	1	BRACKET AS	
M		2	**6V-9632**	1	NUT-WELD (M6X1-THD)	
	20	1	**170-0490**	1	HOUSING	
	21	1	**170-0976**	1	BRACKET AS	
	22	1	**170-0978**	1	BRACKET AS	
M		1	**6V-9632**	1	NUT-WELD (M6X1-THD)	
M		1	**8T-3490**	3	NUT-WELD (M10X1.5-THD)	
M		1	**8T-3612**	2	NUT-WELD (M8X1.25-THD)	
	23	2	**203-0328**	1	SPACER (16X19X9-MM THK)	
	24	1	**203-9991**	1	KNOB AS	
M		1	**9X-8281**	1	STUD-TAPERLOCK (M10X1.5X45-MM)	
	25	1	**211-4942**	2	KNOB AS	
	26	1	**239-9660**	1	HOUSING	
	27	2	**301-5154**	1	SLIDER	
M	28	1	**099-3649**	4	BOLT (M8X1.25X40-MM)	
M	29	1	**5C-7261**	4	NUT (M8X1.25-THD)	
	30	2	**7X-0575**	2	WASHER-HARD (10.2X22.5X5-MM THK)	
M	31	2	**8T-4138**	4	BOLT (M6X1X20-MM)	
M	32	2	**8T-4189**	2	BOLT (M8X1.25X20-MM)	
M	33	2	**8T-4195**	4	BOLT (M10X1.5X30-MM)	
	34	2	**8T-4205**	4	WASHER-HARD (7.2X14.5X2-MM THK)	
	35	1	**8T-4224**	7	WASHER-HARD (8.8X16X2-MM THK)	
	36	1	**9N-0869**	2	WASHER-HARD (8.8X25.5X2-MM THK)	
	37	2	**9X-2027**	1	WASHER (11X18X2-MM THK)	
	38	1	**9X-2038**	8	WASHER (7X19X2-MM THK)	
M	39	1	**9X-2044**	8	SCREW-TRUSS HEAD (M6X1X16-MM)	
M	40	1	**9X-2616**	2	SCREW-SOCKET (M8X1.25X16-MM)	
	41	1	**5P-8309**		SEAL (0.08-M)	

M-METRIC PART

228-9624 SUPPORT GP-HYDRAULIC CONTROL *(contd.)* i03342618

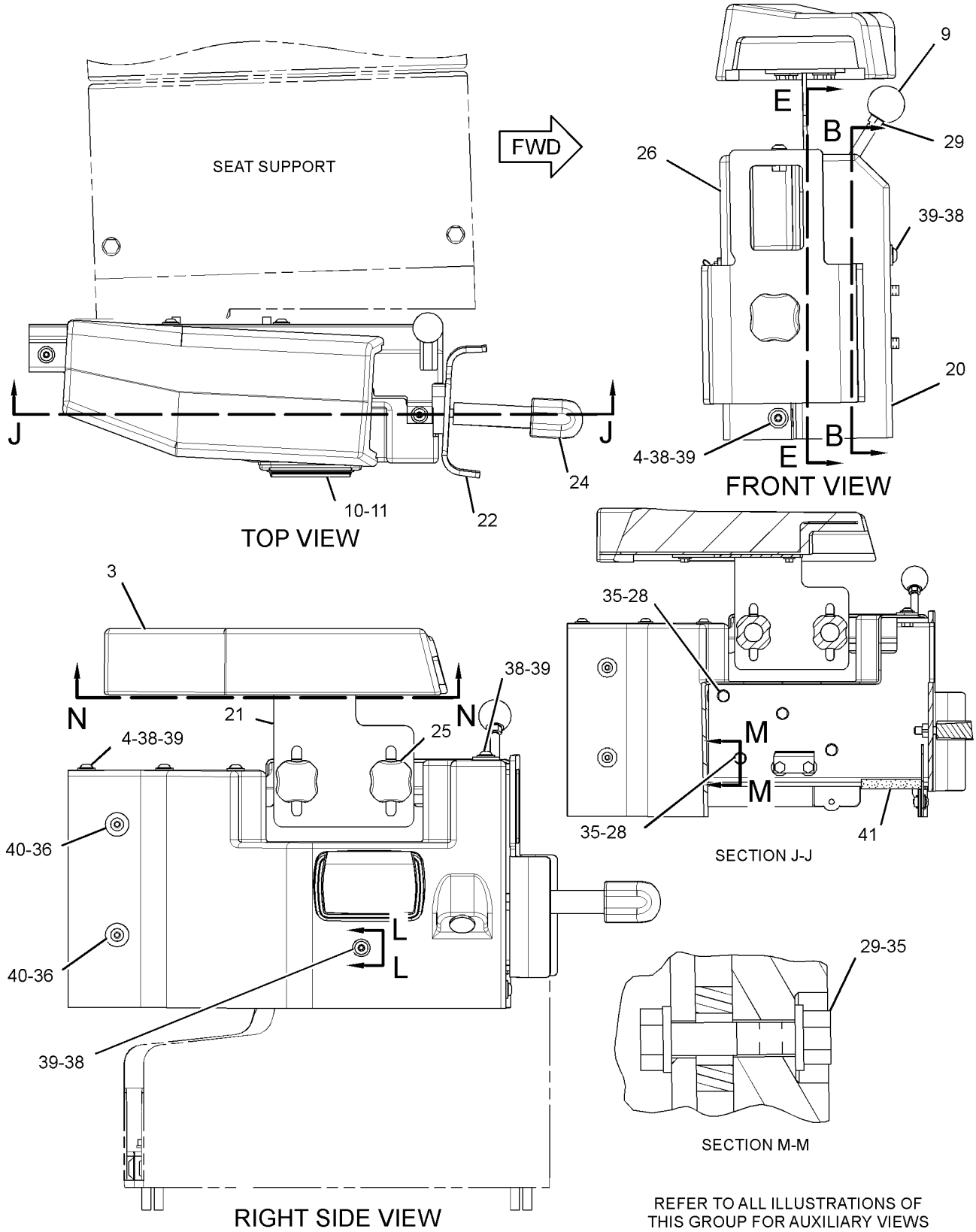

GRAPHIC #1 g01521623

228-9624 **SUPPORT GP-HYDRAULIC CONTROL** *(contd.)* **i03342618**

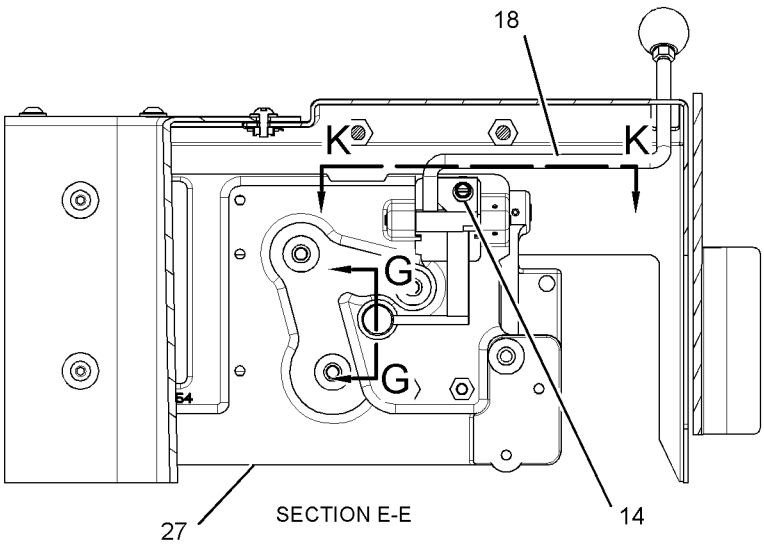

SECTION E-E

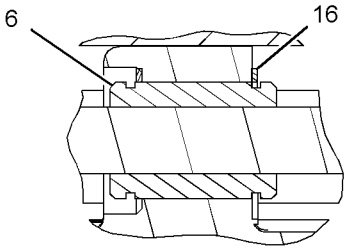

SECTION H-H

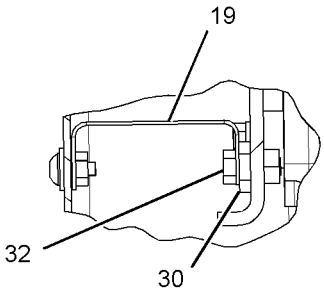

SECTION L-L

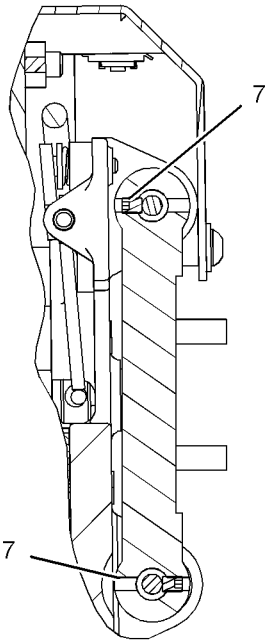

SECTION C-C

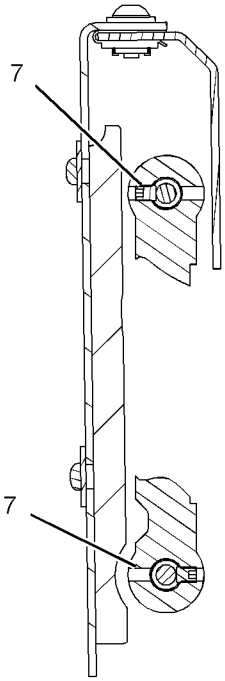

SECTION D-D

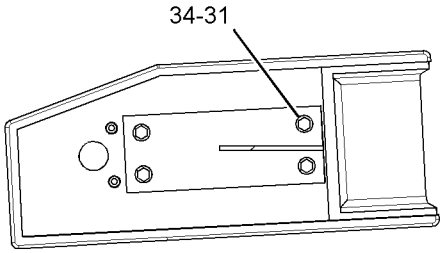

SECTION N-N

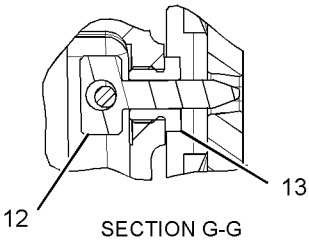

SECTION G-G

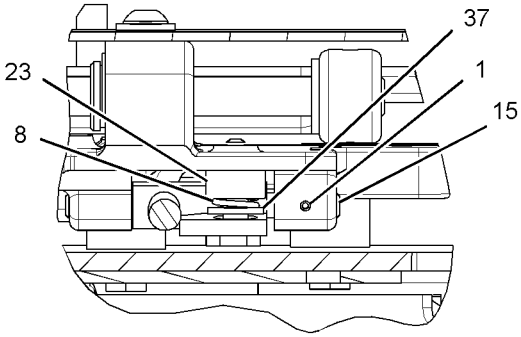

SECTION K-K

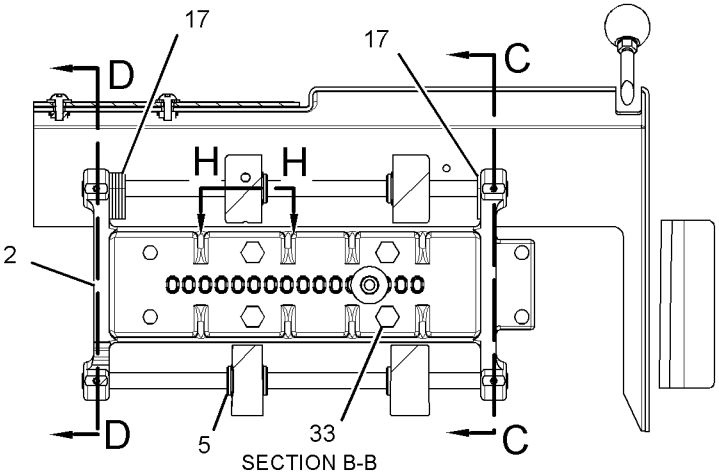

SECTION B-B

GRAPHIC #2 **<END>** g02051634

OPERATOR STATION

253-9969 SUPPORT GP-HYDRAULIC CONTROL

S/N: BXY1-UP

AN ATTACHMENT

SMCS-5258 **i02224622**

NOTE	REF NO	GRAPHIC REF	PART NUMBER	QTY	PART NAME 1 2 3 4 5 6 (PRODUCT LEVEL)	SEE PAGE
	1	1	**203-9991**	1	KNOB AS	
M		1	**9X-8281**	2	STUD-TAPERLOCK (M10X1.5X45-MM)	
	2	1	**253-9967**	1	BRACKET	
	3	1	**253-9968**	1	BRACKET AS	
	4	1	**254-2162**	1	NUT	
	5	1	**7X-7729**	1	WASHER (11X25X3-MM THK)	

M-METRIC PART

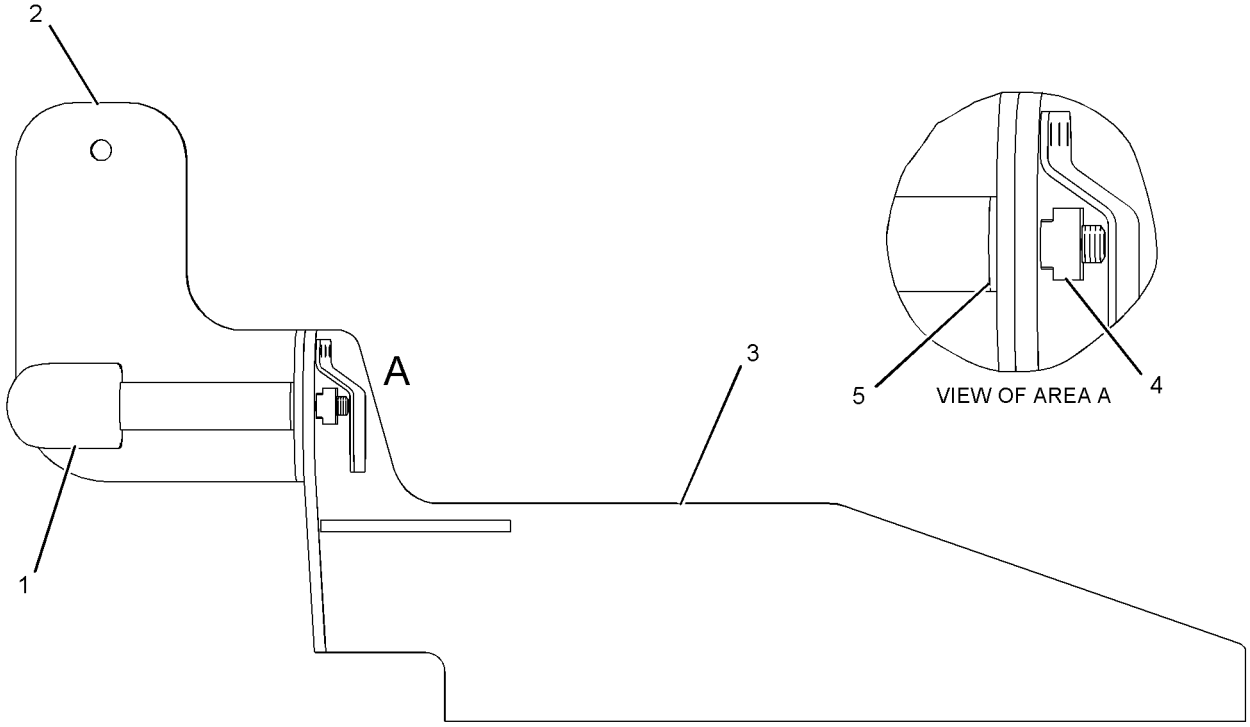

GRAPHIC #1 **<END>** g01128116

OPERATOR STATION

325-7180 SUPPORT GP-HYDRAULIC CONTROL

S/N: BXY4000-UP

PART OF 346-3826 CAB AR

SMCS-5258 **i03765164**

NOTE	REF NO	GRAPHIC REF	PART NUMBER	QTY	PART NAME 1 2 3 4 5 6 (PRODUCT LEVEL)	SEE PAGE
	1	2	**4E-6523**	1	SUPPORT-SLIDE	
	2	1,2	**4E-8722**	2	NUT (RETAINER)	
	3	2	**4E-9173**	2	SHAFT-CONTROL	
	4	2	**4E-9174**	4	BEARING	
	5	2	**7V-0445**	1	SPRING	
	6	1	**7X-3310**	1	KNOB-BALL	
	7	1	**8Y-5746**	1	ASHTRAY	
	8	1	**8Y-6333**	1	GASKET (ASHTRAY)	
	9	2	**9U-0952**	1	PIN	
	10	2	**9U-0953**	1	GUIDE	
	11	2	**9U-0954**	1	STUD	
	12	2	**9U-0955**	1	PIN	
	13	2	**9U-3925**	8	RING-RETAINING	
	14	2	**9U-3926**	7	STOP	
	15	2	**174-4301**	1	LEVER AS	
	16	1	**198-8769**	1	CONSOLE AS	
	17	2	**200-0728**	1	BRACKET	
	18	2	**200-0729**	1	BRACKET	
	19	2	**203-0328**	1	SPACER (16X19X9-MM THK)	
	20	1	**203-9991**	3	KNOB AS	
					(EACH INCLUDES)	
		1	**8T-0277**	1	PIN-SPRING	
M		1	**9X-8281**	1	STUD-TAPERLOCK (M10X1.5X45-MM)	
	21	1	**205-8212**	1	CUSHION AS	
	22	1	**210-6783**	1	BRACKET AS	
	23	2	**253-0575**	1	BRACKET AS	
	24	1	**254-9146**	1	CUSHION AS	
	25	1	**254-9147**	1	CUSHION AS	
	26	2	**301-5154**	1	SLIDER	
	27	1	**348-8181**	1	COVER	
M	28	2	**099-3649**	4	BOLT (M8X1.25X40-MM)	
	29	2	**3K-4897**	1	PIN-SPRING	
M	30	1,2	**5C-7261**	4	NUT (M8X1.25-THD)	
M	31	2	**6V-9327**	4	SETSCREW-SOCKET (M6X1-THD)	
M	32	2	**8T-4136**	4	BOLT (M10X1.5X25-MM)	
M	33	1	**8T-4138**	11	BOLT (M6X1X20-MM)	
	34	1	**8T-4205**	11	WASHER-HARD (7.2X14.5X2-MM THK)	
	35	1,2	**8T-4224**	9	WASHER-HARD (8.8X16X2-MM THK)	
	36	2	**9X-2027**	1	WASHER (11X18X2-MM THK)	
	37	1,2	**9X-2038**	9	WASHER (7X19X2-MM THK)	
M	38	1,2	**9X-2044**	9	SCREW-TRUSS HEAD (M6X1X16-MM)	
M	39	1,2	**9X-2616**	2	SCREW-SOCKET (M8X1.25X16-MM)	

M-METRIC PART

325-7180 **SUPPORT GP-HYDRAULIC CONTROL** *(contd.)* **i03765164**

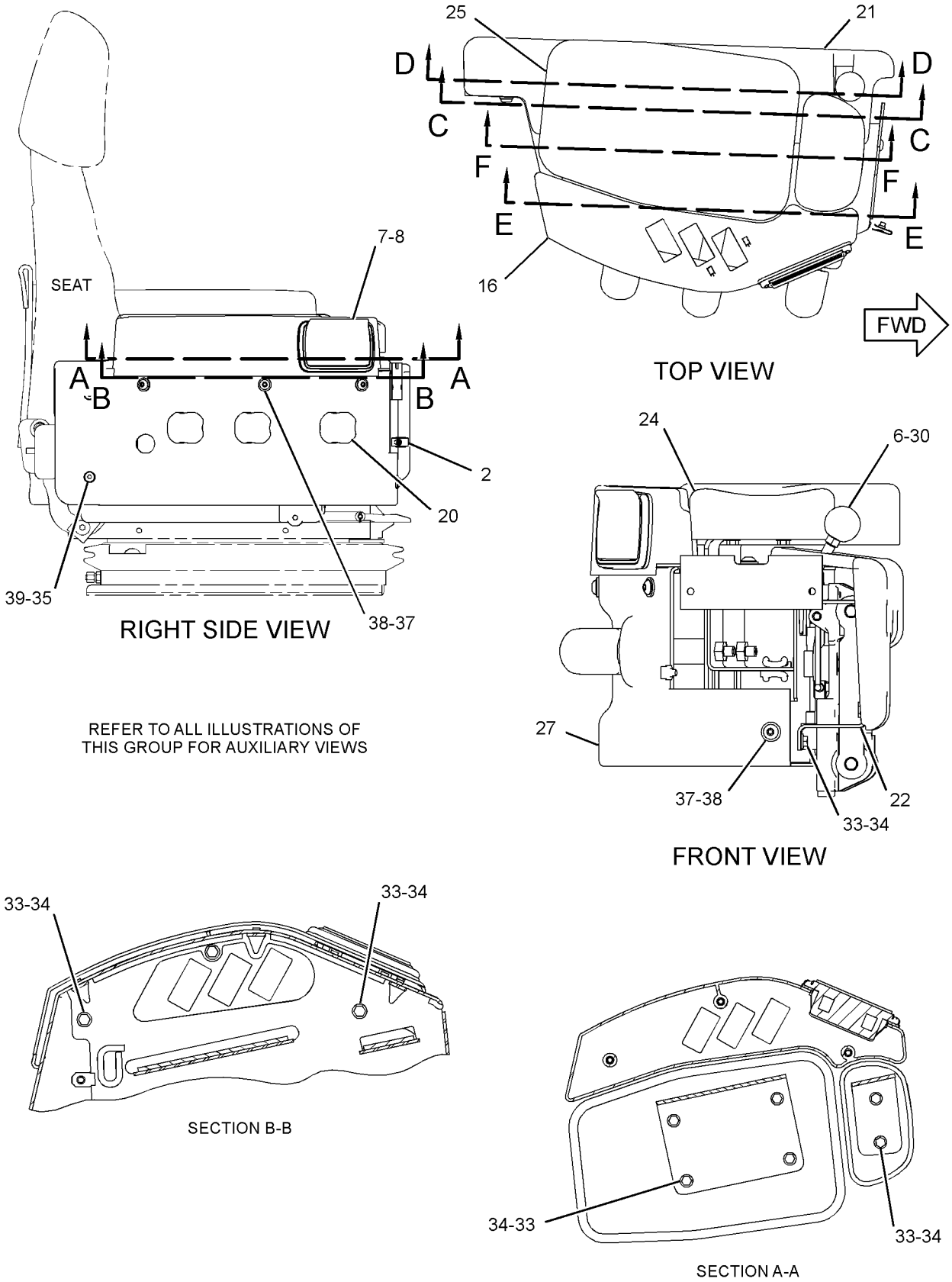

GRAPHIC #1 g02065354

325-7180 **SUPPORT GP-HYDRAULIC CONTROL** *(contd.)* **i03765164**

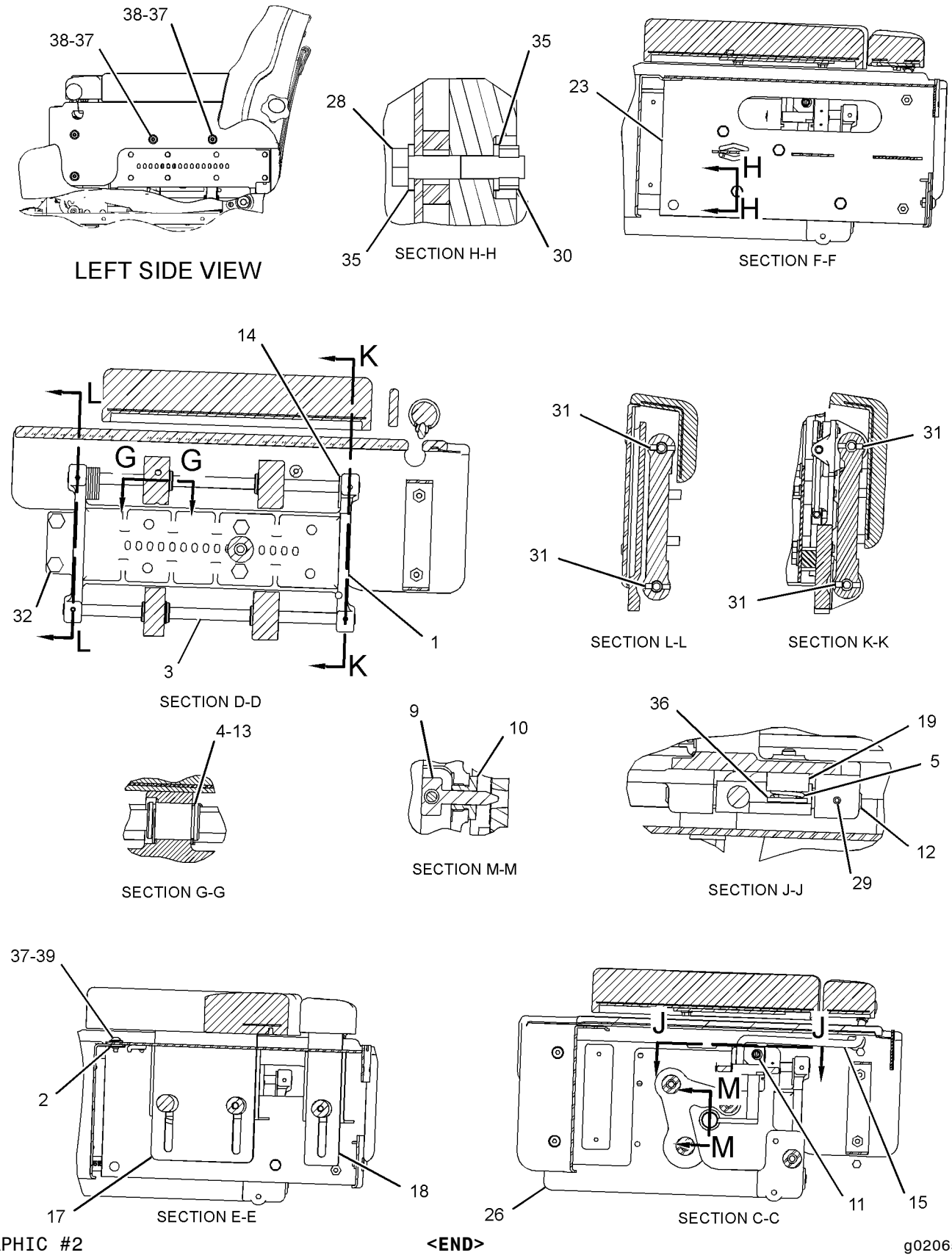

GRAPHIC #2 **<END>** g02065355

OPERATOR STATION

173-1905 SUPPORT GP-SEAT

S/N: BXY1-3999
PART OF 227-3190, 292-6110, 308-2727 CAB AR
ALSO AN ATTACHMENT

SMCS-7321 **i02677509**

NOTE	REF NO	GRAPHIC REF	PART NUMBER	QTY	PART NAME 1 2 3 4 5 6 (PRODUCT LEVEL)	SEE PAGE
	1	1	**171-9679**	1	BRACKET AS (RH)	
	2	1	**171-9683**	1	BRACKET AS (LH)	
M	3	1	**168-4510**	4	BOLT (M10X1.5X70-MM)	
	4	1	**8T-4121**	4	WASHER-HARD (11X21X2.5-MM THK)	
	5	1	**4P-7581**	1	CLIP	

M-METRIC PART

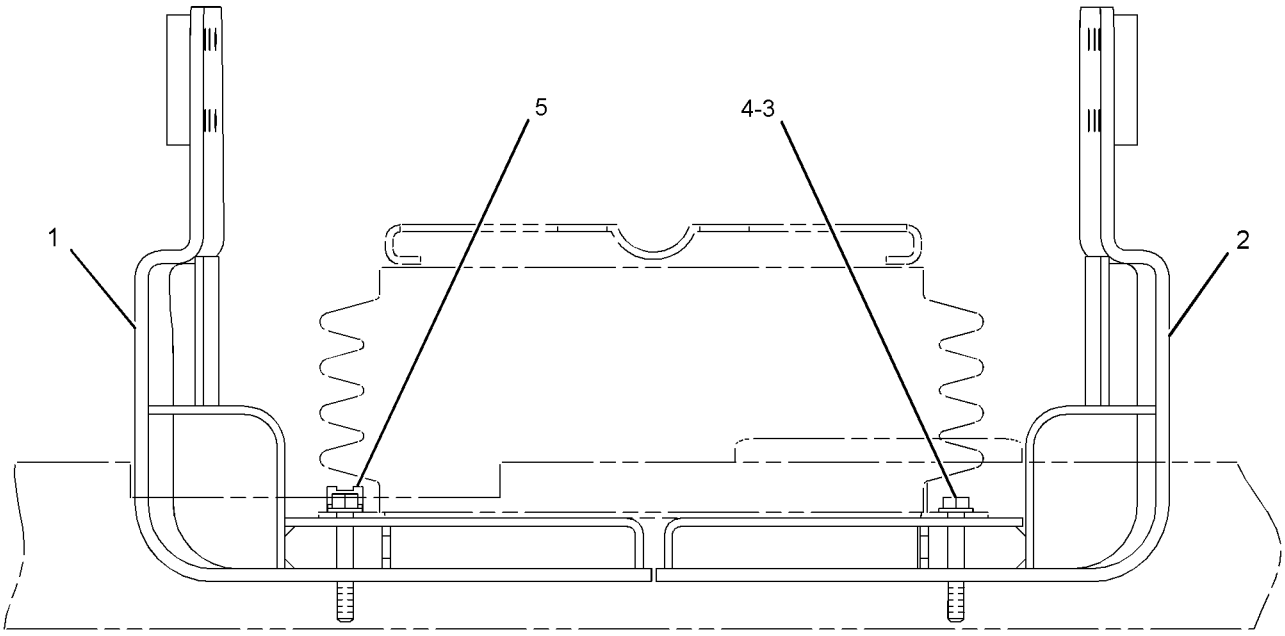

FRONT VIEW

GRAPHIC #1 **<END>** g01354341

OPERATOR STATION

326-3198 SUPPORT GP-SEAT

S/N: BXY4000-UP

PART OF 346-3826 CAB AR

SMCS-7321 **i03765192**

NOTE	REF NO	GRAPHIC REF	PART NUMBER	QTY	PART NAME 1 2 3 4 5 6 (PRODUCT LEVEL)	SEE PAGE
	1	1	**171-9683**	1	BRACKET AS (LH)	
	2	1	**326-3205**	1	BRACKET AS (RH)	
M	3	1	**168-4510**	4	BOLT (M10X1.5X70-MM)	
	4	1	**4P-7581**	1	CLIP	
	5	1	**8T-4121**	4	WASHER-HARD (11X21X2.5-MM THK)	

M-METRIC PART

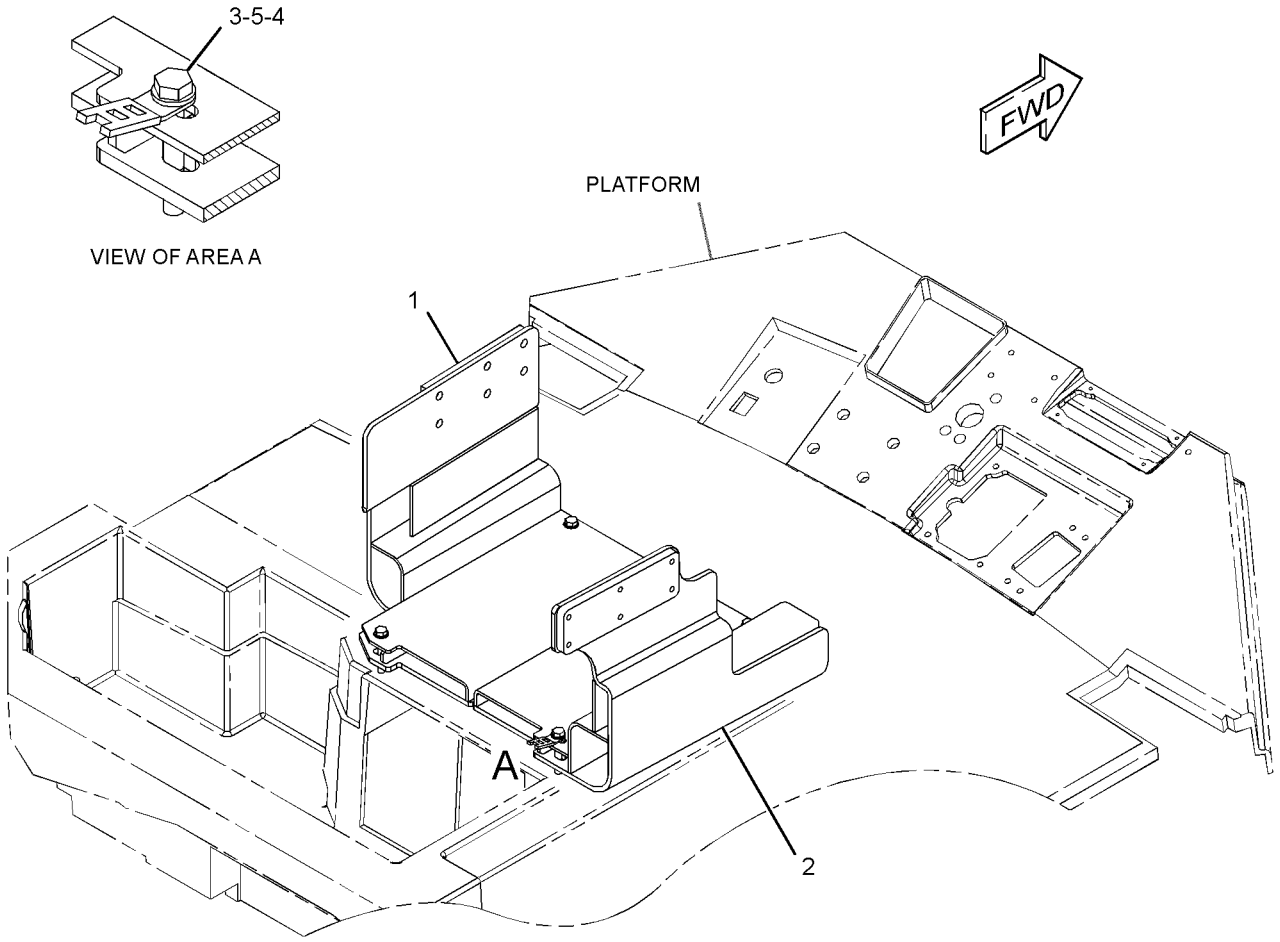

GRAPHIC #1 **<END>** g02064213

OPERATOR STATION

171-3897 SUPPORT GP-STEERING CONTROL

S/N: BXY1-UP

PART OF 227-3190, 292-6110, 308-2727, 346-3826 CAB AR

ALSO AN ATTACHMENT

SMCS-5258 **i03413840**

NOTE	REF NO	GRAPHIC REF	PART NUMBER	QTY	PART NAME 1 2 3 4 5 6 (PRODUCT LEVEL)	SEE PAGE
	1	2	**3G-4711**	1	SPRING	
B	2	2	**4B-4276**	8	WASHER (7X16X1.6-MM THK)	
	3	1	**4E-6335**	1	CUSHION AS (LH)	
	4	2	**4E-6439**	1	LEVER AS	
	5	2	**4E-6444**	1	ROD	
	6	2	**4E-6445**	1	PIN	
	7	2	**4E-6446**	1	GUIDE	
	8	2	**4E-6523**	1	SUPPORT-SLIDE	
	9	2	**4E-7163**	1	SLIDER	
	10	1	**4E-8722**	5	NUT (RETAINER)	
	11	2	**4E-9173**	2	SHAFT-CONTROL	
	12	2	**4E-9174**	2	BEARING	
	13	2	**6E-0923**	1	SPACER (7.04X9.52X15.2-MM THK)	
	14	2	**9U-3925**	4	RING-RETAINING	
	15	2	**9U-3926**	6	STOP	
	16	2	**9U-3927**	1	BEARING	
B	17	2	**137-6841**	2	SHIM (0.2-MM THK)	
	18	1	**166-4731**	1	HOUSING	
	19	1	**166-4732**	1	HOUSING	
	20	1	**170-0696**	1	BRACKET AS	
M	20A	1	**6V-9632**	2	NUT-WELD (M6X1-THD)	
	21	1	**170-0971**	1	CUSHION AS	
	22	1	**170-0977**	1	BRACKET AS	
	23	2	**327-5450**	1	PLATE AS	
	24	1	**211-4942**	2	KNOB AS	
	25	1	**170-8540**	1	BRACKET AS	
M	25A	1	**6V-9632**	2	NUT-WELD (M6X1-THD)	
	26	2	**013-8502**	1	LOCKWASHER	
M	27	2	**095-0758**	1	SCREW-MACHINE (M6X1X14-MM)	
M	28	2	**098-5747**	1	NUT (M16X2-THD)	
	29	2	**1J-5799**	1	PIN-SPRING	
M	30	1	**5C-7261**	1	NUT (M8X1.25-THD)	
M	31	2	**6V-9327**	4	SETSCREW-SOCKET (M6X1-THD)	
M	32	2	**7X-2534**	1	BOLT (M6X1X50-MM)	
	33	1	**7X-3310**	1	KNOB-BALL	
M	34	2	**8T-4134**	1	NUT (M6X1-THD)	
M	35	1	**8T-4138**	4	BOLT (M6X1X20-MM)	
M	36	1	**8T-4189**	2	BOLT (M8X1.25X20-MM)	
M	37	2	**8T-4195**	6	BOLT (M10X1.5X30-MM)	
M	38	2	**8T-4200**	2	BOLT (M8X1.25X16-MM)	
	39	1	**8T-4205**	4	WASHER-HARD (7.2X14.5X2-MM THK)	
	40	1,2	**8T-4224**	4	WASHER-HARD (8.8X16X2-MM THK)	
M	41	2	**8T-4244**	1	NUT (M12X1.75-THD)	
	42	1	**9X-2038**	11	WASHER (7X19X2-MM THK)	
M	43	1	**9X-2043**	11	SCREW-TRUSS HEAD (M6X1X14-MM)	

B-USE AS REQUIRED
M-METRIC PART

171-3897 **SUPPORT GP-STEERING CONTROL** *(contd.)* **i03413840**

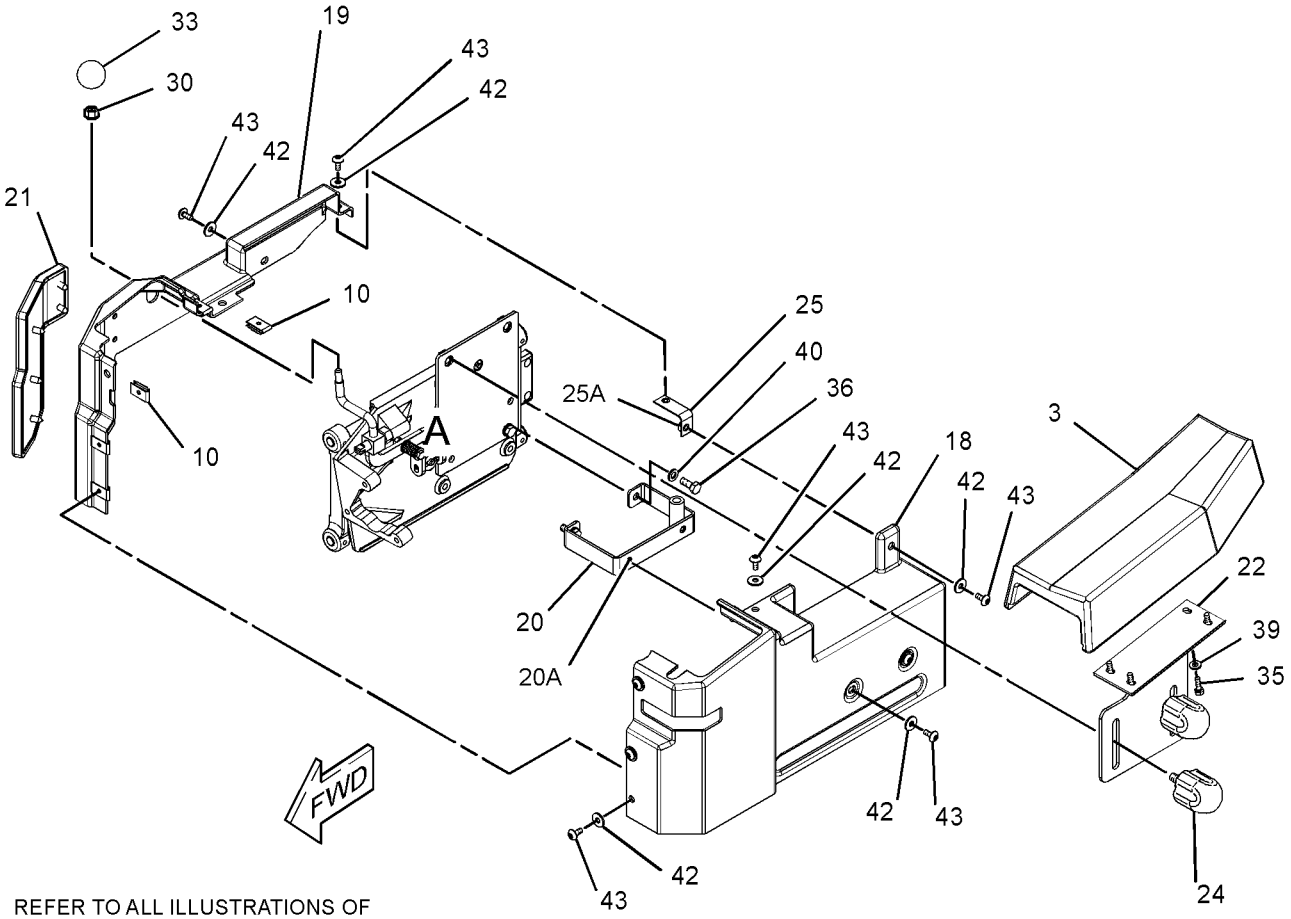

REFER TO ALL ILLUSTRATIONS OF
THIS GROUP FOR AUXILIARY VIEWS

GRAPHIC #1 g01705073

171-3897 **SUPPORT GP-STEERING CONTROL** *(contd.)* **i03413840**

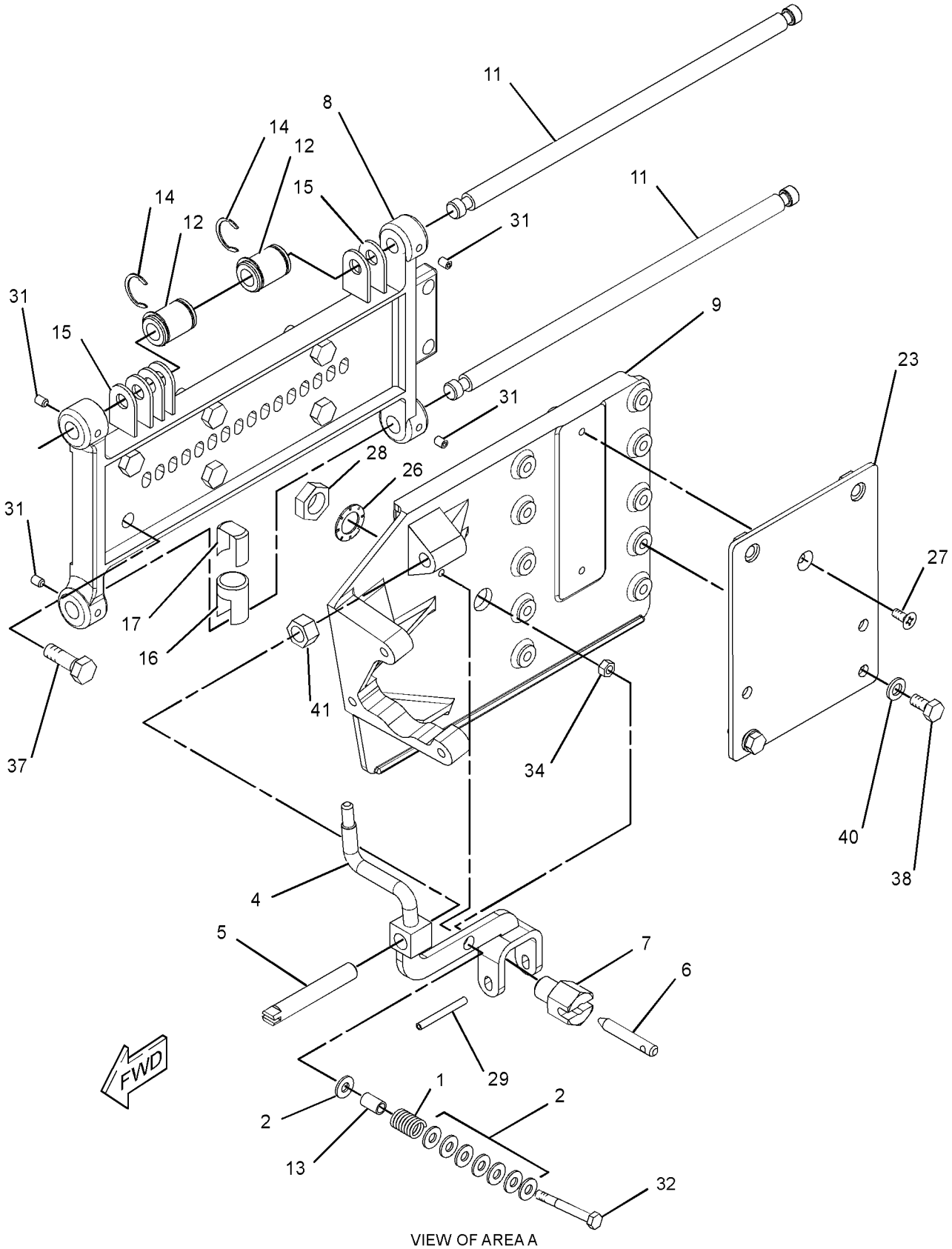

VIEW OF AREA A

GRAPHIC #2 **<END>** g01705074

OPERATOR STATION

173-9375 SUPPRESSION GP-CAB SOUND

S/N: BXY1-UP

PART OF 227-3190, 292-6110, 308-2727, 346-3826 CAB AR

ALSO AN ATTACHMENT

SMCS-7329 **i03516523**

NOTE	REF NO	GRAPHIC REF	PART NUMBER	QTY	PART NAME 1 2 3 4 5 6 (PRODUCT LEVEL)	SEE PAGE
	1	1	**168-9980**	1	PLATE	
	2	1	**173-9376**	1	INSULATION AS	
	3	1	**183-1989**	1	PLATE	
	4	1	**174-3055**	2	PLATE AS	
					(EACH INCLUDES)	
		1	**7T-1099**	3	LINK	
	5	1	**313-4573**	2	PLATE AS	
					(EACH INCLUDES)	
		1	**7T-1099**	1	LINK	
M	6	1	**8T-0722**	14	BOLT-LOCKING (M10X1.5X30-MM)	
	7	1	**8T-4121**	14	WASHER-HARD (11X21X2.5-MM THK)	

M-METRIC PART

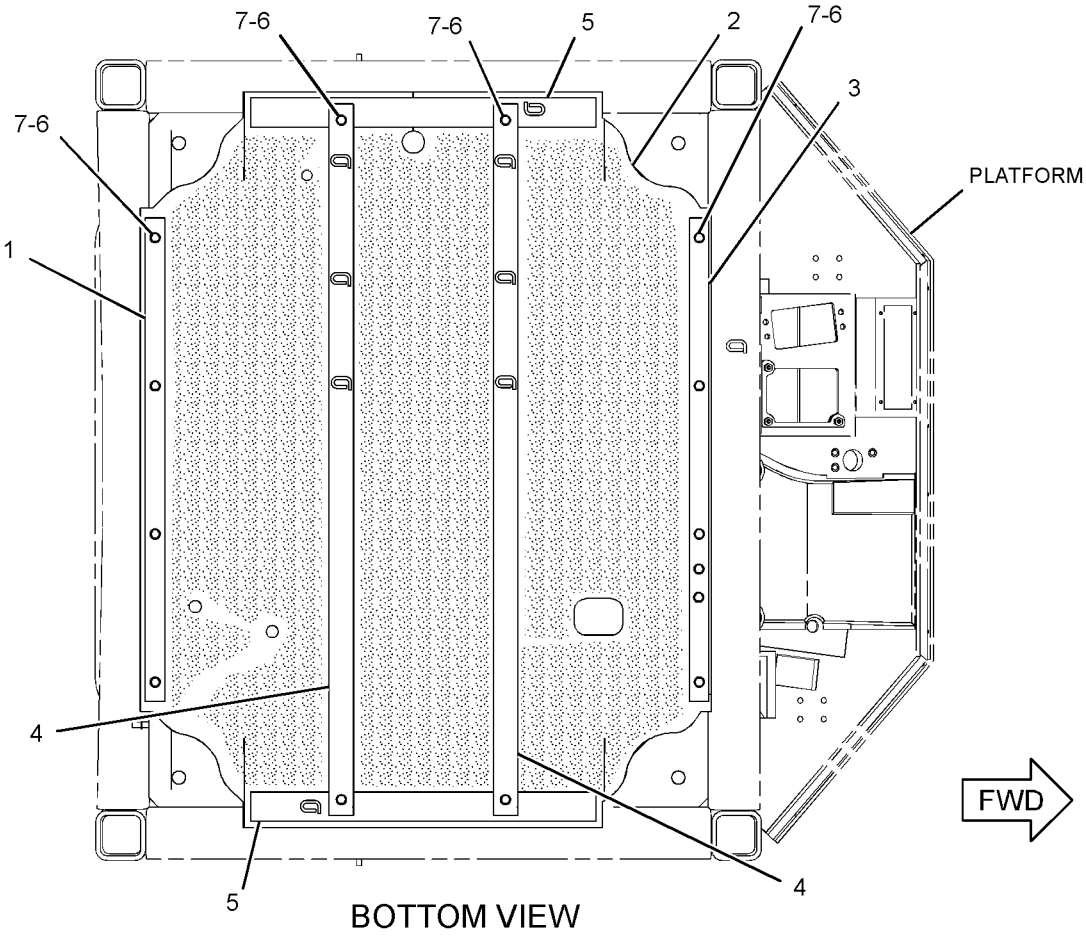

GRAPHIC #1 **<END>** g01951115

OPERATOR STATION

191-2933 SUSPENSION GP-SEAT—AIR

S/N: BXY1-UP
PART OF 200-3174, 354-7387 SEAT GP-SUSPENSION
ALSO AN ATTACHMENT

SMCS-7324 **i03794031**

NOTE	REF NO	GRAPHIC REF	PART NUMBER	QTY	PART NAME 1 2 3 4 5 6 (PRODUCT LEVEL)	SEE PAGE
	1	1	**3P-9900**	5	WASHER (10.5X30X3-MM THK)	
	2	1	**4B-4278**	2	WASHER (10.2X20.5X1.6-MM THK)	
	3	1	**4V-8577**	12	BEARING	
	4	1	**8L-8413**	1	STRAP-CABLE	
	5	1	**145-0326**	1	FILM-INSTRUCTION (SEAT ADJUSTMENT)	
	6	1	**164-1234**	1	PLATE	
	7	1	**101-0003**	26	FASTENER	
	8	1	**169-7380**	1	BOLT-SOCKET HEAD (3/8-16X0.375-IN)	
	9	1	**186-5107**	2	SCREW-DRIVE (8-16X1.25-IN)	
	10	1	**192-7752**	4	SHAFT AS	
	11	1	**192-7755**	1	HOUSING AS (LOWER)	
	12	1	**314-5274**	1	SHAFT	
	13	1	**192-7767**	1	SCISSORS AS	
	14	1	**192-7783**	1	TOGGLE AS (WIDE)	
	15	1	**192-7787**	1	TOGGLE AS (NARROW)	
	16	1	**192-7790**	1	HOUSING AS (UPPER)	
	17	1	**192-7795**	1	BOOT	
	18	1	**192-7805**	1	HARNESS AS-VALVE (SEAT AIR COMPRESSOR)	
		1	**8T-8729**	2	PIN-CONNECTOR (16-GA TO 18-GA)	
		1	**102-8802**	1	KIT-RECEPTACLE (2-PIN)	
					(INCLUDES RECEPTACLE AS & WEDGE)	
E		1	**211-5358**		CONDUIT-FLEXIBLE (64-CM)	
	19	1	**192-7810**	1	SPRING AS-AIR	
		1	**5P-4423**	1	ELBOW	
		1	**163-1135**	1	SPRING	
	20	1	**192-7812**	1	BOLT-SPECIAL	
	21	1	**192-7820**	3	BUMPER	
	22	1	**314-5275**	1	SHAFT	
	23	1	**237-3943**	1	BRACKET	
Y	24	1	**237-3970**	1	AIR COMPRESSOR GP-SEAT	1693
	25	1	**108-4311**	1	SCREW-MACHINE (3/8-16X0.75-IN)	
	26	1	**2K-4973**	8	LOCKNUT (3/8-16-THD)	
	27	1	**3J-4818**	1	LOCKWASHER	
M	28	1	**5C-2890**	3	NUT (M6X1-THD)	
	29	1	**8T-9371**	1	BOLT (3/8-16X0.5-IN)	
E	30	1	**211-5358**		CONDUIT-FLEXIBLE (26.7-CM)	
E	30A	1	**211-5358**		CONDUIT-FLEXIBLE (35.6-CM)	
D	31	1	**5P-6010**		TUBE (0.27-M)	
D	31A	1	**5P-6010**		TUBE (0.36-M)	
					AVAILABLE REPAIR KIT(S):	
			192-7799	1	KIT-AIR VALVE (SUSPENSION SEAT)	
					(INCLUDES KNOB AS, NUT, VALVE, LOCKWASHER & FITTING)	
			192-7848	1	KIT-SHOCK ABSORBER (SUSPENSION SEAT)	
					(INCLUDES LOCKNUT, LOCKWASHER, SHOCK ABSORBER, BEARINGS, WASHER & BOLTS)	
			211-9294	1	KIT-TETHER (SUSPENSION SEAT)	
					(INCLUDES TETHERS)	

D-ORDER BY THE METER
E-ORDER BY THE CENTIMETER
M-METRIC PART
Y-SEPARATE ILLUSTRATION

191-2933 SUSPENSION GP-SEAT *(contd.)* i03794031

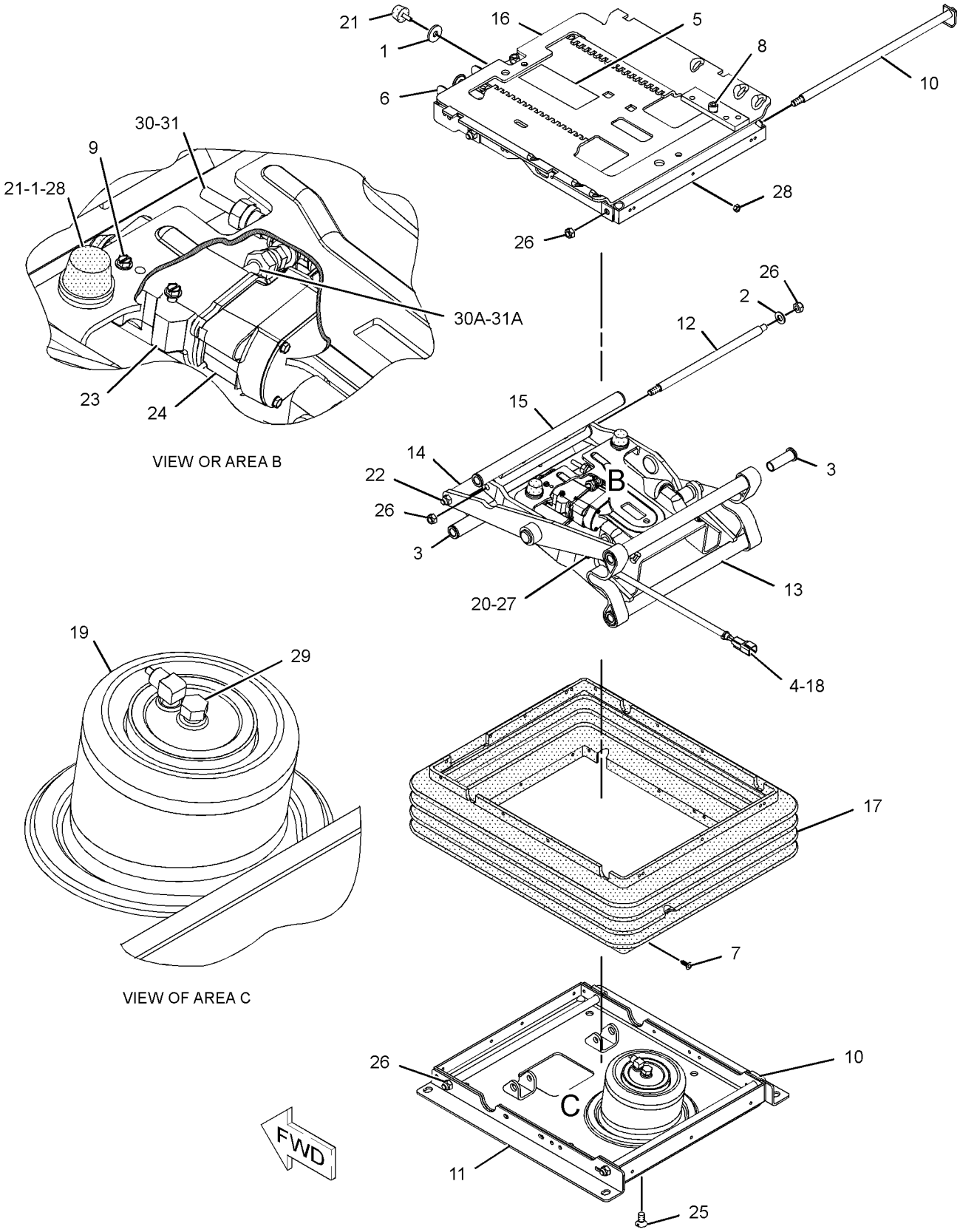

GRAPHIC #1 **<END>** g01197079

OPERATOR STATION

325-0195 VISOR GP-CAB

S/N: BXY1-UP

AN ATTACHMENT

SMCS-7301 **i03374009**

NOTE	REF NO	GRAPHIC REF	PART NUMBER	QTY	PART NAME 1 2 3 4 5 6 (PRODUCT LEVEL)	SEE PAGE
M	1	1	**111-4627**	2	SCREW-MACHINE (M6X1X30-MM)	
	2	1	**123-4371**	1	VISOR AS	
		1	**244-6908**	2	BRACKET	

M-METRIC PART

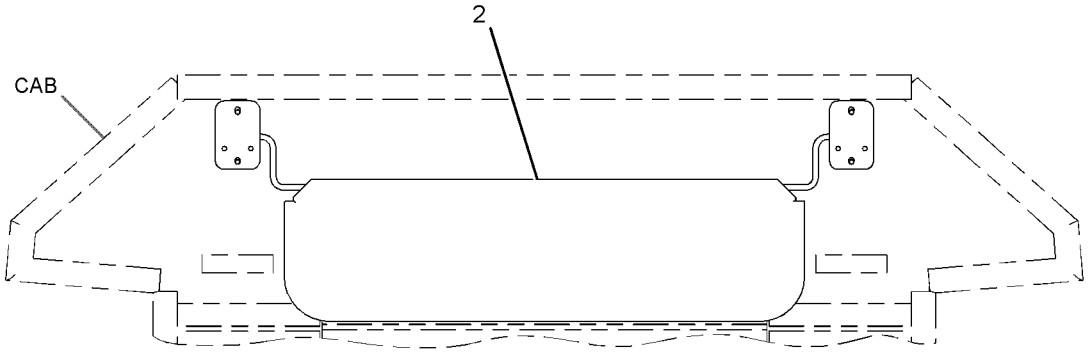

FRONT VIEW

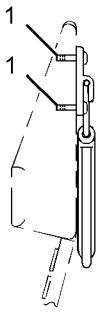

LEFT SIDE VIEW

GRAPHIC #1 **<END>** g01708213

OPERATOR STATION

114-5127 WASHER GP-WINDOW

S/N: BXY1-UP

PART OF 225-5432, 284-2735 CHASSIS AR

SMCS-7306 **i03627037**

NOTE	REF NO	GRAPHIC REF	PART NUMBER	QTY	PART NAME 1 2 3 4 5 6 (PRODUCT LEVEL)	SEE PAGE
D	1	1	**6V-2496**		SEAL (0.15-M EACH)	
	2	1	**5G-7398**	1	TANK AS-WINDOW WASHER	
		1	**3W-6398**	1	CAP	
		1	**3W-6399**	1	PACKING	
		1	**7T-8890**	2	PUMP AS-WASHER	
		1	**8T-5913**	2	SCREEN-FILTER (WINDOW WASHER)	
		1	**8T-5914**	2	GROMMET	
	3	1	**201-4221**	1	STRIP AS	
	4	1	**201-4222**	1	STRIP	
	5	1	**7X-7729**	3	WASHER (11X25X3-MM THK)	
M	6	1	**8T-4137**	1	BOLT (M10X1.5X20-MM)	
M	7	1	**8T-4195**	2	BOLT (M10X1.5X30-MM)	
	8	1	**7S-4244**	1	CLIP	

D-ORDER BY THE METER
M-METRIC PART

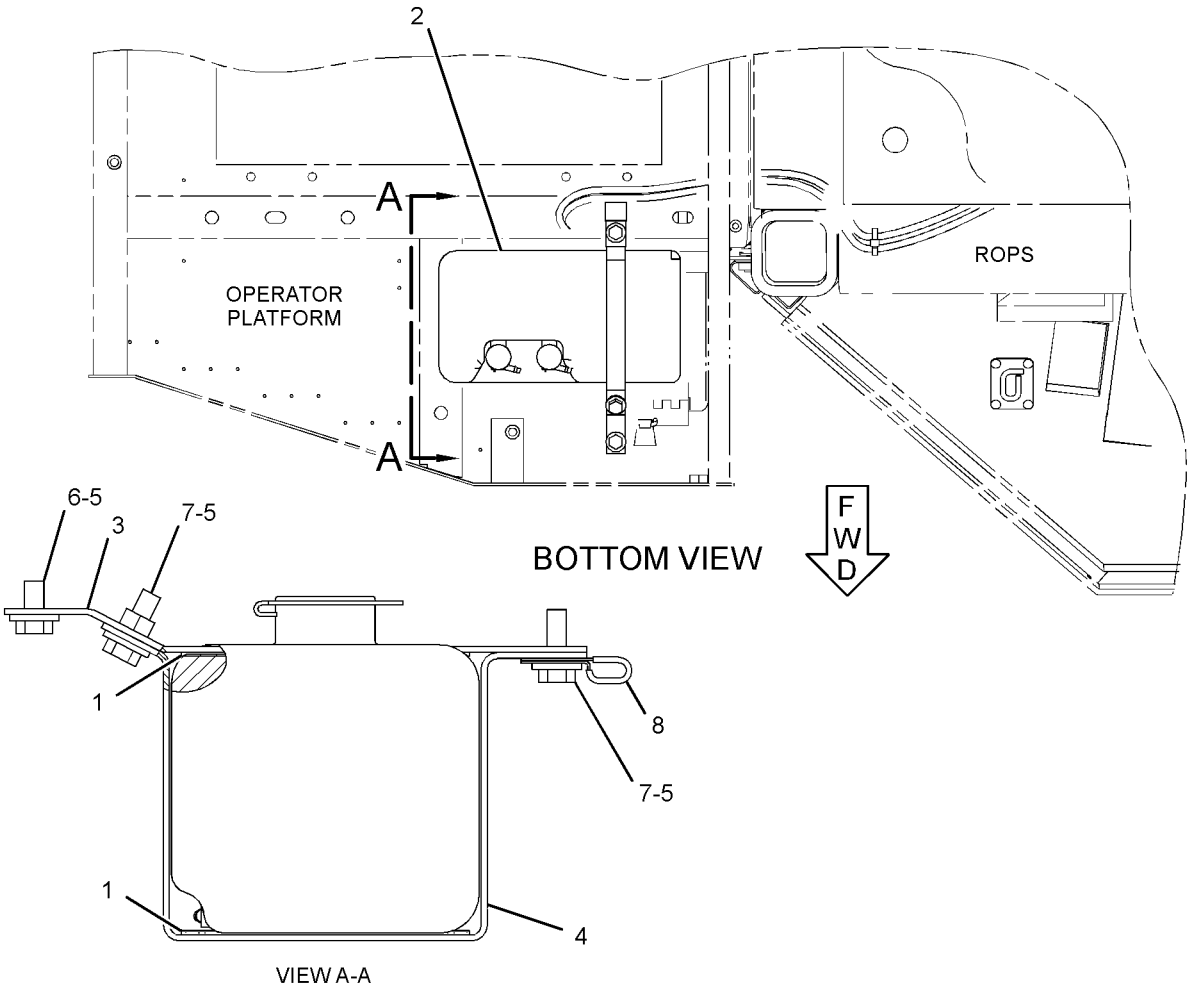

GRAPHIC #1 **<END>** g02051673

OPERATOR STATION

113-2512 WINDOW GP-DOOR—LH

S/N: BXY1900-UP
PART OF 227-3270 DOOR GP-CAB
AN ATTACHMENT

SMCS-7308, 7310 **i03623760**

NOTE	REF NO	GRAPHIC REF	PART NUMBER	QTY	PART NAME 1 2 3 4 5 6 (PRODUCT LEVEL)	SEE PAGE
C	1	1	**8C-6738**	2	SCREW-PAN HEAD (6-20X1-IN)	
C	2	1	**334-8328**	1	CATCH AS (UPPER, LH)	
		1	**150-8015**	1	GASKET	
C	3	1	**334-8329**	1	CATCH AS (UPPER, RH)	
		1	**150-8015**	1	GASKET	
C	4	1	**207-0533**	1	GLASS	
C	5	1	**207-0534**	1	GLASS	
C	6	1	**207-0535**	1	FRAME AS	
C	7	1	**207-0547**	1	STRIP AS	
C	8	1	**286-9380**	1	KIT-SEAL	
					(INCLUDES GLAZING SEALS & STOP)	

C-CHANGE FROM PREVIOUS TYPE

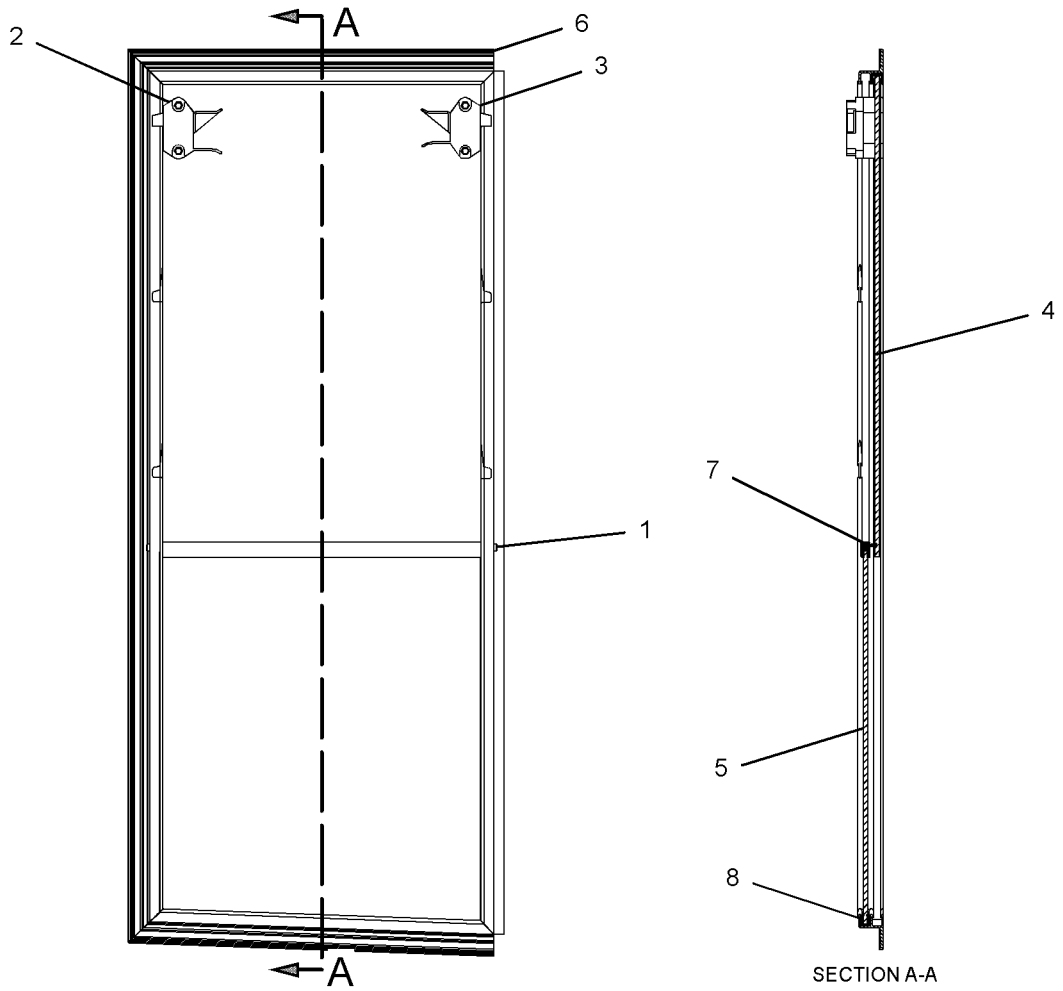

GRAPHIC #1 **<END>** g01284267

OPERATOR STATION

113-2513 WINDOW GP-DOOR–RH

S/N: BXY1900-UP
PART OF 308-2712 DOOR GP-CAB
AN ATTACHMENT

SMCS-7308, 7310 **i03606585**

NOTE	REF NO	GRAPHIC REF	PART NUMBER	QTY	PART NAME 1 2 3 4 5 6 (PRODUCT LEVEL)	SEE PAGE
C	1	1	**8C-6738**	2	SCREW-PAN HEAD (6-20X1-IN)	
C	2	1	**334-8328**	1	CATCH AS	
		1	**150-8015**	1	GASKET	
C	3	1	**334-8329**	1	CATCH AS	
		1	**150-8015**	1	GASKET	
C	4	1	**207-0533**	1	GLASS	
C	5	1	**207-0534**	1	GLASS	
C	6	1	**207-0547**	1	STRIP AS	
C	7	1	**208-5150**	1	FRAME AS	
C	8	1	**286-9380**	2	KIT-SEAL	
					(EACH INCLUDES)	
D		1	**9X-2532**		SEAL (1-M)	
D		1	**9X-2533**		STOP (1-M)	
E		1	**137-2170**		SEAL (275-CM)	
E		1	**208-5022**		SEAL (150-CM)	

C-CHANGE FROM PREVIOUS TYPE
D-ORDER BY THE METER
E-ORDER BY THE CENTIMETER

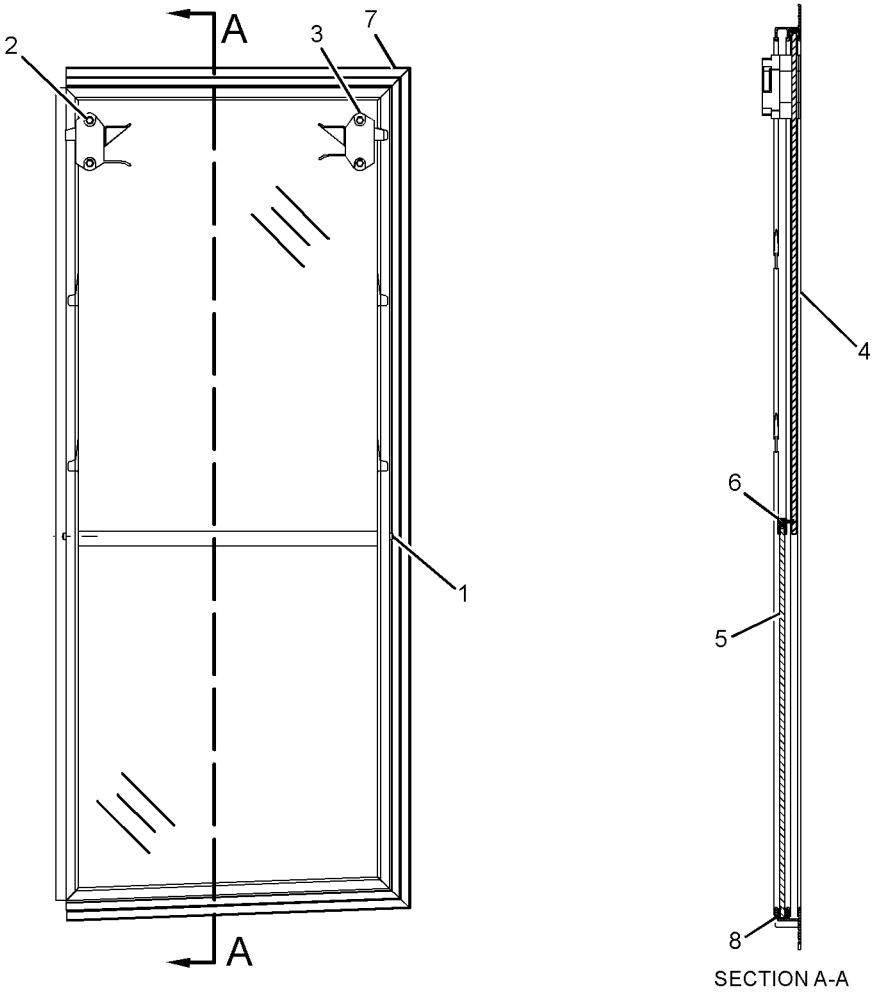

GRAPHIC #1 **<END>** g01286521

OPERATOR STATION

109-8196 WIPER GP-WINDOW

S/N: BXY1-201

PART OF 227-3190 CAB AR

SMCS-7305 **i02387234**

NOTE	REF NO	GRAPHIC REF	PART NUMBER	QTY	PART NAME 1 2 3 4 5 6 (PRODUCT LEVEL)	SEE PAGE
	1	2	**3S-2093**	4	STRAP-CABLE	
	2	1	**5P-9297**	1	CLIP	
	3	1	**6V-6210**	1	GASKET-SHAFT	
M	4	1,2	**6V-6889**	4	NUT (M8X1.25-THD)	
	5	1,2	**6V-7419**	2	BLADE AS-WIPER (700-MM)	
	6	1,2	**8T-5400**	4	CONNECTOR AS	
	7	1	**124-3637**	1	PLATE-WIPER	
CY	8	2	**214-7635**	1	ARM GP-WINDOW WIPER (FRONT)	1701
CY	9	1	**214-7634**	1	ARM GP-WINDOW WIPER (REAR)	1700
Y	10	1	**155-5789**	1	MOTOR GP-WINDOW WIPER (REAR)	1809
Y	11	1	**155-5790**	1	MOTOR GP-WINDOW WIPER (FRONT)	1810
M	12	1	**5C-9553**	1	BOLT (M6X1X16-MM)	
	13	1	**8T-4205**	1	WASHER-HARD (7.2X14.5X2-MM THK)	
D	14	2	**144-0195**		HOSE (1.1-M)	
D	15	2	**144-0195**		HOSE (1.9-M)	

C-CHANGE FROM PREVIOUS TYPE
D-ORDER BY THE METER
M-METRIC PART
Y-SEPARATE ILLUSTRATION

109-8196 **WIPER GP-WINDOW** *(contd.)* **i02387234**

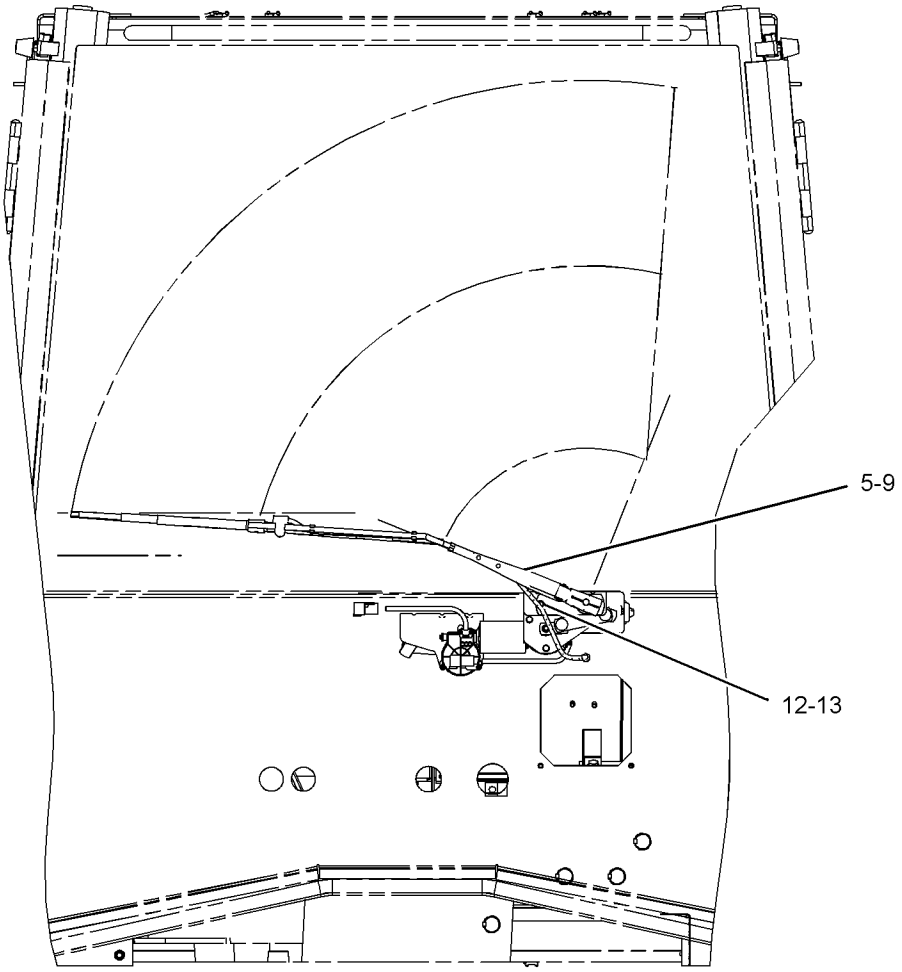

REAR VIEW

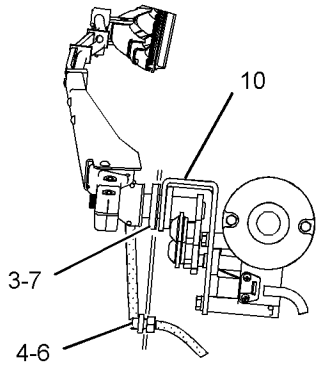

VIEW OF AREA A

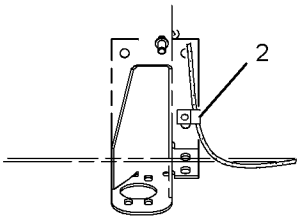

VIEW D-D

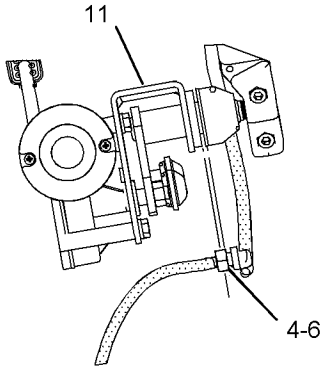

VIEW OF AREA B

GRAPHIC #1 g01021908

109-8196 **WIPER GP-WINDOW** *(contd.)* **i02387234**

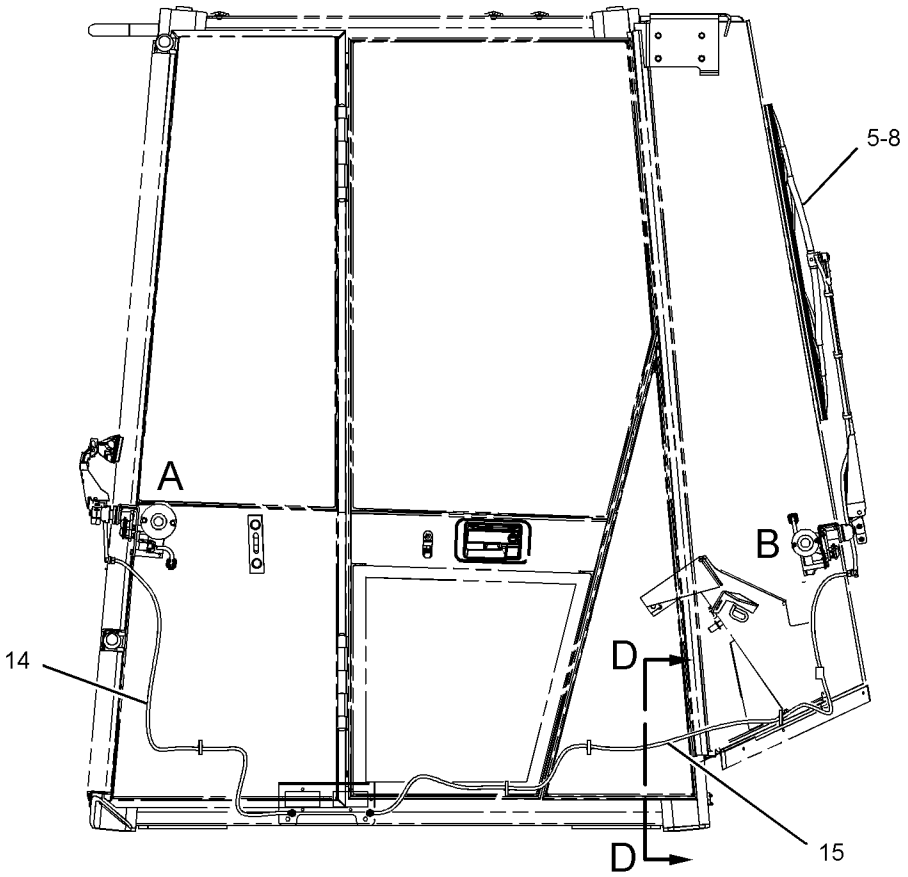

RIGHT SIDE VIEW

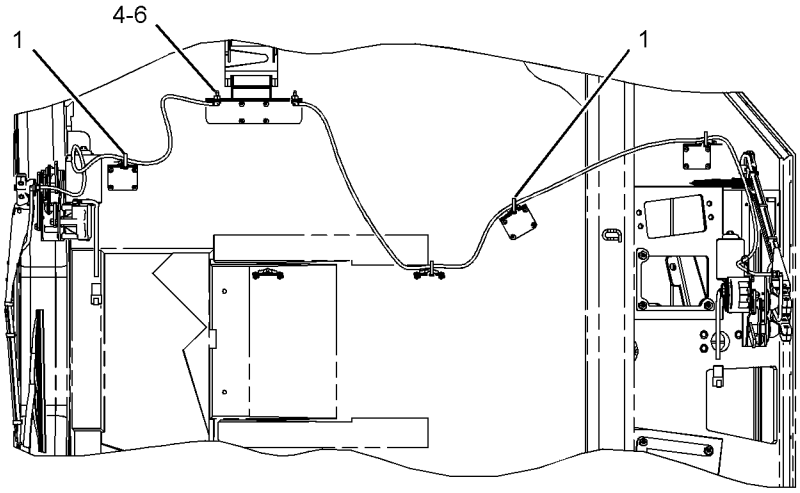

BOTTOM VIEW

GRAPHIC #2 **<END>** g01021910

OPERATOR STATION

109-8196 WIPER GP-WINDOW

S/N: BXY202-UP

PART OF 227-3190, 292-6110 CAB AR

SMCS-7305 **i02610408**

NOTE	REF NO	GRAPHIC REF	PART NUMBER	QTY	PART NAME 1 2 3 4 5 6 (PRODUCT LEVEL)	SEE PAGE
	1	1	**3S-2093**	4	STRAP-CABLE	
C	2	1	**3V-3263**	2	CONNECTOR (HOSE)	
	3	1	**6V-6210**	1	GASKET-SHAFT	
	4	1,2	**6V-7419**	2	BLADE AS-WIPER (700-MM)	
C	5	1,2	**8T-5400**	2	CONNECTOR AS	
	6	1	**124-3637**	1	PLATE-WIPER	
Y	7	1	**155-5789**	1	MOTOR GP-WINDOW WIPER (REAR)	1809
Y	8	2	**155-5790**	1	MOTOR GP-WINDOW WIPER (FRONT)	1810
Y	9	2	**214-7634**	1	ARM GP-WINDOW WIPER (REAR)	1700
Y	10	1	**214-7635**	1	ARM GP-WINDOW WIPER (FRONT)	1701
M	11	2	**5C-9553**	1	BOLT (M6X1X16-MM)	
C	12	1	**5P-9085**	2	CLIP	
	13	2	**8T-4205**	1	WASHER-HARD (7.2X14.5X2-MM THK)	
CE	14	1	**144-0195**		HOSE (110-CM)	
CE	14A	1	**144-0195**		HOSE (190-CM)	

C-CHANGE FROM PREVIOUS TYPE
E-ORDER BY THE CENTIMETER
M-METRIC PART
Y-SEPARATE ILLUSTRATION

109-8196 **WIPER GP-WINDOW** *(contd.)* **i02610408**

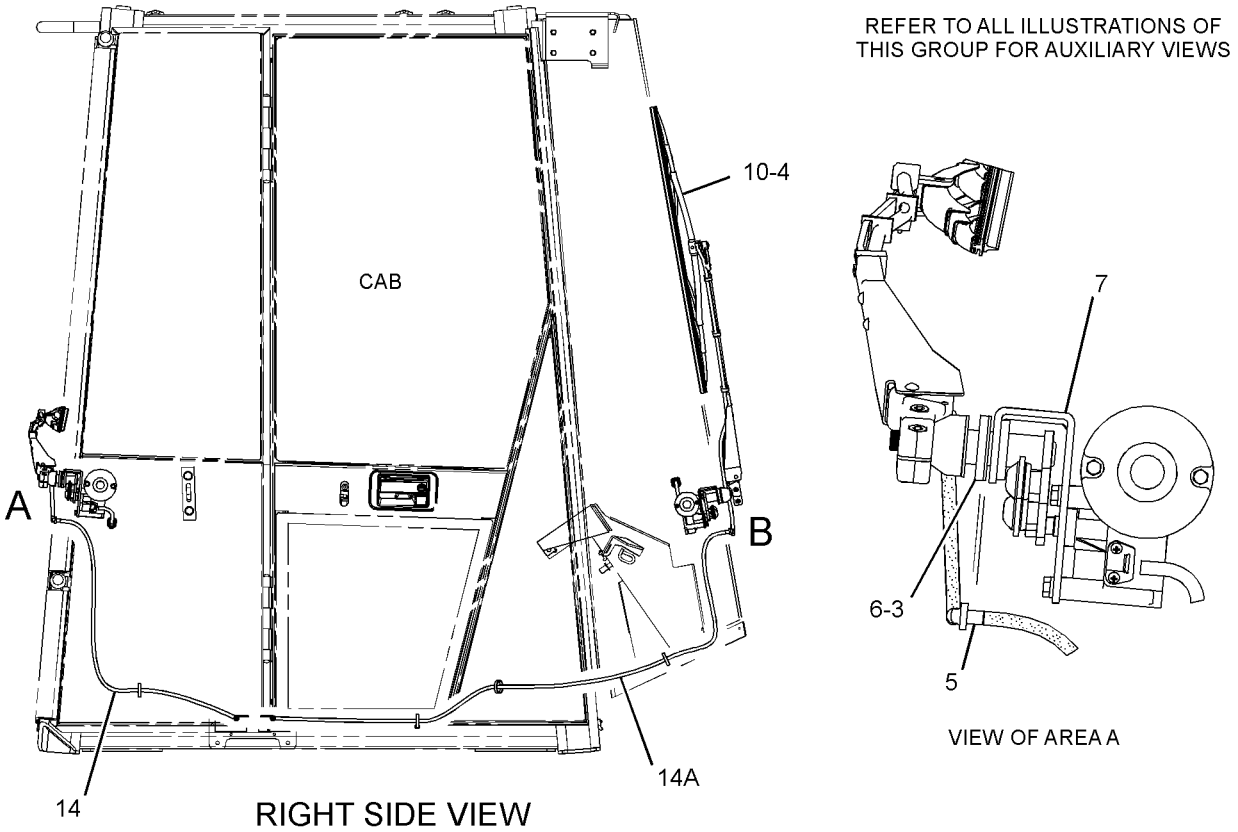

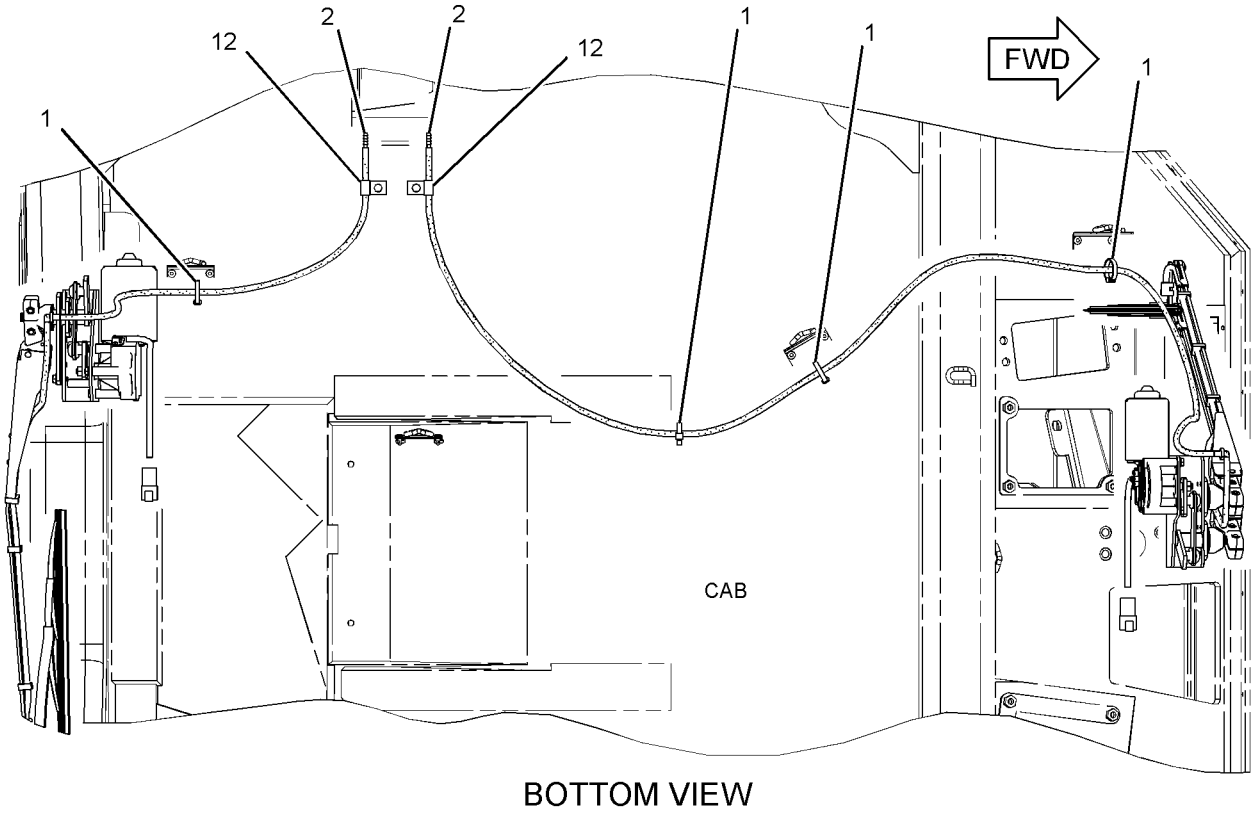

GRAPHIC #1 g01338113

109-8196 **WIPER GP-WINDOW** *(contd.)* **i02610408**

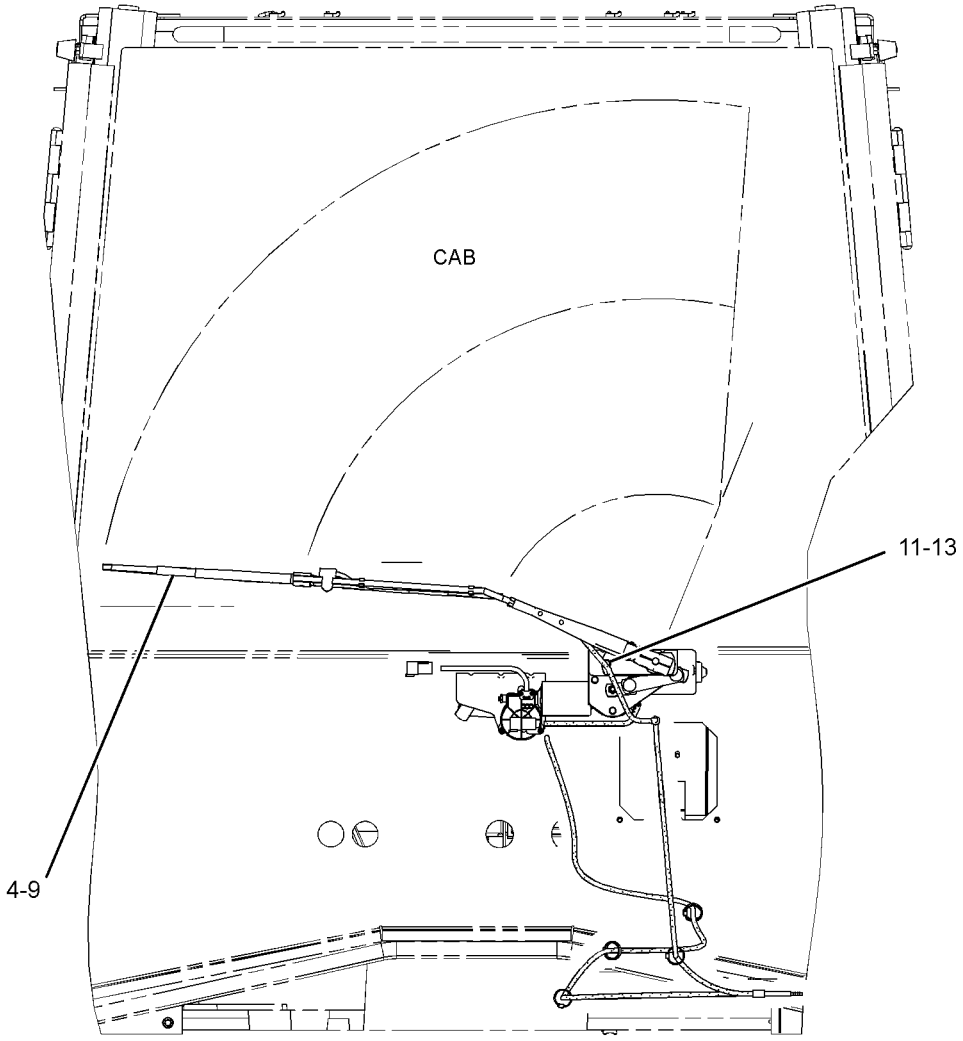

REAR VIEW

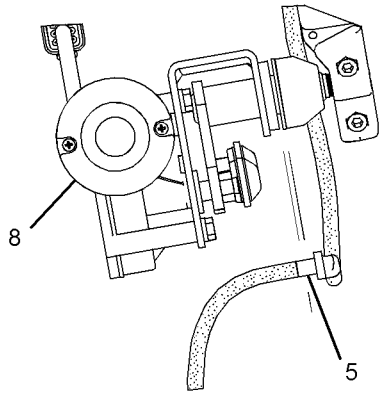

VIEW OF AREA B

GRAPHIC #2 **<END>** g01338115

OPERATOR STATION

109-8196 WIPER GP-WINDOW

S/N: BXY1900-2908

PART OF 292-6110 CAB AR

SMCS-7305 **i03017446**

NOTE	REF NO	GRAPHIC REF	PART NUMBER	QTY	PART NAME 1 2 3 4 5 6 (PRODUCT LEVEL)	SEE PAGE
C	1	1,2,3	**3S-2093**	16	STRAP-CABLE	
	3	1	**6V-6210**	1	GASKET-SHAFT	
	4	1,2	**6V-7419**	2	BLADE AS-WIPER (700-MM)	
	5	1,2	**8T-5400**	2	CONNECTOR AS	
	6	1	**124-3637**	1	PLATE-WIPER	
Y	7	1	**155-5789**	1	MOTOR GP-WINDOW WIPER (REAR)	1809
Y	8	2	**155-5790**	1	MOTOR GP-WINDOW WIPER (FRONT)	1810
Y	9	2	**214-7634**	1	ARM GP-WINDOW WIPER (REAR)	1700
Y	10	1	**214-7635**	1	ARM GP-WINDOW WIPER (FRONT)	1701
M	11	2	**5C-9553**	1	BOLT (M6X1X16-MM)	
	13	2	**8T-4205**	1	WASHER-HARD (7.2X14.5X2-MM THK)	
CE	14	2	**144-0195**		HOSE (31.7-CM)	
CE	14A	2,3	**144-0195**		HOSE (29.1-CM EACH)	
CE	14B	1	**144-0195**		HOSE (32.8-CM)	
CE	14C	1	**144-0195**		HOSE (30.2-CM)	
CE	14D	3	**144-0195**		HOSE (35.8-CM)	
CE	14E	3	**144-0195**		HOSE (26.3-CM)	
CE	14F	3	**144-0195**		HOSE (34.4-CM)	

C-CHANGE FROM PREVIOUS TYPE
E-ORDER BY THE CENTIMETER
M-METRIC PART
Y-SEPARATE ILLUSTRATION

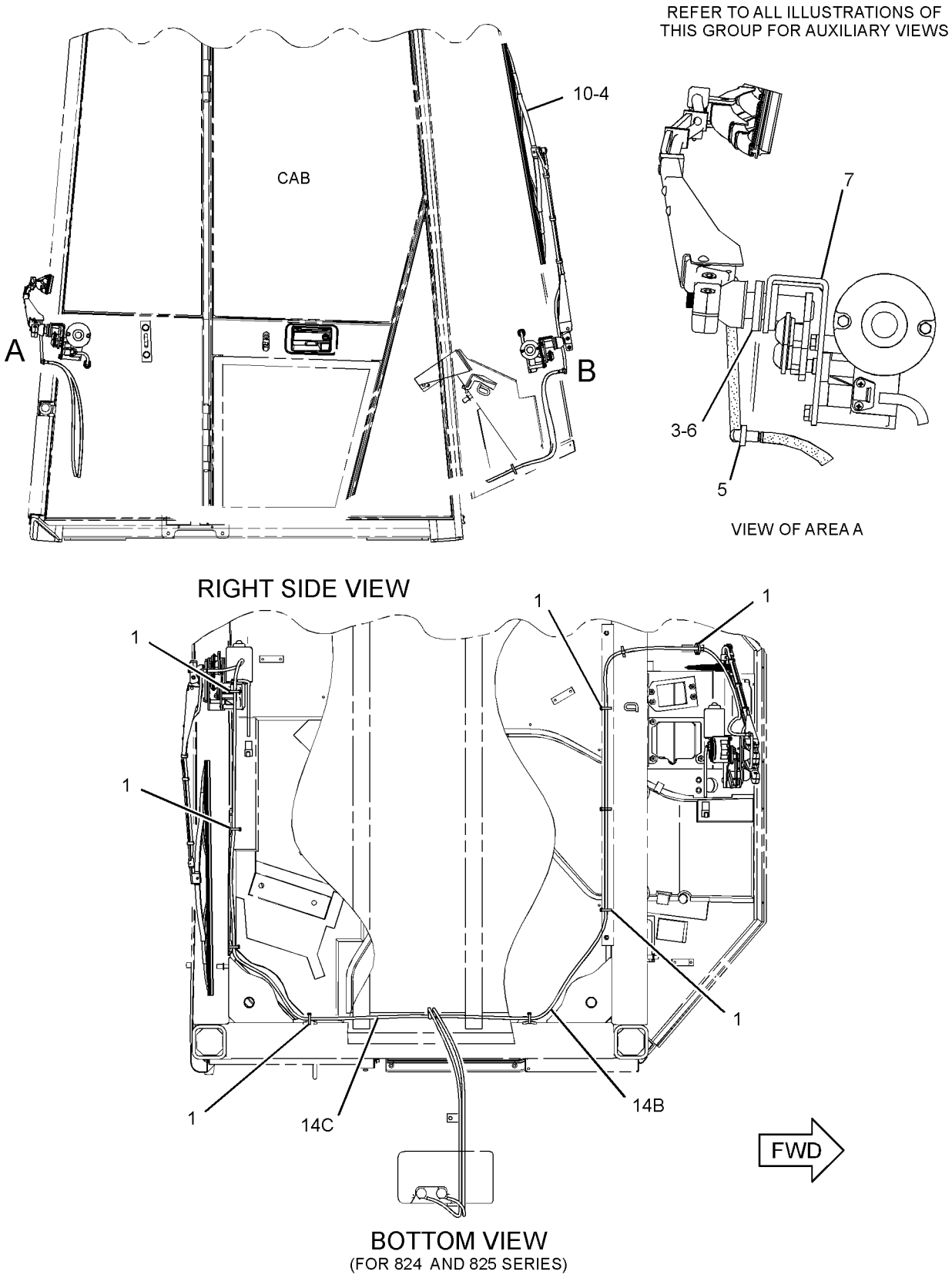

GRAPHIC #1 g01617874

109-8196 **WIPER GP-WINDOW** *(contd.)* **i03017446**

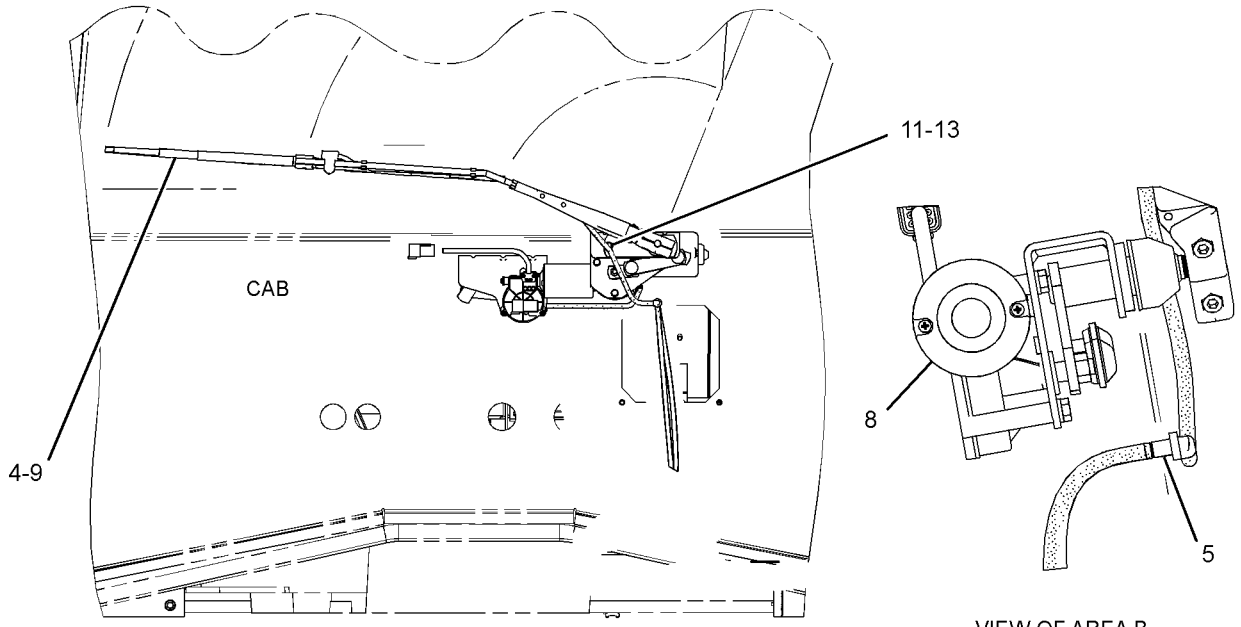

REAR VIEW

VIEW OF AREA B

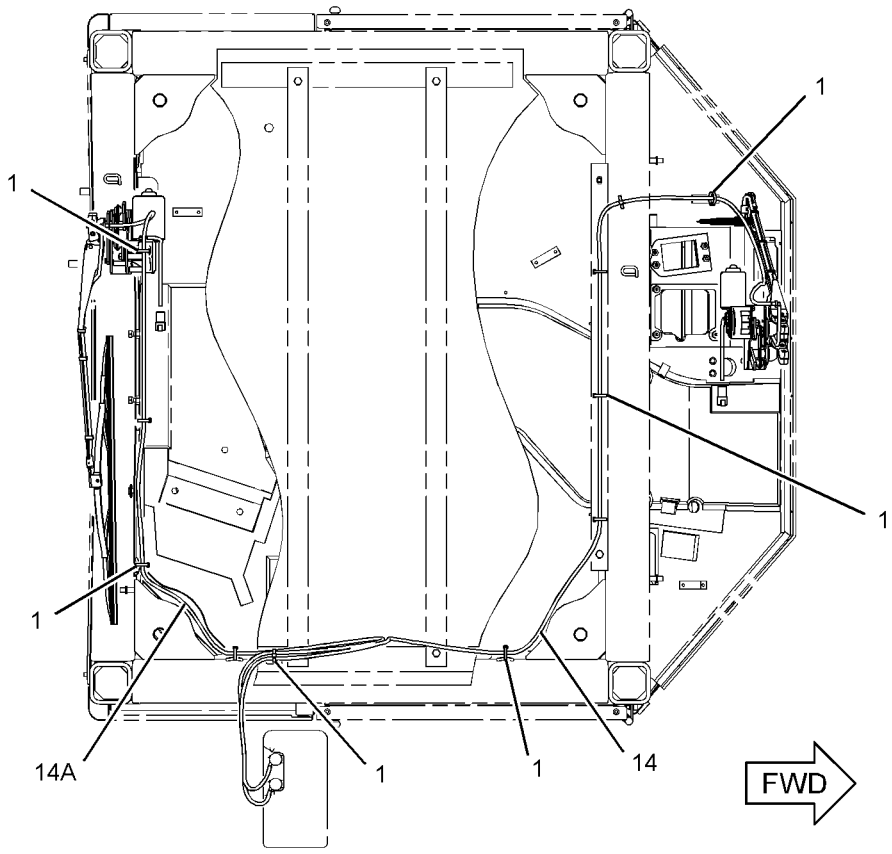

BOTTOM VIEW
(FOR 826 AND 826 STIC SERIES)

GRAPHIC #2 g01617875

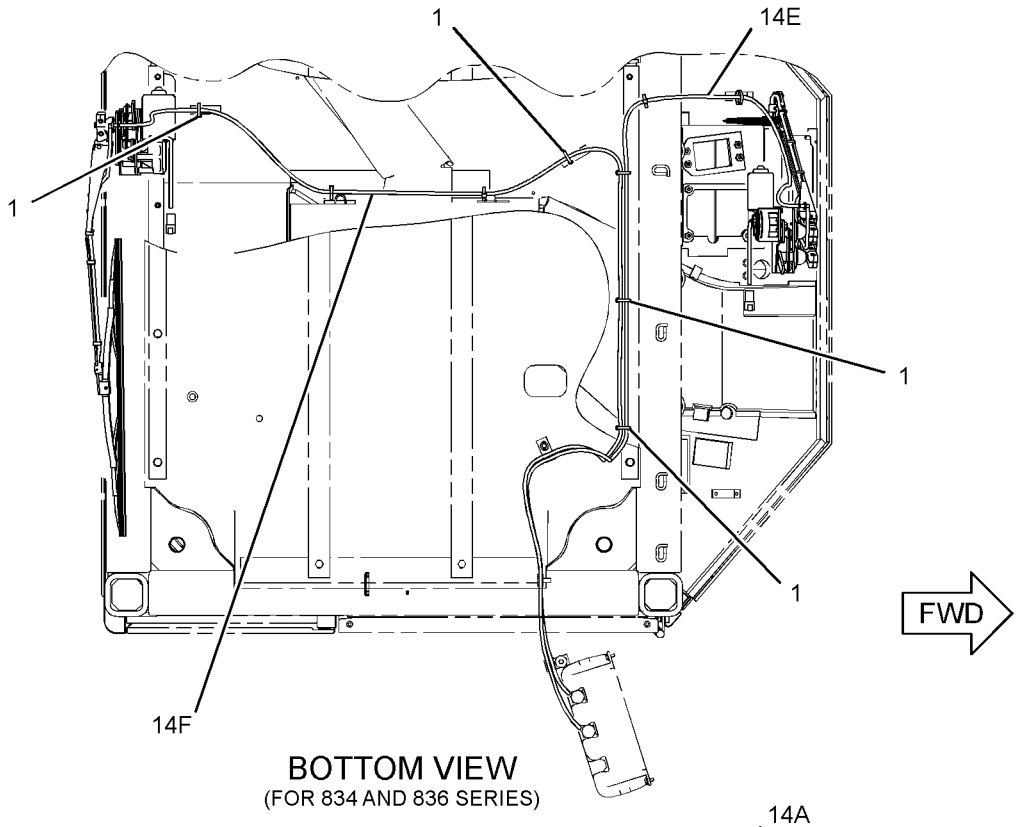

BOTTOM VIEW
(FOR 834 AND 836 SERIES)

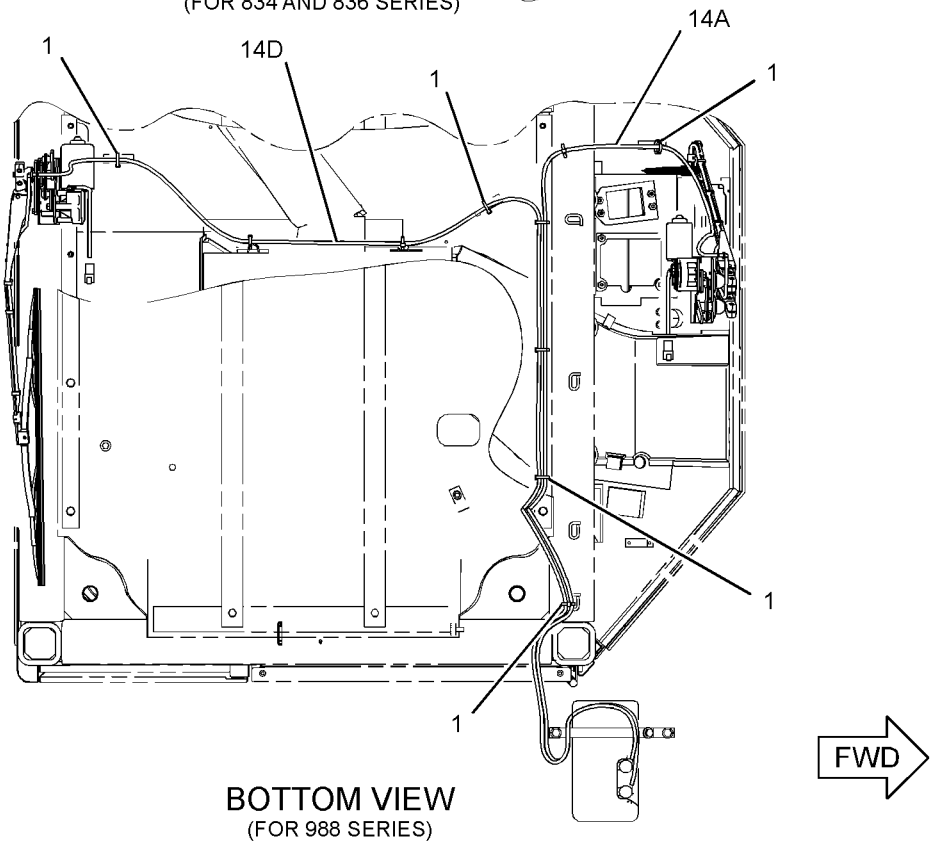

BOTTOM VIEW
(FOR 988 SERIES)

GRAPHIC #3 **<END>** g01617876

OPERATOR STATION

109-8196 WIPER GP-WINDOW

S/N: BXY2909-UP

PART OF 292-6110, 346-3826 CAB AR

SMCS-7305 **i03602175**

NOTE	REF NO	GRAPHIC REF	PART NUMBER	QTY	PART NAME 1 2 3 4 5 6 (PRODUCT LEVEL)	SEE PAGE
	1	1,2,3	**3S-2093**	16	STRAP-CABLE	
C	3	1	**6V-6210**	2	GASKET-SHAFT	
	4	1,2	**6V-7419**	2	BLADE AS-WIPER (700-MM)	
	5	1,2	**8T-5400**	2	CONNECTOR AS	
	6	1	**124-3637**	1	PLATE-WIPER	
CY	7	1	**330-5050**	1	MOTOR GP-WINDOW WIPER (REAR)	1812
Y	8	2	**155-5790**	1	MOTOR GP-WINDOW WIPER (FRONT)	1810
Y	9	2	**214-7634**	1	ARM GP-WINDOW WIPER (REAR)	1700
Y	10	1	**214-7635**	1	ARM GP-WINDOW WIPER (FRONT)	1701
M	11	2	**5C-9553**	1	BOLT (M6X1X16-MM)	
	13	2	**8T-4205**	1	WASHER-HARD (7.2X14.5X2-MM THK)	
E	14	2	**144-0195**		HOSE (31.7-CM)	
E	14A	2,3	**144-0195**		HOSE (29.1-CM EACH)	
E	14B	1	**144-0195**		HOSE (32.8-CM)	
E	14C	1	**144-0195**		HOSE (30.2-CM)	
E	14D	3	**144-0195**		HOSE (35.8-CM)	
E	14E	3	**144-0195**		HOSE (26.3-CM)	
E	14F	3	**144-0195**		HOSE (34.4-CM)	

C-CHANGE FROM PREVIOUS TYPE
E-ORDER BY THE CENTIMETER
M-METRIC PART
Y-SEPARATE ILLUSTRATION

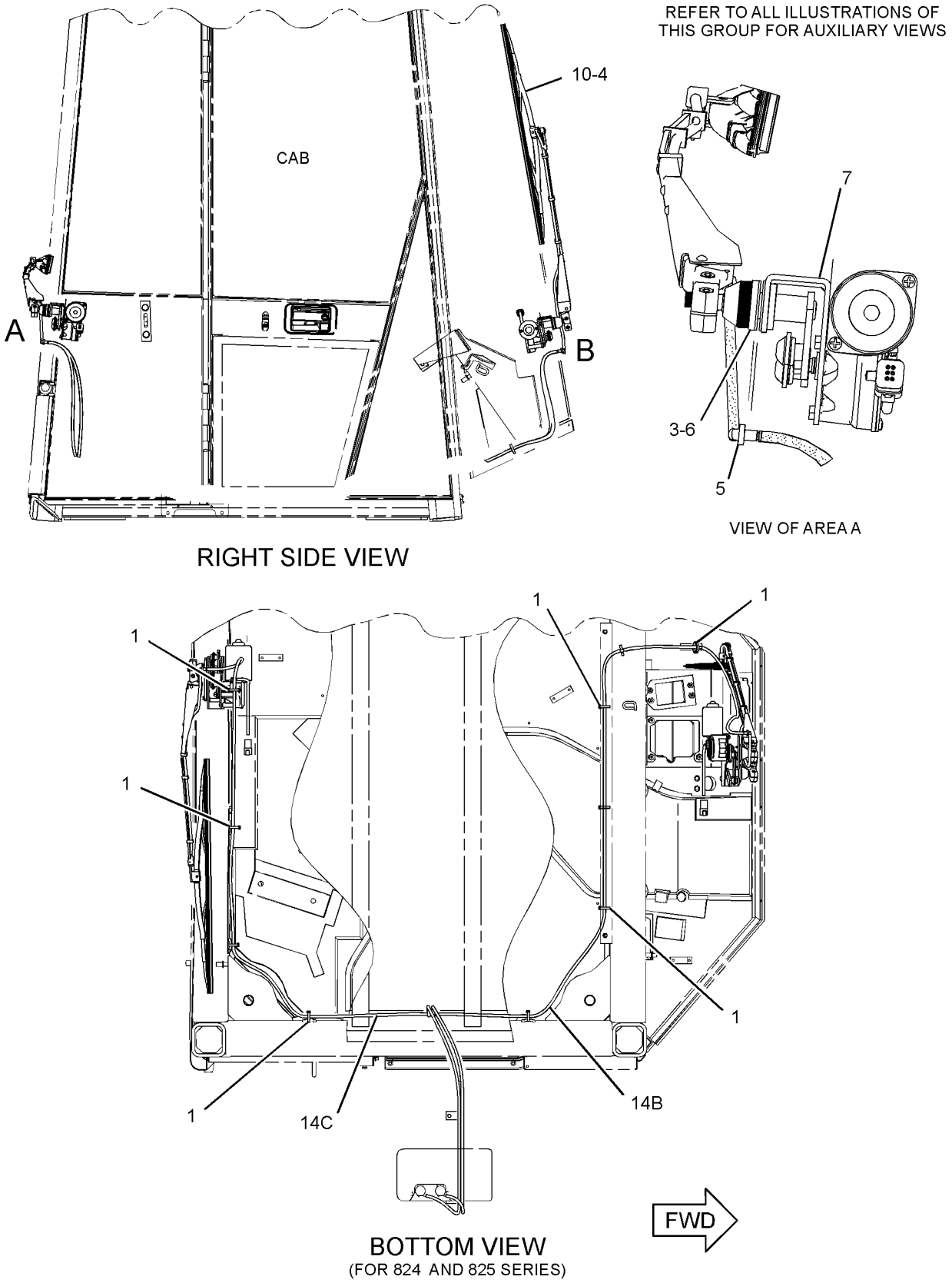

GRAPHIC #1 g02051837

109-8196 **WIPER GP-WINDOW** *(contd.)* **i03602175**

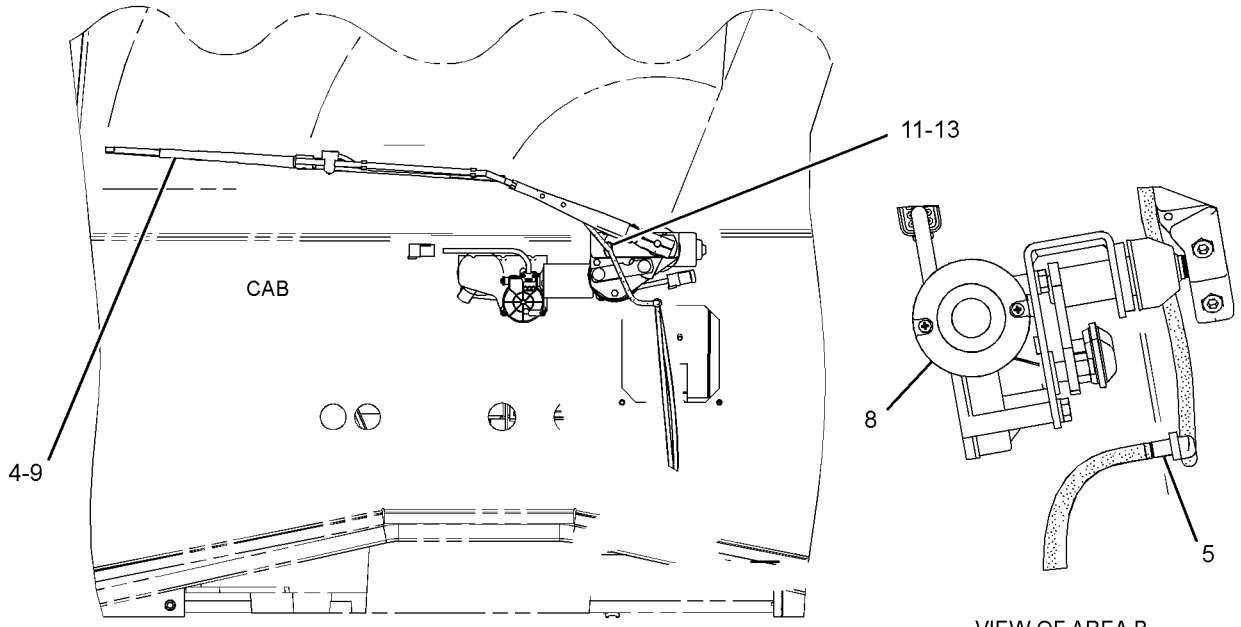

REAR VIEW

VIEW OF AREA B

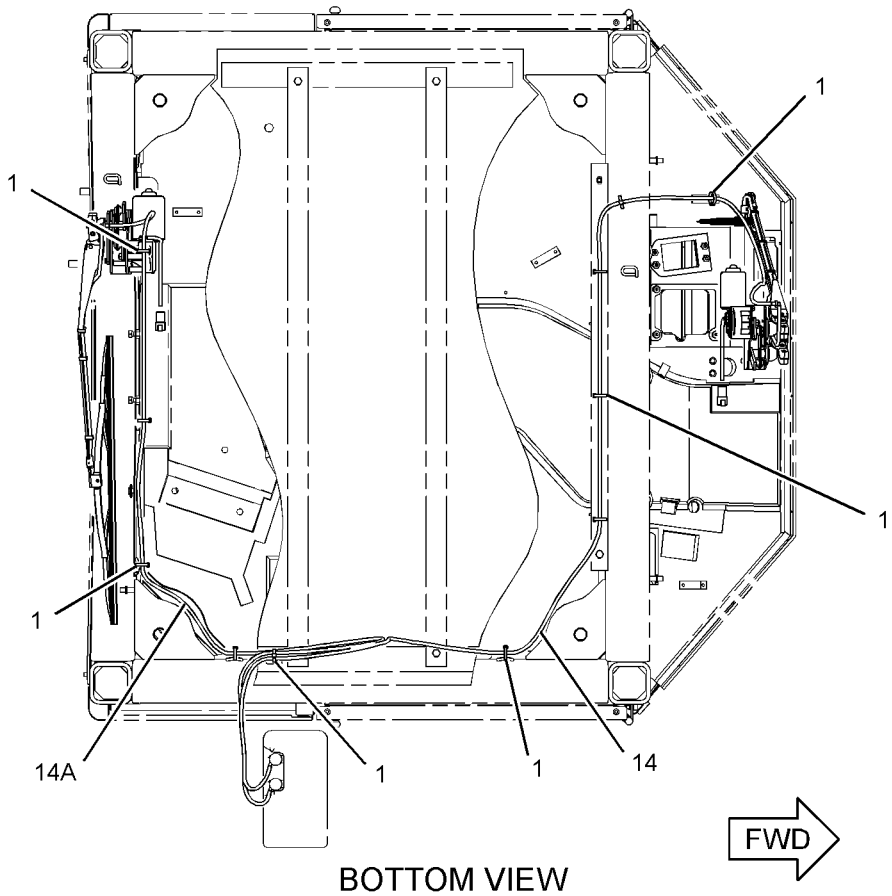

BOTTOM VIEW
(FOR 826 AND 826 STIC SERIES)

GRAPHIC #2 g02051838

109-8196 **WIPER GP-WINDOW** *(contd.)* **i03602175**

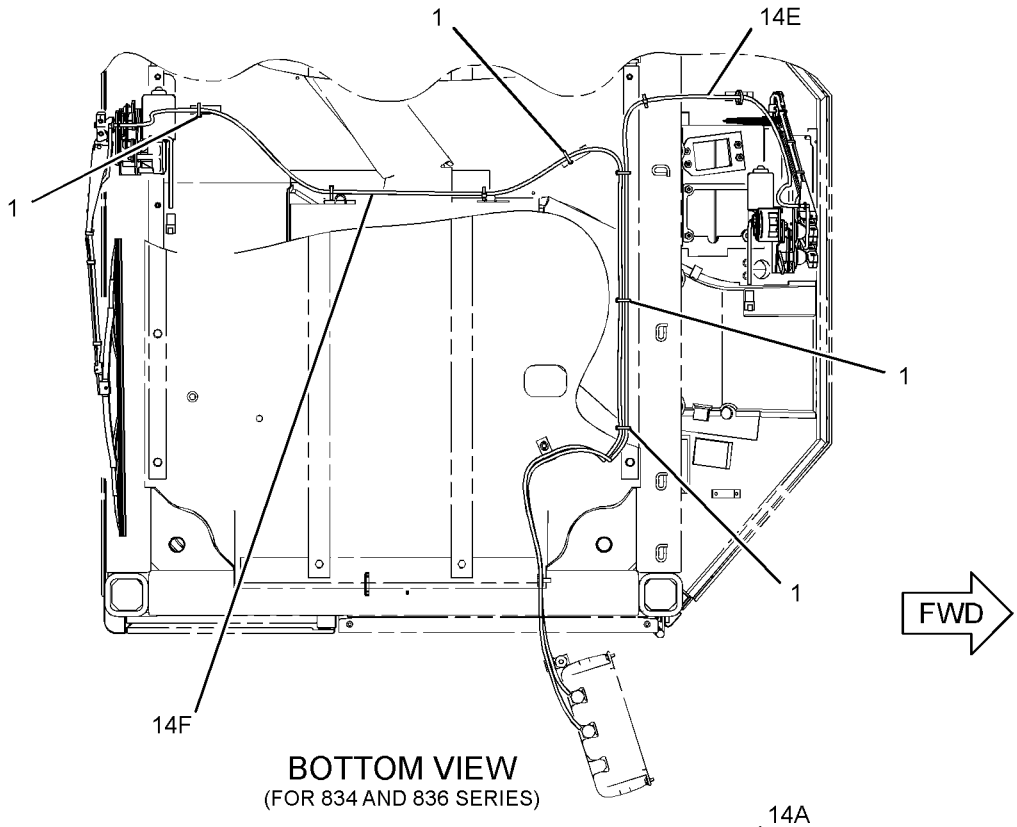

BOTTOM VIEW
(FOR 834 AND 836 SERIES)

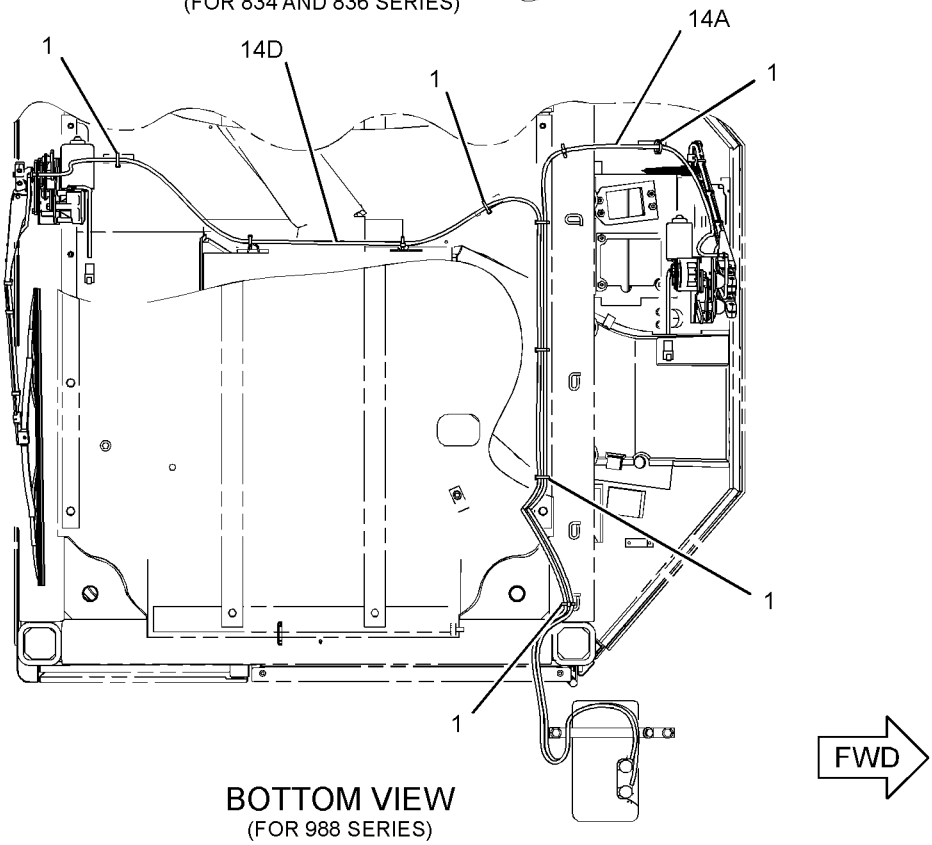

BOTTOM VIEW
(FOR 988 SERIES)

GRAPHIC #3 **<END>** g01617876

OPERATOR STATION

183-3756 WIPER GP-WINDOW

S/N: BXY1900-UP
PART OF 300-2780, 308-2727 CAB AR
AN ATTACHMENT

SMCS-7305 **i03623752**

NOTE	REF NO	GRAPHIC REF	PART NUMBER	QTY	PART NAME 1 2 3 4 5 6 (PRODUCT LEVEL)	SEE PAGE
B	1	1,2	**3S-2093**	15	STRAP-CABLE	
	2	2	**6V-6210**	2	GASKET-SHAFT	
	3	2	**6V-6864**	1	BLADE AS-WIPER (600-MM) (REAR)	
	4	2	**6V-7419**	1	BLADE AS-WIPER (700-MM) (FRONT)	
C	5	2	**8T-5400**	2	CONNECTOR AS	
	6	2	**124-3637**	1	PLATE-WIPER	
	7	2	**184-5092**	1	MOTOR GP-WINDOW WIPER (FRONT)	
		2	**8T-8737**	1	PLUG-SEAL	
		2	**186-3735**	5	PIN-CONNECTOR (16-GA TO 18-GA)	
		2	**102-8805**	1	KIT-RECEPTACLE (6-PIN)	
					(INCLUDES RECEPTACLE AS AND WEDGE)	
Y	8	2	**184-5093**	1	MOTOR GP-WINDOW WIPER (REAR)	1811
Y	9	2	**214-7634**	1	ARM GP-WINDOW WIPER (REAR)	1700
Y	10	2	**214-7635**	1	ARM GP-WINDOW WIPER (FRONT)	1701
M	11	2	**5C-9553**	1	BOLT (M6X1X16-MM)	
	12	2	**8T-4123**	4	WASHER (22X35X3.5-MM THK)	
	13	2	**8T-4205**	1	WASHER-HARD (7.2X14.5X2-MM THK)	
BE	14	1	**144-0195**		HOSE (344-CM)	
BE	14A	1	**144-0195**		HOSE (264-CM)	
BE	14B	1	**144-0195**		HOSE (291-CM)	
BE	14C	1	**144-0195**		HOSE (317-CM)	

B-USE AS REQUIRED
C-CHANGE FROM PREVIOUS TYPE
E-ORDER BY THE CENTIMETER
M-METRIC PART
Y-SEPARATE ILLUSTRATION

183-3756 **WIPER GP-WINDOW** *(contd.)* **i03623752**

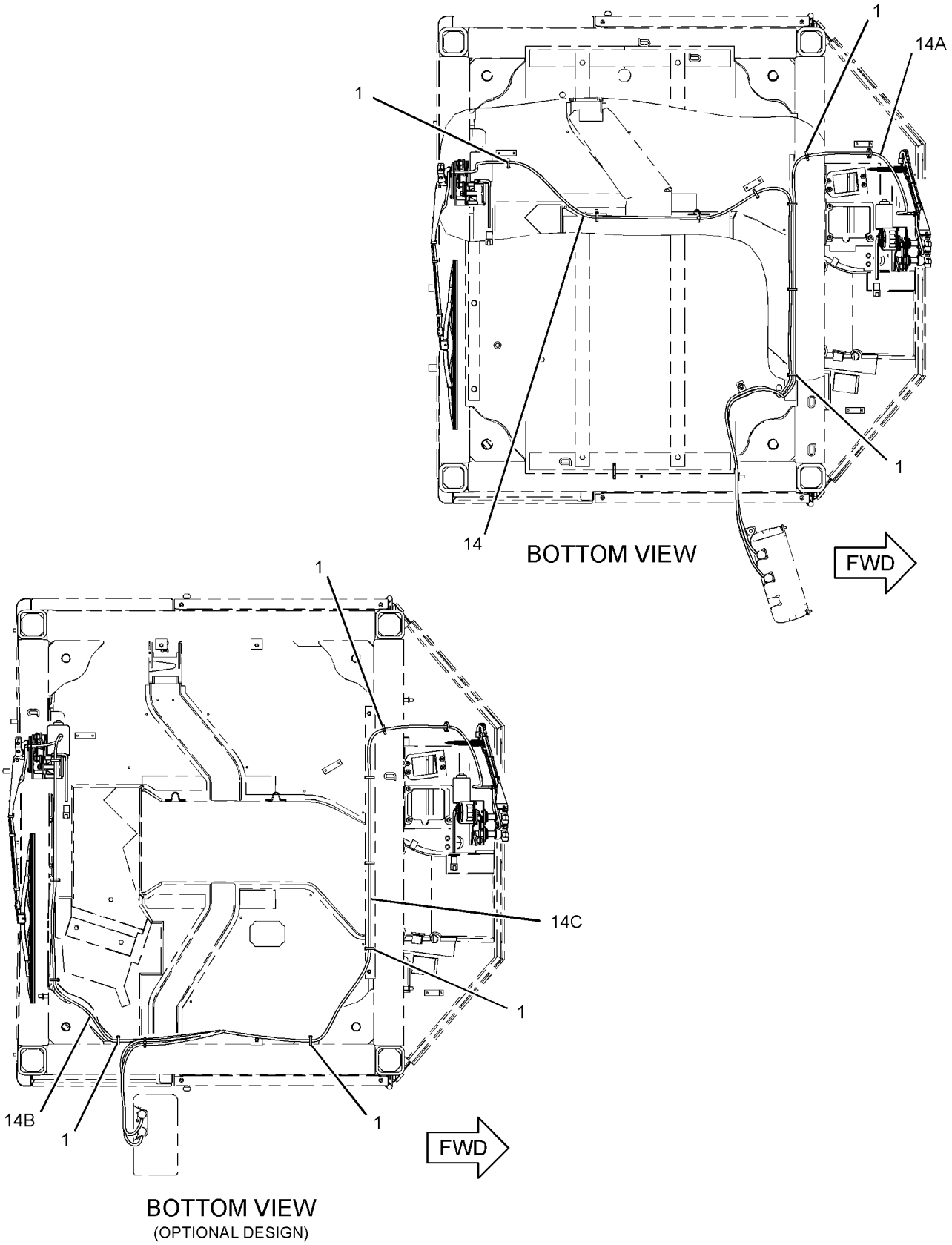

GRAPHIC #1 g02055233

183-3756 **WIPER GP-WINDOW** *(contd.)* **i03623752**

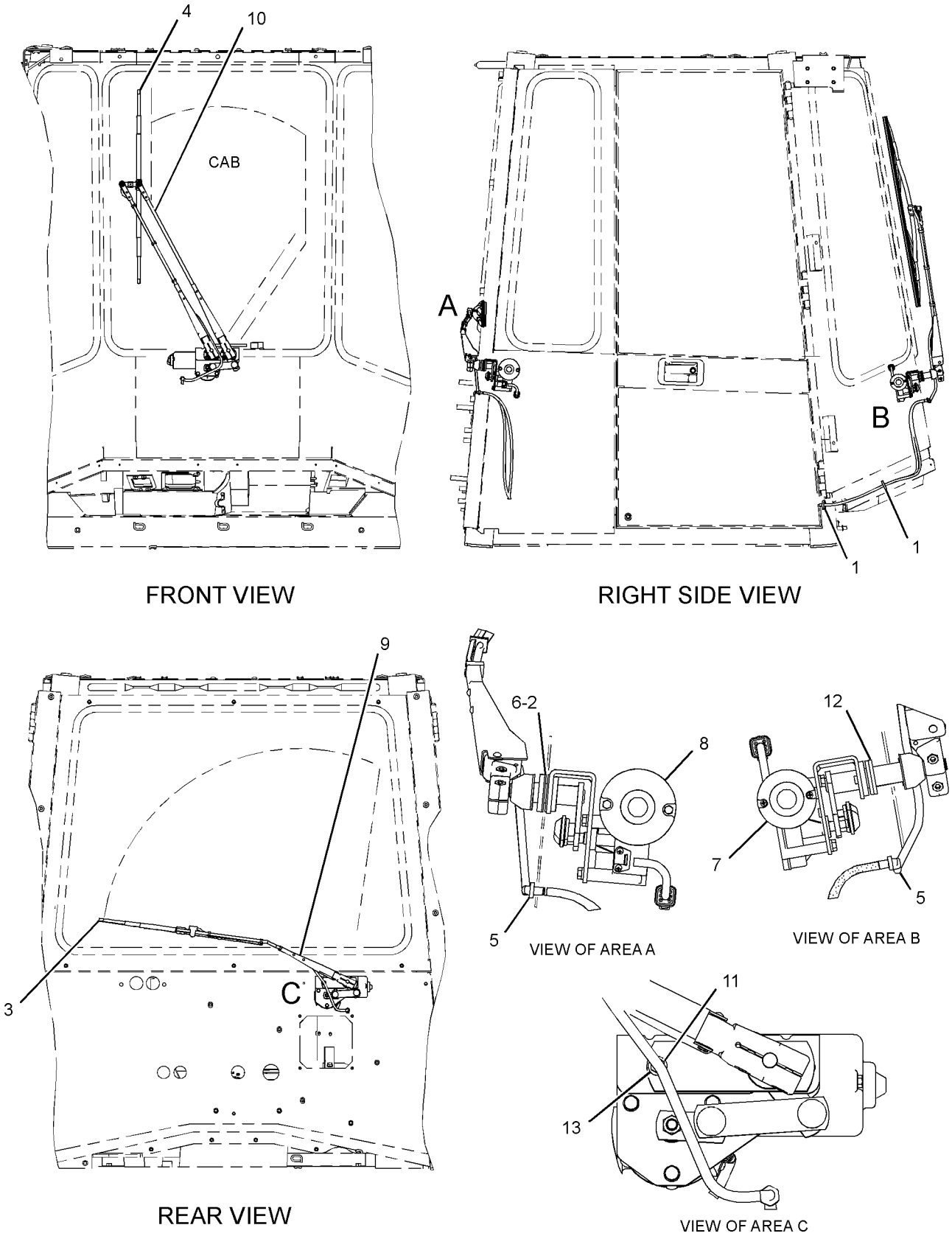

GRAPHIC #2 **<END>** g01911498

WORK TOOLS

9W-1377 ADAPTER GP-TIP

S/N: BXY1-UP
AN ATTACHMENT

SMCS-6803 **i00177625**

NOTE	PART NUMBER	QTY	PART NAME 1 2 3 4 5 6 (PRODUCT LEVEL)	SEE PAGE
	8E-2467	6	ADAPTER-STRAP	
	8E-2469	1	ADAPTER-STRAP-LH	
	8E-2468	1	ADAPTER-STRAP-RH	
	5P-8361	12	BOLT-PLOW	
	6V-8360	2	BOLT-PLOW (1-1/4-7X115MM)	
	5P-8362	14	NUT	

<END>

174-4117 ADAPTER GP-TIP

S/N: BXY1-UP
J460 GET
FOR USE WITH 171-4056 BUCKET AS
AN ATTACHMENT

SMCS-6803 **i02348744**

NOTE	PART NUMBER	QTY	PART NAME 1 2 3 4 5 6 (PRODUCT LEVEL)	SEE PAGE
	6I-8298	1	ADAPTER-TIP (LH)	
	6I-8299	1	ADAPTER-TIP (RH)	
	183-4605	6	ADAPTER-TIP (CENTER)	
	5P-8361	14	BOLT-PLOW (1-1/4-7X4.92-IN)	
	6V-6535	2	BOLT-PLOW (1-1/4X3.75-IN)	
	5P-8362	12	NUT (1-1/4-7-THD)	
	3K-9770	4	NUT-FULL (1-1/4-7-THD)	

<END>

WORK TOOLS

232-0167 ADAPTER GP-TIP

S/N: BXY1-UP
K-110
AN ATTACHMENT

SMCS-6803 **i03194042**

NOTE	REF NO	GRAPHIC REF	PART NUMBER	QTY	PART NAME 1 2 3 4 5 6 (PRODUCT LEVEL)	SEE PAGE
	1	1	**5P-8362**	12	NUT (1-1/4-7-THD)	
	2	1	**3K-9770**	4	NUT-FULL (1-1/4-7-THD)	
	3	1	**198-1092**	14	BOLT-PLOW (1-1/4-7X4.5-IN)	
	4	1	**5P-8361**	2	BOLT-PLOW (1-1/4-7X4.92-IN)	
	5	1	**315-0118**	1	ADAPTER-TIP (RH)	
	6	1	**315-0117**	6	ADAPTER-TIP (LH)	
	7	1	**315-0119**	1	ADAPTER-TIP (CENTER)	

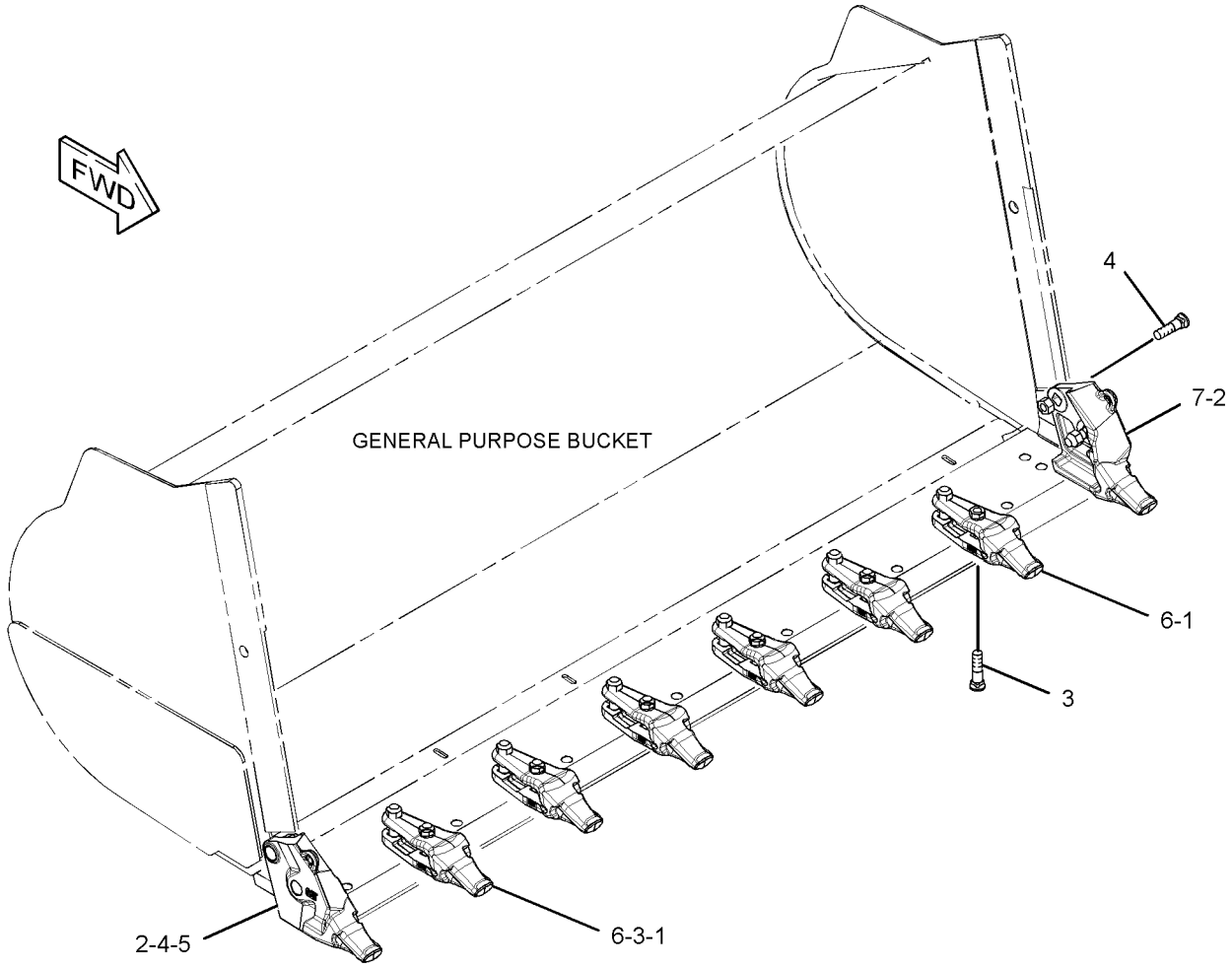

GRAPHIC #1 **<END>** g01840393

WORK TOOLS

223-8114 ADAPTER-TIP—2-STRAP, CENTER

S/N: BXY1-UP
K-110
AN ATTACHMENT

SMCS-6803 **i01966981**

NOTE	REF NO	GRAPHIC REF	PART NUMBER	QTY	PART NAME 1 2 3 4 5 6 (PRODUCT LEVEL)	SEE PAGE
					(NO SERVICED PARTS)	

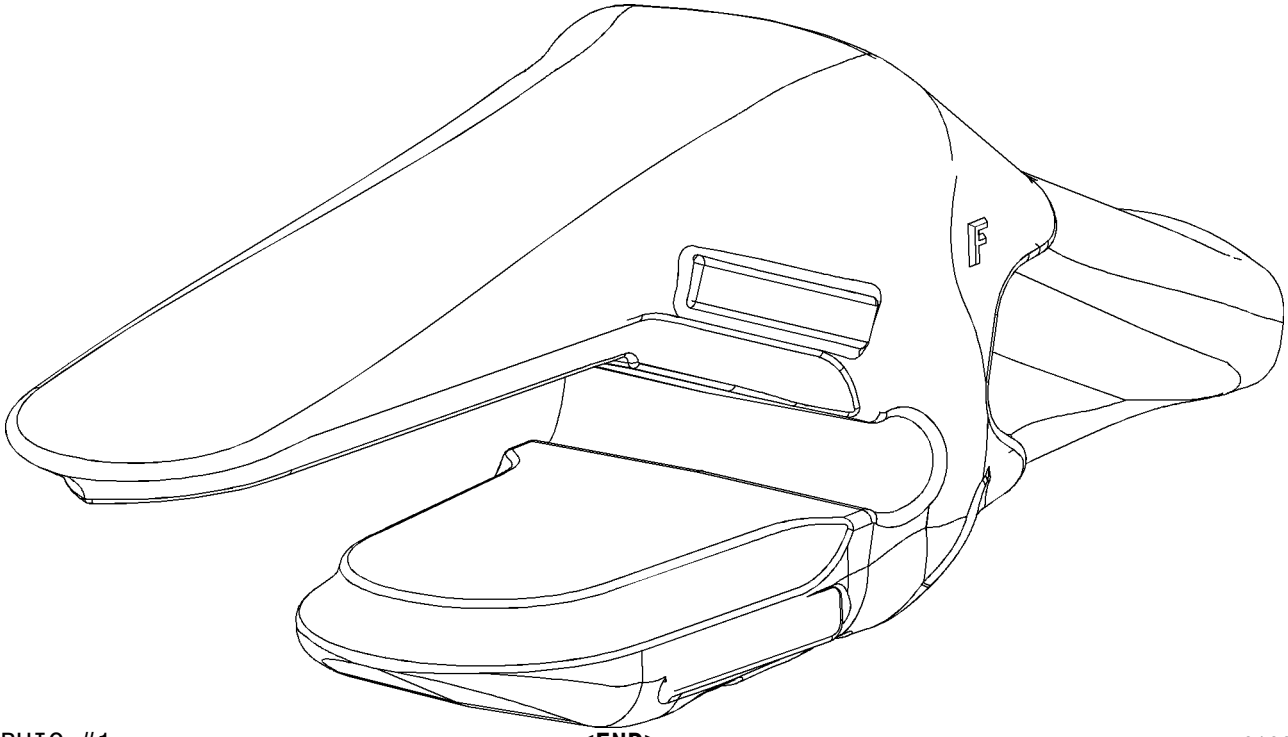

GRAPHIC #1 **<END>** g01024877

WORK TOOLS

223-8115 ADAPTER-TIP–2-STRAP, RH

S/N: BXY1-UP
K-110
AN ATTACHMENT

SMCS-6803 **i01966982**

NOTE	REF NO	GRAPHIC REF	PART NUMBER	QTY	PART NAME 1 2 3 4 5 6 (PRODUCT LEVEL)	SEE PAGE
					(NO SERVICED PARTS)	

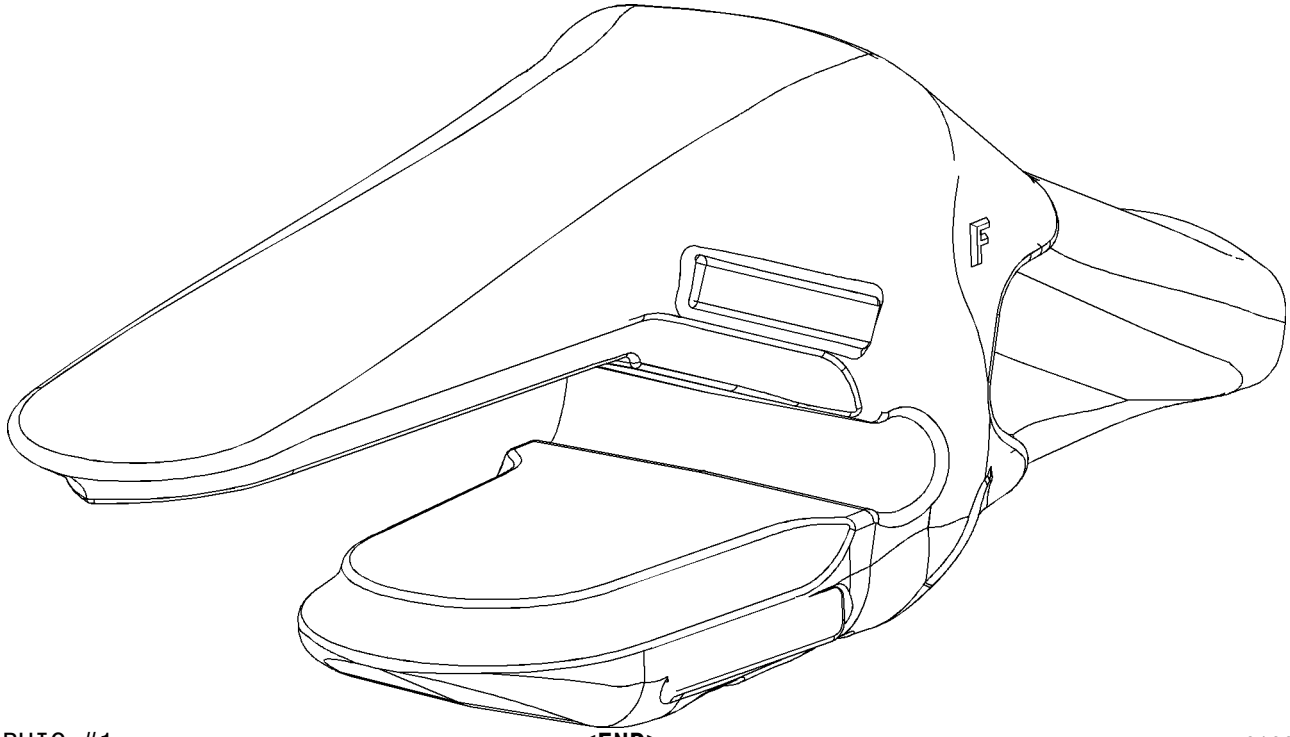

GRAPHIC #1 **<END>** g01024885

WORK TOOLS

223-8116 ADAPTER-TIP–2-STRAP, LH

S/N: BXY1-UP
K-110
AN ATTACHMENT

SMCS-6803 **i01966984**

NOTE	REF NO	GRAPHIC REF	PART NUMBER	QTY	PART NAME 1 2 3 4 5 6 (PRODUCT LEVEL)	SEE PAGE
					(NO SERVICED PARTS)	

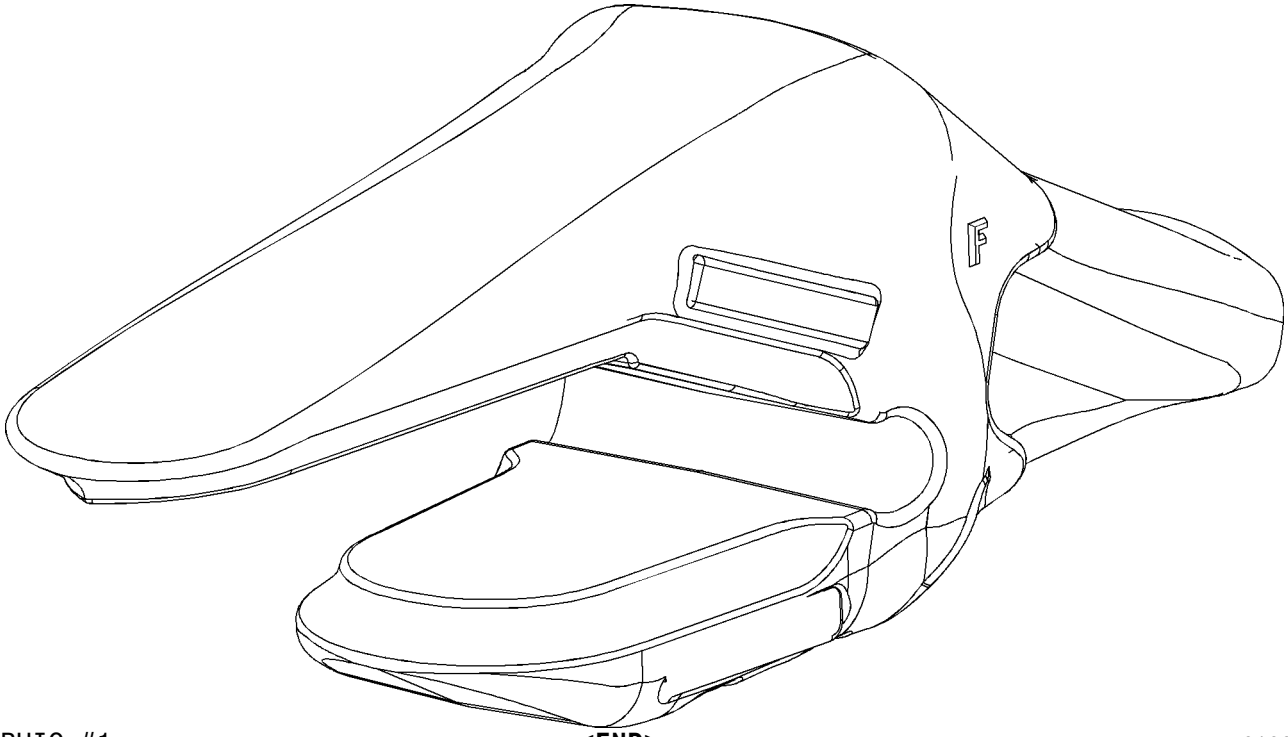

GRAPHIC #1 **<END>** g01024883

WORK TOOLS

229-7114 ADAPTER-TIP—FLUSH MOUNT

S/N: BXY1-UP
K-110
AN ATTACHMENT

SMCS-6803 **i02273171**

NOTE	REF NO	GRAPHIC REF	PART NUMBER	QTY	PART NAME 1 2 3 4 5 6 (PRODUCT LEVEL)	SEE PAGE
					(NO SERVICED PARTS)	

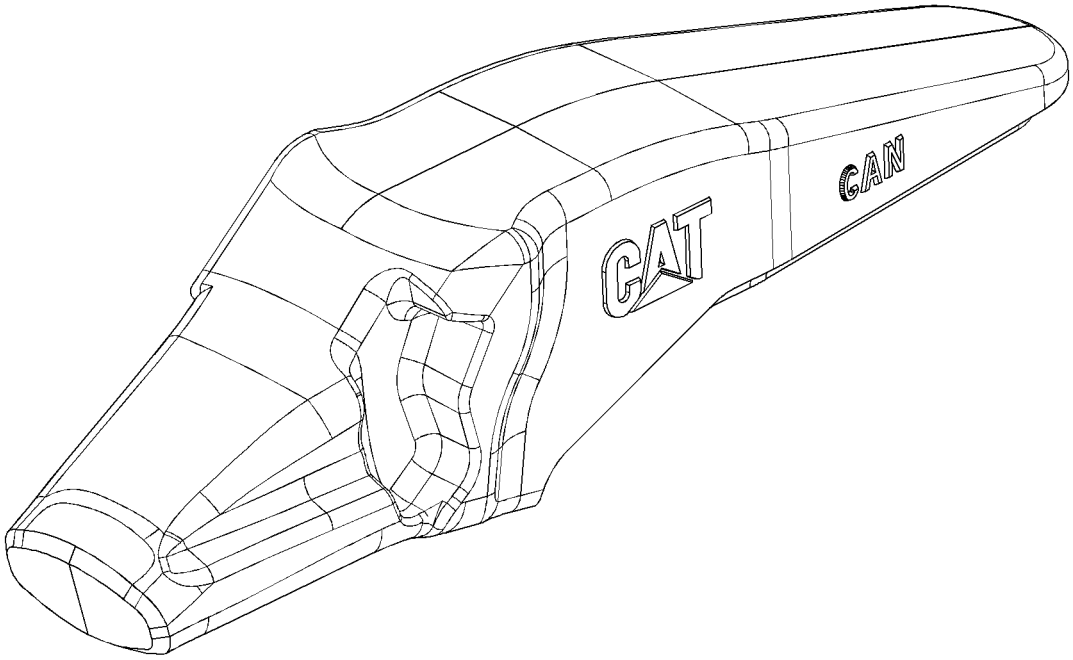

GRAPHIC #1 **<END>** g01139393

WORK TOOLS

229-7134 ADAPTER-TIP—FLUSH MOUNT

S/N: BXY1-UP
K-130
AN ATTACHMENT

SMCS-6803 **i02030307**

NOTE	REF NO	GRAPHIC REF	PART NUMBER	QTY	PART NAME 1 2 3 4 5 6 (PRODUCT LEVEL)	SEE PAGE
					(NO SERVICED PARTS)	

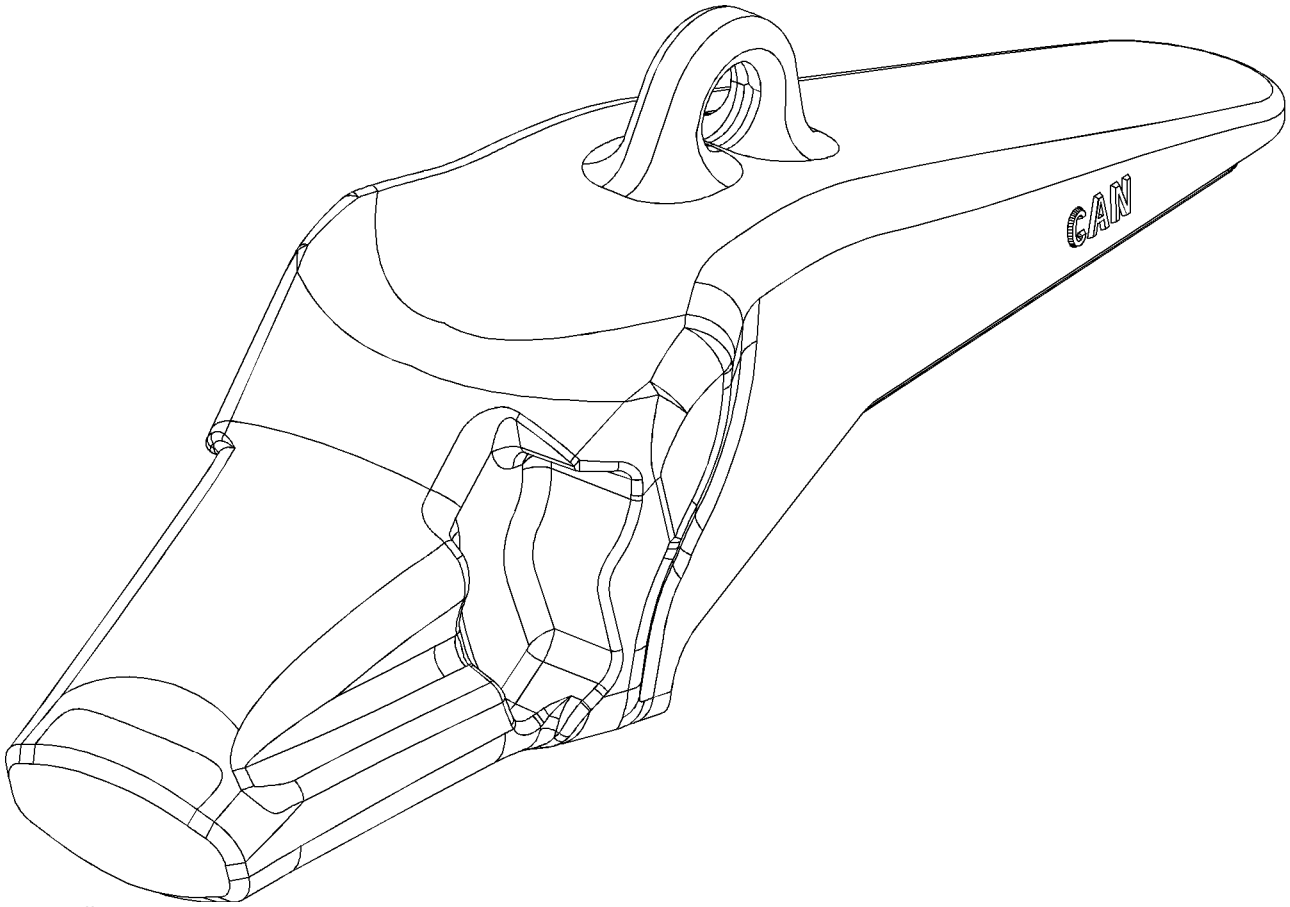

GRAPHIC #1 **<END>** g01047130

WORK TOOLS

232-0134 ADAPTER-TIP–2-STRAP, CENTER

S/N: BXY1-UP
K-130
FIELD INSTALLATION

SMCS-6803 **i02110879**

NOTE	REF NO	GRAPHIC REF	PART NUMBER	QTY	PART NAME 1 2 3 4 5 6 (PRODUCT LEVEL)	SEE PAGE
					(NO SERVICED PARTS)	

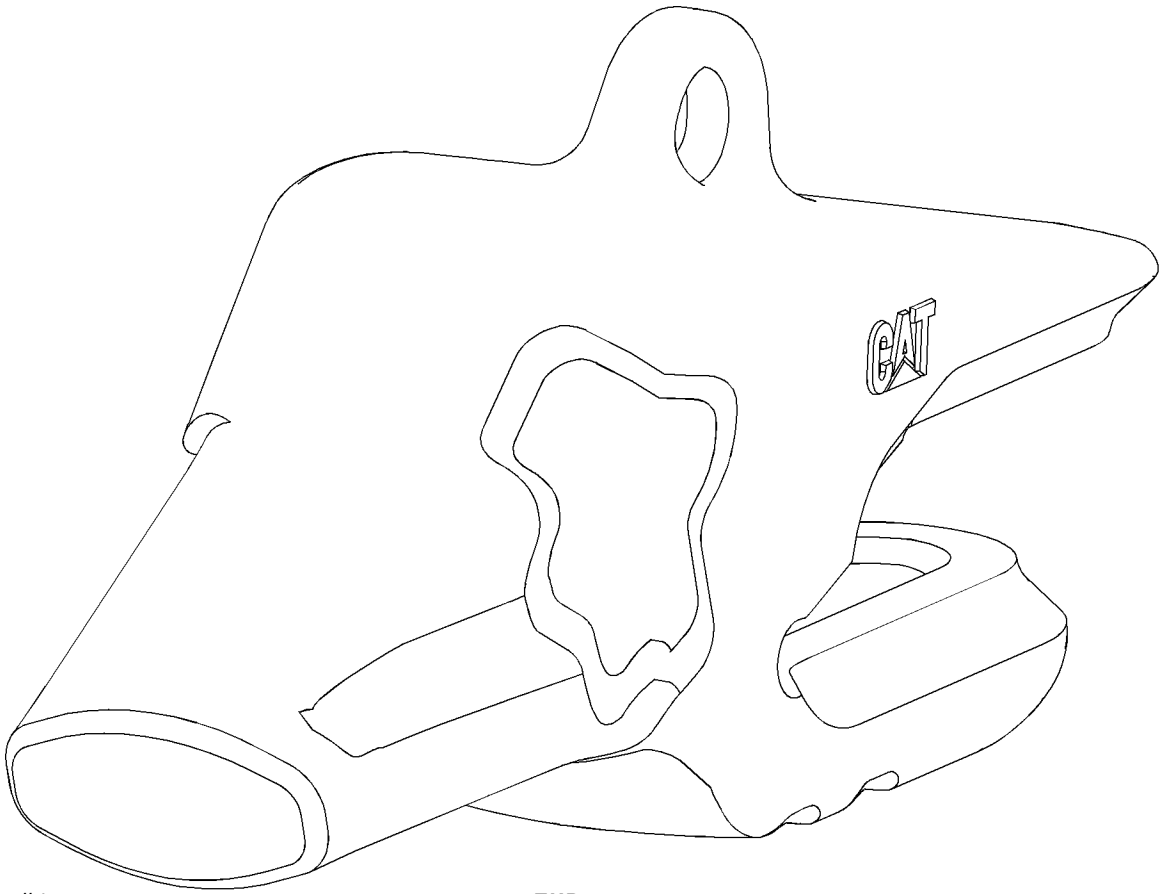

GRAPHIC #1 **<END>** g01087762

WORK TOOLS

232-0135 ADAPTER-TIP–2-STRAP, RH

S/N: BXY1-UP
K-130
FIELD INSTALLATION

SMCS-6803 **i02110877**

NOTE	REF NO	GRAPHIC REF	PART NUMBER	QTY	PART NAME 1 2 3 4 5 6 (PRODUCT LEVEL)	SEE PAGE
					(NO SERVICED PARTS)	

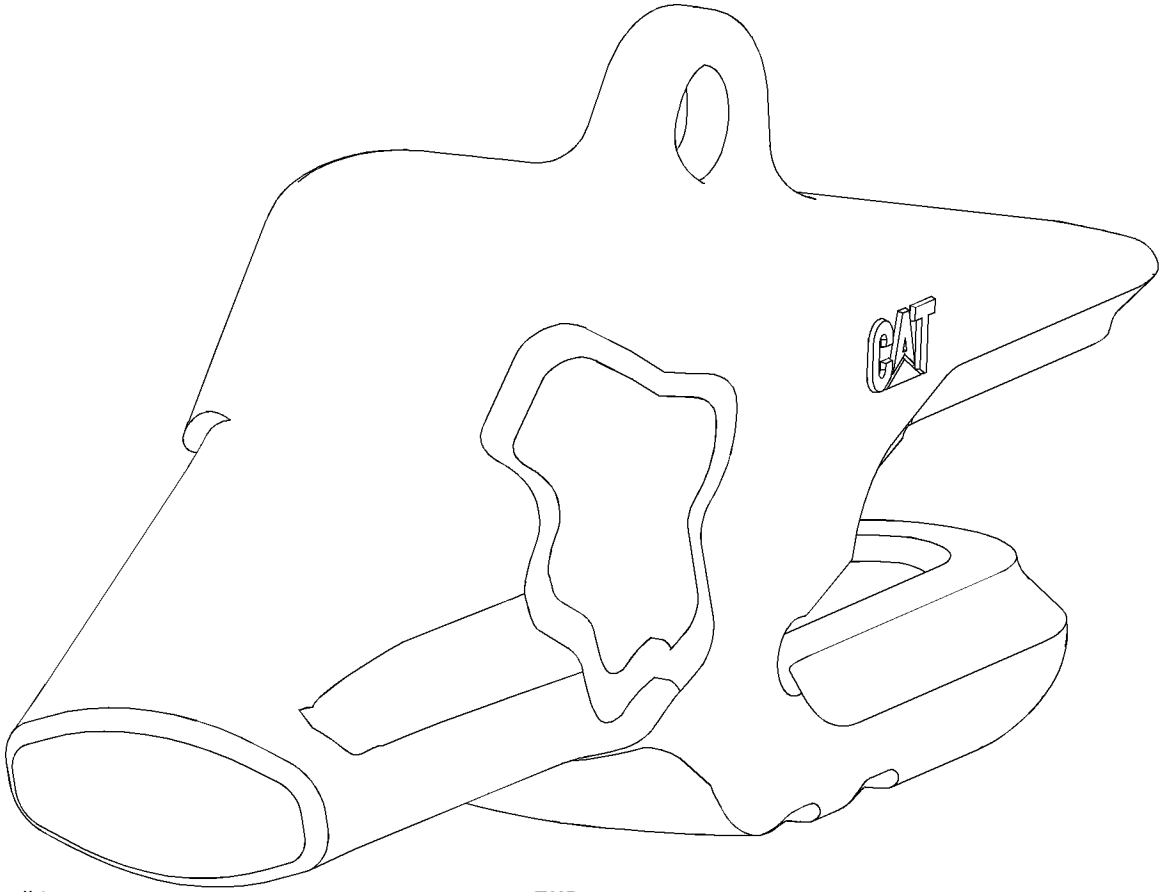

GRAPHIC #1 **<END>** g01087762

WORK TOOLS

232-0136 ADAPTER-TIP–2-STRAP, LH

S/N: BXY1-UP
K-130
FIELD INSTALLATION

SMCS-6803 **i02110864**

NOTE	REF NO	GRAPHIC REF	PART NUMBER	QTY	PART NAME 1 2 3 4 5 6 (PRODUCT LEVEL)	SEE PAGE
					(NO SERVICED PARTS)	

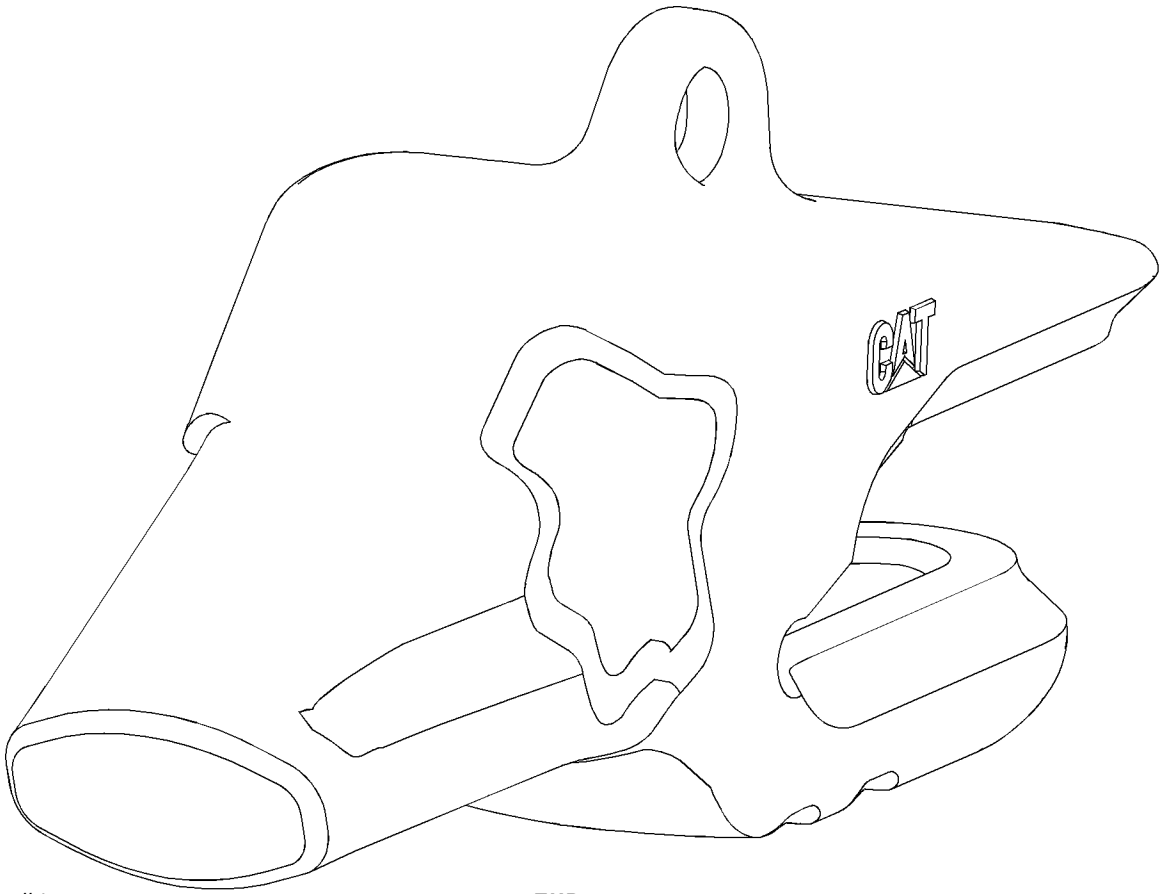

GRAPHIC #1 **<END>** g01087762

WORK TOOLS

232-0154 ADAPTER-TIP–2-STRAP, CENTER

S/N: BXY1-UP
K-150
AN ATTACHMENT

SMCS-6803 **i02349357**

NOTE	REF NO	GRAPHIC REF	PART NUMBER	QTY	PART NAME 1 2 3 4 5 6 (PRODUCT LEVEL)	SEE PAGE
					(NO SERVICED PARTS)	

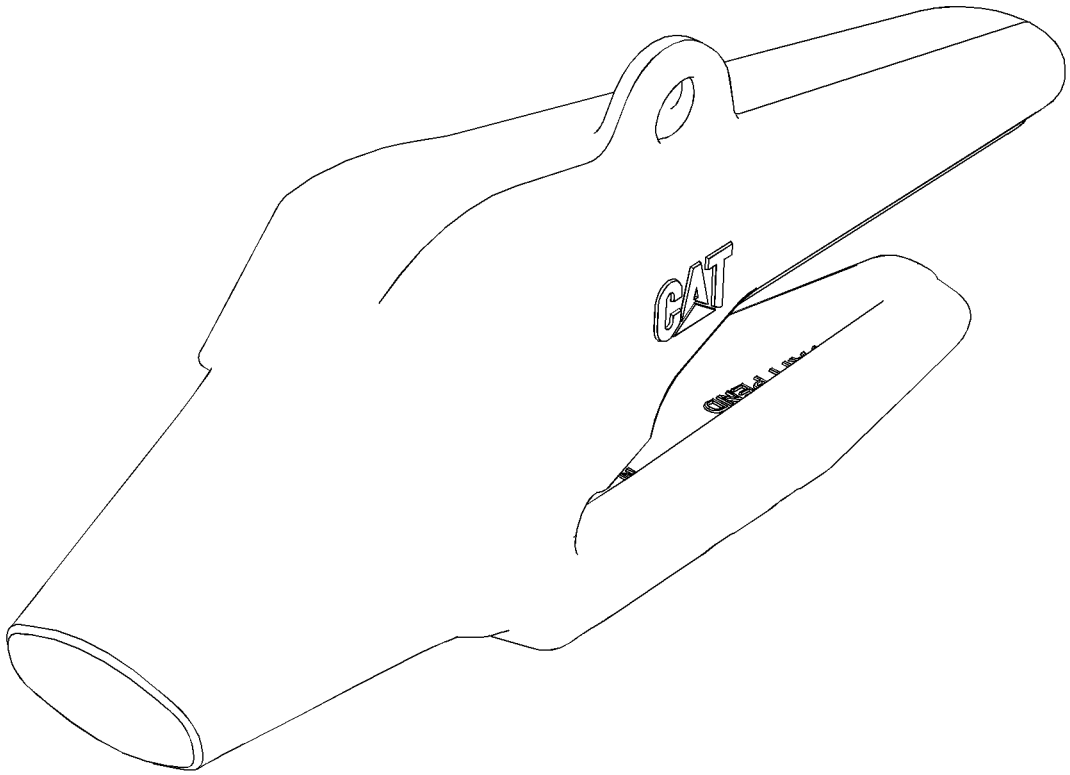

GRAPHIC #1 **<END>** g01174280

WORK TOOLS

232-0155 ADAPTER-TIP–2-STRAP, RH

S/N: BXY1-UP
K-150
AN ATTACHMENT

SMCS-6803 **i02349366**

NOTE	REF NO	GRAPHIC REF	PART NUMBER	QTY	PART NAME 1 2 3 4 5 6 (PRODUCT LEVEL)	SEE PAGE
					(NO SERVICED PARTS)	

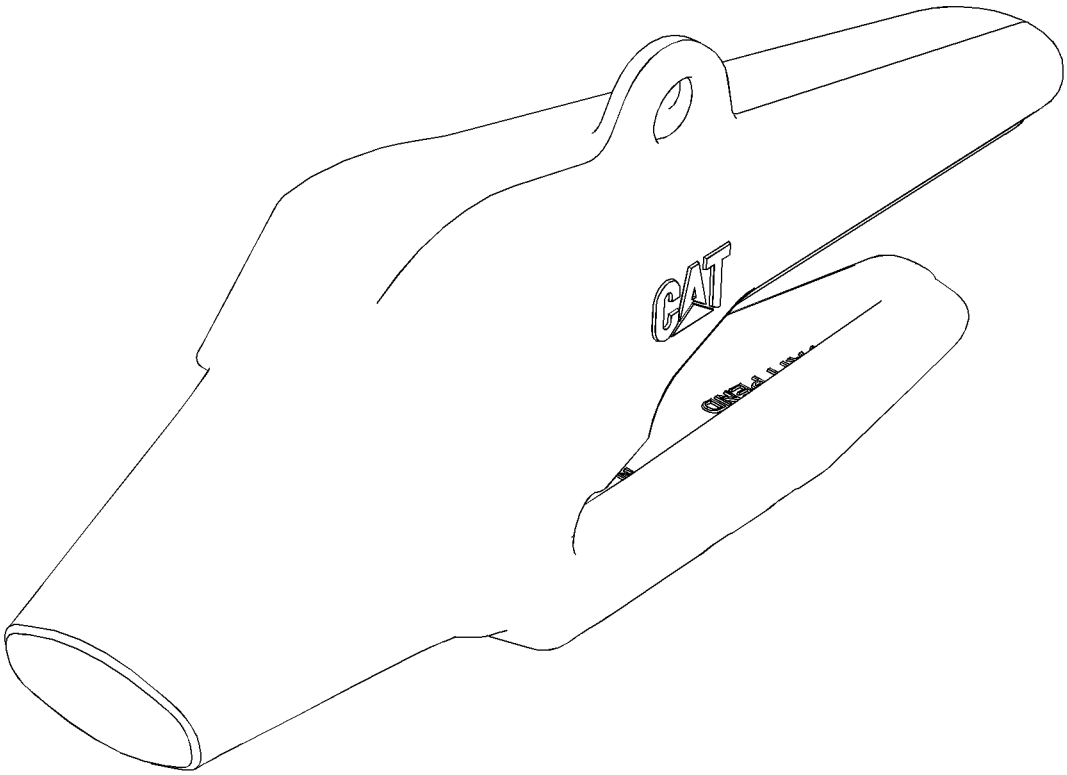

GRAPHIC #1 **<END>** g01174280

WORK TOOLS

232-0156 ADAPTER-TIP–2-STRAP, LH

S/N: BXY1-UP
K-150
AN ATTACHMENT

SMCS-6803 **i02349368**

NOTE	REF NO	GRAPHIC REF	PART NUMBER	QTY	PART NAME 1 2 3 4 5 6 (PRODUCT LEVEL)	SEE PAGE
					(NO SERVICED PARTS)	

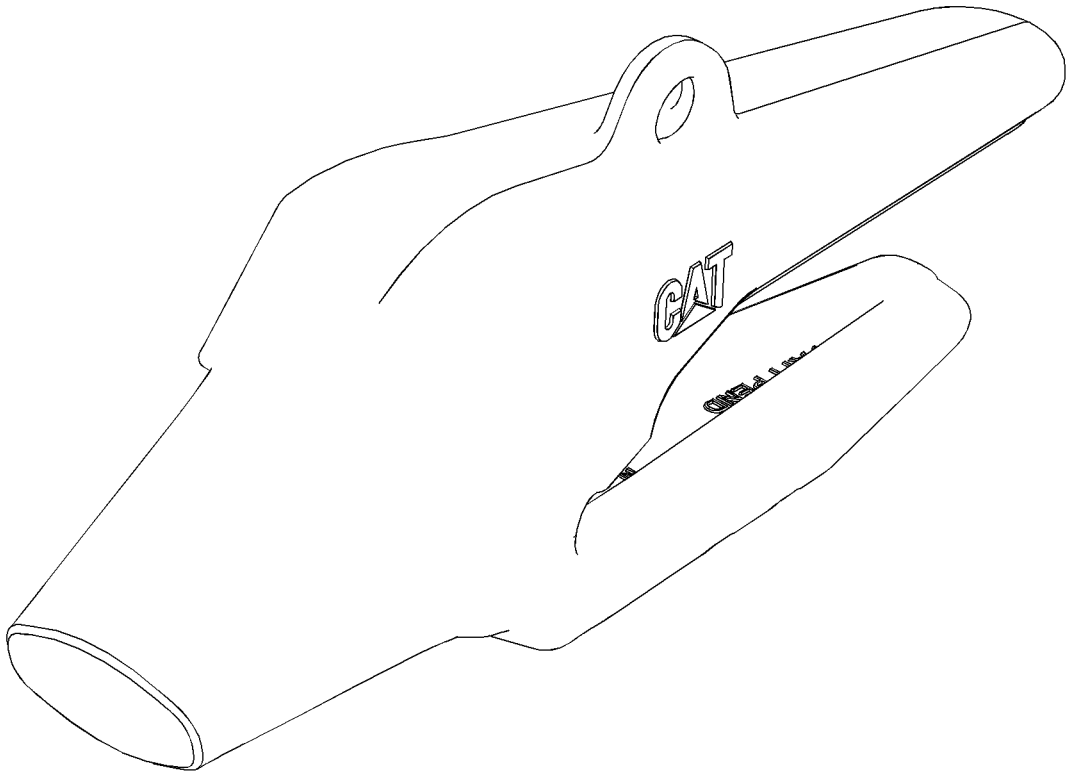

GRAPHIC #1 **<END>** g01174280

WORK TOOLS

232-2117 ADAPTER-TIP—FLUSH MOUNT

S/N: BXY1-UP
K-110
AN ATTACHMENT

SMCS-6803 **i02357695**

NOTE	REF NO	GRAPHIC REF	PART NUMBER	QTY	PART NAME 1 2 3 4 5 6 (PRODUCT LEVEL)	SEE PAGE
					(NO SERVICED PARTS)	

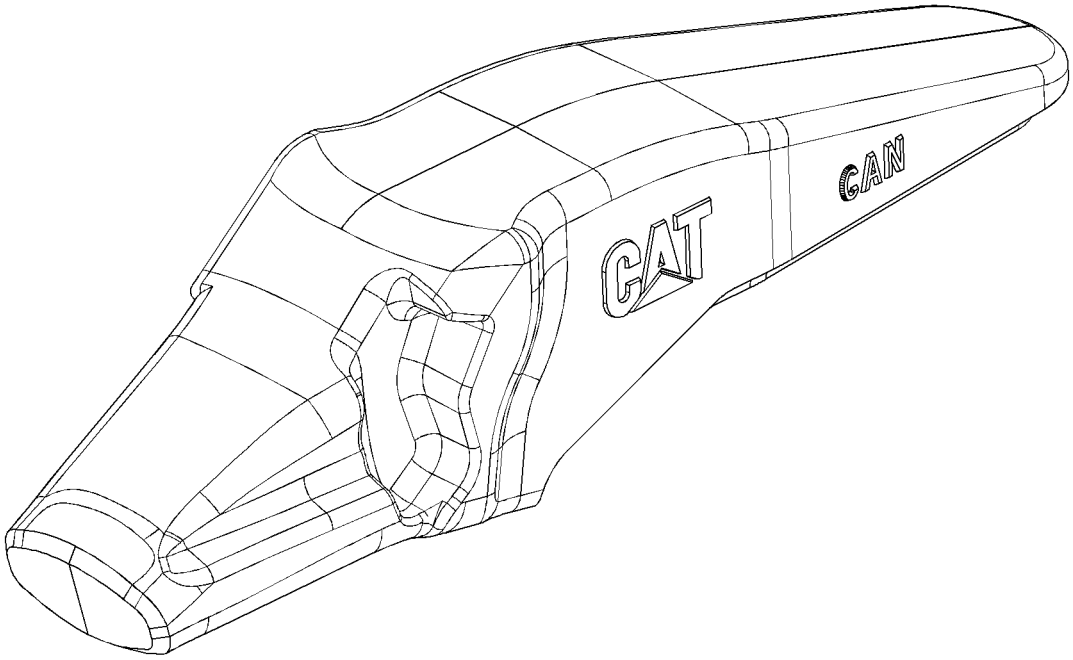

GRAPHIC #1 **<END>** g01139393

WORK TOOLS

232-2154 ADAPTER-TIP—FLUSH MOUNT

S/N: BXY1-UP
K-150
AN ATTACHMENT

SMCS-6803 **i02030448**

NOTE	REF NO	GRAPHIC REF	PART NUMBER	QTY	PART NAME 1 2 3 4 5 6 (PRODUCT LEVEL)	SEE PAGE
					(NO SERVICED PARTS)	

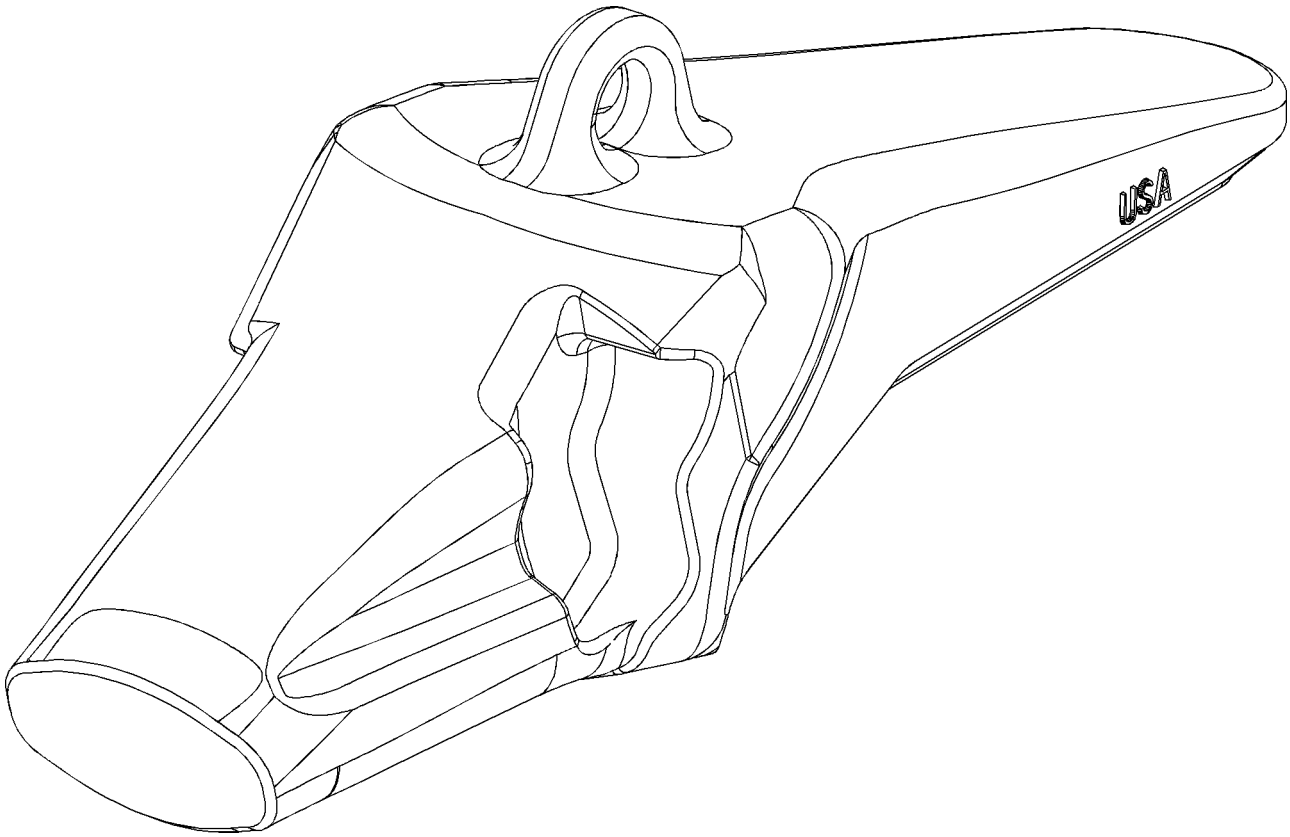

GRAPHIC #1 **<END>** g01047129

WORK TOOLS

233-7154 ADAPTER-TIP–2-STRAP, CENTER

S/N: BXY1-UP
K-150
FIELD INSTALLATION

SMCS-6803 **i02294167**

NOTE	REF NO	GRAPHIC REF	PART NUMBER	QTY	PART NAME 1 2 3 4 5 6 (PRODUCT LEVEL)	SEE PAGE
					(NO SERVICED PARTS)	

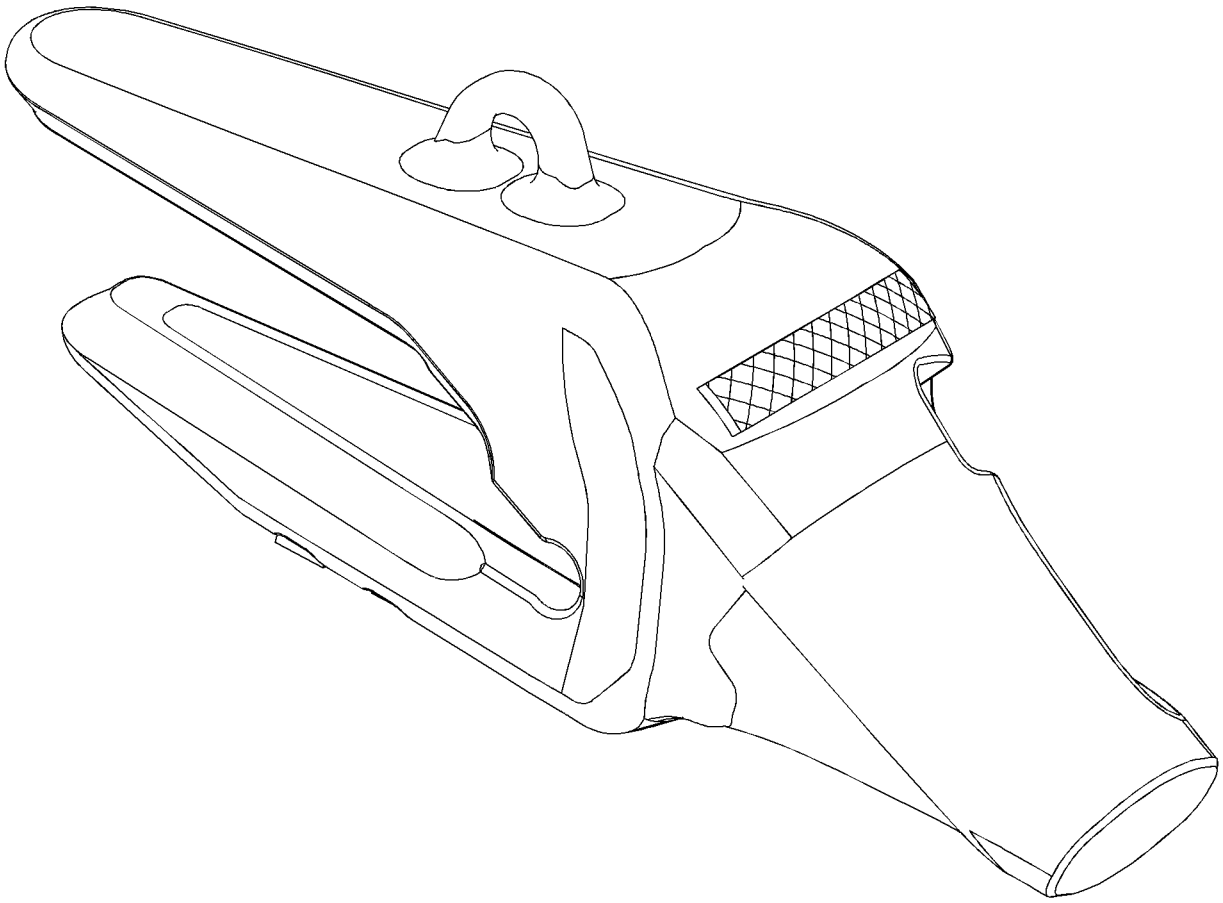

GRAPHIC #1 **<END>** g01167240

WORK TOOLS

233-7155 ADAPTER-TIP–2-STRAP, RH

S/N: BXY1-UP
K-150
FIELD INSTALLATION

SMCS-6803 **i02294168**

NOTE	REF NO	GRAPHIC REF	PART NUMBER	QTY	PART NAME 1 2 3 4 5 6 (PRODUCT LEVEL)	SEE PAGE
					(NO SERVICED PARTS)	

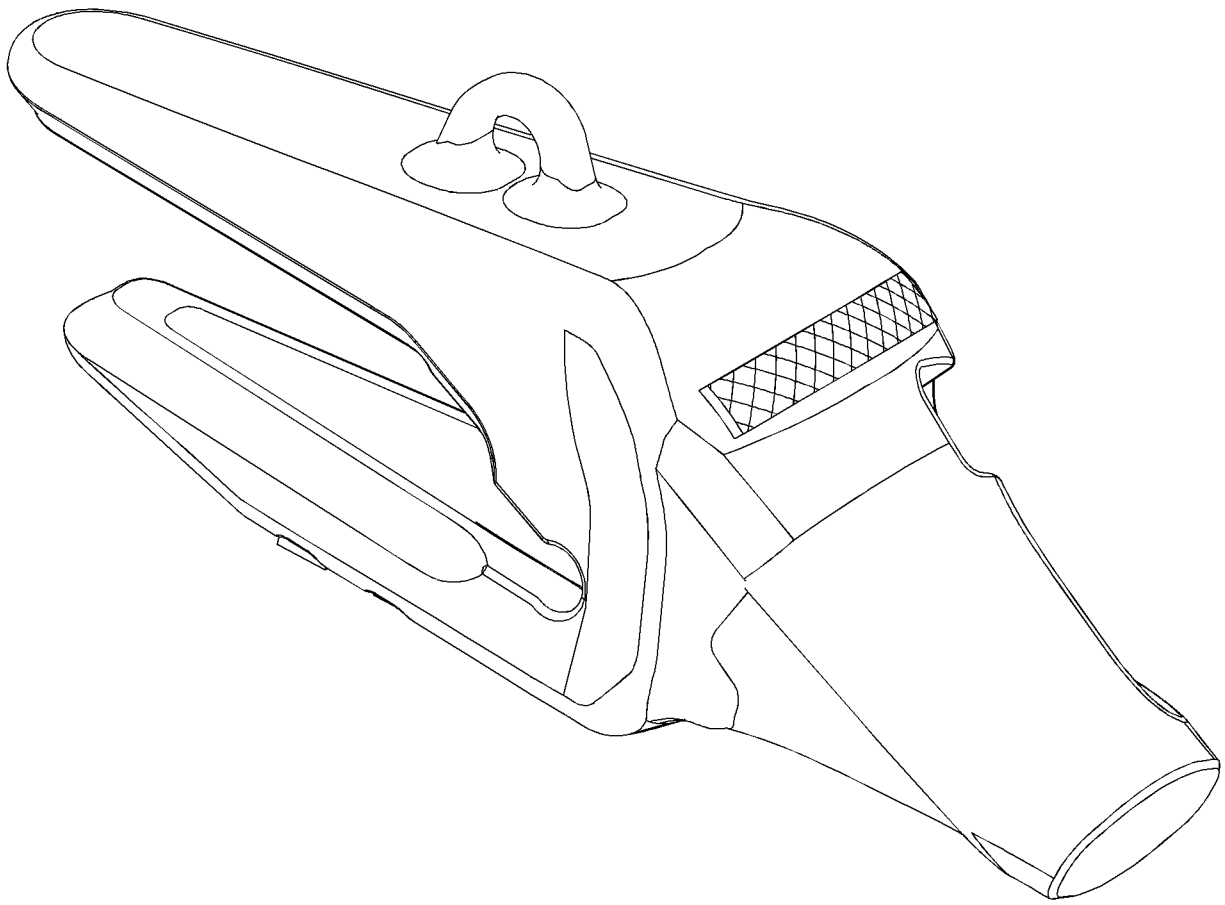

GRAPHIC #1 **<END>** g01167240

WORK TOOLS

233-7156 ADAPTER-TIP–2-STRAP, LH

S/N: BXY1-UP
K-150
FIELD INSTALLATION

SMCS-6803 **i02294641**

NOTE	REF NO	GRAPHIC REF	PART NUMBER	QTY	PART NAME 1 2 3 4 5 6 (PRODUCT LEVEL)	SEE PAGE
					(NO SERVICED PARTS)	

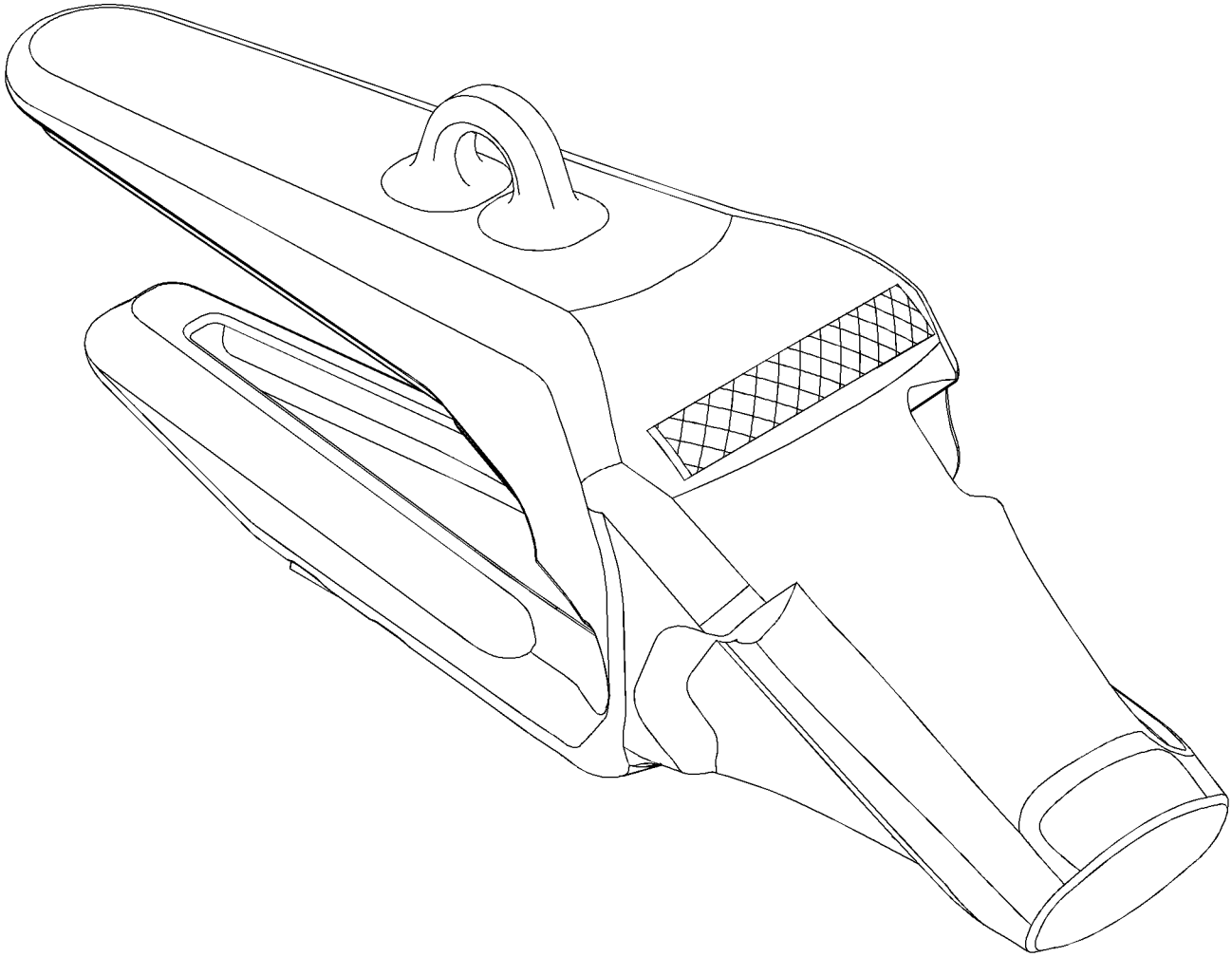

GRAPHIC #1 **<END>** g01166898

WORK TOOLS

210-1236 BUCKET AS-COAL

S/N: BXY1-UP
6.5-CU M (8.5-CU YDS)
PART OF 210-1235 BUCKET GP-COAL
AN ATTACHMENT

SMCS-6132 **i02540908**

NOTE	REF NO	GRAPHIC REF	PART NUMBER	QTY	PART NAME 1 2 3 4 5 6 (PRODUCT LEVEL)	SEE PAGE
	1	1	**2C-9259**	2	PLATE-IDENTIFICATION (CAT)	
	2	1	**135-6642**	1	PLATE-WEAR (LH)	
	3	1	**136-6195**	1	PLATE-WEAR (RH)	
	4	1	**136-6203**	1	PLATE-WEAR	
	5	1	**167-1278**	1	PLATE-WEAR	
	6	1	**172-4424**	6	PLATE	
	7	1	**172-4425**	2	PLATE	
	8	1	**172-4426**	1	PLATE	
	9	1	**172-4717**	1	PLATE	
	10	1	**172-4718**	1	PLATE	
	11	1	**175-2794**	1	HINGE AS (OUTER, LH)	
	12	1	**175-2795**	1	HINGE AS (OUTER, RH)	
	13	1	**180-3039**	1	HINGE AS (RH-INNER)	
	14	1	**180-3040**	1	HINGE AS (INNER, LH)	
	15	1	**187-2863**	1	PLATE	
	16	1	**187-2864**	1	PLATE	
	17	1	**204-0721**	1	EDGE AS	
	17A	1	**8E-0464**	8	ADAPTER	
	17B	1	**8P-9770**	1	PLATE	
	17C	1	**204-0722**	1	EDGE	
	18	1	*210-2037*	1	PLATE AS (RH)	
	18A	1	**193-1760**	1	PLATE	
	18B	1	**210-2145**	1	BAR	
	19	1	*210-2038*	1	PLATE AS (LH)	
	19A	1	**193-1760**	1	PLATE	
	19B	1	**210-2145**	1	BAR	

210-1236 **BUCKET AS-COAL** *(contd.)* **i02540908**

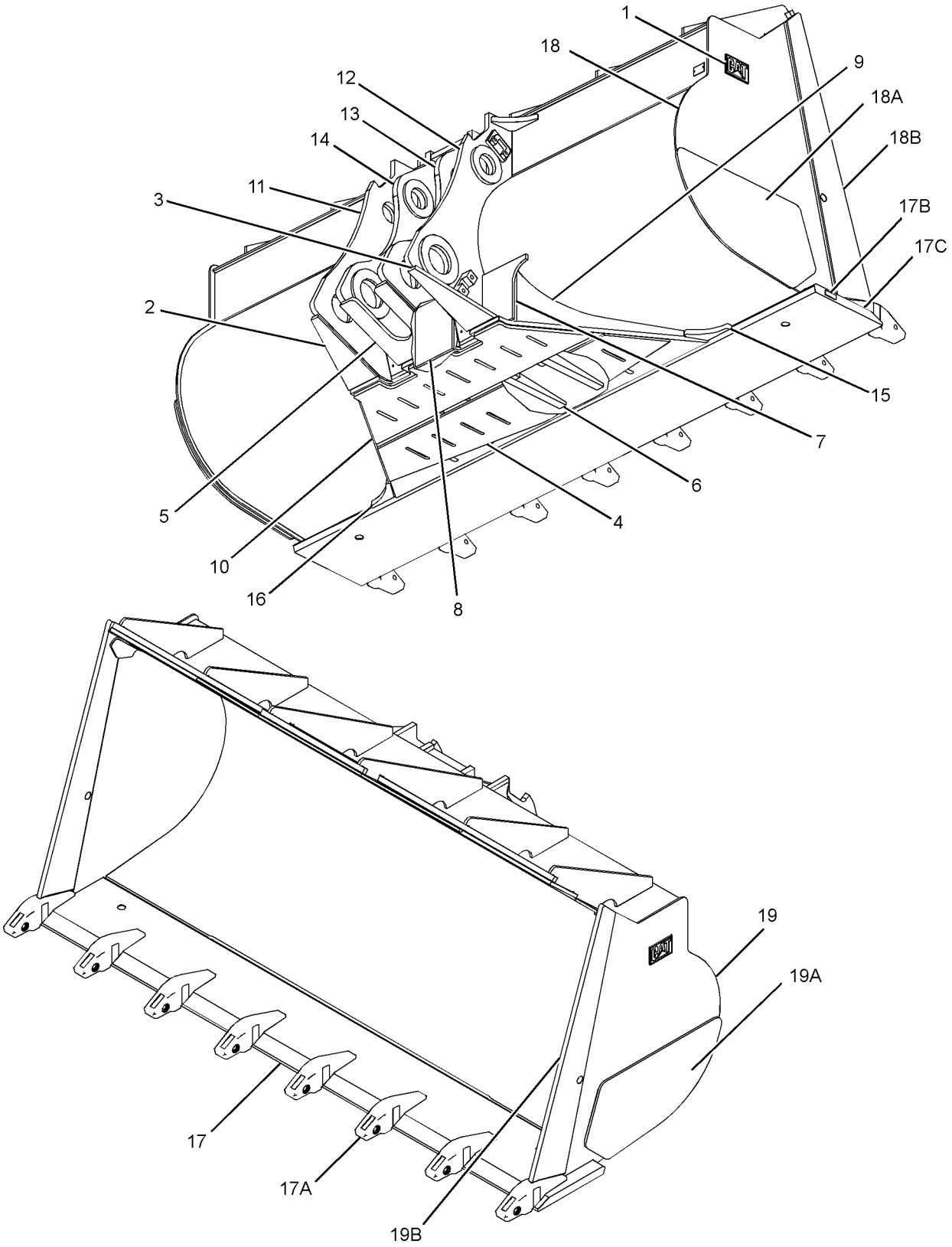

GRAPHIC #1 **<END>** g01284127

WORK TOOLS

246-2753 BUCKET AS-GENERAL PURPOSE

S/N: BXY1-UP
7.0-CU M (9.2 CU YD)
AN ATTACHMENT

SMCS-6101 **i02330166**

NOTE	REF NO	GRAPHIC REF	PART NUMBER	QTY	PART NAME 1 2 3 4 5 6 (PRODUCT LEVEL)	SEE PAGE
	1	1	**255-6692**	1	HINGE AS (OUTER, LH)	
	2	1	**255-6695**	1	HINGE AS (INNER, LH)	
	3	1	**255-6694**	1	HINGE AS (INNER, RH)	
	4	1	**255-6691**	1	HINGE AS (OUTER, RH)	
	5	1	**257-3667**	1	EDGE-CUTTING	
	6	1	*257-3673*	1	PLATE AS (LH)	
		1	**2C-9259**	1	PLATE-IDENTIFICATION (CAT)	
		1	**257-3669**	1	PLATE	
		1	**257-3671**	1	BAR	
	7	1	*257-3672*	1	PLATE AS (RH)	
		1	**2C-9259**	1	PLATE-IDENTIFICATION (CAT)	
		1	**257-3669**	1	PLATE	
		1	**257-3670**	1	BAR	
	8	1	**6I-8249**	1	CORNER (RH)	
	9	1	**6I-8250**	1	CORNER (LH)	
	10	1	*110-7592*	1	PLATE GP-CERTIFICATION	
		1	**8T-9530**	4	TACK-FASTENER	
		1	**137-4234**	1	PLATE-IDENTIFICATION (WORK TOOL)	
	11	1	**225-9482**	4	BAR	
	12	1	**225-9584**	2	PLATE	
	13	1	**225-9602**	2	PLATE	
	14	1	**228-4727**	2	PAD-RUBBER	
	15	1	**255-6711**	1	PLATE-WEAR	
	16	1	**255-6712**	1	PLATE-WEAR	
	17	1	**257-3651**	2	PLATE	
	18	1	**257-3655**	2	PLATE-WEAR	
	19	1	**257-3679**	1	PLATE-WEAR	

246-2753 BUCKET AS-GENERAL PURPOSE *(contd.)* **i02330166**

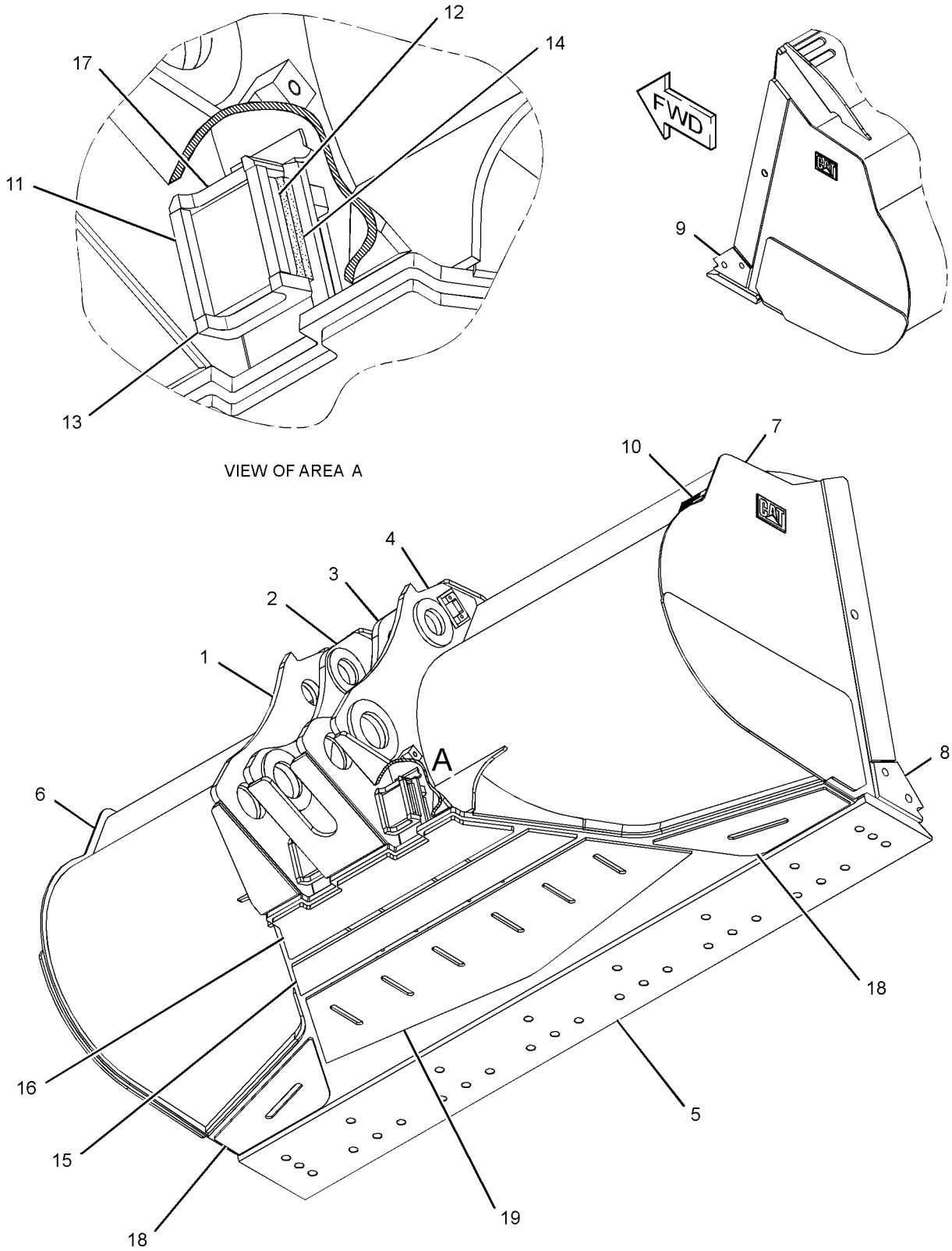

GRAPHIC #1 **<END>** g01178000

WORK TOOLS

265-8219 BUCKET AS-GENERAL PURPOSE

S/N: BXY1-UP
7.7 CU M(10 CU YD)
PART OF 265-8218 BUCKET GP-GENERAL PURPOSE
AN ATTACHMENT

SMCS-6101 **i02456188**

NOTE	REF NO	GRAPHIC REF	PART NUMBER	QTY	PART NAME 1 2 3 4 5 6 (PRODUCT LEVEL)	SEE PAGE
	1	1	**6I-8249**	1	CORNER (RH)	
	2	1	**6I-8250**	1	CORNER (LH)	
	3	1	**225-9482**	4	BAR	
	4	1	**225-9584**	2	PLATE	
	5	1	**225-9602**	2	PLATE	
	6	1	**228-4727**	2	PAD-RUBBER	
	7	1	**250-8402**	1	EDGE-CUTTING	
	8	1	**255-6691**	1	HINGE AS (OUTER, RH)	
	9	1	**255-6692**	1	HINGE AS (OUTER, LH)	
	10	1	**255-6694**	1	HINGE AS (INNER, RH)	
	11	1	**255-6695**	1	HINGE AS (INNER, LH)	
	12	1	**255-6711**	1	PLATE-WEAR	
	13	1	**255-6712**	1	PLATE-WEAR	
	14	1	**257-3651**	2	PLATE	
	15	1	**257-3655**	2	PLATE-WEAR	
	16	1	**257-3679**	1	PLATE-WEAR	
	17	1	**2C-9259**	2	PLATE-IDENTIFICATION (CAT)	
	18	1	**265-8220**	1	BAR	
	19	1	**265-8223**	2	PLATE-WEAR	
	20	1	**265-8221**	1	BAR	

265-8219 **BUCKET AS-GENERAL PURPOSE** *(contd.)* **i02456188**

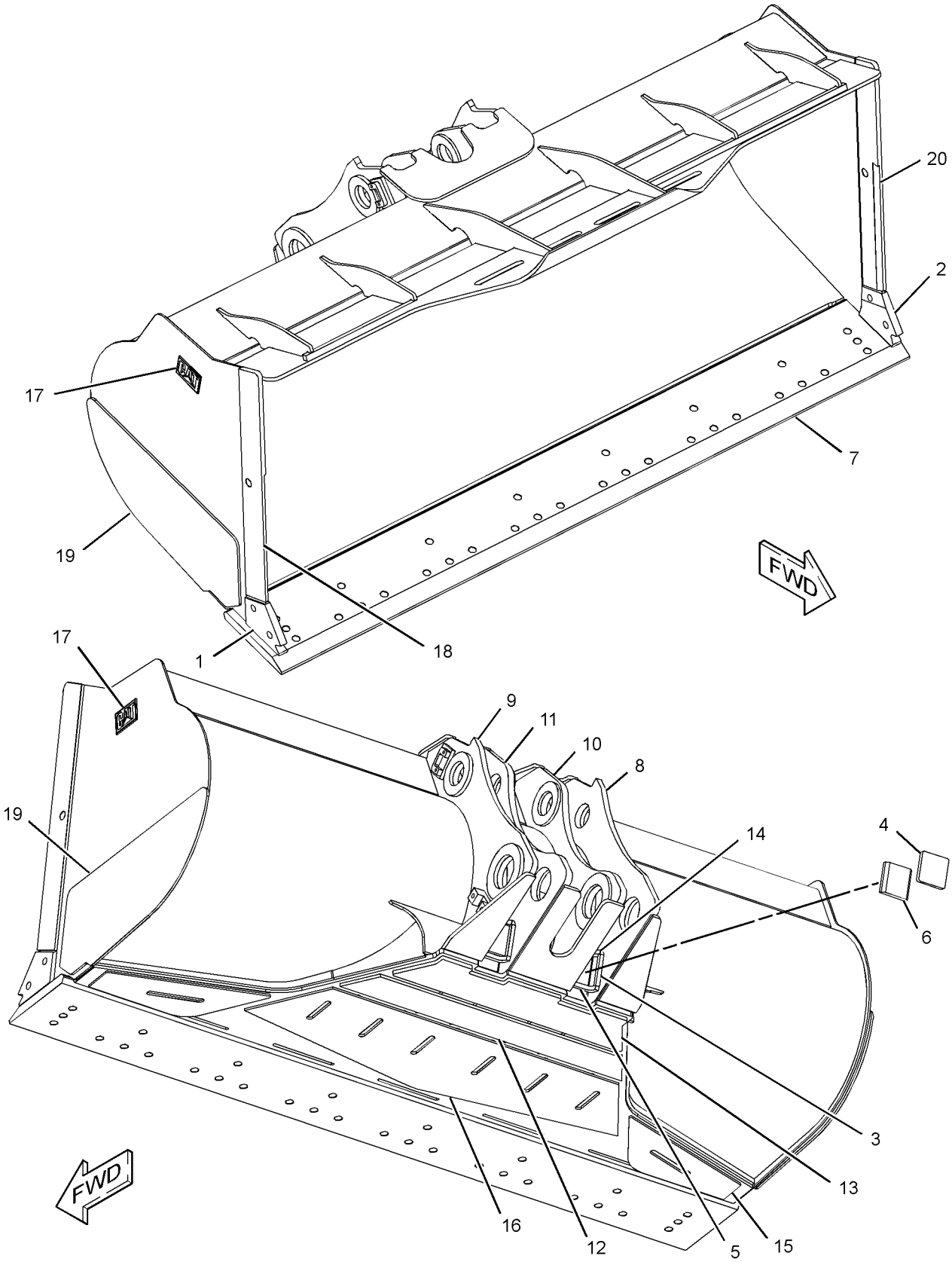

GRAPHIC #1 **<END>** g01229794

WORK TOOLS

236-4696 BUCKET AS-ROCK

S/N: BXY1-UP
6.9 CU M (9.0 CU YD)
AN ATTACHMENT

SMCS-6102 **i02357089**

NOTE	REF NO	GRAPHIC REF	PART NUMBER	QTY	PART NAME 1 2 3 4 5 6 (PRODUCT LEVEL)	SEE PAGE
	1	1	**214-5431**	1	HINGE AS (INNER, LH)	
	2	1	**214-5432**	1	HINGE AS (INNER, RH)	
	3	1	*214-6364*	1	PLATE AS (RH)	
		1	**214-6367**	1	BAR	
		1	**216-3683**	1	PLATE	
	4	1	*214-6365*	1	PLATE AS (LH)	
		1	**214-6367**	1	BAR	
		1	**216-3683**	1	PLATE	
	5	1	**216-3681**	1	PLATE-WEAR	
	6	1	**225-9482**	4	BAR	
	7	1	**225-9584**	2	PLATE	
	8	1	**225-9602**	4	PLATE	
	9	1	**228-4727**	2	PAD-RUBBER	
	10	1	**229-8429**	2	BEARING	
	11	1	**229-8435**	2	BEARING	
	12	1	**236-4674**	1	PLATE AS-WEAR (RH)	
	13	1	**236-4676**	1	PLATE AS-WEAR (CENTER)	
	14	1	**236-4693**	1	EDGE AS	
		1	**8P-9770**	1	PLATE	
		1	**232-2114**	8	ADAPTER-TIP (K-110, 2-STRAP, CENTER)	
	15	1	**236-4694**	1	HINGE AS (OUTER, RH)	
	16	1	**236-4695**	1	HINGE AS (OUTER, LH)	
	17	1	**236-7753**	2	PLATE-WEAR	
	18	1	**236-4675**	1	PLATE AS-WEAR (LH)	
	19	1	**236-4689**	1	PLATE AS-WEAR (RH)	
	20	1	**236-4690**	1	PLATE AS-WEAR (LH)	

236-4696 **BUCKET AS-ROCK** *(contd.)* **i02357089**

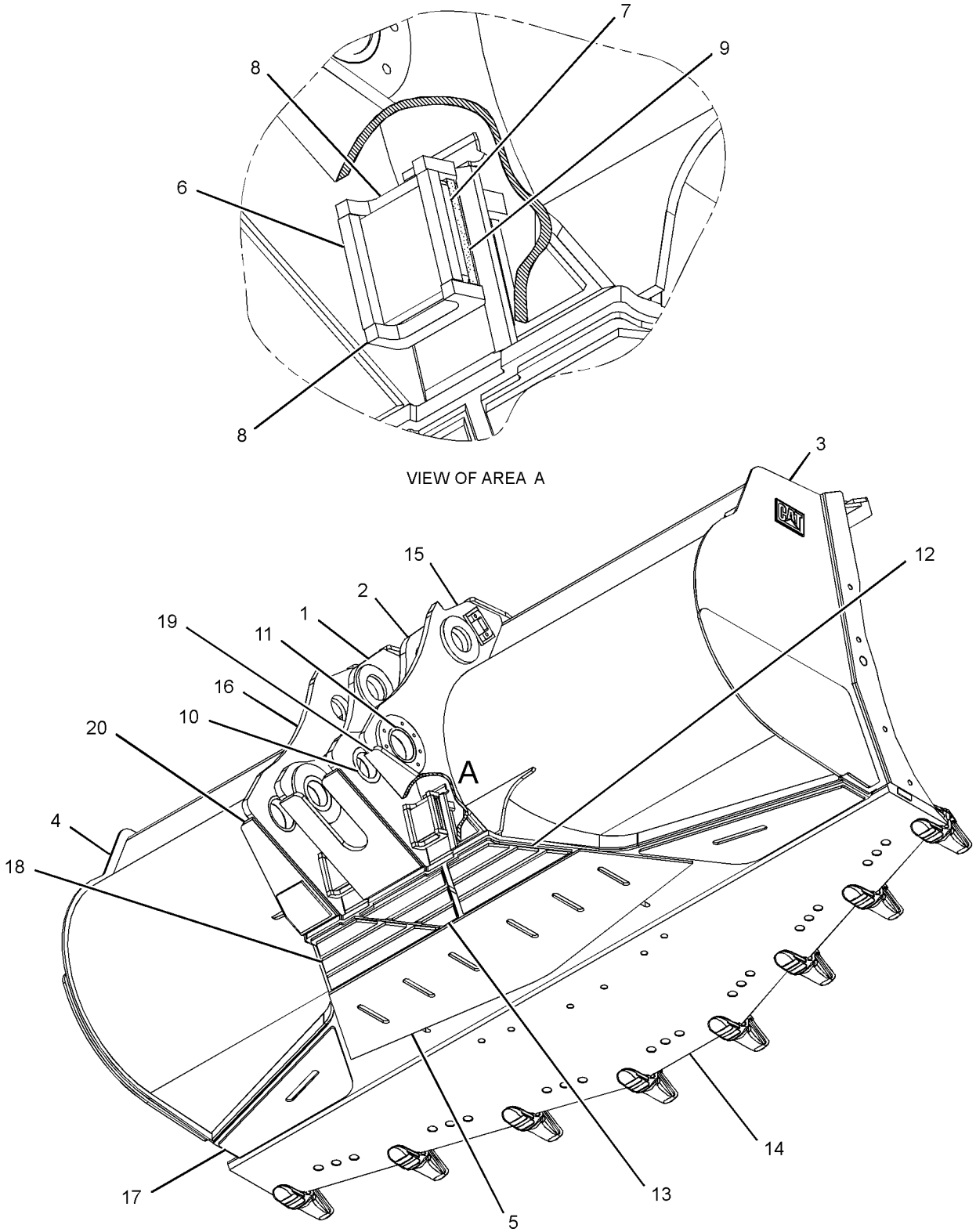

GRAPHIC #1 **<END>** g01177352

WORK TOOLS

246-2755 BUCKET AS-ROCK

S/N: BXY1-UP
6.9-CU M (9.0-CU YD)
PART OF 246-2754 BUCKET GP-ROCK
AN ATTACHMENT

SMCS-6102 **i02822654**

NOTE	REF NO	GRAPHIC REF	PART NUMBER	QTY	PART NAME 1 2 3 4 5 6 (PRODUCT LEVEL)	SEE PAGE
	1	1	**149-5915**	1	EDGE-CUTTING	
	2	1	**257-3651**	2	PLATE	
	3	1	**225-9482**	4	BAR	
	4	1	**225-9584**	2	PLATE	
	5	1	**225-9602**	2	PLATE	
	6	1	**228-4727**	2	PAD-RUBBER	
	7	1	**236-7753**	2	PLATE-WEAR	
	8	1	*240-9087*	1	PLATE AS (RH)	
	8A	1	**2C-9259**	1	PLATE-IDENTIFICATION (CAT)	
	8B	1	**240-9083**	1	BAR	
	8C	1	**240-9085**	1	PLATE-WEAR	
	9	1	*240-9088*	1	PLATE AS (LH)	
	9A	1	**2C-9259**	1	PLATE-IDENTIFICATION (CAT)	
	9B	1	**240-9083**	1	BAR	
	9C	1	**240-9085**	1	PLATE-WEAR	
	10	1	**255-6691**	1	HINGE AS (OUTER, RH)	
	11	1	**255-6692**	1	HINGE AS (OUTER, LH)	
	12	1	**255-6694**	1	HINGE AS (INNER, RH)	
	13	1	**255-6695**	1	HINGE AS (INNER, LH)	
	14	1	**255-6710**	1	PLATE-WEAR	
	15	1	**255-6711**	1	PLATE-WEAR	
	16	1	**255-6712**	1	PLATE-WEAR	

246-2755 **BUCKET AS-ROCK** *(contd.)* **i02822654**

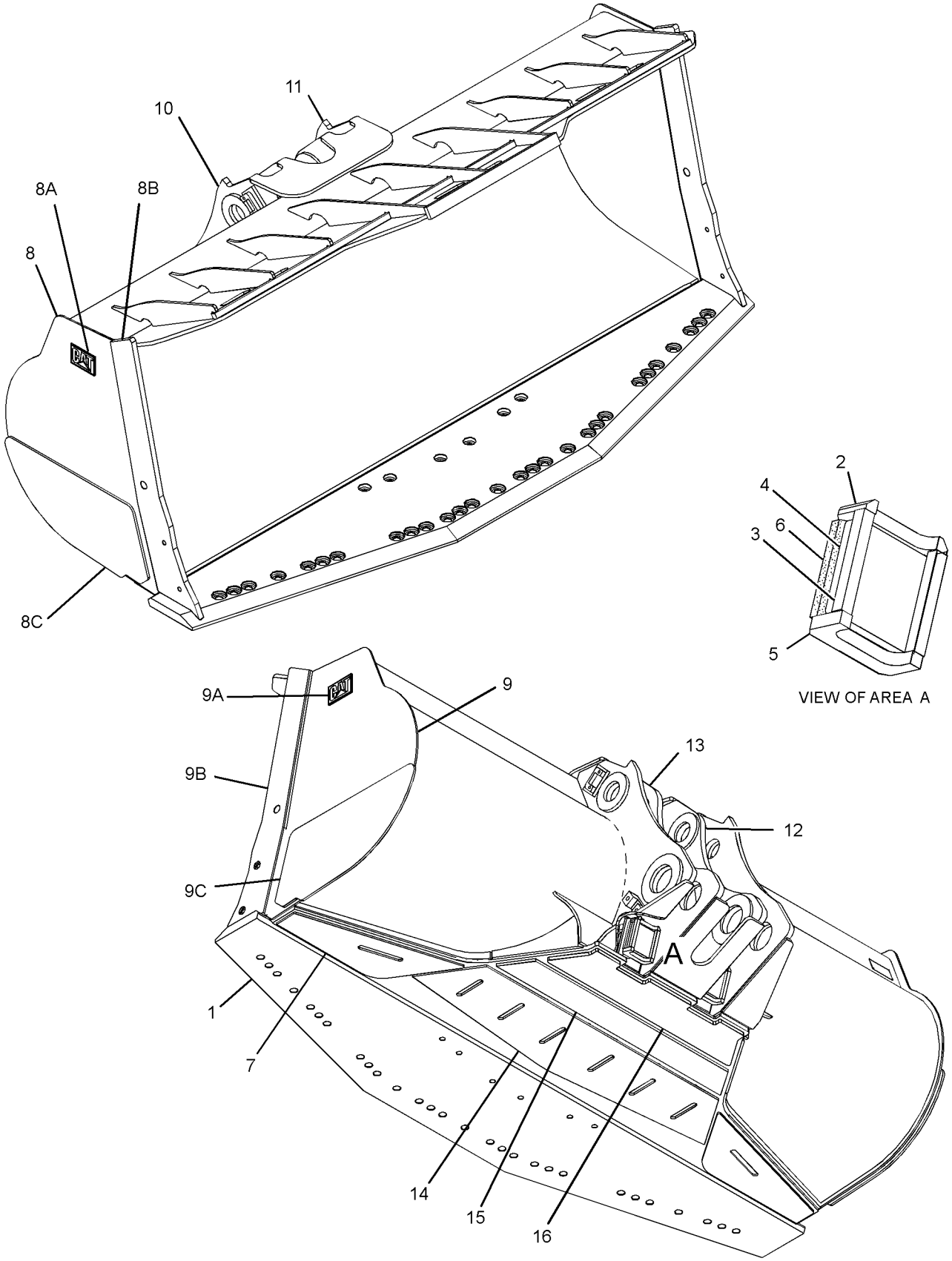

GRAPHIC #1 **<END>** g01417494

WORK TOOLS

246-2756 BUCKET AS-ROCK

S/N: BXY1-UP
6.3-CU M(8.2-CU YD)
AN ATTACHMENT

SMCS-6102 **i02330185**

NOTE	REF NO	GRAPHIC REF	PART NUMBER	QTY	PART NAME 1 2 3 4 5 6 (PRODUCT LEVEL)	SEE PAGE
	1	1	**255-6692**	1	HINGE AS (OUTER, LH)	
	2	1	**255-6695**	1	HINGE AS (INNER, LH)	
	3	1	**255-6694**	1	HINGE AS (INNER, RH)	
	4	1	**255-6691**	1	HINGE AS (OUTER, RH)	
	5	1	**257-3649**	1	EDGE AS	
		1	**8P-9770**	1	PLATE	
		1	**232-2114**	8	ADAPTER-TIP (K-110, 2-STRAP, CENTER)	
	6	1	*257-3665*	1	PLATE AS	
		1	**2C-9259**	1	PLATE-IDENTIFICATION (CAT)	
		1	**239-0245**	1	PLATE	
		1	**257-3663**	1	BAR	
	7	1	*257-3664*	1	PLATE AS	
		1	**2C-9259**	1	PLATE-IDENTIFICATION (CAT)	
		1	**239-0245**	1	PLATE	
		1	**257-3663**	1	BAR	
	8	1	*110-7592*	1	PLATE GP-CERTIFICATION	
		1	**8T-9530**	4	TACK-FASTENER	
		1	**137-4234**	1	PLATE-IDENTIFICATION (WORK TOOL)	
	9	1	**225-9482**	4	BAR	
	10	1	**225-9584**	2	PLATE	
	11	1	**225-9602**	2	PLATE	
	12	1	**228-4727**	2	PAD-RUBBER	
	13	1	**255-6710**	1	PLATE-WEAR	
	14	1	**255-6711**	1	PLATE-WEAR	
	15	1	**255-6712**	1	PLATE-WEAR	
	16	1	**257-3651**	2	PLATE	
	17	1	**257-3655**	2	PLATE-WEAR	

246-2756 **BUCKET AS-ROCK** *(contd.)* **i02330185**

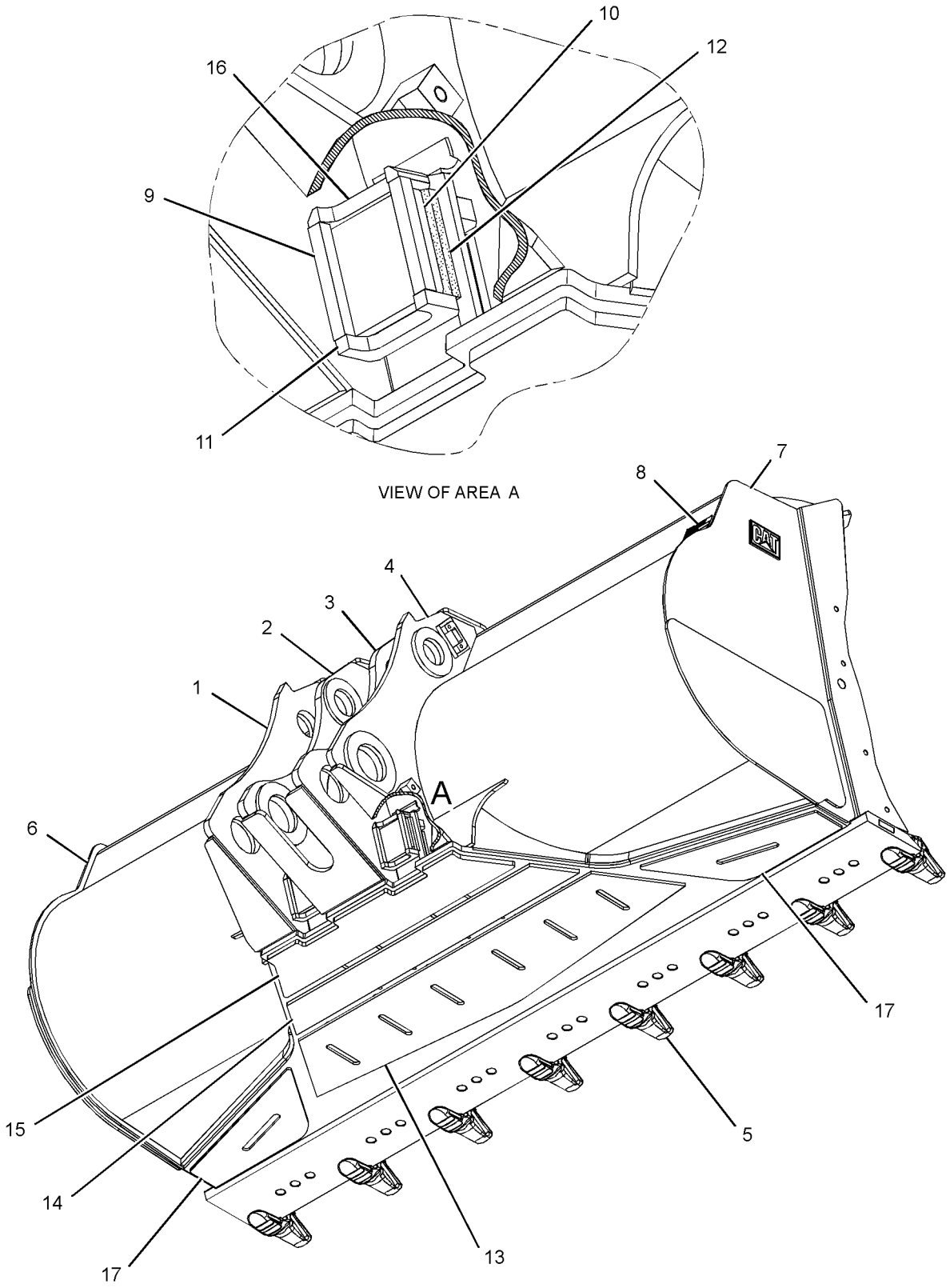

GRAPHIC #1 **<END>** g01175025

WORK TOOLS

246-2757 BUCKET AS-ROCK

S/N: BXY1-UP
6.7-CU M (8.75-CU YD)
AN ATTACHMENT

SMCS-6102 **i02822655**

NOTE	REF NO	GRAPHIC REF	PART NUMBER	QTY	PART NAME 1 2 3 4 5 6 (PRODUCT LEVEL)	SEE PAGE
	1	1	**255-6692**	1	HINGE AS (OUTER, LH)	
	2	1	**255-6695**	1	HINGE AS (INNER, LH)	
	3	1	**255-6691**	1	HINGE AS (OUTER, RH)	
	4	1	**255-6694**	1	HINGE AS (INNER, RH)	
	5	1	**246-2766**	1	EDGE AS	
	5A	1	**232-2114**	8	ADAPTER-TIP (K-110, 2-STRAP, CENTER)	
	6	1	*239-0262*	1	PLATE AS (LH)	
	6A	1	**2C-9259**	1	PLATE-IDENTIFICATION (CAT)	
	6B	1	**239-0245**	1	PLATE	
	6C	1	**239-0258**	1	BAR	
	7	1	*239-0261*	1	PLATE AS (RH)	
	7A	1	**2C-9259**	1	PLATE-IDENTIFICATION (CAT)	
	7B	1	**239-0245**	1	PLATE	
	7C	1	**239-0258**	1	BAR	
	9	1	**225-9482**	4	BAR	
	10	1	**225-9584**	2	PLATE	
	11	1	**225-9602**	2	PLATE	
	12	1	**228-4727**	2	PAD-RUBBER	
	13	1	**255-6710**	1	PLATE-WEAR	
	14	1	**255-6711**	1	PLATE-WEAR	
	15	1	**255-6712**	1	PLATE-WEAR	
	16	1	**257-3651**	2	PLATE	
	17	1	**257-3655**	2	PLATE-WEAR	

246-2757 BUCKET AS-ROCK *(contd.)* **i02822655**

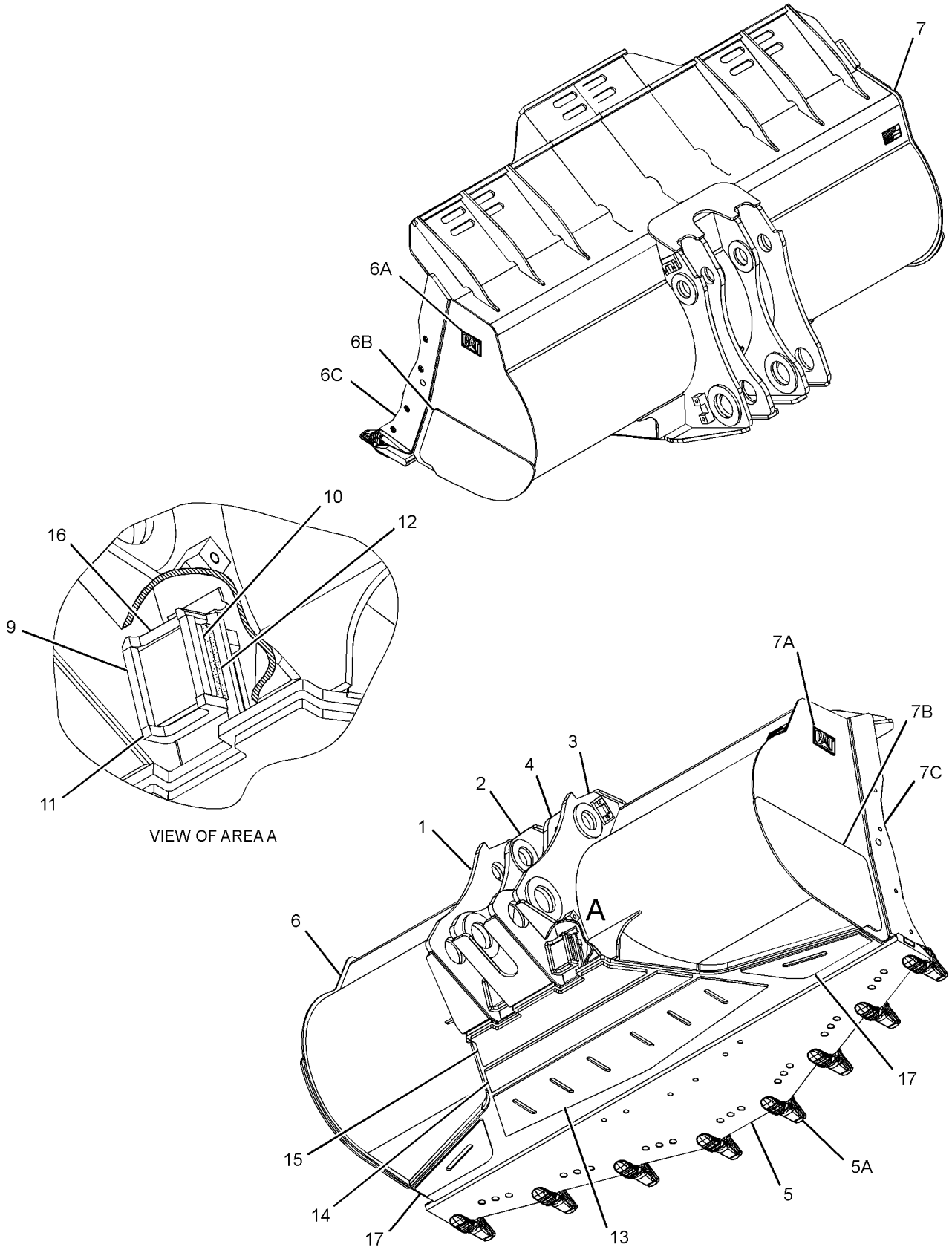

GRAPHIC #1 **<END>** g01417534

WORK TOOLS

246-2765 BUCKET AS-ROCK

S/N: BXY1-UP
6.9-CU M (9.0 CU YD)
AN ATTACHMENT

SMCS-6102 **i02822657**

NOTE	REF NO	GRAPHIC REF	PART NUMBER	QTY	PART NAME 1 2 3 4 5 6 (PRODUCT LEVEL)	SEE PAGE
	1	1	**255-6692**	1	HINGE AS (OUTER, LH)	
	1A	1	**4E-5591**	1	RETAINER	
	2	1	**255-6695**	1	HINGE AS (INNER, LH)	
	3	1	**255-6694**	1	HINGE AS (INNER, RH)	
	4	1	**255-6691**	1	HINGE AS (OUTER, RH)	
	4A	1	**4E-5591**	1	RETAINER	
	5	1	**246-2764**	1	EDGE AS	
	5A	1	**232-2114**	8	ADAPTER-TIP (K-110, 2-STRAP, CENTER)	
	7	1	*214-6364*	1	PLATE AS (RH)	
	7A	1	**214-6367**	1	BAR	
	7B	1	**216-3683**	1	PLATE	
	7C	1	**2C-9259**	1	PLATE-IDENTIFICATION (CAT)	
	8	1	*214-6365*	1	PLATE AS (LH)	
	8A	1	**214-6367**	1	BAR	
	8B	1	**216-3683**	1	PLATE	
	8C	1	**2C-9259**	1	PLATE-IDENTIFICATION (CAT)	
	9	1	**225-9482**	4	BAR	
	10	1	**225-9584**	2	PLATE	
	11	1	**225-9602**	2	PLATE	
	12	1	**228-4727**	2	PAD-RUBBER	
	13	1	**236-7753**	2	PLATE-WEAR	
	14	1	**255-6710**	1	PLATE-WEAR	
	15	1	**255-6711**	1	PLATE-WEAR	
	16	1	**255-6712**	1	PLATE-WEAR	
	17	1	**257-3651**	2	PLATE	

246-2765 **BUCKET AS-ROCK** *(contd.)* **i02822657**

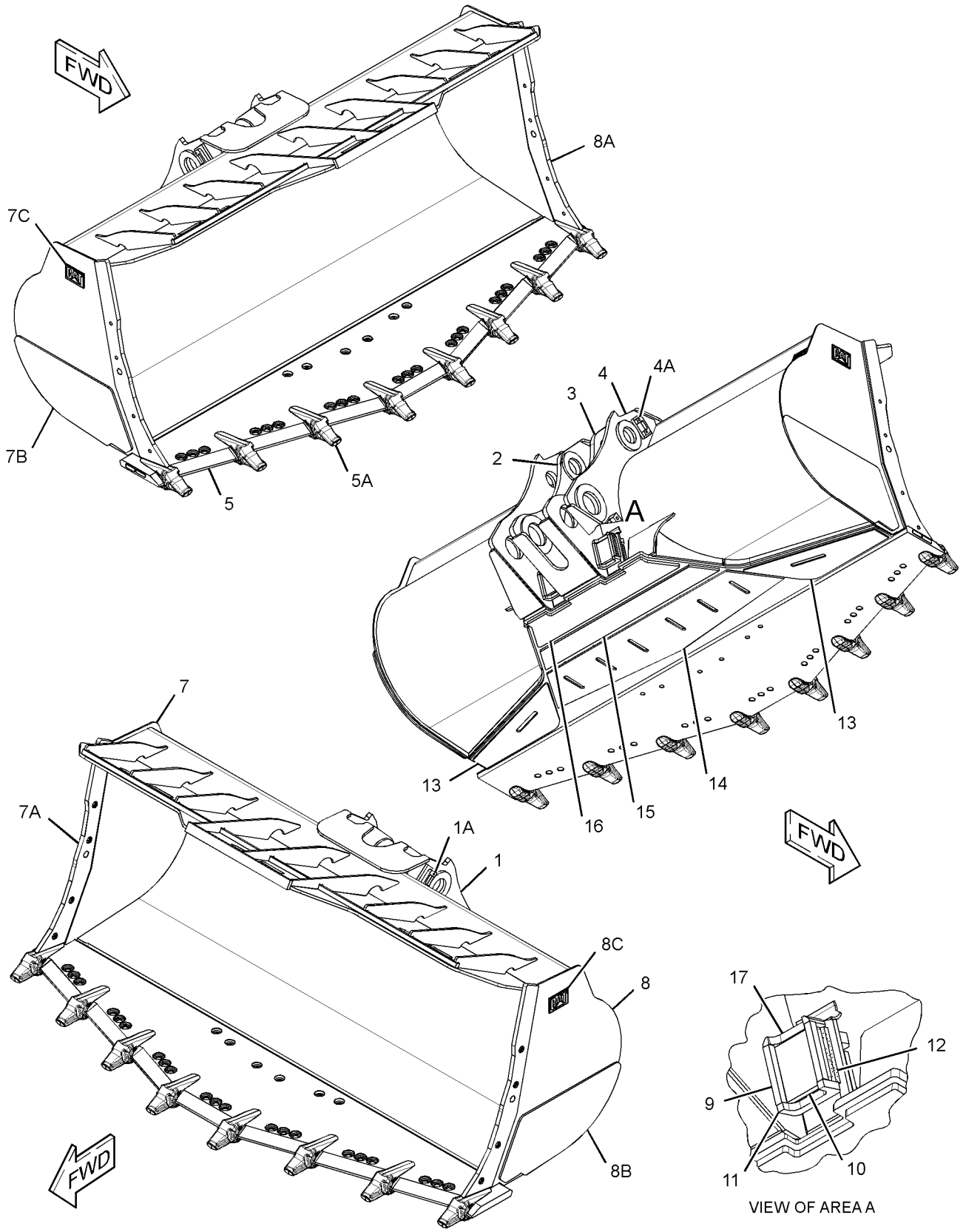

GRAPHIC #1 **<END>** g01408805

WORK TOOLS

246-2767 BUCKET AS-ROCK

S/N: BXY1-UP
6.4-CU M (8.33-CU YD)
AN ATTACHMENT

SMCS-6102 **i02822658**

NOTE	REF NO	GRAPHIC REF	PART NUMBER	QTY	PART NAME 1 2 3 4 5 6 (PRODUCT LEVEL)	SEE PAGE
	1	1	**255-6692**	1	HINGE AS (OUTER, LH)	
	1A	1	**4E-5591**	1	RETAINER	
	2	1	**255-6695**	1	HINGE AS (INNER, LH)	
	3	1	**255-6691**	1	HINGE AS (OUTER, RH)	
	3A	1	**4E-5591**	1	RETAINER	
	4	1	**255-6694**	1	HINGE AS (INNER, RH)	
	5	1	**246-2766**	1	EDGE AS	
	5A	1	**232-2114**	8	ADAPTER-TIP (K-110, 2-STRAP, CENTER)	
	6	1	*239-0262*	1	PLATE AS (LH)	
	6A	1	**2C-9259**	1	PLATE-IDENTIFICATION (CAT)	
	6B	1	**239-0245**	1	PLATE	
	6C	1	**239-0258**	1	BAR	
	7	1	*239-0261*	1	PLATE AS (RH)	
	7A	1	**2C-9259**	1	PLATE-IDENTIFICATION (CAT)	
	7B	1	**239-0245**	1	PLATE	
	7C	1	**239-0258**	1	BAR	
	9	1	**225-9482**	4	BAR	
	10	1	**225-9584**	2	PLATE	
	11	1	**225-9602**	2	PLATE	
	12	1	**228-4727**	2	PAD-RUBBER	
	13	1	**255-6710**	1	PLATE-WEAR	
	14	1	**255-6711**	1	PLATE-WEAR	
	15	1	**255-6712**	1	PLATE-WEAR	
	16	1	**257-3651**	2	PLATE	
	17	1	**257-3655**	2	PLATE-WEAR	

246-2767 BUCKET AS-ROCK *(contd.)* **i02822658**

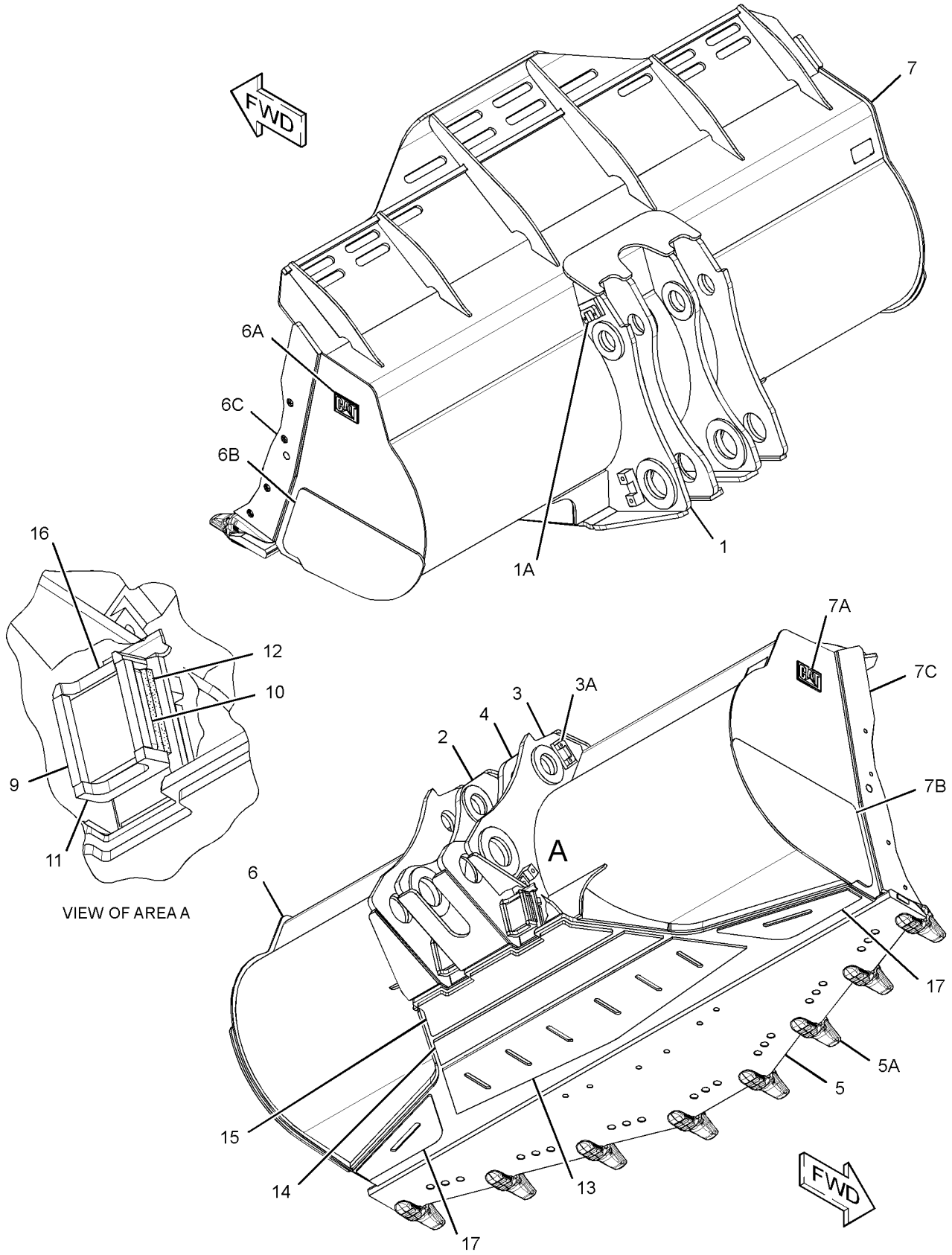

GRAPHIC #1 **<END>** g01409455

WORK TOOLS

246-2770 BUCKET AS-ROCK

S/N: BXY1-UP
6.4-CU M (8.33-CU YD)
PART OF 246-2769 BUCKET GP-ROCK
AN ATTACHMENT

SMCS-6102 **i02661645**

NOTE	REF NO	GRAPHIC REF	PART NUMBER	QTY	PART NAME 1 2 3 4 5 6 (PRODUCT LEVEL)	SEE PAGE
	1	1	**225-9482**	4	BAR	
	2	1	**225-9584**	2	PLATE	
	3	1	**225-9602**	2	PLATE	
	4	1	**228-4727**	2	PAD-RUBBER	
	5	1	**257-3651**	2	PLATE	
	6	2	**283-1938**	3	PLATE-WEAR	
	7	2	**283-1937**	1	PLATE-WEAR	
	8	2	**240-7983**	2	PLATE-WEAR	
	9	2	**246-2768**	1	EDGE AS	
		2	**275-5465**	2	BLOCK-WEAR	
		2	**223-8134**	7	ADAPTER-TIP (K-130, 2-STRAP, CENTER)	
	10	2	**255-6691**	1	HINGE AS (OUTER, RH)	
	11	2	**255-6692**	1	HINGE AS (OUTER, LH)	
	12	2	**255-6694**	1	HINGE AS (INNER, RH)	
	13	2	**255-6695**	1	HINGE AS (INNER, LH)	
	14	2	**255-6710**	1	PLATE-WEAR	
	15	2	**255-6711**	1	PLATE-WEAR	
	16	2	**255-6712**	1	PLATE-WEAR	
	17	2	**257-3655**	2	PLATE-WEAR	
	18	2	*257-3658*	1	PLATE AS (RH) (RH)	
	18A	2	**2C-9259**	1	PLATE-IDENTIFICATION (CAT)	
	18B	2	**240-0286**	1	PLATE	
	18C	2	**257-3657**	1	BAR	
	19	2	*257-3659*	1	PLATE AS (LH) (LH)	
	19A	2	**2C-9259**	1	PLATE-IDENTIFICATION (CAT)	
	19B	2	**240-0286**	1	PLATE	
	19C	2	**257-3657**	1	BAR	
	20	2	**257-3660**	2	PLATE	

246-2770 **BUCKET AS-ROCK** *(contd.)* **i02661645**

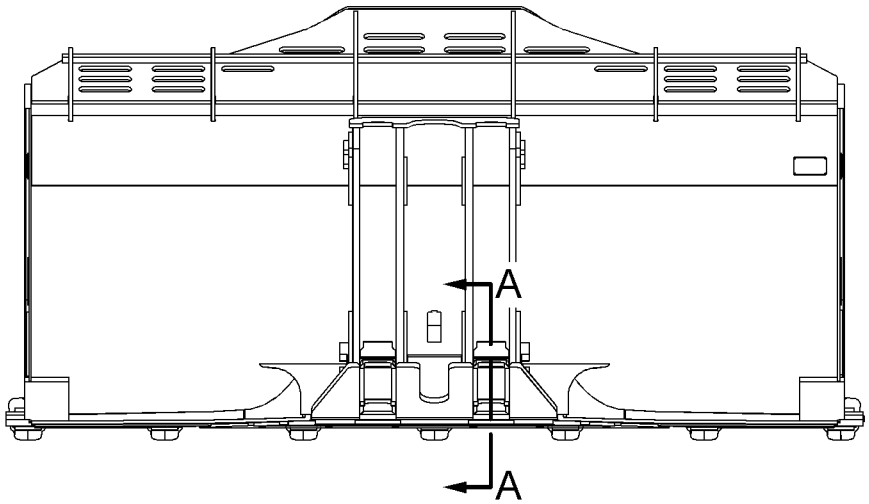

REAR VIEW

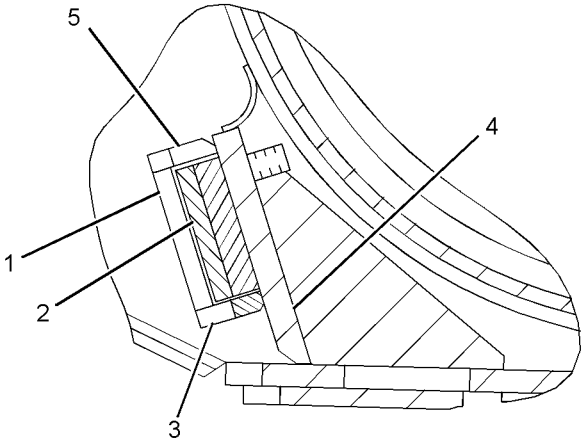

SECTION A-A

GRAPHIC #1 g01174530

246-2770 **BUCKET AS-ROCK** *(contd.)* **i02661645**

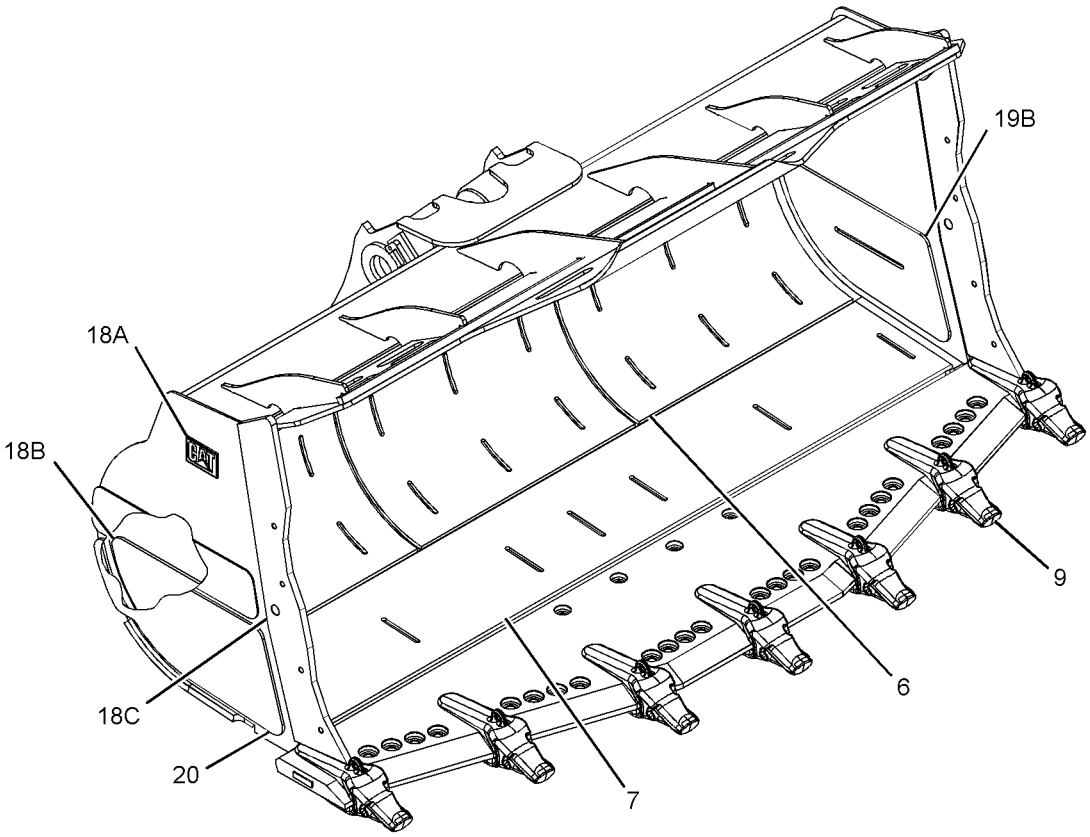

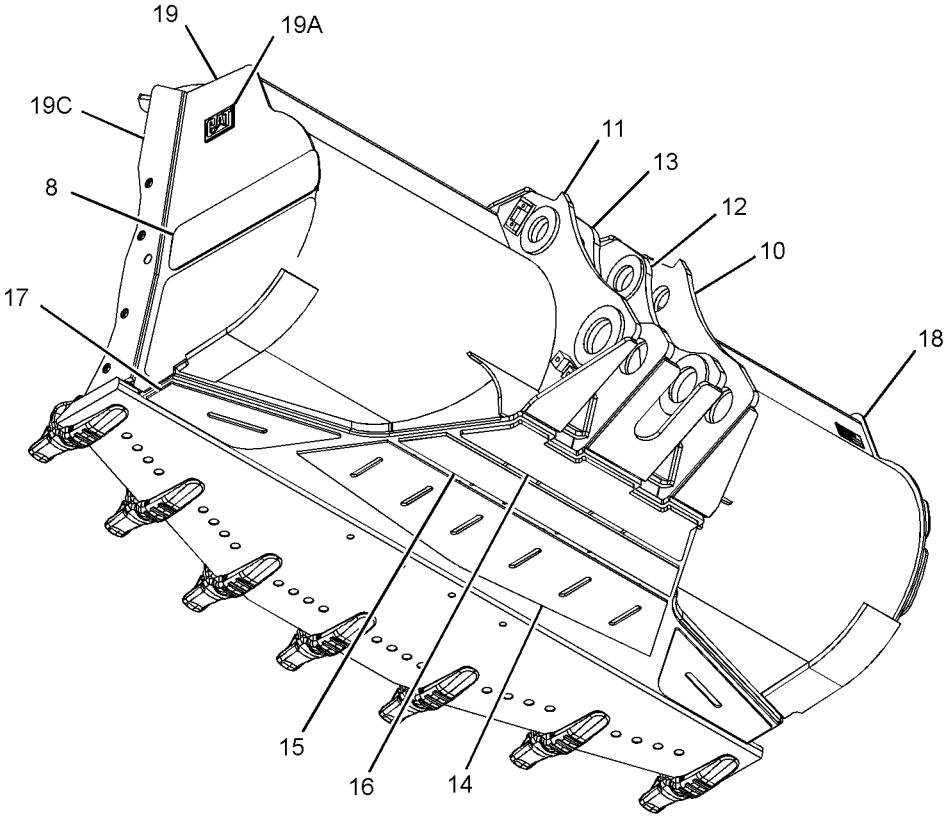

GRAPHIC #2 **<END>** g01359884

WORK TOOLS

246-2772 BUCKET AS-ROCK

S/N: BXY1-UP
6.4-CU M (8.33-CU YD)
PART OF 246-2771 BUCKET GP-ROCK
AN ATTACHMENT

SMCS-6102 **i02735823**

NOTE	REF NO	GRAPHIC REF	PART NUMBER	QTY	PART NAME 1 2 3 4 5 6 (PRODUCT LEVEL)	SEE PAGE
	1	1	**225-9482**	4	BAR	
	2	1	**225-9584**	2	PLATE	
	3	1	**225-9602**	2	PLATE	
	4	1	**228-4727**	2	PAD-RUBBER	
	5	1	**240-0284**	3	PLATE-WEAR	
	6	1	**240-0285**	1	PLATE-WEAR	
	7	1	**240-7983**	2	PLATE-WEAR	
	8	1	**255-6691**	1	HINGE AS (OUTER, RH)	
	9	1	**255-6692**	1	HINGE AS (OUTER, LH)	
	10	1	**255-6694**	1	HINGE AS (INNER, RH)	
	11	1	**255-6695**	1	HINGE AS (INNER, LH)	
	12	1	**257-3651**	2	PLATE	
	13	1	**255-6710**	1	PLATE-WEAR	
	14	1	**255-6711**	1	PLATE-WEAR	
	15	1	**255-6712**	1	PLATE-WEAR	
	16	1	**257-3655**	2	PLATE-WEAR	
	17	1	**257-3660**	2	PLATE	
	18	1	**257-3695**	1	EDGE AS	
		1	**8P-9770**	1	PLATE	
		1	**232-0138**	5	ADAPTER-TIP (K-130, CENTER)	
		1	**232-0139**	2	ADAPTER-TIP (K-130, CORNER)	
	19	1	*257-3698*	1	PLATE AS (LH)	
	19A	1	**2C-9259**	1	PLATE-IDENTIFICATION (CAT)	
	19B	1	**240-0286**	1	PLATE	
	19C	1	**278-8186**	1	BAR	
	20	1	*257-3697*	1	PLATE AS (RH)	
	20A	1	**2C-9259**	1	PLATE-IDENTIFICATION (CAT)	
	20B	1	**240-0286**	1	PLATE	
	20C	1	**278-8186**	1	BAR	

246-2772 **BUCKET AS-ROCK** *(contd.)* **i02735823**

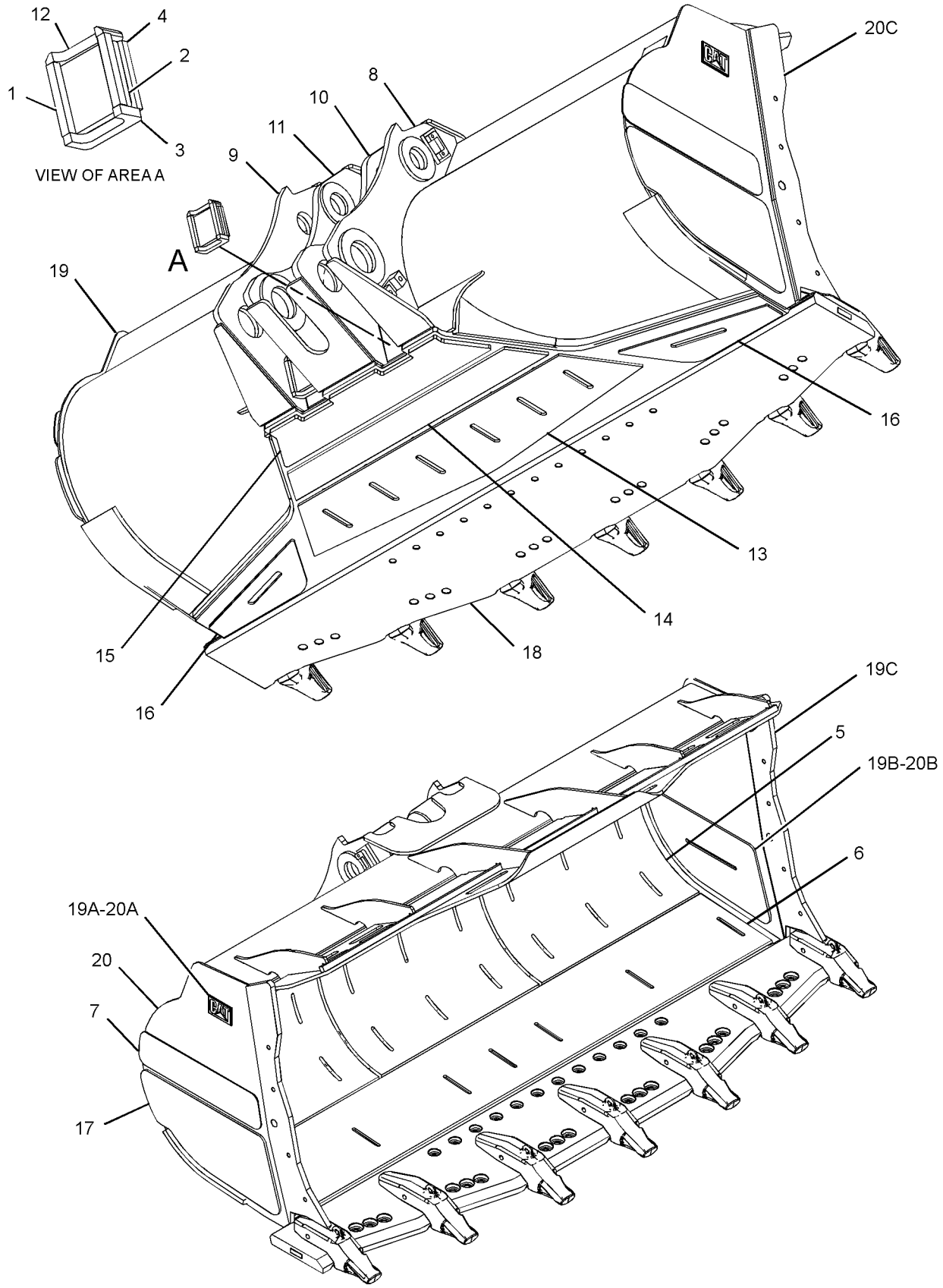

GRAPHIC #1 **<END>** g01313511

WORK TOOLS

265-8231 BUCKET AS-ROCK

S/N: BXY1-UP
7.7-CU M (10.0 CU YD)
AN ATTACHMENT

SMCS-6102 **i02395887**

NOTE	REF NO	GRAPHIC REF	PART NUMBER	QTY	PART NAME 1 2 3 4 5 6 (PRODUCT LEVEL)	SEE PAGE
	1	1	**225-9482**	4	BAR	
	2	1	**225-9584**	2	PLATE	
	3	1	**225-9602**	2	PLATE	
	4	1	**228-4727**	2	PAD-RUBBER	
	5	1	**236-7753**	2	PLATE-WEAR	
	6	1	**246-2764**	1	EDGE AS	
		1	**8P-9770**	1	PLATE	
		1	**232-2114**	8	ADAPTER-TIP (K-110, 2-STRAP, CENTER)	
	7	1	**255-6691**	1	HINGE AS (OUTER, RH)	
	8	1	**255-6692**	1	HINGE AS (OUTER, LH)	
	9	1	**255-6694**	1	HINGE AS (INNER, RH)	
	10	1	**255-6695**	1	HINGE AS (INNER, LH)	
	11	1	**255-6710**	1	PLATE-WEAR	
	12	1	**255-6711**	1	PLATE-WEAR	
	13	1	**255-6712**	1	PLATE-WEAR	
	14	1	**257-3651**	2	PLATE	
	15	1	*265-8235*	1	PLATE AS	
	16	1	*265-8236*	1	PLATE AS	
					(EACH PLATE AS INCLUDES)	
		1	**2C-9259**	1	PLATE-IDENTIFICATION (CAT)	
		1	**265-8232**	1	BAR	
		1	**265-8234**	1	PLATE-WEAR	

265-8231 BUCKET AS-ROCK *(contd.)* **i02395887**

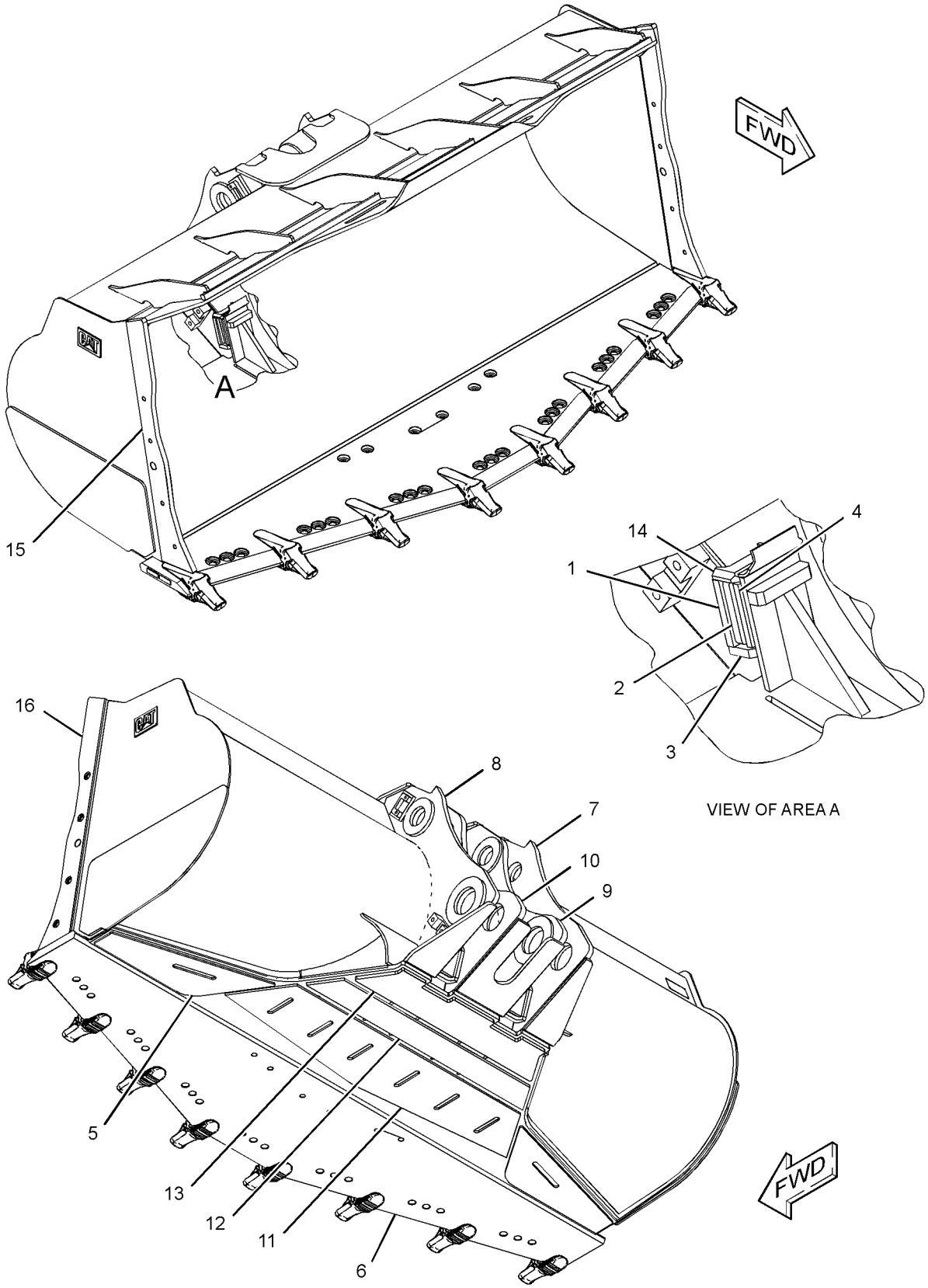

GRAPHIC #1 **<END>** g01232653

WORK TOOLS

283-1851 BUCKET AS-ROCK

S/N: BXY1-UP
6.5-CU M (8.5-CU YD)
PART OF 283-1850 BUCKET GP-ROCK
AN ATTACHMENT

SMCS-6102 **i03444122**

NOTE	REF NO	GRAPHIC REF	PART NUMBER	QTY	PART NAME 1 2 3 4 5 6 (PRODUCT LEVEL)	SEE PAGE
	1	2	**138-0006**	7	RETAINER-G.E.T.	
	2	2	**138-0020**	7	BASE	
	3	2	**138-0022**	7	COVER	
	4	2	**225-9482**	4	BAR	
	5	2	**225-9584**	2	PLATE	
	6	2	**225-9602**	2	PLATE	
	7	2	**228-4727**	2	PAD-RUBBER	
	8	1	**240-7983**	2	PLATE-WEAR	
	9	1	**246-2768**	1	EDGE AS	
	9A	1	**223-8134**	7	ADAPTER-TIP (K-130, 2-STRAP, CENTER)	
	9B	1	**275-5465**	2	BLOCK-WEAR	
	10	2	**255-6691**	1	HINGE AS (OUTER, RH)	
	10A	2	**4E-5591**	1	RETAINER	
	11	1	**255-6692**	1	HINGE AS (OUTER, LH)	
	11A	1	**4E-5591**	1	RETAINER	
	12	2	**255-6694**	1	HINGE AS (INNER, RH)	
	13	2	**255-6695**	1	HINGE AS (INNER, LH)	
	14	2	**255-6710**	1	PLATE-WEAR	
	15	2	**257-3651**	2	PLATE	
	16	2	**257-3655**	2	PLATE-WEAR	
	17	1	*257-3658*	1	PLATE AS (RH)	
	17A	1	**2C-9259**	1	PLATE-IDENTIFICATION (CAT)	
	17B	1	**240-0286**	1	PLATE	
	17C	1	**257-3657**	1	BAR	
	18	1	*257-3659*	1	PLATE AS (LH)	
	18A	1	**2C-9259**	1	PLATE-IDENTIFICATION (CAT)	
	18B	1	**240-0286**	1	PLATE	
	18C	1	**257-3657**	1	BAR	
	19	2	**257-3660**	2	PLATE	
	20	1	**283-1937**	1	PLATE-WEAR	
	21	1	**283-1938**	3	PLATE-WEAR	

283-1851 **BUCKET AS-ROCK** *(contd.)* **i03444122**

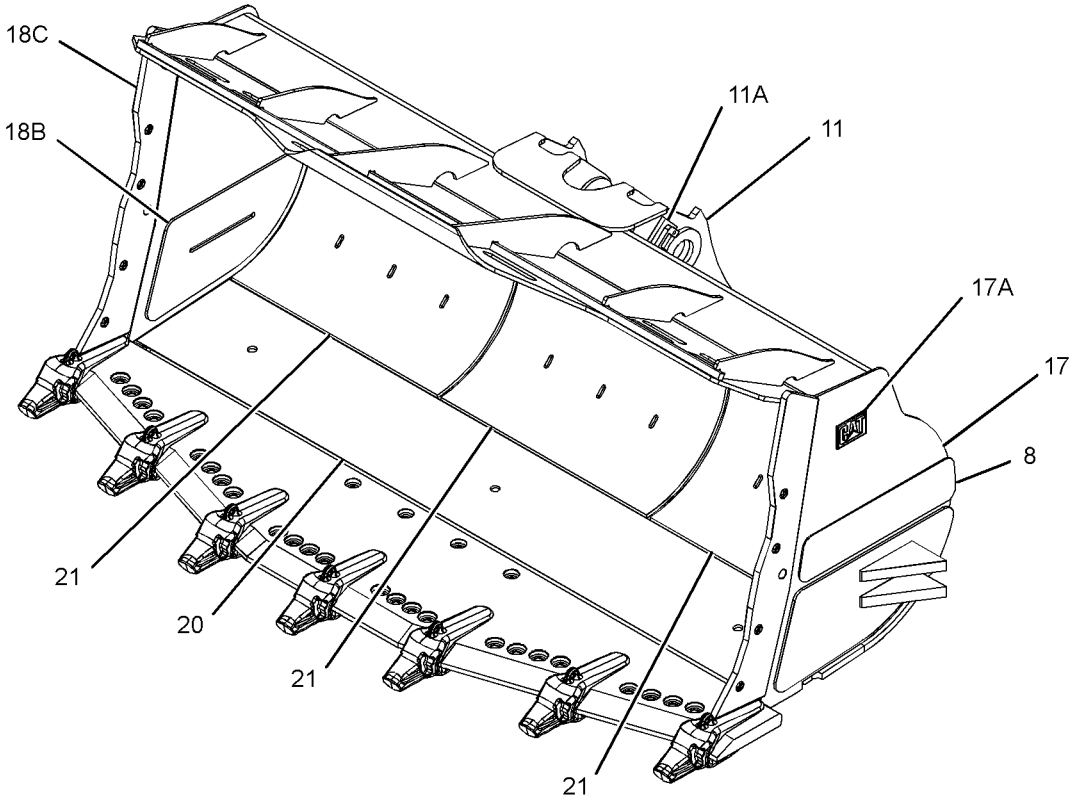

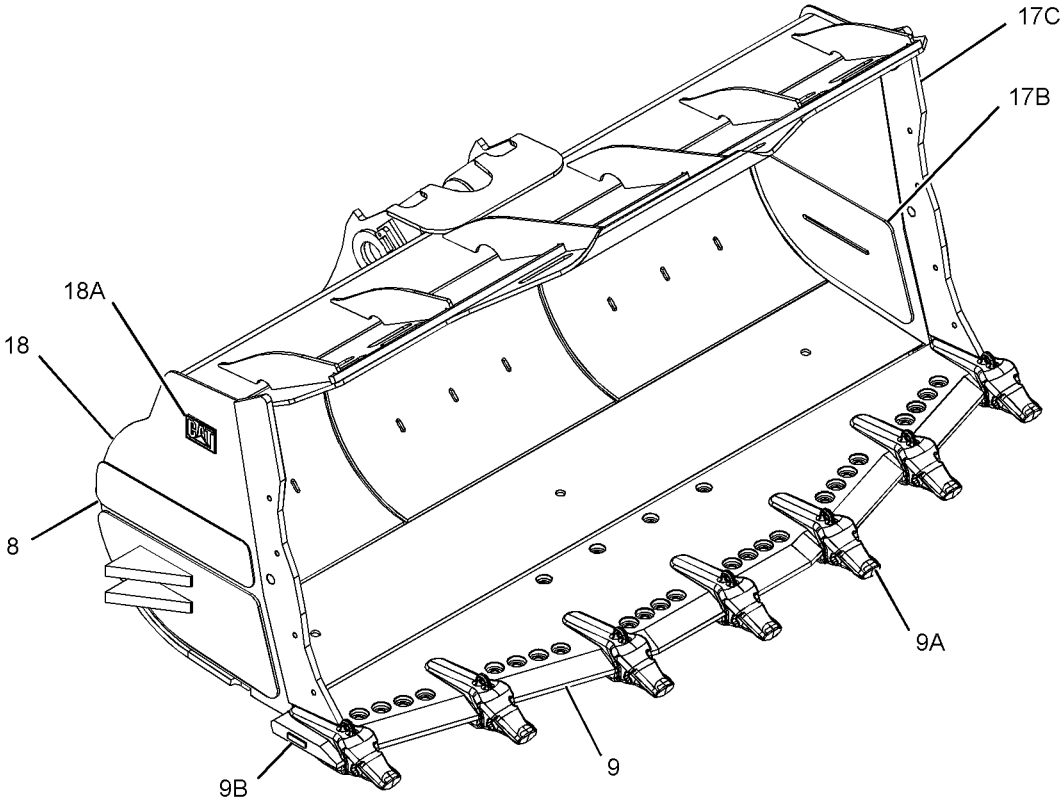

GRAPHIC #1 g01354335

283-1851 **BUCKET AS-ROCK** *(contd.)* **i03444122**

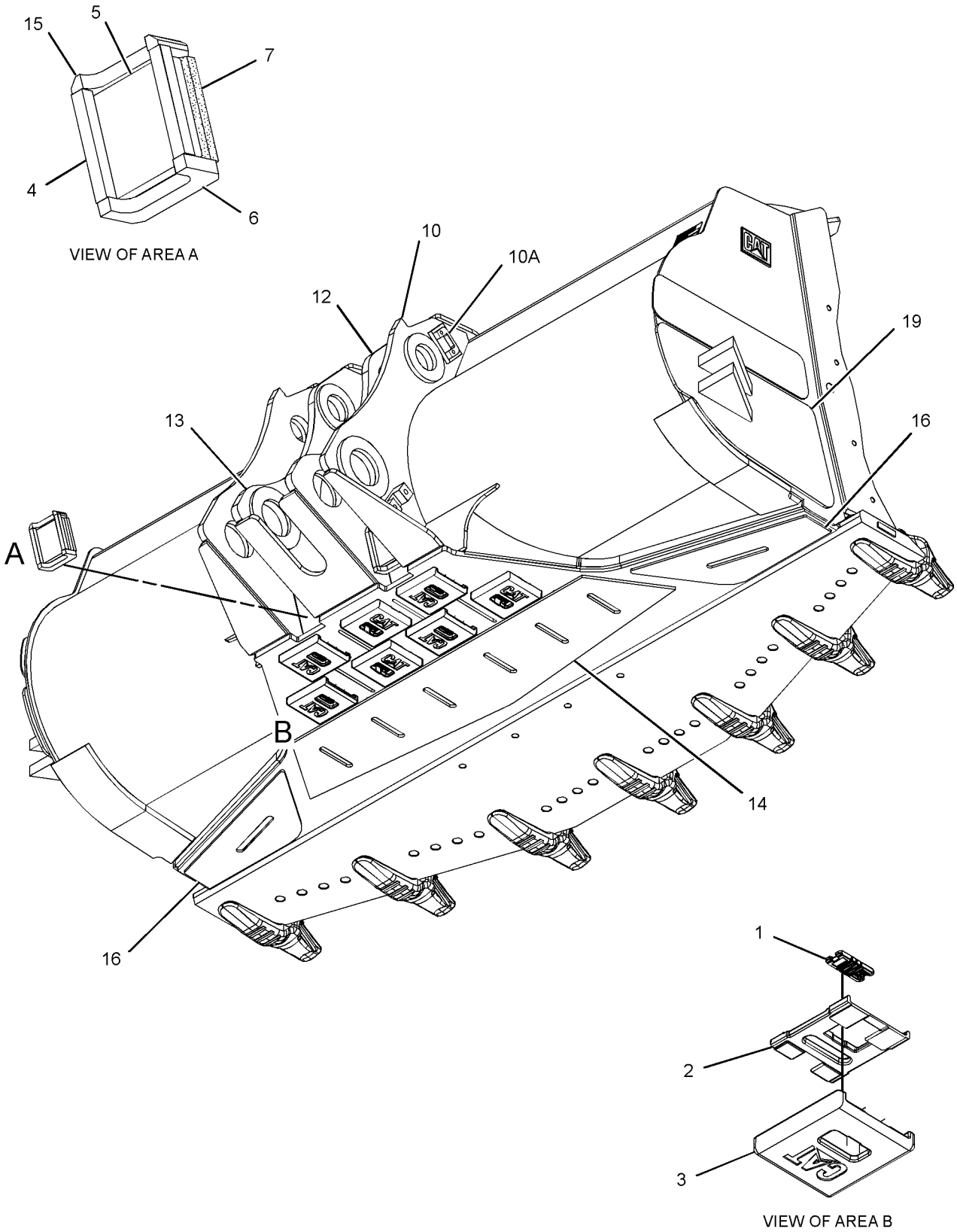

GRAPHIC #2 **<END>** g01354522

WORK TOOLS

283-1941 BUCKET AS-ROCK

S/N: BXY1-UP
6.5-CU M (8.5-CU YD)
PART OF 283-1940 BUCKET GP-ROCK
AN ATTACHMENT

SMCS-6102 **i02676100**

NOTE	REF NO	GRAPHIC REF	PART NUMBER	QTY	PART NAME 1 2 3 4 5 6 (PRODUCT LEVEL)	SEE PAGE
	1	1	**225-9482**	4	BAR	
	2	1	**225-9584**	2	PLATE	
	3	1	**225-9602**	2	PLATE	
	4	1	**228-4727**	2	PAD-RUBBER	
	5	1	**240-7983**	2	PLATE-WEAR	
	6	1	**255-6691**	1	HINGE AS (OUTER, RH)	
	7	1	**255-6692**	1	HINGE AS (OUTER, LH)	
	8	1	**255-6694**	1	HINGE AS (INNER, RH)	
	9	1	**255-6695**	1	HINGE AS (INNER, LH)	
	10	1	**255-6710**	1	PLATE-WEAR	
	11	1	**138-0020**	7	BASE	
	12	1	**138-0022**	7	COVER	
	13	1	**257-3651**	2	PLATE	
	14	1	**257-3655**	2	PLATE-WEAR	
	15	1	**257-3660**	2	PLATE	
	16	1	*257-3697*	1	PLATE AS (RH)	
	16A	1	**2C-9259**	1	PLATE-IDENTIFICATION (CAT)	
	16B	1	**240-0286**	1	PLATE	
	16C	1	**278-8186**	1	BAR	
	17	1	*257-3698*	1	PLATE AS (LH)	
	17A	1	**2C-9259**	1	PLATE-IDENTIFICATION (CAT)	
	17B	1	**240-0286**	1	PLATE	
	17C	1	**278-8186**	1	BAR	
	18	1	**278-8185**	1	EDGE AS	
	18A	1	**232-0138**	5	ADAPTER-TIP (K-130, CENTER)	
	18B	1	**232-0139**	2	ADAPTER-TIP (K-130, CORNER)	
	18C	1	**275-5466**	2	BLOCK-WEAR	
	19	1	**283-1937**	1	PLATE-WEAR	
	20	1	**283-1938**	3	PLATE-WEAR	
	21	1	**138-0006**	7	RETAINER-G.E.T.	

283-1941 **BUCKET AS-ROCK** *(contd.)* **i02676100**

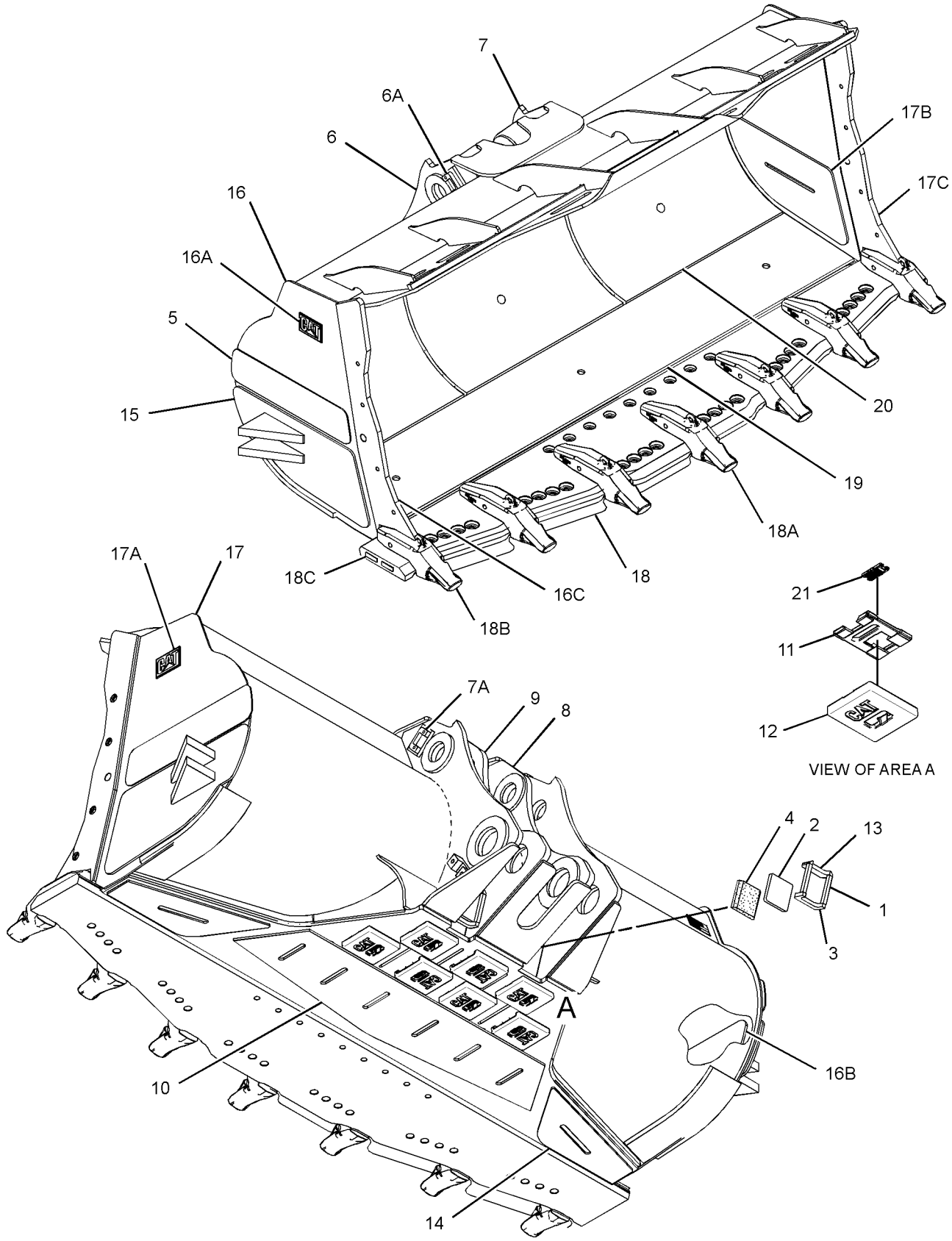

GRAPHIC #1 **<END>** g01349101

WORK TOOLS

288-8251 BUCKET AS-ROCK

S/N: BXY1-UP
6.5-CU M (8.5-CU YD)
PART OF 288-8250 BUCKET GP-ROCK
AN ATTACHMENT

SMCS-6102 **i02613002**

NOTE	REF NO	GRAPHIC REF	PART NUMBER	QTY	PART NAME 1 2 3 4 5 6 (PRODUCT LEVEL)	SEE PAGE
	4	2	**225-9482**	4	BAR	
	5	2	**225-9584**	2	PLATE	
	6	2	**225-9602**	2	PLATE	
	8	2	**228-4727**	2	PAD-RUBBER	
	10	2	**240-7983**	2	PLATE-WEAR	
	12	2	**255-6691**	1	HINGE AS (OUTER, RH)	
	13	2	**255-6692**	1	HINGE AS (OUTER, LH)	
	14	2	**255-6694**	1	HINGE AS (INNER, RH)	
	15	2	**255-6695**	1	HINGE AS (INNER, LH)	
	24	2	**255-6710**	1	PLATE-WEAR	
	25	2	**255-6711**	1	PLATE-WEAR	
	26	2	**255-6712**	1	PLATE-WEAR	
	27	2	**257-3651**	2	PLATE	
	31	2	**257-3655**	2	PLATE-WEAR	
	32	2	**257-3660**	2	PLATE	
	35	1	*257-3697*	1	PLATE AS (RH)	
	35A	1	**2C-9259**	1	PLATE-IDENTIFICATION (CAT)	
	35B	1	**240-0286**	1	PLATE	
	35C	1	**278-8186**	1	BAR	
	36	1	*257-3698*	1	PLATE AS (LH)	
	36A	1	**2C-9259**	1	PLATE-IDENTIFICATION (CAT)	
	36B	1	**240-0286**	1	PLATE	
	36C	1	**278-8186**	1	BAR	
	42	1	**278-8185**	1	EDGE AS	
	42A	1	**232-0138**	5	ADAPTER-TIP (K-130, CENTER)	
	42B	1	**232-0139**	2	ADAPTER-TIP (K-130, CORNER)	
	42C	1	**275-5466**	2	BLOCK-WEAR	
	44	1	**283-1937**	1	PLATE-WEAR	
	45	1	**283-1938**	3	PLATE-WEAR	

288-8251 **BUCKET AS-ROCK** *(contd.)* **i02613002**

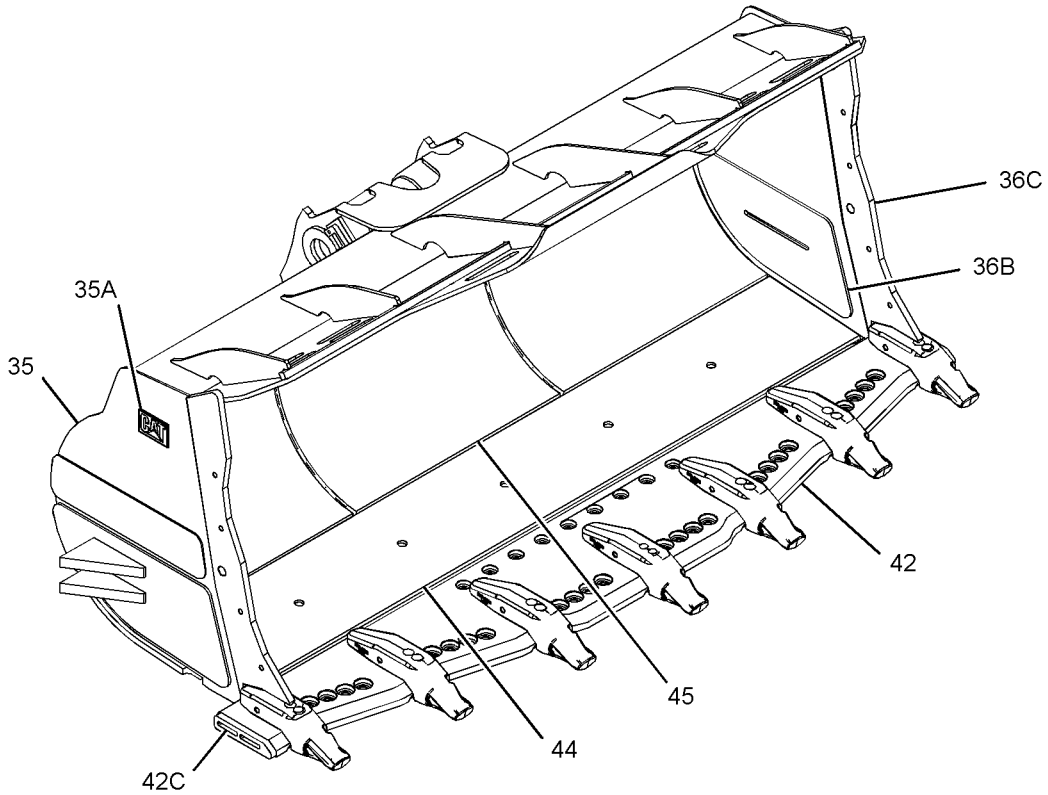

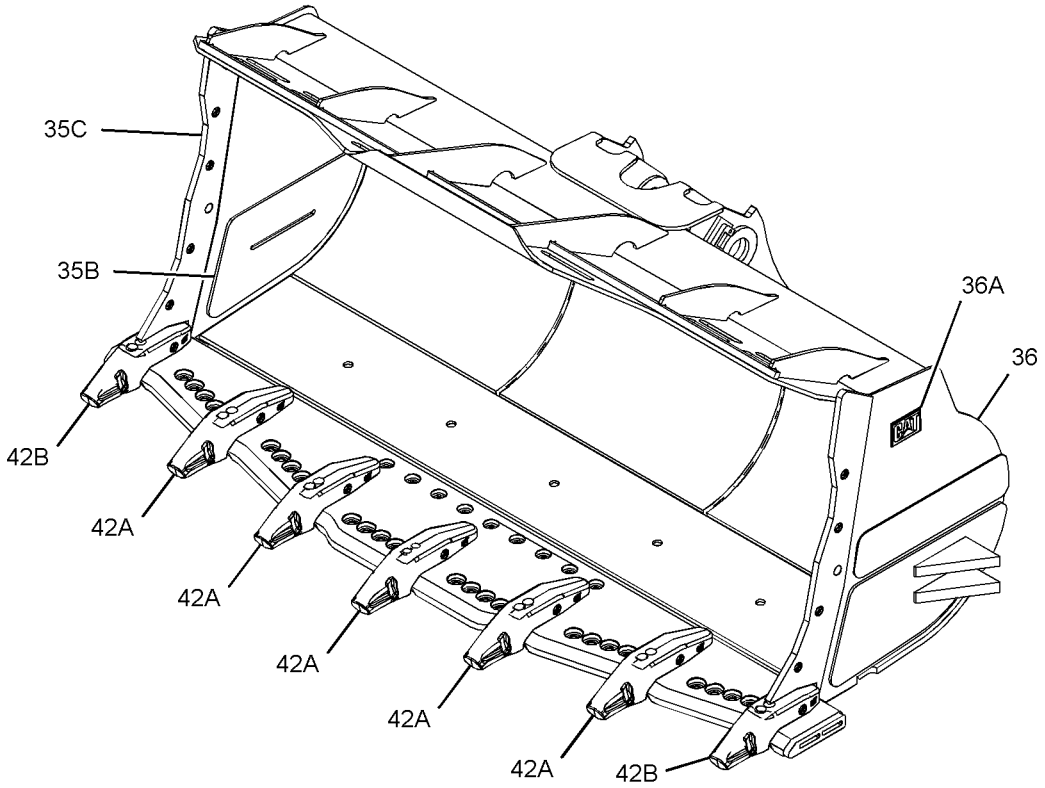

GRAPHIC #1 g01355629

288-8251 **BUCKET AS-ROCK** *(contd.)* **i02613002**

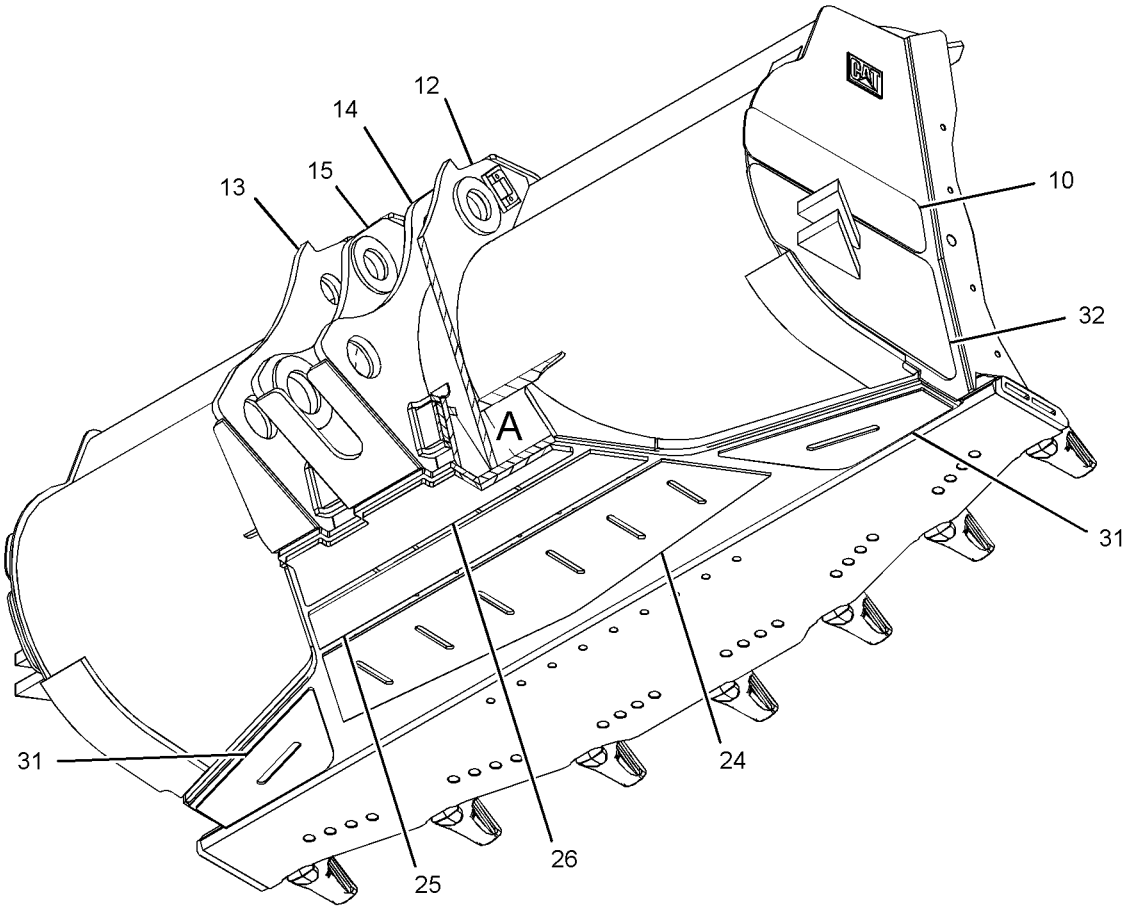

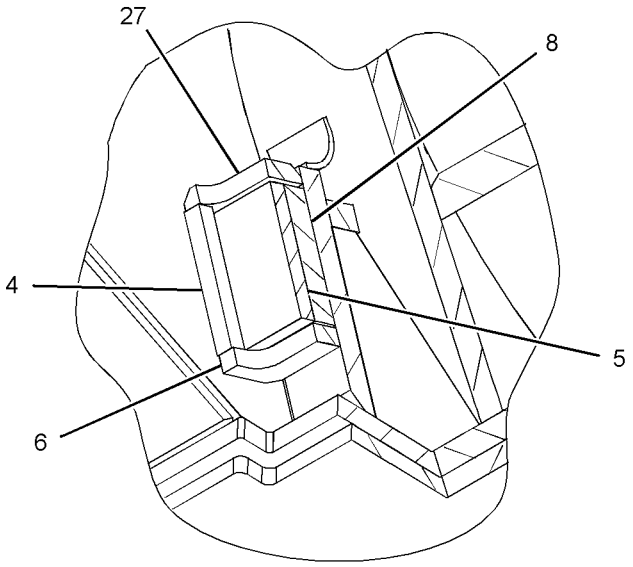

VIEW OF AREA A

GRAPHIC #2 **<END>** g01355905

WORK TOOLS

288-8350 BUCKET AS-ROCK

S/N: BXY1-UP
7.0-CU M (9.0-CU YD)
AN ATTACHMENT

SMCS-6102 **i02681264**

NOTE	REF NO	GRAPHIC REF	PART NUMBER	QTY	PART NAME 1 2 3 4 5 6 (PRODUCT LEVEL)	SEE PAGE
	1	1	**225-9482**	4	BAR	
	2	1	**225-9584**	2	PLATE	
	3	1	**225-9602**	2	PLATE	
	4	1	**228-4727**	2	PAD-RUBBER	
	5	1	**236-7753**	2	PLATE-WEAR	
	6	1	**255-6691**	1	HINGE AS (OUTER, RH)	
	7	1	**255-6692**	1	HINGE AS (OUTER, LH)	
	8	1	**255-6694**	1	HINGE AS (INNER, RH)	
	9	1	**255-6695**	1	HINGE AS (INNER, LH)	
	10	1	**255-6710**	1	PLATE-WEAR	
	11	1	**255-6711**	1	PLATE-WEAR	
	12	1	**255-6712**	1	PLATE-WEAR	
	13	1	**257-3651**	2	PLATE	
	14	1	**292-9482**	1	EDGE AS	
	14A	1	**232-0134**	8	ADAPTER-TIP (K-130, 2-STRAP, CENTER)	
	15	1	*292-9484*	1	PLATE AS (RH)	
	15A	1	**2C-9259**	1	PLATE-IDENTIFICATION (CAT)	
	15B	1	**216-3683**	1	PLATE	
	16	1	*292-9485*	1	PLATE AS (LH)	
	16A	1	**2C-9259**	1	PLATE-IDENTIFICATION (CAT)	
	16B	1	**216-3683**	1	PLATE	

288-8350 **BUCKET AS-ROCK** *(contd.)* **i02681264**

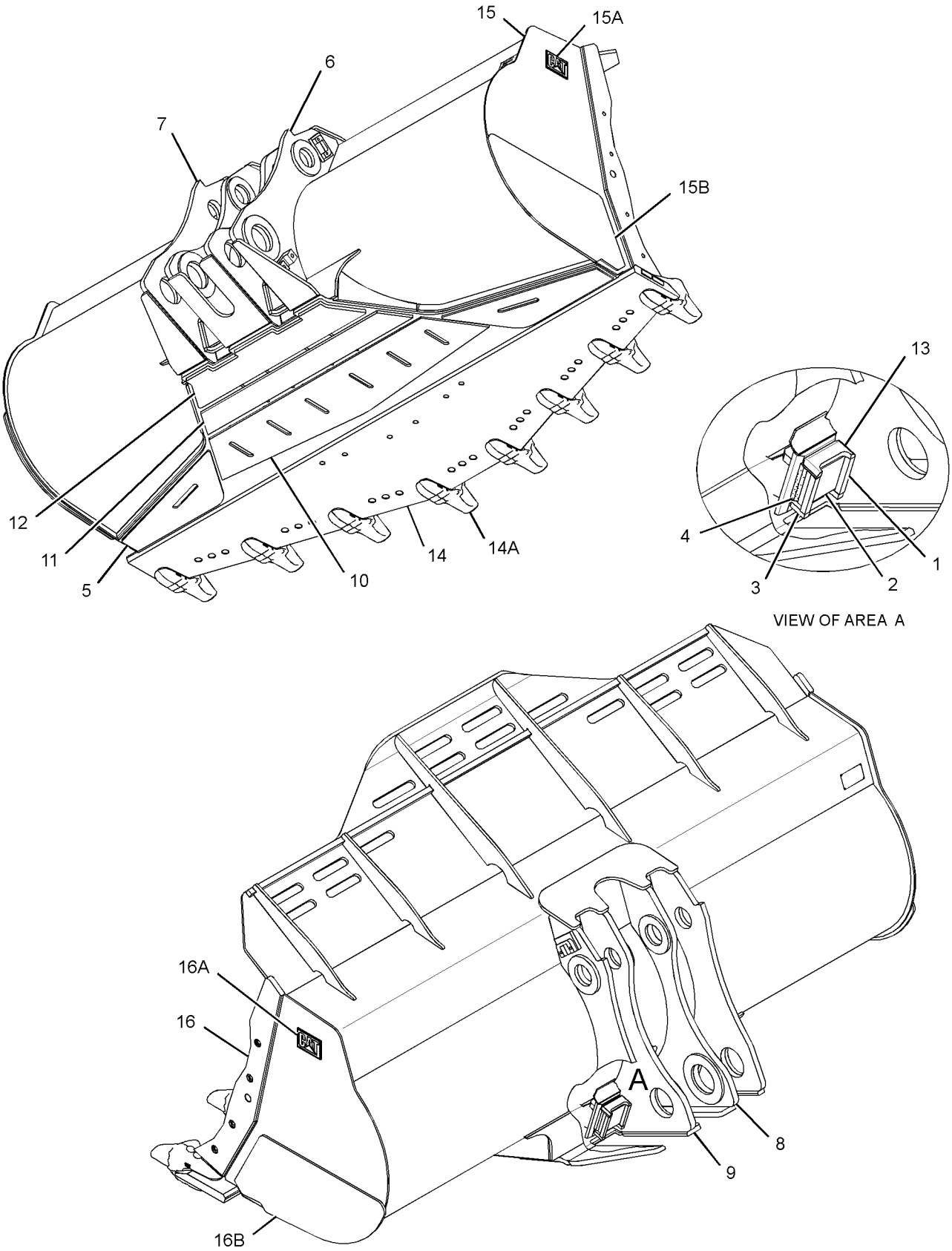

GRAPHIC #1 **<END>** g01367983

WORK TOOLS

310-9061 BUCKET AS-ROCK

S/N: BXY1-UP
PART OF 310-9060 BUCKET GP-ROCK
AN ATTACHMENT

SMCS-6102 **i03127797**

NOTE	REF NO	GRAPHIC REF	PART NUMBER	QTY	PART NAME 1 2 3 4 5 6 (PRODUCT LEVEL)	SEE PAGE
	1	1	**137-4234**	1	PLATE-IDENTIFICATION (WORK TOOL)	
	2	1	**8T-9530**	4	TACK-FASTENER	
	3	1	**225-9584**	2	PLATE	
	4	1	**225-9602**	2	PLATE	
	5	1	**228-4727**	2	PAD-RUBBER	
	6	1	**255-6691**	1	HINGE AS (OUTER, RH)	
	7	1	**255-6692**	1	HINGE AS (OUTER, LH)	
	8	1	**255-6694**	1	HINGE AS (INNER, RH)	
	9	1	**255-6695**	1	HINGE AS (INNER, LH)	
	10	1	**255-6710**	1	PLATE-WEAR	
	11	1	**255-6711**	1	PLATE-WEAR	
	12	1	**255-6712**	1	PLATE-WEAR	
	13	1	**257-3651**	2	PLATE	
	14	1	**280-4060**	1	EDGE-CUTTING (BASE)	
	15	1	**240-9085**	2	PLATE-WEAR	
	16	1	**2C-9259**	2	PLATE-IDENTIFICATION (CAT)	
	17	1	**240-9083**	2	BAR	
	18	1	**225-9482**	4	BAR	

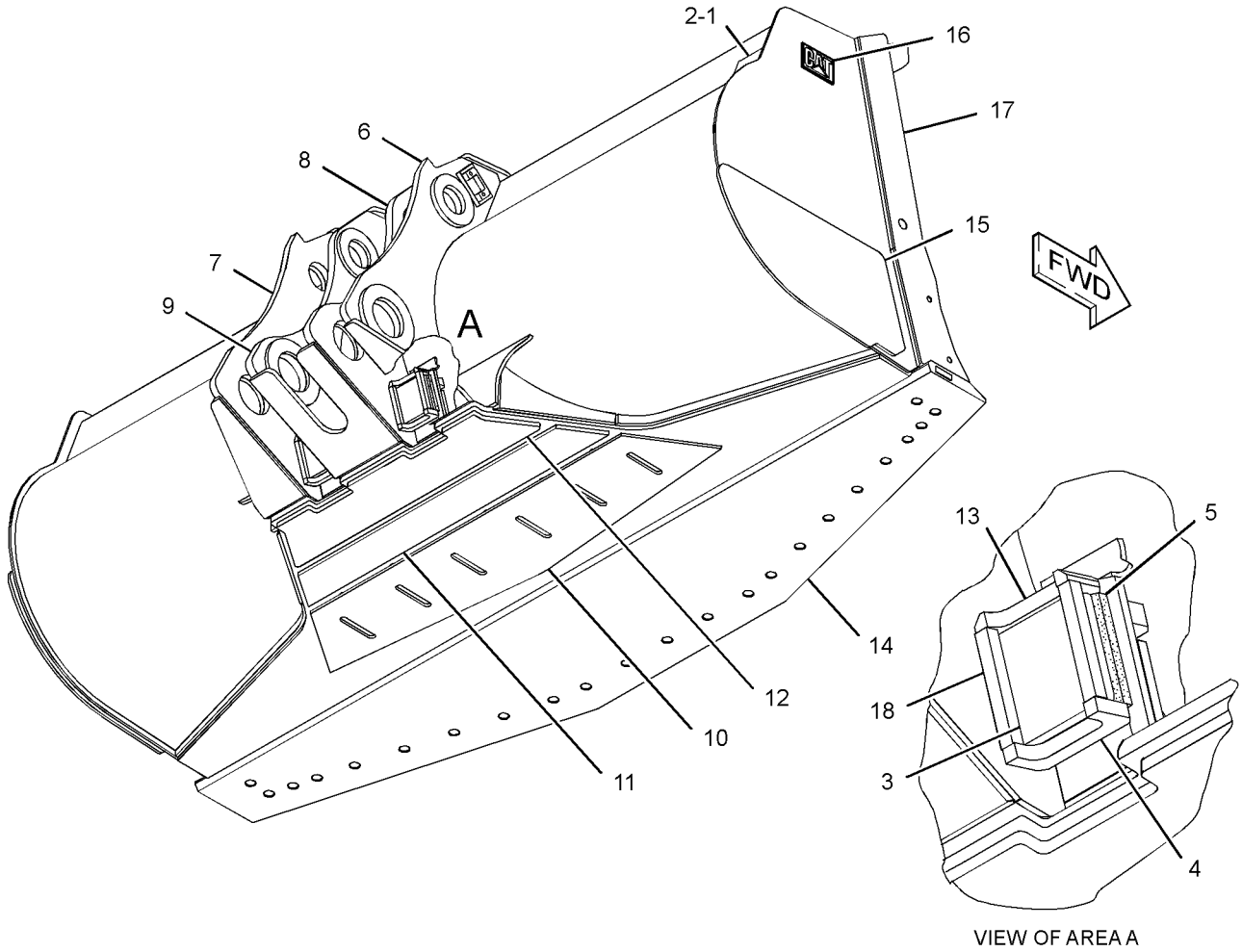

GRAPHIC #1 **<END>** g01620396

WORK TOOLS

310-9200 BUCKET AS-ROCK

S/N: BXY1-UP
FOR USE WITH STANDARD AND HIGH LIFT VERSIONS
AN ATTACHMENT

SMCS-6102 **i03163600**

NOTE	REF NO	GRAPHIC REF	PART NUMBER	QTY	PART NAME 1 2 3 4 5 6 (PRODUCT LEVEL)	SEE PAGE
	1	1	**225-9482**	4	BAR	
	2	1	**225-9584**	2	PLATE	
	3	1	**225-9602**	2	PLATE	
	4	1	**228-4727**	2	PAD-RUBBER	
	5	1	**255-6691**	1	HINGE AS (OUTER, RH)	
		1	**4E-5591**	1	RETAINER	
	6	1	**255-6692**	1	HINGE AS (OUTER, LH)	
		1	**4E-5591**	1	RETAINER	
	7	1	**255-6694**	1	HINGE AS (INNER, RH)	
	8	1	**255-6695**	1	HINGE AS (INNER, LH)	
	9	1	**255-6710**	1	PLATE-WEAR	
	10	1	**255-6711**	1	PLATE-WEAR	
	11	1	**255-6712**	1	PLATE-WEAR	
	12	1	**257-3651**	2	PLATE	
	13	1	**257-3655**	2	PLATE-WEAR	
	14	1	**314-6409**	1	EDGE AS	
	14A	1	**8P-9770**	1	PLATE	
	14B	1	**232-0134**	8	ADAPTER-TIP (K-130, 2-STRAP, CENTER)	
	15	1	*314-6413*	1	PLATE AS (RH)	
	15A	1	**2C-9259**	1	PLATE-IDENTIFICATION (CAT)	
	15B	1	**239-0245**	1	PLATE	
	16	1	*314-6414*	1	PLATE AS (LH)	
	16A	1	**2C-9259**	1	PLATE-IDENTIFICATION (CAT)	
	16B	1	**239-0245**	1	PLATE	

310-9200 BUCKET AS-ROCK *(contd.)* **i03163600**

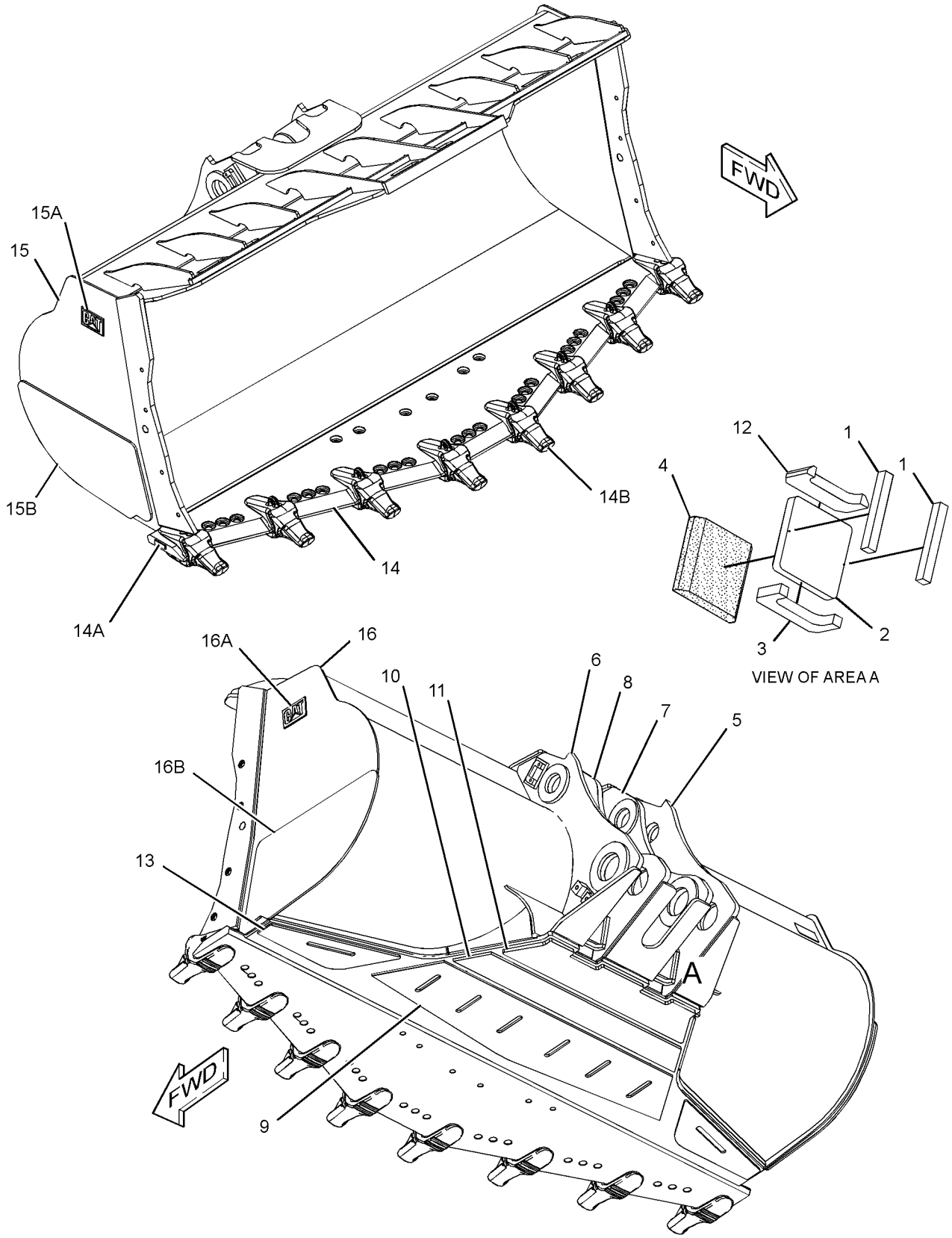

GRAPHIC #1 **<END>** g01935013

WORK TOOLS

210-1235 BUCKET GP-COAL

S/N: BXY1-UP
6.5 CU M (8.5 CU YD)
AN ATTACHMENT

SMCS-6132 **i02540905**

NOTE	REF NO	GRAPHIC REF	PART NUMBER	QTY	PART NAME 1 2 3 4 5 6 (PRODUCT LEVEL)	SEE PAGE
	1	1	**184-9866**	2	STOP	
Y	2	1	*210-1236*	1	BUCKET AS-COAL	1944
M	3	1	**8T-4139**	8	BOLT (M12X1.75X30-MM)	

M-METRIC PART
Y-SEPARATE ILLUSTRATION

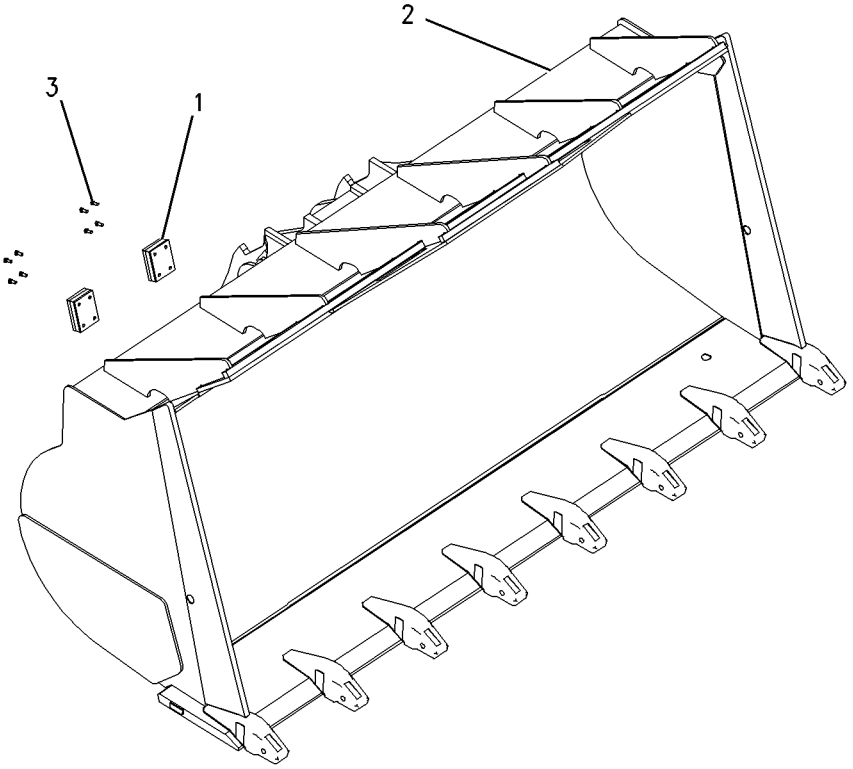

GRAPHIC #1 **<END>** g00847202

WORK TOOLS

265-8218 BUCKET GP-GENERAL PURPOSE

S/N: BXY1-UP
7.7 CU M(10 CU YD)
AN ATTACHMENT

SMCS-6101 **i02456187**

NOTE	REF NO	GRAPHIC REF	PART NUMBER	QTY	PART NAME 1 2 3 4 5 6 (PRODUCT LEVEL)	SEE PAGE
	1	1	**1U-0761**	2	EDGE-END	
	2	1	**208-5261**	2	EDGE-CUTTING	
Y	3	1	*265-8219*	1	BUCKET AS-GENERAL PURPOSE	1948
	4	1	**3K-9770**	12	NUT-FULL (1-1/4-7-THD)	
	5	1	**6V-8360**	12	BOLT-PLOW (1-1/4-7X4.53-IN)	

Y-SEPARATE ILLUSTRATION

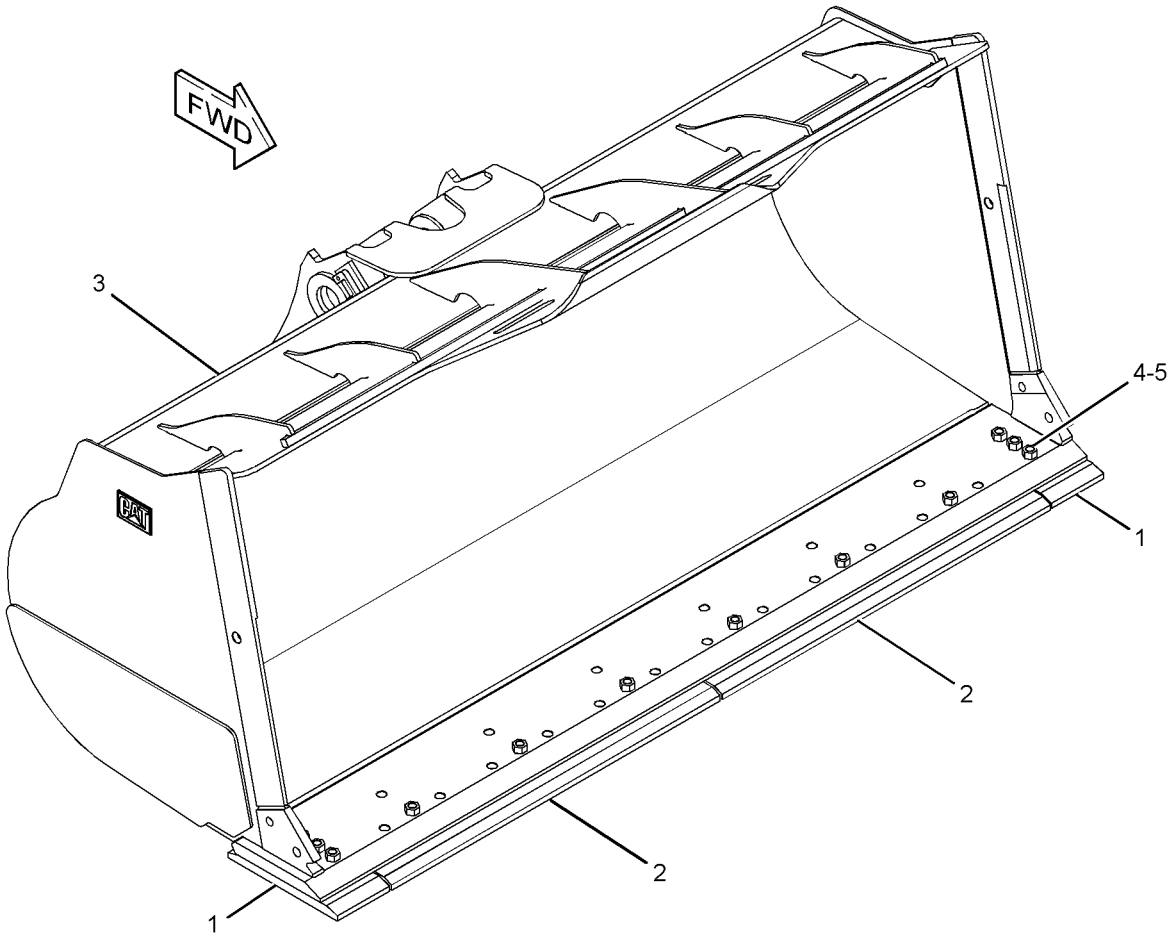

GRAPHIC #1 **<END>** g01228975

WORK TOOLS

246-2754 BUCKET GP-ROCK

S/N: BXY1-UP
6.9-CU M (9.0-CU YD)
AN ATTACHMENT

SMCS-6102 **i02224362**

NOTE	REF NO	GRAPHIC REF	PART NUMBER	QTY	PART NAME 1 2 3 4 5 6 (PRODUCT LEVEL)	SEE PAGE
Y	1	1	**9W-5731**	1	EDGE-CUTTING (LH)	2009
	2	1	**9W-5732**	1	EDGE-CUTTING (LH)	
	3	1	**9W-5733**	1	EDGE-CUTTING (CENTER)	
	4	1	**9W-5734**	1	EDGE-SEGMENT (CENTER)	
Y	5	1	**9W-5735**	1	EDGE-CUTTING (RH)	2009
	6	1	**9W-5736**	1	EDGE-CUTTING (RH)	
Y	7	1	*246-2755*	1	BUCKET AS-ROCK	1952
	8	1	**3K-9770**	28	NUT-FULL (1-1/4-7-THD)	
	9	1	**6V-6535**	28	BOLT-PLOW (1-1/4X3.75-IN)	

Y-SEPARATE ILLUSTRATION

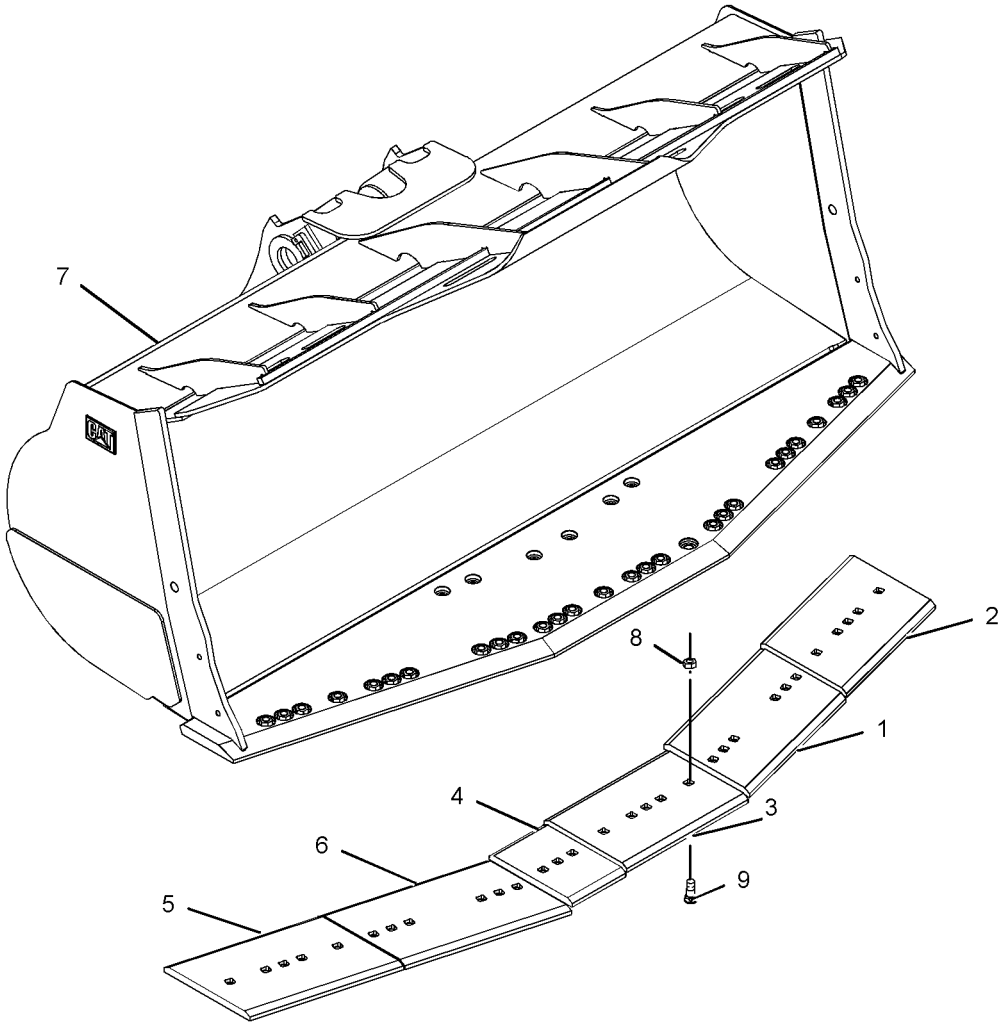

GRAPHIC #1 **<END>** g01123698

WORK TOOLS

246-2769 BUCKET GP-ROCK

S/N: BXY1-UP
6.4-CU M (8.33-CU YD)
AN ATTACHMENT

SMCS-6102 **i02708536**

NOTE	REF NO	GRAPHIC REF	PART NUMBER	QTY	PART NAME 1 2 3 4 5 6 (PRODUCT LEVEL)	SEE PAGE
	1	1	**4T-6617**	1	EDGE-CUTTING	
Y	2	1	*106-0912*	2	PROTECTOR GP-SIDE BAR	2042
Y	3	1	*246-2770*	1	BUCKET AS-ROCK	1962
	4	1	**275-5470**	2	EDGE-SEGMENT	
	5	1	**275-5471**	2	EDGE-SEGMENT (RH)	
	6	1	**275-5472**	2	EDGE-SEGMENT (LH)	
	7	1	**2J-3507**	4	NUT-FULL (1-8-THD)	
	8	1	**3K-9770**	24	NUT-FULL (1-1/4-7-THD)	
	9	1	**5P-8136**	4	BOLT-PLOW (1-8X4-IN)	
	10	1	**5P-8250**	4	WASHER (28X49X5-MM THK)	
	11	1	**5P-8823**	24	BOLT-PLOW (1-1/4-7X4.13-IN)	

Y-SEPARATE ILLUSTRATION

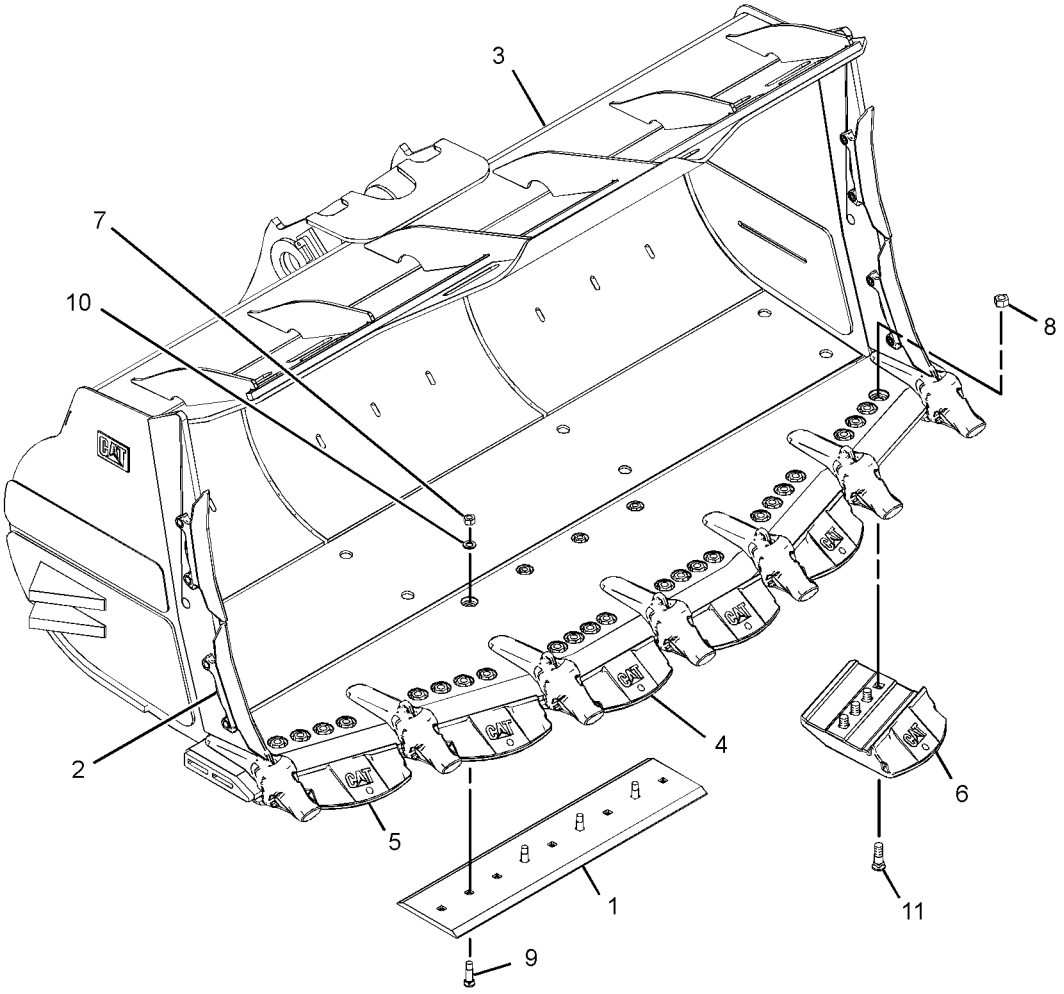

GRAPHIC #1 **<END>** g01361085

WORK TOOLS

246-2771 BUCKET GP-ROCK

S/N: BXY1-UP
6.4-CU M (8.33-CU YD)
AN ATTACHMENT

SMCS-6102 **i02564932**

NOTE	REF NO	GRAPHIC REF	PART NUMBER	QTY	PART NAME 1 2 3 4 5 6 (PRODUCT LEVEL)	SEE PAGE
	1	1	**5P-8362**	24	NUT (1-1/4-7-THD)	
Y	2	1	*106-0912*	2	PROTECTOR GP-SIDE BAR	2042
	3	1	**114-0359**	7	RETAINER AS	
Y	4	1	*246-2772*	1	BUCKET AS-ROCK	1965
	5	1	**251-2180**	5	COVER-ADAPTER (CENTER)	
	6	1	**251-2461**	2	COVER-ADAPTER (CORNER)	
	7	1	**251-6730**	7	PIN	
	8	1	**257-1778**	2	PLATE-WEAR (CENTER)	
	9	1	**257-1779**	2	PLATE-WEAR (RH)	
	10	1	**257-1781**	2	PLATE-WEAR (LH)	
	11	1	**257-1782**	2	EDGE-SEGMENT (CENTER)	
	12	1	**257-1783**	2	EDGE-SEGMENT (RH)	
	13	1	**257-1784**	2	EDGE-SEGMENT (LH)	
	14	1	**198-1092**	24	BOLT-PLOW (1-1/4-7X4.5-IN)	
	15	1	**2J-3507**	9	NUT-FULL (1-8-THD)	
	16	1	**3K-9770**	24	NUT-FULL (1-1/4-7-THD)	
	17	1	**4T-6617**	1	EDGE-CUTTING	
	18	1	**5P-8136**	9	BOLT-PLOW (1-8X4-IN)	
	19	1	**5P-8250**	9	WASHER (28X49X5-MM THK)	

Y-SEPARATE ILLUSTRATION

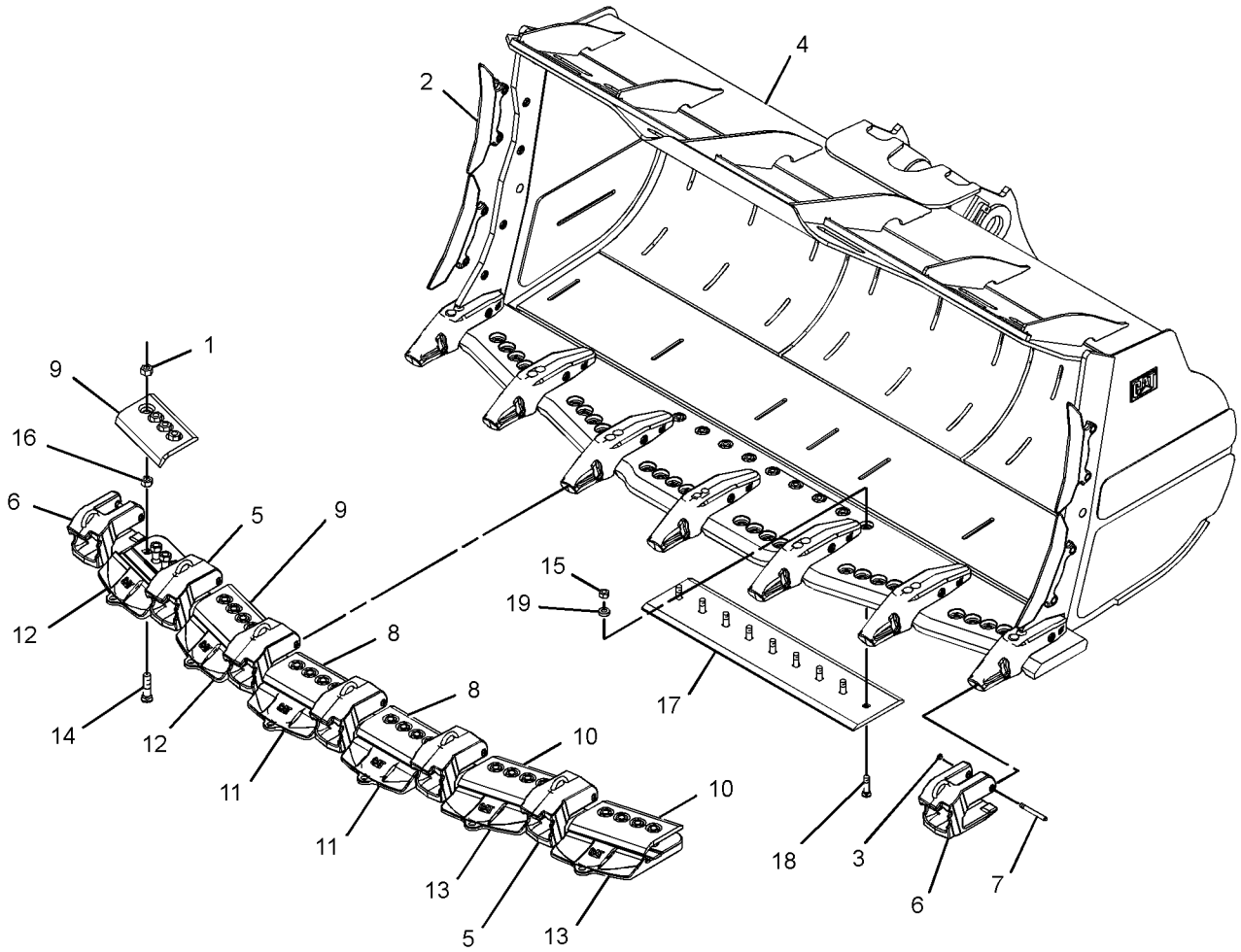

GRAPHIC #1 **<END>** g01334218

WORK TOOLS

283-1850 BUCKET GP-ROCK

S/N: BXY1-UP
6.5-CU M (8.5-CU YD)
FOR USE WITH 255-0040—PAGE 1679, 255-0042—PAGE 1680
AN ATTACHMENT

SMCS-6102 **i02675673**

NOTE	REF NO	GRAPHIC REF	PART NUMBER	QTY	PART NAME 1 2 3 4 5 6 (PRODUCT LEVEL)	SEE PAGE
	1	1	**4T-6617**	1	EDGE-CUTTING	
Y	2	1	*106-0912*	2	PROTECTOR GP-SIDE BAR	2042
	3	1	**275-5470**	2	EDGE-SEGMENT	
	4	1	**275-5471**	2	EDGE-SEGMENT (RH)	
	5	1	**275-5472**	2	EDGE-SEGMENT (LH)	
Y	6	1	*283-1851*	1	BUCKET AS-ROCK	1969
	7	1	**2J-3507**	4	NUT-FULL (1-8-THD)	
	8	1	**3K-9770**	24	NUT-FULL (1-1/4-7-THD)	
	9	1	**5P-8136**	4	BOLT-PLOW (1-8X4-IN)	
	10	1	**5P-8250**	4	WASHER (28X49X5-MM THK)	
	11	1	**5P-8823**	24	BOLT-PLOW (1-1/4-7X4.13-IN)	

Y-SEPARATE ILLUSTRATION

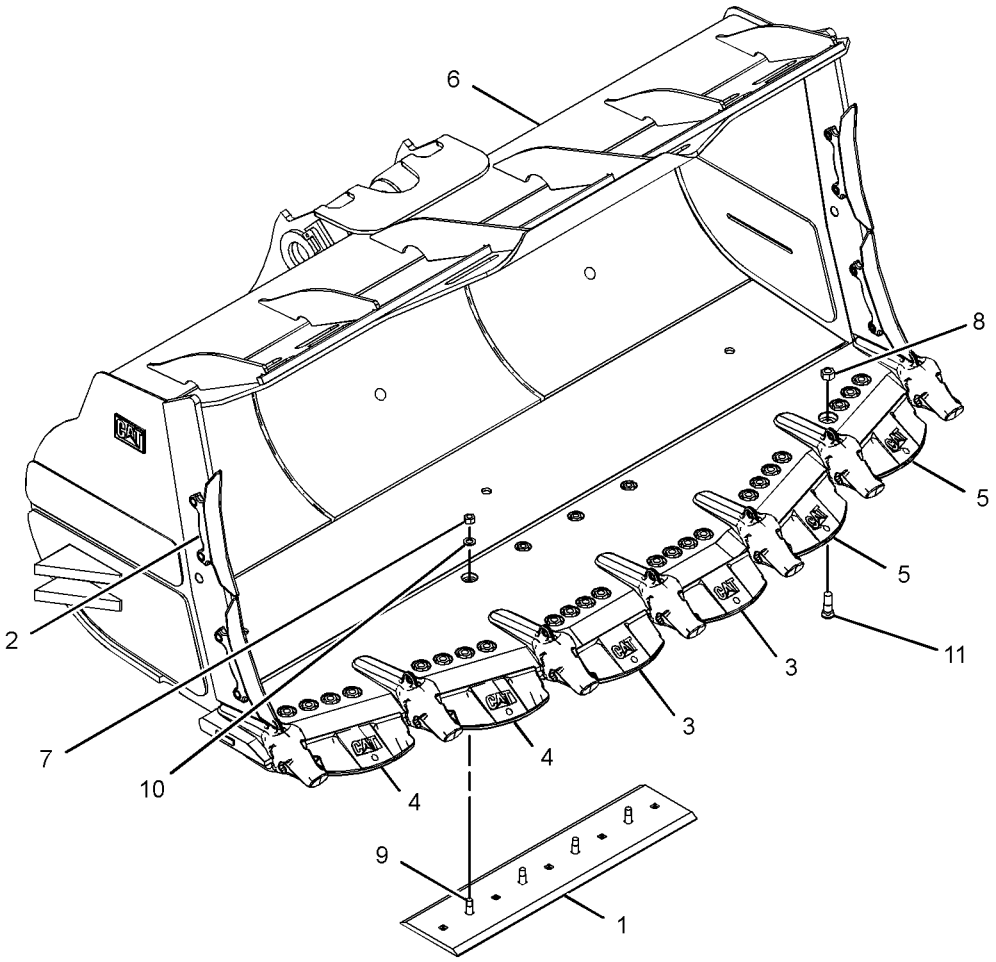

GRAPHIC #1 **<END>** g01354086

WORK TOOLS

283-1940 BUCKET GP-ROCK

S/N: BXY1-UP
6.5-CU M (8.5-CU YD)
FOR USE WITH 255-0040—PAGE 1679, 255-0042—PAGE 1680
AN ATTACHMENT

SMCS-6102 **i02675677**

NOTE	REF NO	GRAPHIC REF	PART NUMBER	QTY	PART NAME 1 2 3 4 5 6 (PRODUCT LEVEL)	SEE PAGE
	1	1	**5P-8362**	24	NUT (1-1/4-7-THD)	
Y	2	1	*106-0912*	2	PROTECTOR GP-SIDE BAR	2042
	3	1	**114-0359**	7	RETAINER AS	
	4	1	**251-2180**	5	COVER-ADAPTER (CENTER)	
	5	1	**251-2461**	2	COVER-ADAPTER (CORNER)	
	6	1	**251-6730**	7	PIN	
	7	1	**257-1778**	2	PLATE-WEAR (CENTER)	
	8	1	**257-1779**	2	PLATE-WEAR (RH)	
	9	1	**257-1781**	2	PLATE-WEAR (LH)	
	10	1	**257-1782**	2	EDGE-SEGMENT (CENTER)	
	11	1	**257-1783**	2	EDGE-SEGMENT (RH)	
	12	1	**257-1784**	2	EDGE-SEGMENT (LH)	
Y	13	1	*283-1941*	1	BUCKET AS-ROCK	1972
	14	1	**198-1092**	24	BOLT-PLOW (1-1/4-7X4.5-IN)	
	15	1	**2J-3507**	9	NUT-FULL (1-8-THD)	
	16	1	**3K-9770**	24	NUT-FULL (1-1/4-7-THD)	
	17	1	**4T-6617**	1	EDGE-CUTTING	
	18	1	**5P-8136**	9	BOLT-PLOW (1-8X4-IN)	
	19	1	**5P-8250**	9	WASHER (28X49X5-MM THK)	

Y-SEPARATE ILLUSTRATION

283-1940 BUCKET GP-ROCK *(contd.)* **i02675677**

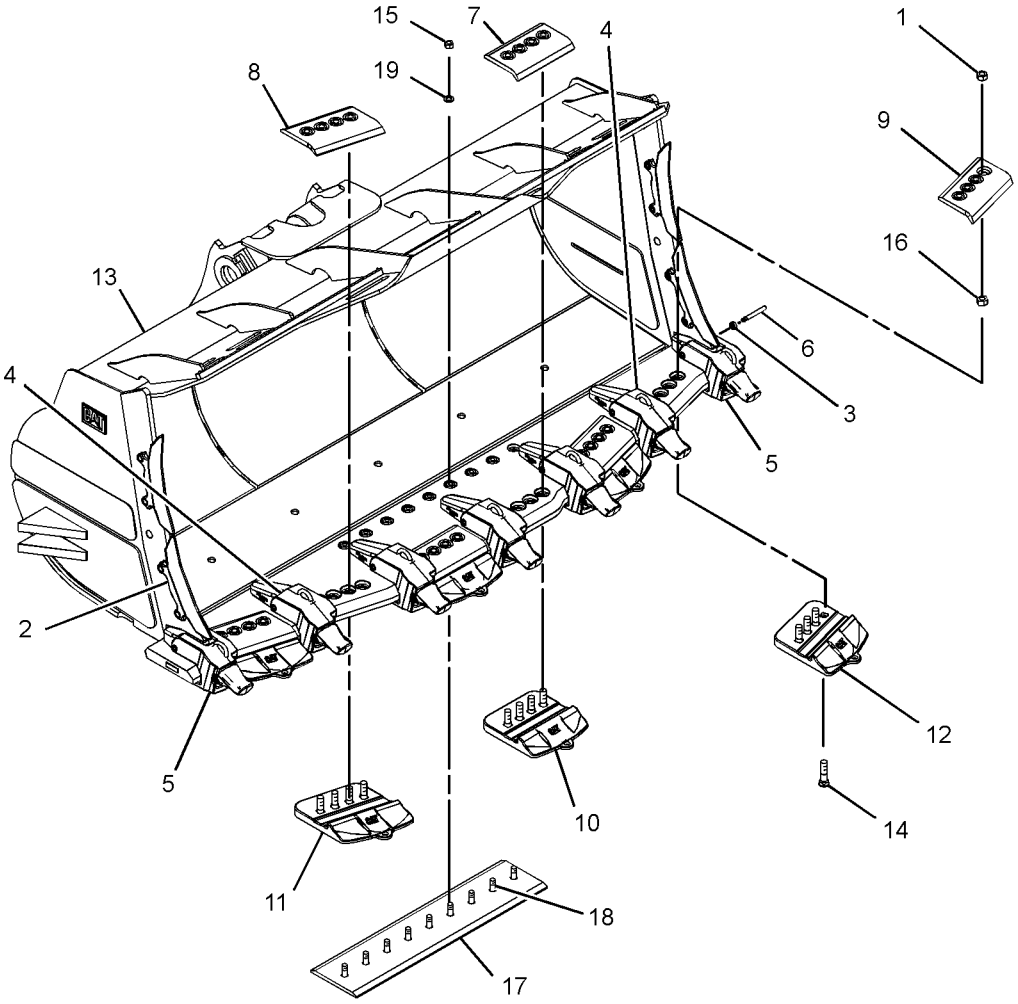

GRAPHIC #1 **<END>** g01354054

WORK TOOLS

288-8250 BUCKET GP-ROCK

S/N: BXY1-UP
6.5-CU M (8.5-CU YDS)
AN ATTACHMENT

SMCS-6102 **i02625426**

NOTE	REF NO	GRAPHIC REF	PART NUMBER	QTY	PART NAME 1 2 3 4 5 6 (PRODUCT LEVEL)	SEE PAGE
	1	1	**5P-8362**	24	NUT (1-1/4-7-THD)	
Y	2	1	*106-0912*	2	PROTECTOR GP-SIDE BAR	2042
	3	1	**114-0359**	7	RETAINER AS	
	4	1	**251-2180**	5	COVER-ADAPTER (CENTER)	
	5	1	**251-2461**	2	COVER-ADAPTER (CORNER)	
	6	1	**251-6730**	7	PIN	
	7	1	**257-1778**	2	PLATE-WEAR (CENTER)	
	8	1	**257-1779**	2	PLATE-WEAR (RH)	
	9	1	**257-1781**	2	PLATE-WEAR (LH)	
	10	1	**257-1782**	2	EDGE-SEGMENT (CENTER)	
	11	1	**257-1783**	2	EDGE-SEGMENT (RH)	
	12	1	**257-1784**	2	EDGE-SEGMENT (LH)	
Y	13	1	*288-8251*	1	BUCKET AS-ROCK	1974
	14	1	**198-1092**	24	BOLT-PLOW (1-1/4-7X4.5-IN)	
	15	1	**2J-3507**	9	NUT-FULL (1-8-THD)	
	16	1	**3K-9770**	24	NUT-FULL (1-1/4-7-THD)	
	17	1	**4T-6617**	1	EDGE-CUTTING	
	18	1	**5P-8136**	9	BOLT-PLOW (1-8X4-IN)	
	19	1	**5P-8250**	9	WASHER (28X49X5-MM THK)	

Y-SEPARATE ILLUSTRATION

288-8250 BUCKET GP-ROCK *(contd.)* **i02625426**

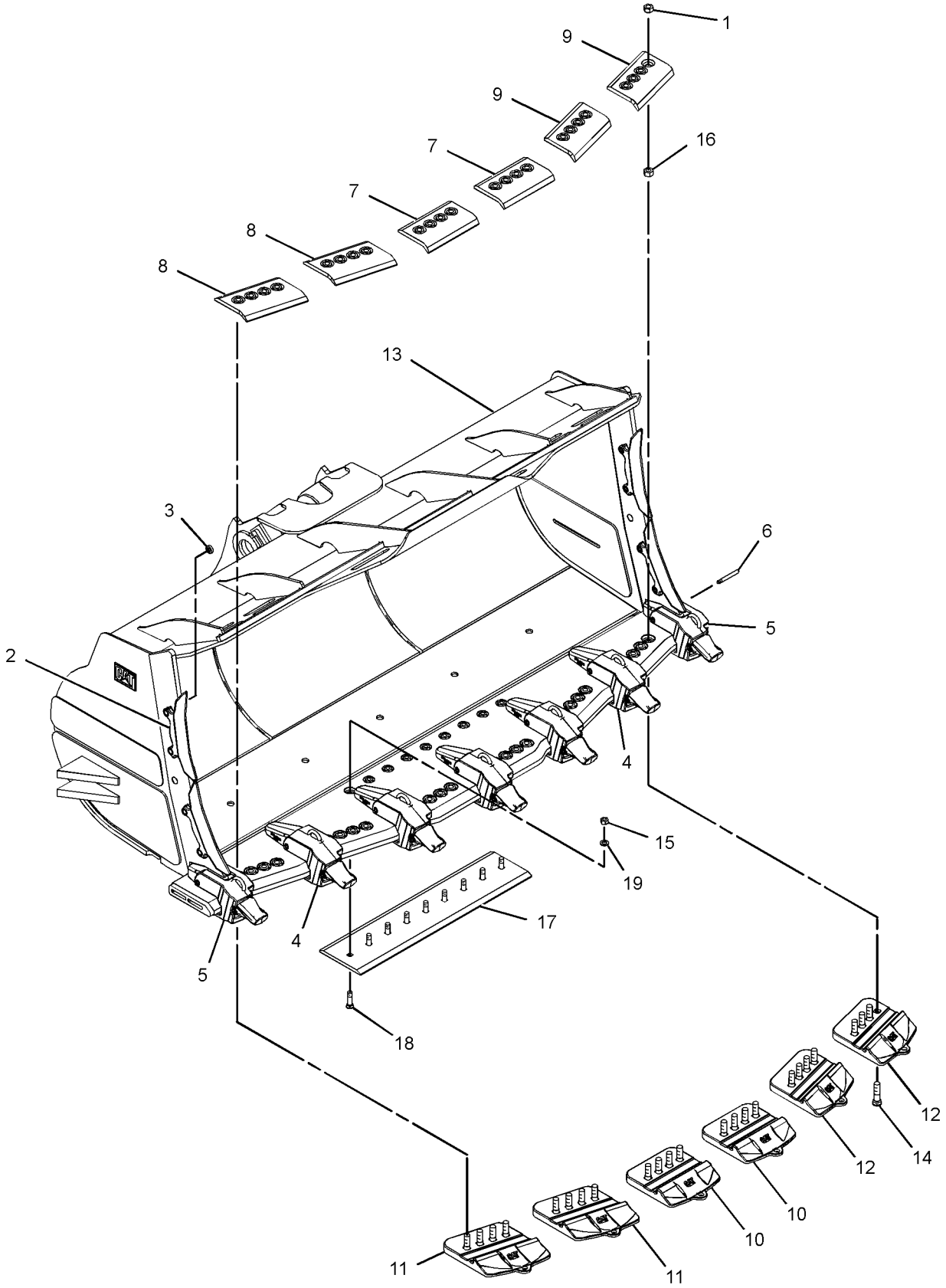

GRAPHIC #1 **<END>** g01345498

WORK TOOLS

310-9060 BUCKET GP-ROCK

S/N: BXY1-UP
6.9-CU M (9.0-CU YD)
FOR USE WITH 255-0040—PAGE 1679, 255-0041—PAGE 1680, 255-0042—PAGE 1680, 255-0043—PAGE 1681
AN ATTACHMENT

SMCS-6102 **i03127703**

NOTE	REF NO	GRAPHIC REF	PART NUMBER	QTY	PART NAME 1 2 3 4 5 6 (PRODUCT LEVEL)	SEE PAGE
Y	1	1	**280-4062**	1	EDGE-CUTTING (CENTER, RH)	2019
Y	2	1	**280-4063**	1	EDGE-CUTTING (CENTER)	2020
Y	3	1	**280-4064**	1	EDGE-CUTTING (LH)	2021
Y	4	1	**280-4066**	1	EDGE-CUTTING (RH)	2023
Y	5	1	**280-4067**	1	EDGE-CUTTING (LH)	2024
Y	6	1	*310-9061*	1	BUCKET AS-ROCK	1979
	7	1	**3K-9770**	23	NUT-FULL (1-1/4-7-THD)	
	8	1	**6V-6535**	23	BOLT-PLOW (1-1/4-7X3.74-IN)	

Y-SEPARATE ILLUSTRATION

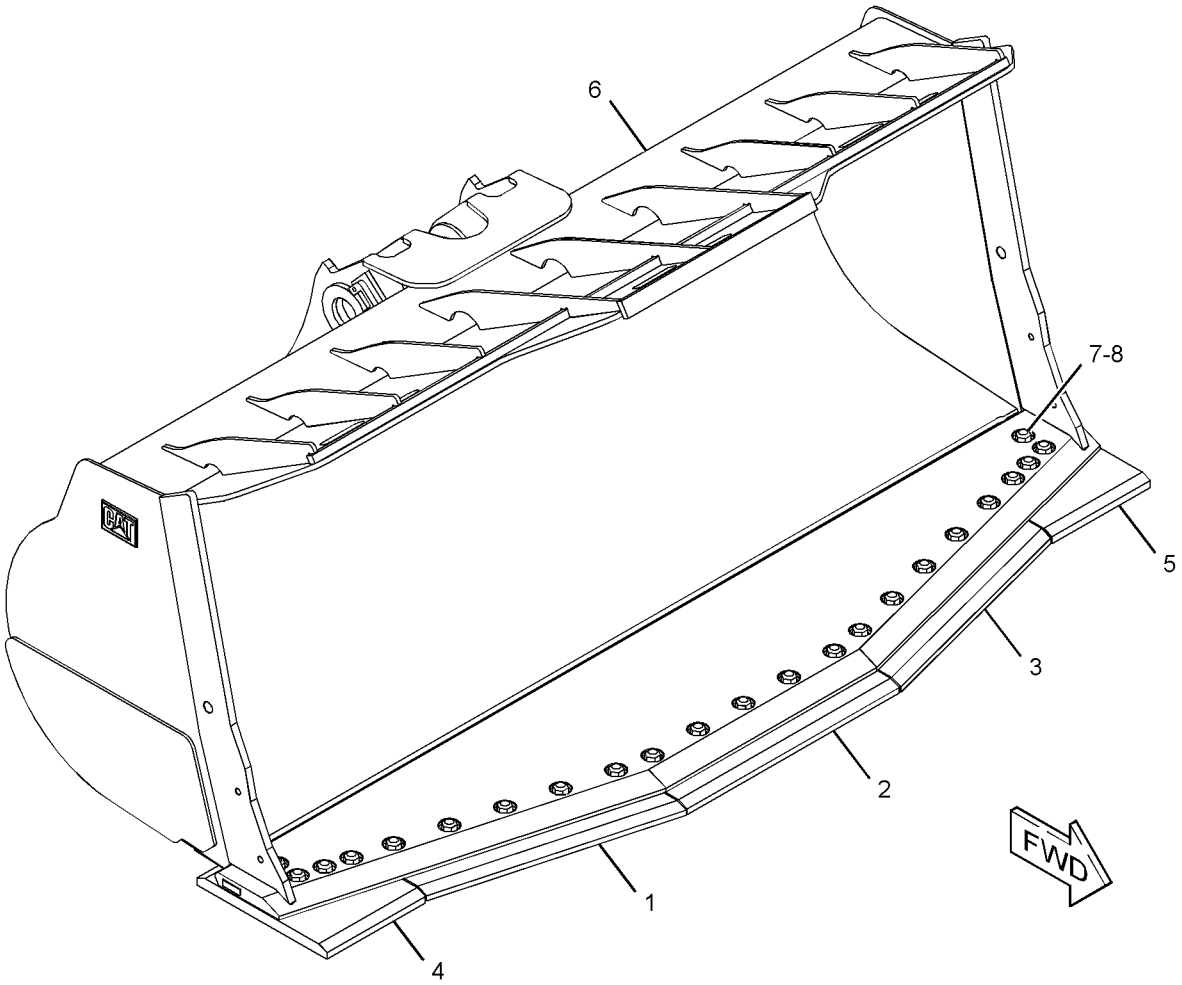

GRAPHIC #1 **<END>** g01620726

WORK TOOLS

190-0948 COUPLER GP-QUICK—BLOCK HANDLER

S/N: BXY1-UP

AN ATTACHMENT

SMCS-6129 **i03771153**

NOTE	REF NO	GRAPHIC REF	PART NUMBER	QTY	PART NAME 1 2 3 4 5 6 (PRODUCT LEVEL)	SEE PAGE
	1	2	**3B-4632**	8	PIN-COTTER	
	2	2	**3B-8489**	4	FITTING-GREASE	
Y	3	2	**112-1817**	2	VALVE GP-MANUAL	1636
Y	4	2	*190-0949*	1	FRAME GP-QUICK COUPLER	2037
	5	2	**192-9832**	1	VALVE AS	
M		2	**1R-5396**	12	BOLT (M6X1X35-MM)	
		2	**192-9834**	1	VALVE-CHECK	
		2	**192-9835**	2	VALVE-BALL	
	6	2	**192-9838**	4	PIN	
	7	2	**192-9839**	4	PIN	
Y	8	2	**194-9203**	4	CYLINDER GP-COUPLER	1421
I	9	1	**195-0609**	1	HOSE AS	
I	10	1	**195-0610**	1	HOSE AS	
I	11	1	**195-0611**	1	HOSE AS	
I	12	1	**195-0612**	1	HOSE AS	
I	13	1	**195-0613**	4	HOSE AS	
I	14	1	**195-0614**	1	HOSE AS	
I	15	1	**195-0615**	1	HOSE AS	
	16	2	**201-0184**	2	BLOCK	
Y	17	1	*204-4853*	1	PLATE & FILM GP	2087
	18	2	**204-5486**	4	PLATE AS	
	19	1	**204-9523**	1	PLATE	
	20	1	**204-9524**	1	PLATE	
	21	1	**204-9525**	1	PLATE	
	22	1	**204-9957**	1	PLATE	
	23	2	**205-1115**	2	BLOCK-FLANGE	
	24	2	**214-8899**	2	PLATE	
	25	1	**214-8900**	1	PLATE	
I	26	2	**215-5503**	2	HOSE AS	
M	27	2	**129-3181**	4	BOLT-SOCKET HEAD (M10X1.5X55-MM)	
	28	2	**1P-3704**	2	SEAL-RECTANGULAR	
	29	2	*2U-6826*	12	CONNECTOR AS	
					(EACH INCLUDES)	
		2	**6V-8397**	1	SEAL-O-RING	
		2	**6V-9028**	1	SEAL-O-RING	
		2	**260-9155**	1	CONNECTOR	
	30	2	**3J-1907**	4	SEAL-O-RING	
	31	2	**4I-6287**	2	COUPLING	
	32	2	**6V-8237**	8	WASHER (26X44X4-MM THK)	
	33	2	**6V-8397**	20	SEAL-O-RING	
	34	2	**6V-8398**	10	SEAL-O-RING	
	35	2	**6V-9028**	16	SEAL-O-RING	
	36	2	**6V-9843**	2	TEE-SWIVEL	
	37	2	**6V-9851**	2	ELBOW	
	38	2	**7U-9224**	4	PLUG	
M	39	2	**8T-1160**	4	BOLT-SOCKET HEAD (M10X1.5X50-MM)	
	40	1,2	**8T-4121**	24	WASHER-HARD (11X21X2.5-MM THK)	
M	41	1	**8T-4136**	20	BOLT (M10X1.5X25-MM)	
M	42	2	**8T-4140**	8	BOLT (M16X2X60-MM)	
M	43	2	**8T-4194**	8	BOLT (M12X1.75X50-MM)	
	44	2	**8T-4223**	8	WASHER-HARD (13.5X25.5X3-MM THK)	
	45	2	**8T-6725**	4	CONNECTOR	
	46	2	**8T-6850**	10	SEAL-O-RING	
	47	2	**8T-7488**	6	CONNECTOR	
	48	1	**9F-2247**	4	PLUG-PIPE	
	49	2	**9X-2085**	2	ELBOW	

190-0948 **COUPLER GP-QUICK** *(contd.)* **i03771153**

I-REFER TO HYDRAULIC INFORMATION SYSTEM
M-METRIC PART
Y-SEPARATE ILLUSTRATION

190-0948 **COUPLER GP-QUICK** *(contd.)* **i03771153**

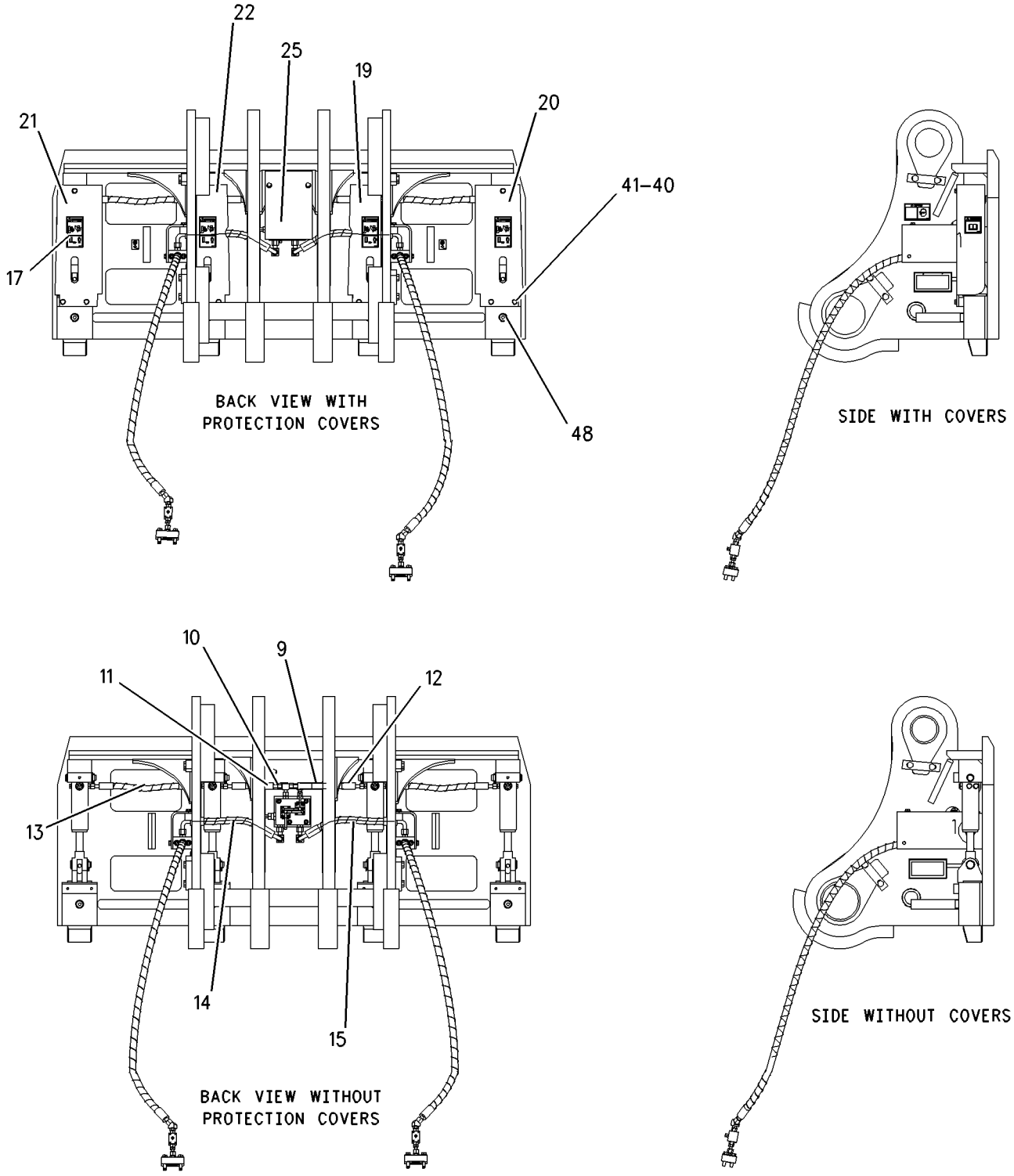

GRAPHIC #1 g00855482

190-0948 **COUPLER GP-QUICK** *(contd.)* **i03771153**

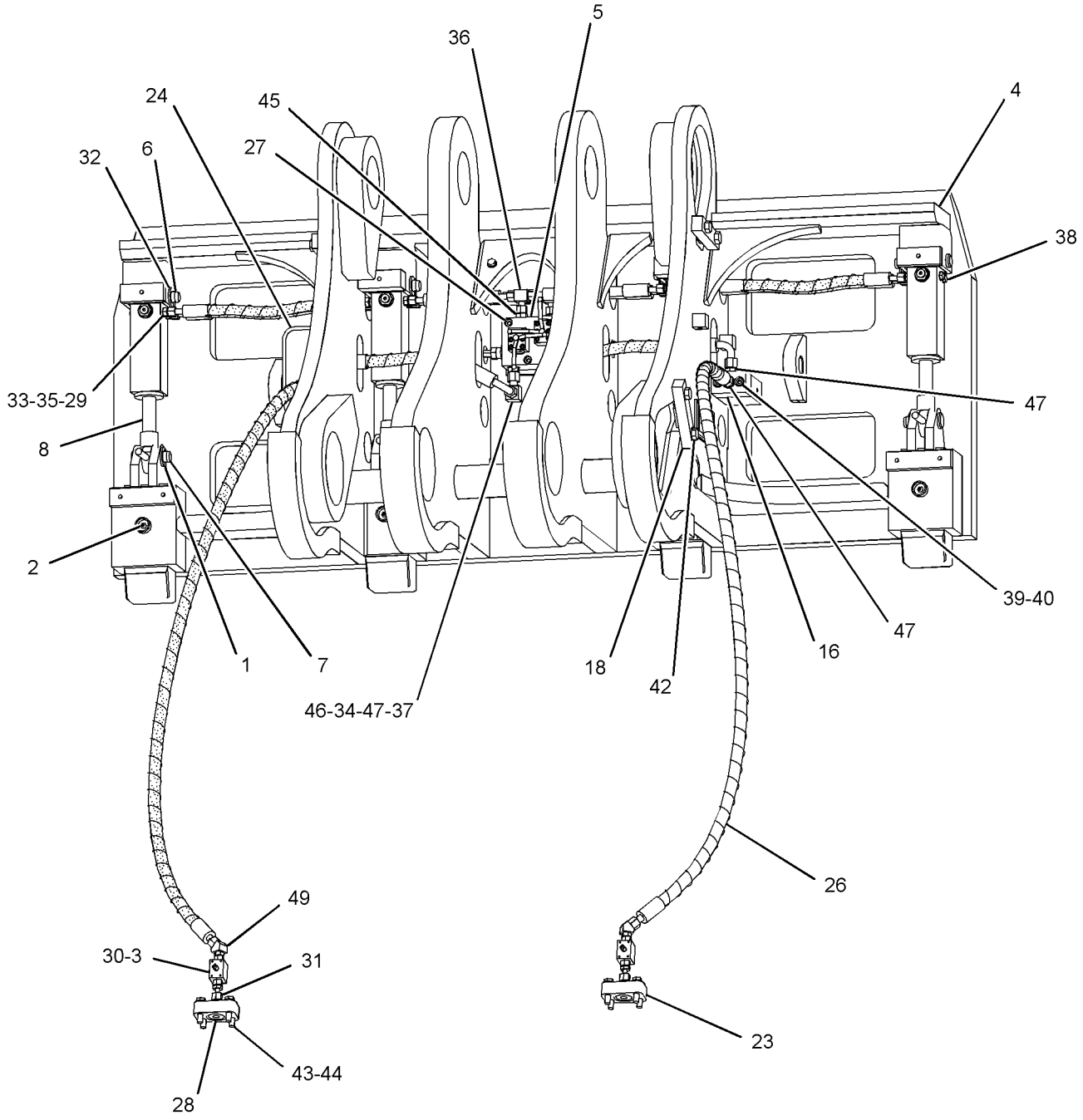

GRAPHIC #2 **<END>** g02038847

WORK TOOLS

208-5336 EDGE AS-BASE

S/N: BXY1-UP

FIELD INSTALLATION

SMCS-6801 **i01972640**

NOTE	REF NO	GRAPHIC REF	PART NUMBER	QTY	PART NAME 1 2 3 4 5 6 (PRODUCT LEVEL)	SEE PAGE
	1	1	**114-0464**	8	ADAPTER	

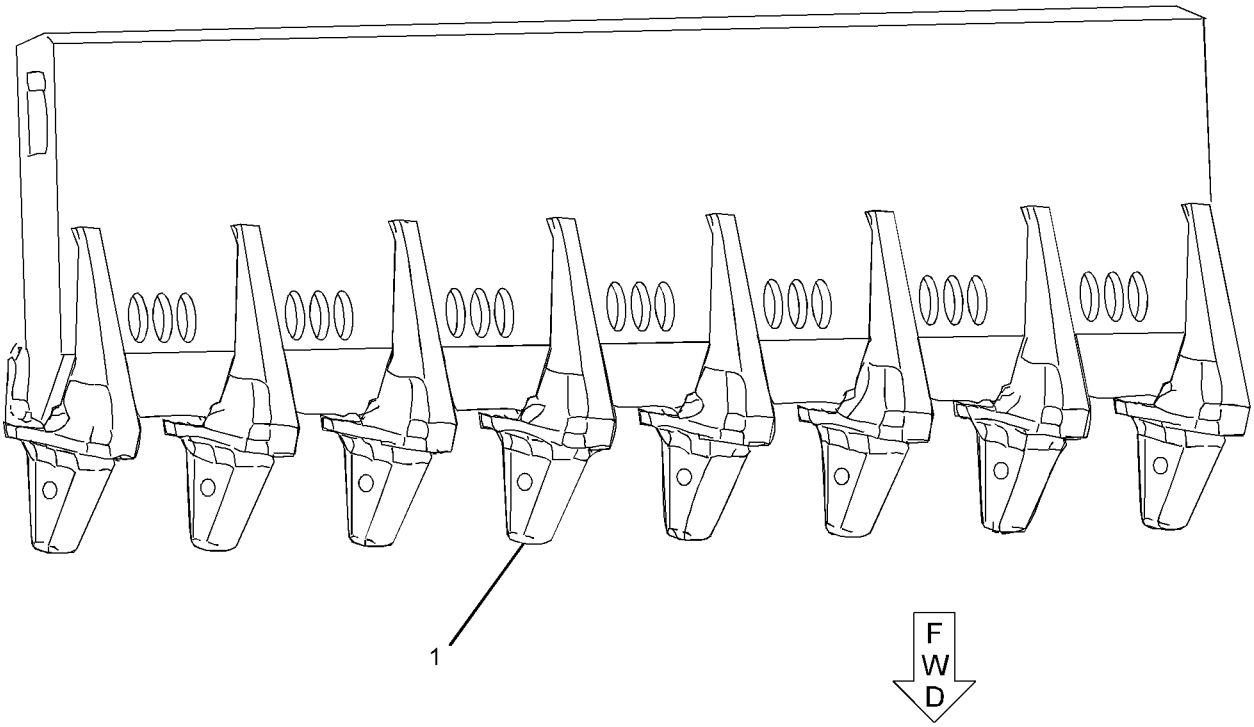

GRAPHIC #1 **<END>** g01047059

WORK TOOLS

236-7043 EDGE AS-BASE

S/N: BXY1-UP

FIELD INSTALLATION

SMCS-6801 **i02503749**

NOTE	REF NO	GRAPHIC REF	PART NUMBER	QTY	PART NAME 1 2 3 4 5 6 (PRODUCT LEVEL)	SEE PAGE
	1	1	**186-3294**	7	ADAPTER-TIP	
	2	1	**8P-9770**	1	PLATE	

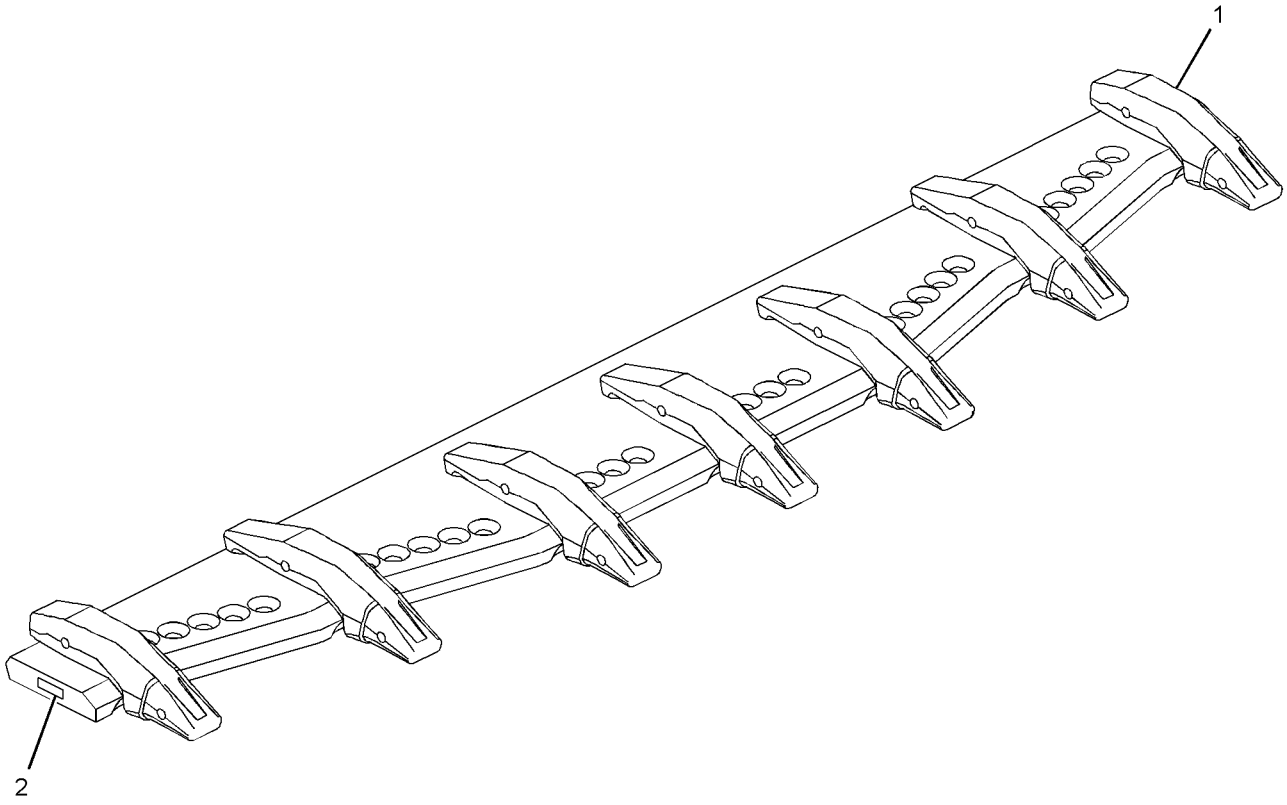

GRAPHIC #1 **<END>** g01282343

WORK TOOLS

275-6048 EDGE AS-BASE

S/N: BXY1-UP
K-130
FIELD INSTALLATION

SMCS-6801 **i02627846**

NOTE	REF NO	GRAPHIC REF	PART NUMBER	QTY	PART NAME 1 2 3 4 5 6 (PRODUCT LEVEL)	SEE PAGE
	1	1	**135-9562**	5	LUG-MOUNTING	
	2	1	**232-0138**	4	ADAPTER-TIP (K-130, CENTER)	
	3	1	**232-0139**	2	ADAPTER-TIP (K-130, CORNER)	

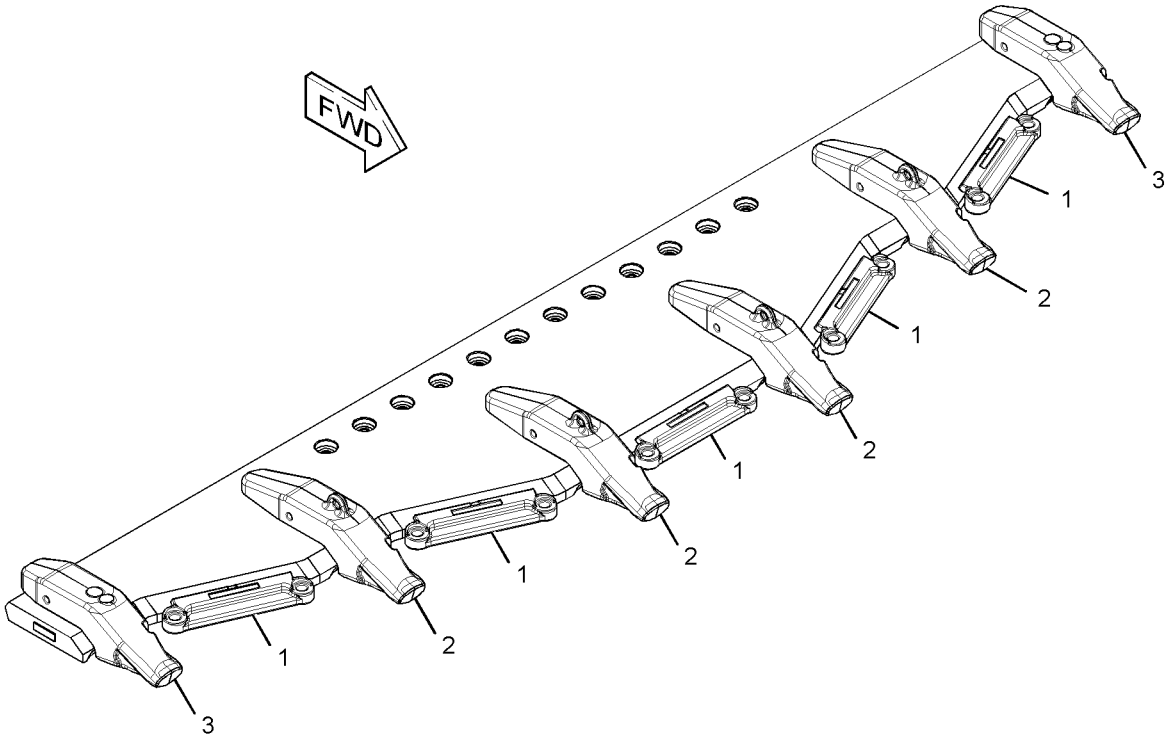

GRAPHIC #1 **<END>** g01337824

WORK TOOLS

104-4369 EDGE GP-BIT & CUTTING

S/N: BXY1-UP
AN ATTACHMENT

SMCS-6801 **i00176707**

NOTE	PART NUMBER	QTY	PART NAME 1 2 3 4 5 6 (PRODUCT LEVEL)	SEE PAGE
	5P-8823	12	BOLT-PLOW (1-1/4-7X105MM)	
	104-5841	2	EDGE-CUTTING	
	1U-0761	2	EDGE-END	
	3K-9770	12	NUT-FULL (1-1/4-7 THD)	

<END>

132-1071 EDGE GP-CUTTING

S/N: BXY1-UP
AN ATTACHMENT

SMCS-6801 **i00176314**

NOTE	PART NUMBER	QTY	PART NAME 1 2 3 4 5 6 (PRODUCT LEVEL)	SEE PAGE
	5P-8823	12	BOLT-PLOW (1-1/4-7X4.13-IN)	
	132-1069	1	EDGE-CUTTING	
	132-1070	1	EDGE-CUTTING	
	123-0335	1	EDGE-END (LH)	
	123-0334	1	EDGE-END (RH)	
	3K-9770	12	NUT-FULL (1-1/4-7-THD)	

<END>

183-5318 EDGE GP-CUTTING

S/N: BXY1-UP
AN ATTACHMENT

SMCS-6801 **i01286063**

NOTE	PART NUMBER	QTY	PART NAME 1 2 3 4 5 6 (PRODUCT LEVEL)	SEE PAGE
	6V-8360	12	BOLT-PLOW (1-1/4-7X4.53IN)	
	183-5325	2	EDGE-CUTTING	
	1U-0761	2	EDGE-END	
	3K-9770	12	NUT-FULL (1-1/4-7 THD)	

<END>

183-5321 EDGE GP-CUTTING

S/N: BXY1-UP
FOR USE WITH 171-4056 GENERAL PURPOSE BUCKET
AN ATTACHMENT

SMCS-6801 **i01286068**

NOTE	PART NUMBER	QTY	PART NAME 1 2 3 4 5 6 (PRODUCT LEVEL)	SEE PAGE
	6V-8360	14	BOLT-PLOW (1-1/4-7X4.53IN)	
	183-5324	7	EDGE-SEGMENT	
	3K-9770	14	NUT-FULL (1-1/4-7 THD)	

<END>

WORK TOOLS

208-5262 EDGE GP-CUTTING

S/N: BXY1-UP
FOR USE WITH GENERAL PURPOSE BUCKET W/ 3.6M BOOM
AN ATTACHMENT

SMCS-6801 **i01832171**

NOTE	PART NUMBER	QTY	PART NAME 1 2 3 4 5 6 (PRODUCT LEVEL)	SEE PAGE
	6V-8360	12	BOLT-PLOW (1-1/4-7X4.53IN)	
	208-5260	2	EDGE-SEGMENT	
	3K-9770	12	NUT-FULL (1 1/4X7 THD)	
	1U-0071	2	PLATE AS-RH	

<END>

208-8840 EDGE GP-CUTTING

S/N: BXY1-UP
FOR USE WITH WHEEL LOADER ROCK BUCKETS
AN ATTACHMENT

SMCS-6801 **i01703541**

NOTE	PART NUMBER	QTY	PART NAME 1 2 3 4 5 6 (PRODUCT LEVEL)	SEE PAGE
	6V-6535	28	BOLT-PLOW (1-1/4X3.75-IN)	
	9W-5733	1	EDGE-CUTTING (CENTER)	
	9W-5731	1	EDGE-CUTTING (LH)	
	9W-5732	1	EDGE-CUTTING (LH)	
	9W-5735	1	EDGE-CUTTING (RH)	
	9W-5736	1	EDGE-CUTTING (RH)	
	9W-5734	1	EDGE-SEGMENT (CENTER)	
	3K-9770	28	NUT-FULL (1-1/4-7-THD)	

<END>

208-8841 EDGE GP-CUTTING

S/N: BXY1-UP
HEAVY DUTY
FOR USE WITH WHEEL LOADER ROCK BUCKETS
AN ATTACHMENT

SMCS-6801 **i01703542**

NOTE	PART NUMBER	QTY	PART NAME 1 2 3 4 5 6 (PRODUCT LEVEL)	SEE PAGE
	6V-6535	28	BOLT-PLOW (1 1/4X3.75 IN)	
	106-1096	1	EDGE-CUTTING	
	106-1094	1	EDGE-CUTTING-LH	
	106-1095	1	EDGE-CUTTING-LH	
	106-1097	1	EDGE-CUTTING-RH	
	106-1098	1	EDGE-CUTTING-RH	
	107-3490	1	EDGE-SEGMENT	
	3K-9770	28	NUT-FULL (1 1/4X7 THD)	

<END>

WORK TOOLS

217-4652 EDGE GP-CUTTING

S/N: BXY1-UP

AN ATTACHMENT

SMCS-6801 **i01966999**

NOTE	PART NUMBER	QTY	PART NAME 1 2 3 4 5 6 (PRODUCT LEVEL)	SEE PAGE
	6V-8360	14	BOLT-PLOW (1-1/4-7X4.53IN)	
	208-5260	7	EDGE-SEGMENT	
	3K-9770	14	NUT-FULL (1 1/4X7 THD)	

<END>

229-6388 EDGE GP-CUTTING

S/N: BXY1-UP

AN ATTACHMENT

SMCS-6801 **i02743347**

NOTE	PART NUMBER	QTY	PART NAME 1 2 3 4 5 6 (PRODUCT LEVEL)	SEE PAGE
	6V-6535	28	BOLT-PLOW (1-1/4-7X3.74-IN)	
	208-5281	1	EDGE-CUTTING (A.R.M., LH)	
	208-5282	1	EDGE-CUTTING (A.R.M., LH)	
	208-5285	1	EDGE-CUTTING (A.R.M., RH)	
	208-5286	1	EDGE-CUTTING (A.R.M., RH)	
	208-5283	1	EDGE-CUTTING (A.R.M., CENTER)	
	208-5284	1	EDGE-SEGMENT (A.R.M., CENTER)	
	3K-9770	28	NUT-FULL (1-1/4-7-THD)	

<END>

WORK TOOLS

310-9110 EDGE GP-CUTTING

S/N: BXY1-UP
FOR USE WITH 280-4060—PAGE 2017
FIELD INSTALLATION

SMCS-6801 **i02789733**

NOTE	REF NO	GRAPHIC REF	PART NUMBER	QTY	PART NAME 1 2 3 4 5 6 (PRODUCT LEVEL)	SEE PAGE
	1	1	**310-9106**	1	EDGE-SEGMENT (CENTER)	
	2	1	**310-9107**	2	EDGE-SEGMENT	
	3	1	**310-9108**	1	EDGE-SEGMENT (RH)	
	4	1	**310-9109**	1	EDGE-SEGMENT (LH)	
	5	1	**3K-9770**	23	NUT-FULL (1-1/4-7-THD)	
	6	1	**6V-6535**	23	BOLT-PLOW (1-1/4-7X3.74-IN)	

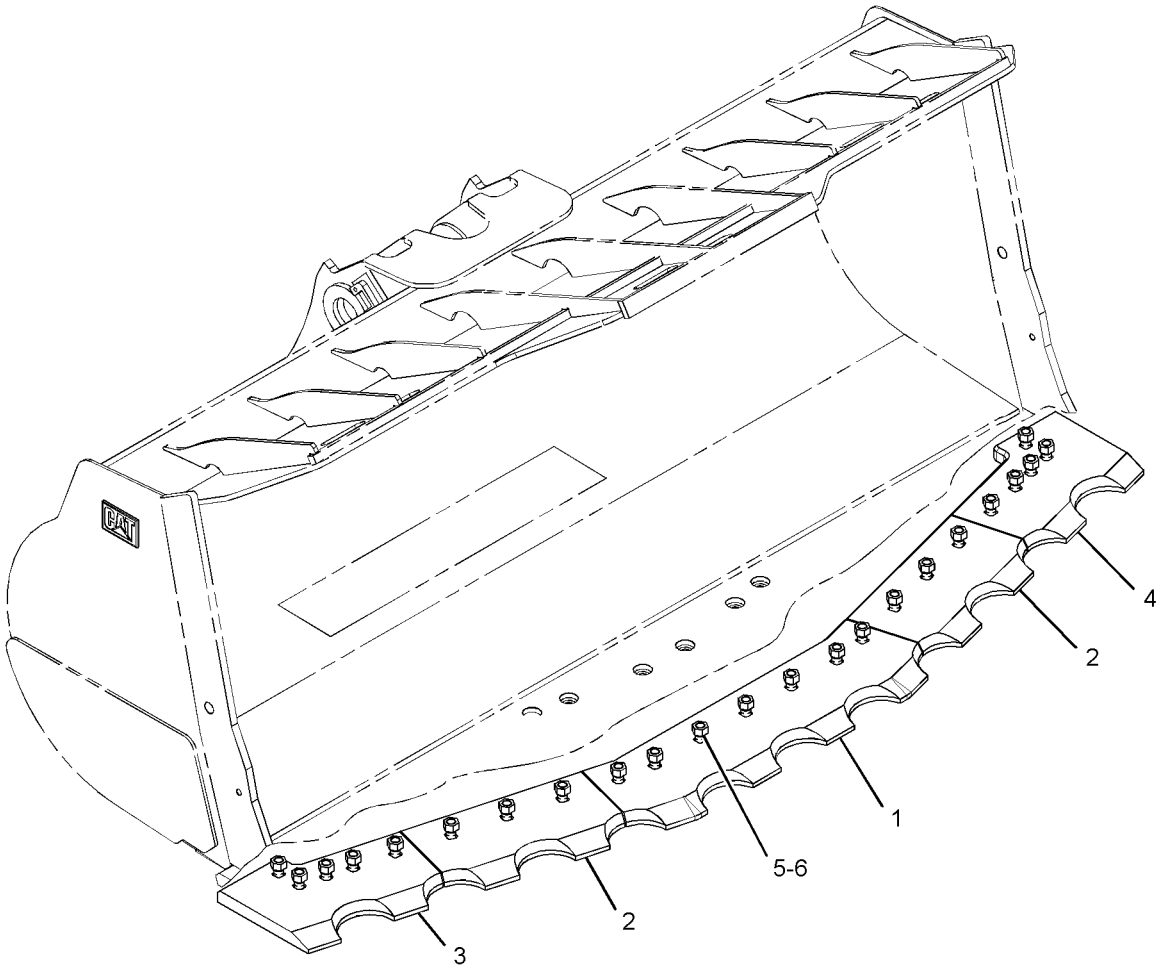

GRAPHIC #1 **<END>** g01411610

WORK TOOLS

315-0083 EDGE GP-CUTTING

S/N: BXY1-UP

AN ATTACHMENT

SMCS-6801 **i03801209**

NOTE	REF NO	GRAPHIC REF	PART NUMBER	QTY	PART NAME 1 2 3 4 5 6 (PRODUCT LEVEL)	SEE PAGE
	1	1	**315-0080**	1	EDGE-SEGMENT	
	2	1	**315-0081**	3	EDGE-SEGMENT (RH)	
	3	1	**315-0082**	3	EDGE-SEGMENT (LH)	
	4	1	**3K-9770**	21	NUT-FULL (1-1/4-7-THD)	
	5	1	**6V-6535**	21	BOLT-PLOW (1-1/4-7X3.74-IN)	

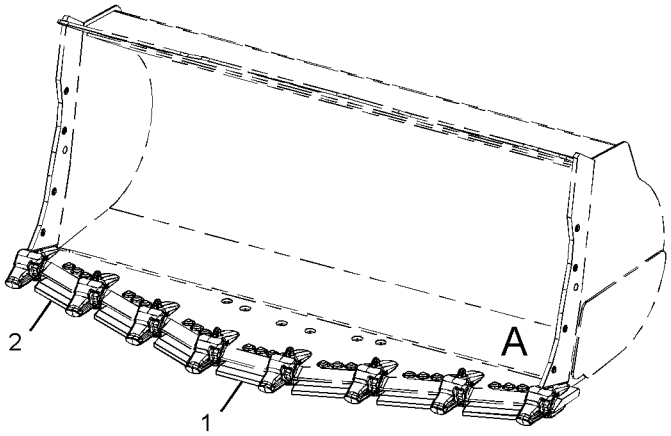

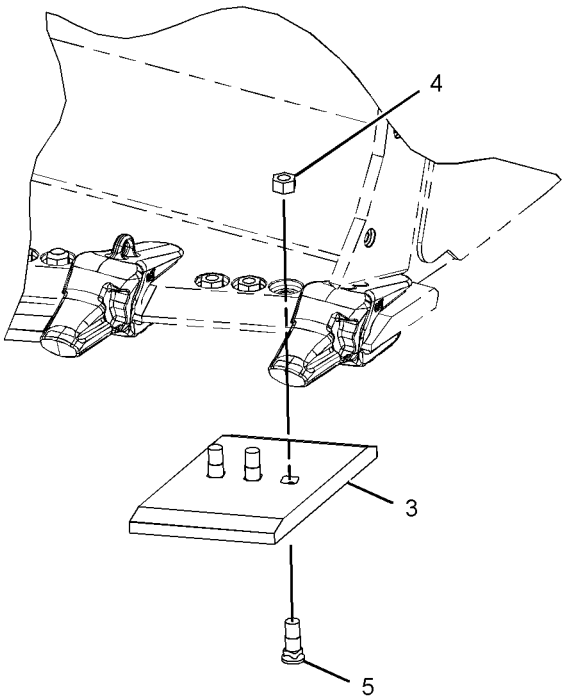

VIEW OF AREA A
(EXPLODED)

GRAPHIC #1 **<END>** g02064973

WORK TOOLS

337-0950 EDGE GP-CUTTING

S/N: BXY1-UP

AN ATTACHMENT

SMCS-6801 **i03332859**

NOTE	REF NO	GRAPHIC REF	PART NUMBER	QTY	PART NAME 1 2 3 4 5 6 (PRODUCT LEVEL)	SEE PAGE
	1	1	**336-7877**	1	EDGE-CUTTING (RIGHT)	
	2	1	**336-7878**	1	EDGE-CUTTING (LEFT)	
	3	1	**336-7879**	1	EDGE-CUTTING (RIGHT CENTER)	
	4	1	**336-7880**	1	EDGE-CUTTING (LEFT CENTER)	
	5	1	**336-7881**	1	EDGE-CUTTING (CENTER)	
	6	1	**3K-9770**	26	NUT-FULL (1-1/4-7-THD)	
	7	1	**6V-6535**	26	BOLT-PLOW (1-1/4-7X3.74-IN)	

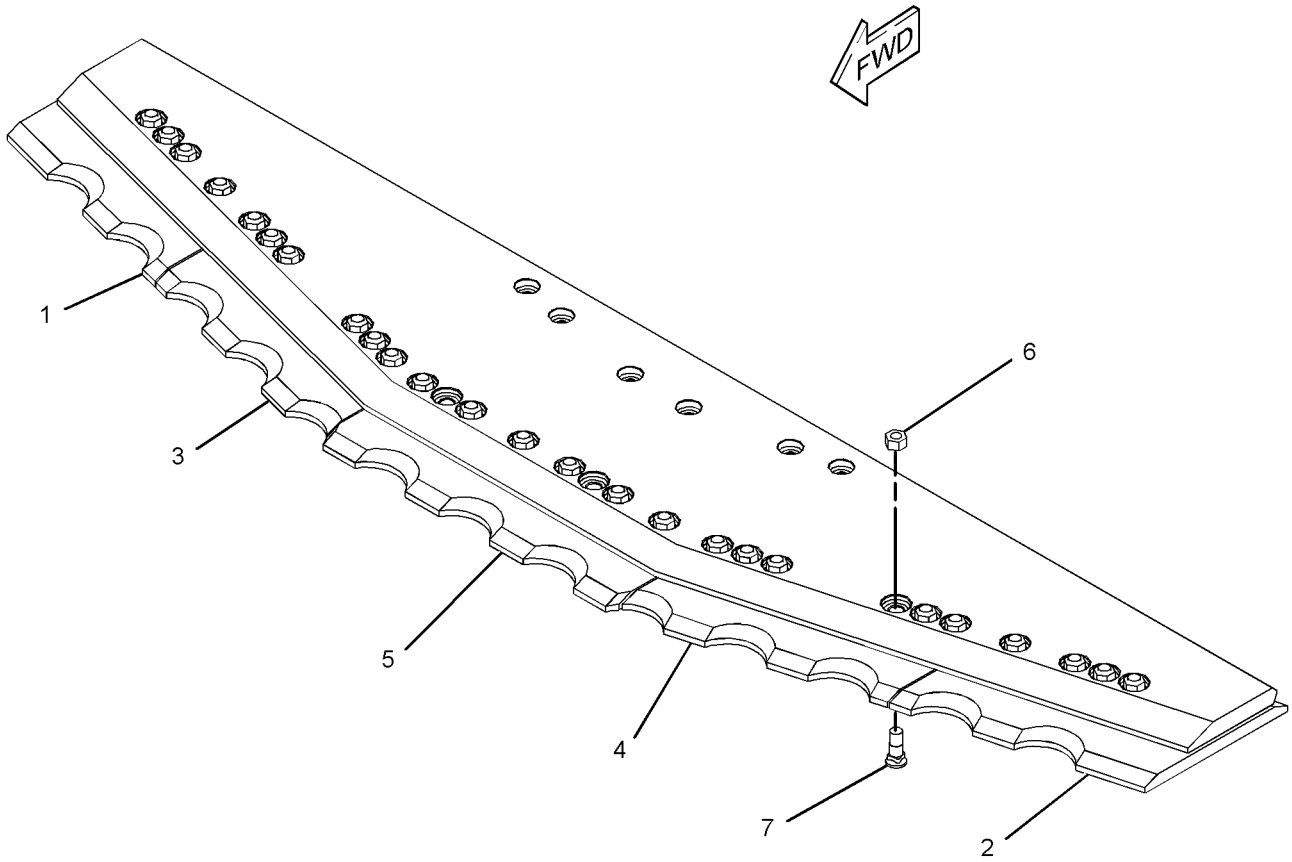

GRAPHIC #1 **<END>** g02025210

WORK TOOLS

337-3452 EDGE GP-CUTTING

S/N: BXY1-UP

AN ATTACHMENT

SMCS-6801 **i03794789**

NOTE	REF NO	GRAPHIC REF	PART NUMBER	QTY	PART NAME 1 2 3 4 5 6 (PRODUCT LEVEL)	SEE PAGE
	1	1	**337-3453**	1	EDGE-CUTTING (SERRATED, RH)	
	2	1	**337-3454**	1	EDGE-CUTTING (SERRATED, LH)	
	3	1	**337-3455**	2	EDGE-CUTTING (SERRATED, CENTER)	
	4	1	**3K-9770**	22	NUT-FULL (1-1/4-7-THD)	
	5	1	**6V-8360**	22	BOLT-PLOW (1-1/4-7X4.53-IN)	

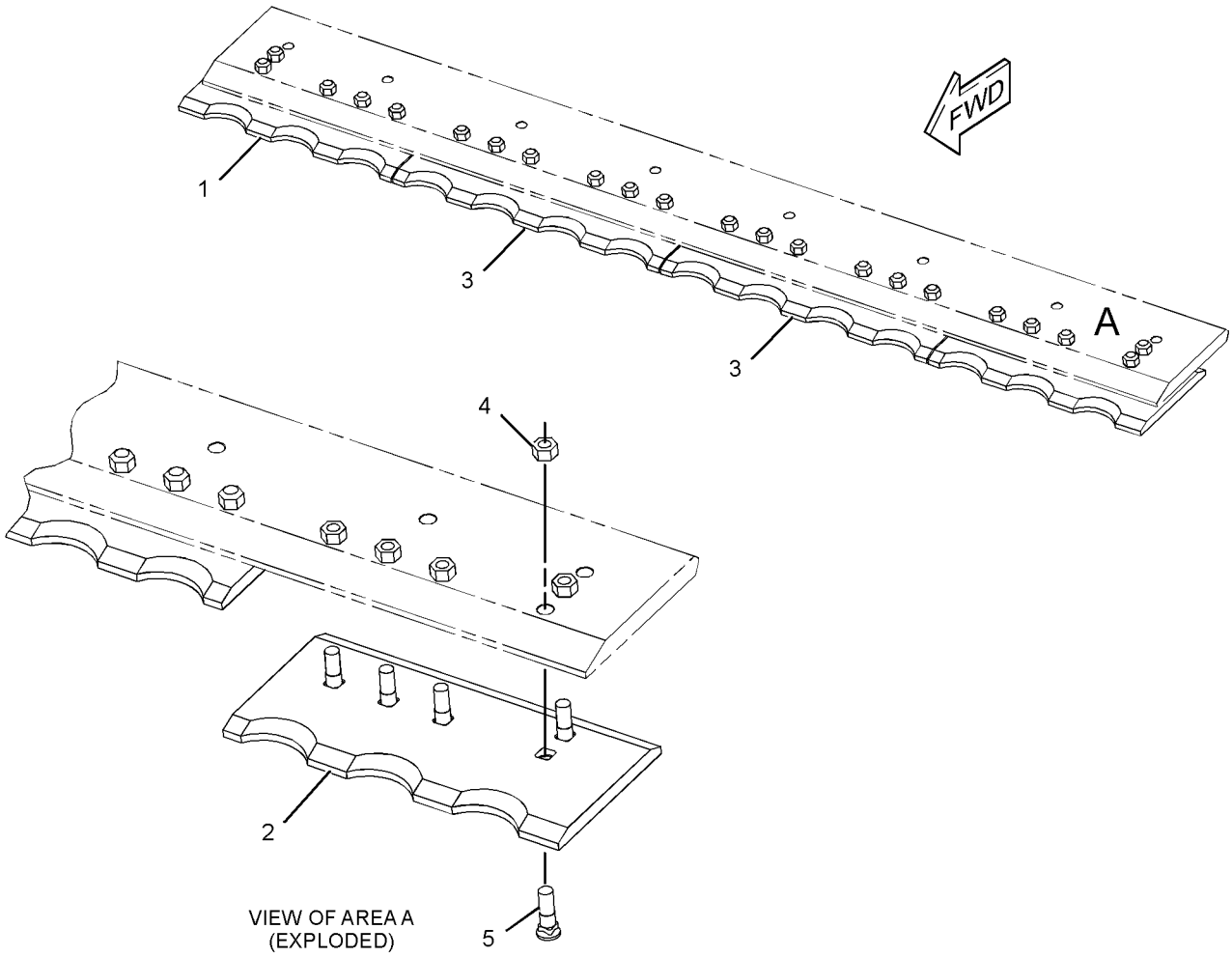

GRAPHIC #1 **<END>** g02061695

WORK TOOLS

8E-9898 EDGE GP-SEGMENT

S/N: BXY1-UP
AN ATTACHMENT

SMCS-6818 **i00176740**

NOTE	PART NUMBER	QTY	PART NAME 1 2 3 4 5 6 (PRODUCT LEVEL)	SEE PAGE
	6V-6535	21	BOLT-PLOW	
	101-9345	7	COVER	
	3K-9770	21	NUT-FULL (1-1/4-7 THD)	

<END>

107-3533 EDGE GP-SEGMENT

S/N: BXY1-UP
FOR USE WITH 4E-6469 BUCKET GP-ROCK, 9U-4184 BUCKET GP-ROCK, 106-9820 BUCKET GP-ROCK
AN ATTACHMENT

SMCS-6818 **i00967026**

NOTE	PART NUMBER	QTY	PART NAME 1 2 3 4 5 6 (PRODUCT LEVEL)	SEE PAGE
	6V-6535	21	BOLT-PLOW (1-1/4-7X3.74-IN)	
	107-3536	1	EDGE-SEGMENT	
	107-3538	3	EDGE-SEGMENT	
	107-3537	3	EDGE-SEGMENT	
	3K-9770	21	NUT-FULL (1-1/4-7-THD)	

<END>

107-3545 EDGE GP-SEGMENT

S/N: BXY1-UP
AN ATTACHMENT

SMCS-6818 **i00831551**

NOTE	PART NUMBER	QTY	PART NAME 1 2 3 4 5 6 (PRODUCT LEVEL)	SEE PAGE
	6V-6535	21	BOLT-PLOW (1 1/4-7X95MM)	
	107-3536	7	EDGE-SEGMENT	
	3K-9770	21	NUT-FULL (1-1/4-7 THD)	

<END>

109-9051 EDGE GP-SEGMENT

S/N: BXY1-UP
AN ATTACHMENT

SMCS-6818 **i00176591**

NOTE	PART NUMBER	QTY	PART NAME 1 2 3 4 5 6 (PRODUCT LEVEL)	SEE PAGE
	6V-6535	21	BOLT-PLOW	
	101-9435	1	EDGE-SEGMENT	
	101-9437	3	EDGE-SEGMENT-LH	
	101-9436	3	EDGE-SEGMENT-RH	
	3K-9770	21	NUT-FULL (1-1/4-7 THD)	

<END>

WORK TOOLS

124-6346 EDGE GP-SEGMENT

S/N: BXY1-UP

AN ATTACHMENT

SMCS-6818 **i02761058**

NOTE	REF NO	GRAPHIC REF	PART NUMBER	QTY	PART NAME 1 2 3 4 5 6 (PRODUCT LEVEL)	SEE PAGE
	1	1	**109-9080**	1	EDGE-SEGMENT (CENTER)	
	2	1	**109-9081**	3	EDGE-SEGMENT (LH)	
	3	1	**109-9082**	3	EDGE-SEGMENT (RH)	
	4	1	**3K-9770**	21	NUT-FULL (1-1/4-7-THD)	
	5	1	**6V-6535**	21	BOLT-PLOW (1-1/4-7X3.74-IN)	

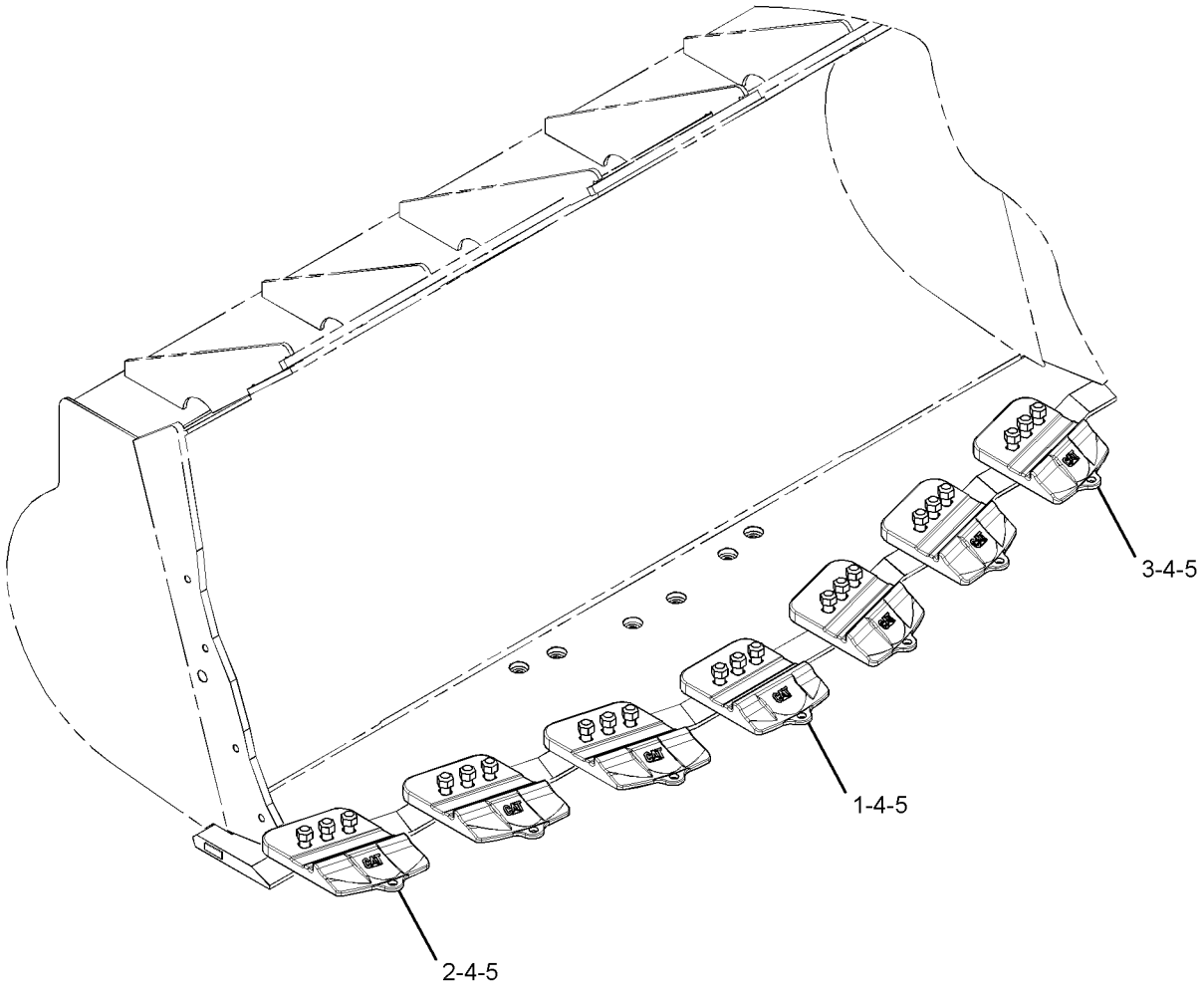

GRAPHIC #1 **<END>** g01386092

WORK TOOLS

9W-5731 EDGE-CUTTING

S/N: BXY1-UP
791.5 MM (31.16 IN.) LONG
PART OF 246-2754 BUCKET GP-ROCK
AN ATTACHMENT

SMCS-6801 **i01025648**

NOTE	PART NUMBER	QTY	PART NAME 1 2 3 4 5 6 (PRODUCT LEVEL)	SEE PAGE
	9W-5733	1	EDGE-CUTTING (CENTER) (706 MM(27.80 IN) LONG)	
	9W-5732	1	EDGE-CUTTING (LH) (731 MM(28.78 IN)LONG)	

<END>

9W-5735 EDGE-CUTTING

S/N: BXY1-UP
731 MM (28.78 IN.) LONG
PART OF 246-2754 BUCKET GP-ROCK
AN ATTACHMENT

SMCS-6801 **i01025650**

NOTE	PART NUMBER	QTY	PART NAME 1 2 3 4 5 6 (PRODUCT LEVEL)	SEE PAGE
	9W-5736		EDGE-CUTTING (RH) (791.5MM(31.16 IN)LONG)	
			QUANTITIES TO BE DETERMINED BY CUSTOMER	

<END>

WORK TOOLS

275-5924 EDGE-CUTTING—RH

S/N: BXY1-UP

FIELD INSTALLATION

SMCS-6801 **i02636672**

NOTE	REF NO	GRAPHIC REF	PART NUMBER	QTY	PART NAME 1 2 3 4 5 6 (PRODUCT LEVEL)	SEE PAGE
					(NO SERVICED PARTS)	

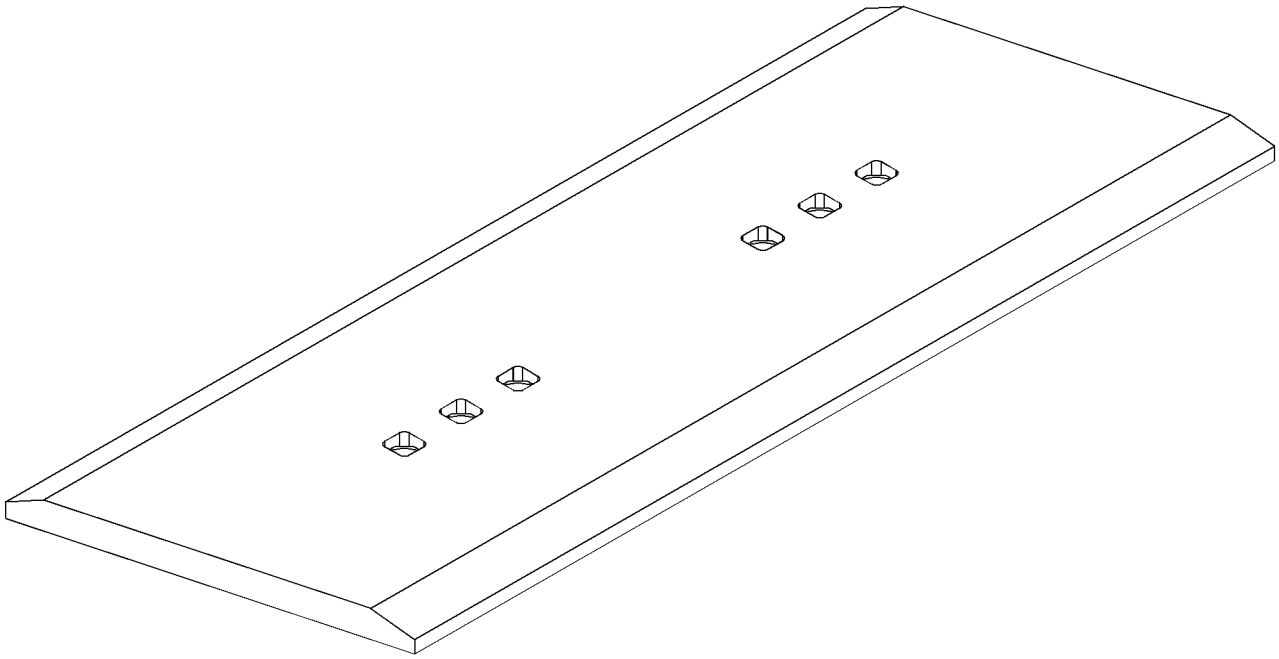

GRAPHIC #1 **<END>** g01347390

WORK TOOLS

275-5925 EDGE-CUTTING—LH

S/N: BXY1-UP

FIELD INSTALLATION

SMCS-6801 **i02636674**

NOTE	REF NO	GRAPHIC REF	PART NUMBER	QTY	PART NAME 1 2 3 4 5 6 (PRODUCT LEVEL)	SEE PAGE
					(NO SERVICED PARTS)	

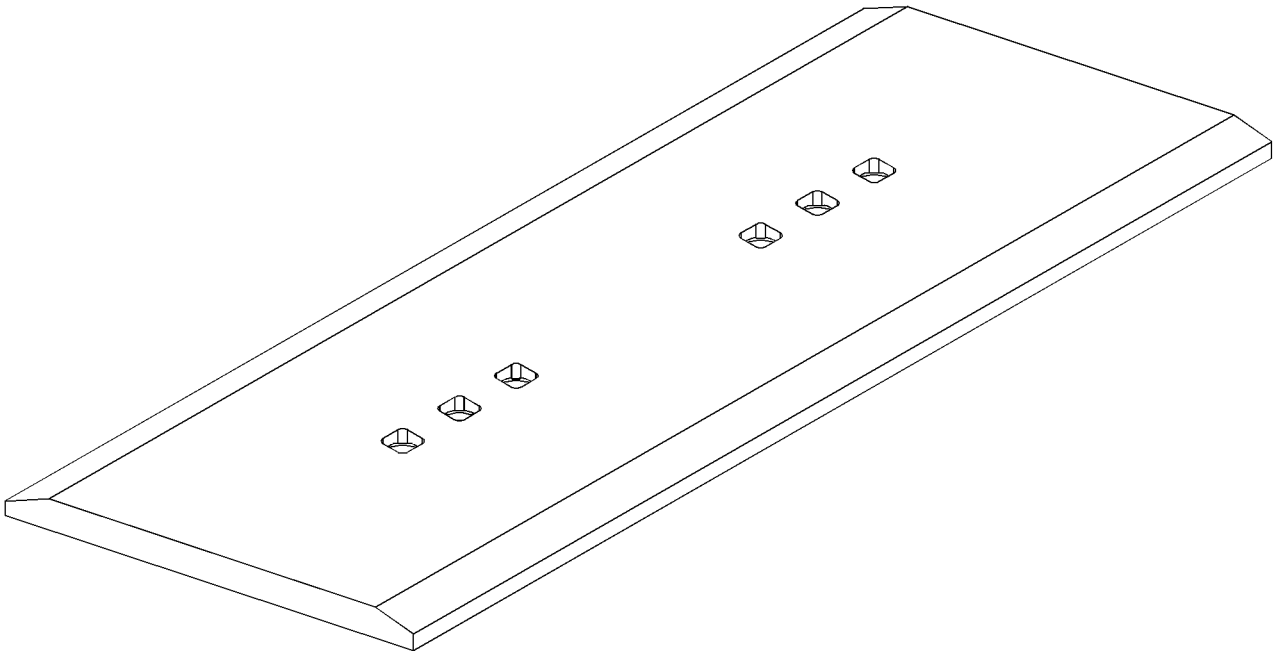

GRAPHIC #1 **<END>** g01347395

WORK TOOLS

275-5926 EDGE-CUTTING

S/N: BXY1-UP
K-110
FIELD INSTALLATION

SMCS-6801 **i02650397**

NOTE	REF NO	GRAPHIC REF	PART NUMBER	QTY	PART NAME 1 2 3 4 5 6 (PRODUCT LEVEL)	SEE PAGE
					(NO SERVICED PARTS)	

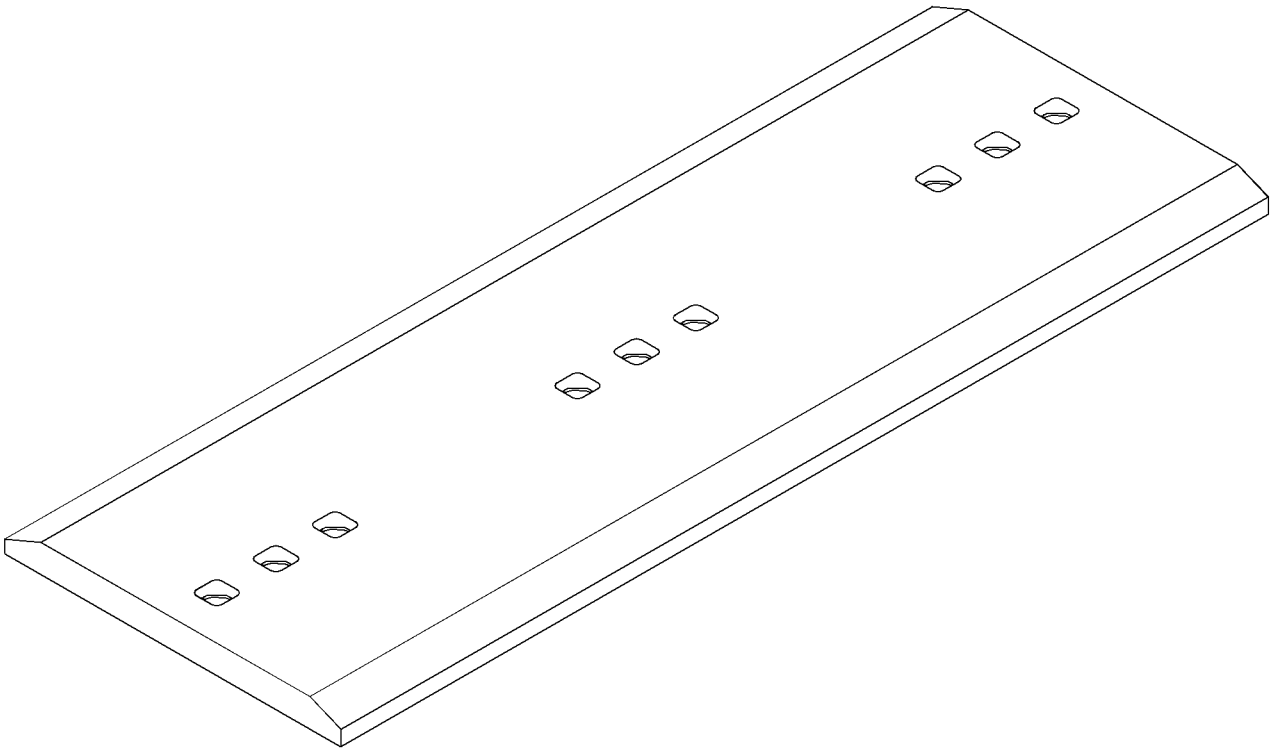

GRAPHIC #1 **<END>** g01339314

WORK TOOLS

275-5980 EDGE-CUTTING

S/N: BXY1-UP

FIELD INSTALLATION

SMCS-6801 **i02681208**

NOTE	REF NO	GRAPHIC REF	PART NUMBER	QTY	PART NAME 1 2 3 4 5 6 (PRODUCT LEVEL)	SEE PAGE
					(NO SERVICED PARTS)	

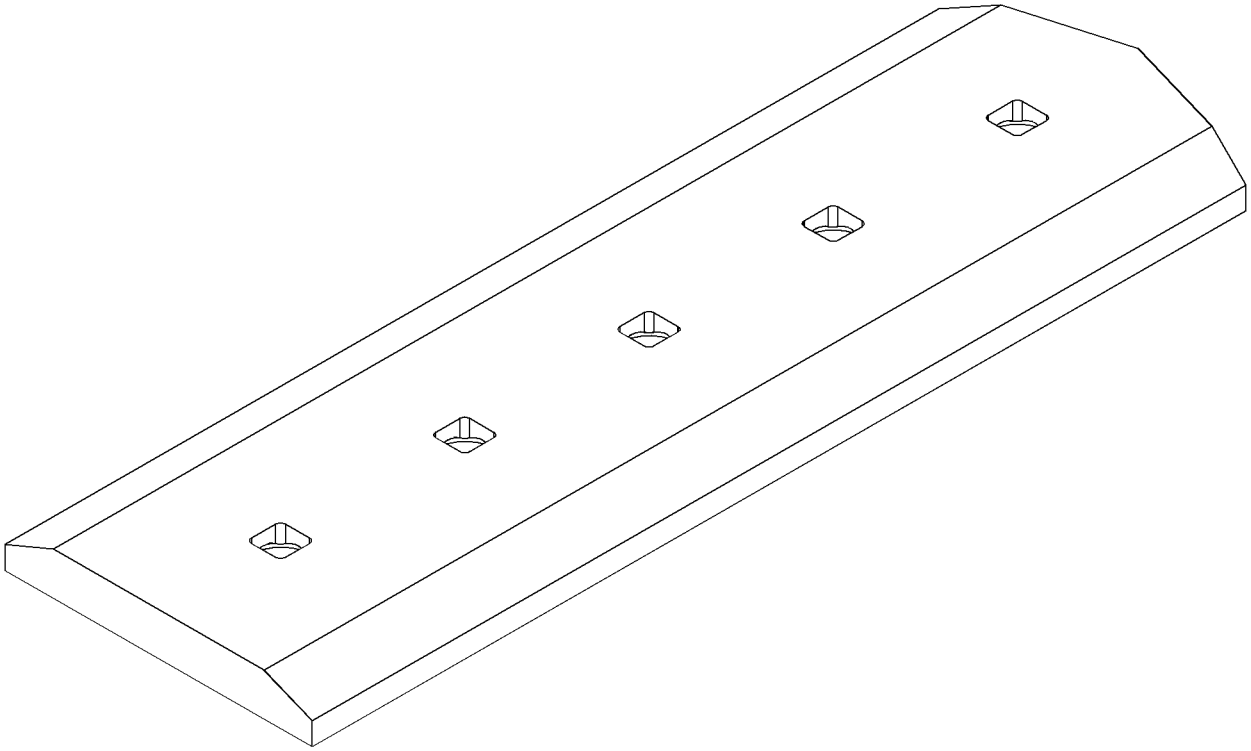

GRAPHIC #1 **<END>** g01347525

WORK TOOLS

275-6008 EDGE-CUTTING—LH

S/N: BXY1-UP

FIELD INSTALLATION

SMCS-6801 **i02728019**

NOTE	REF NO	GRAPHIC REF	PART NUMBER	QTY	PART NAME 1 2 3 4 5 6 (PRODUCT LEVEL)	SEE PAGE
					(NO SERVICED PARTS)	

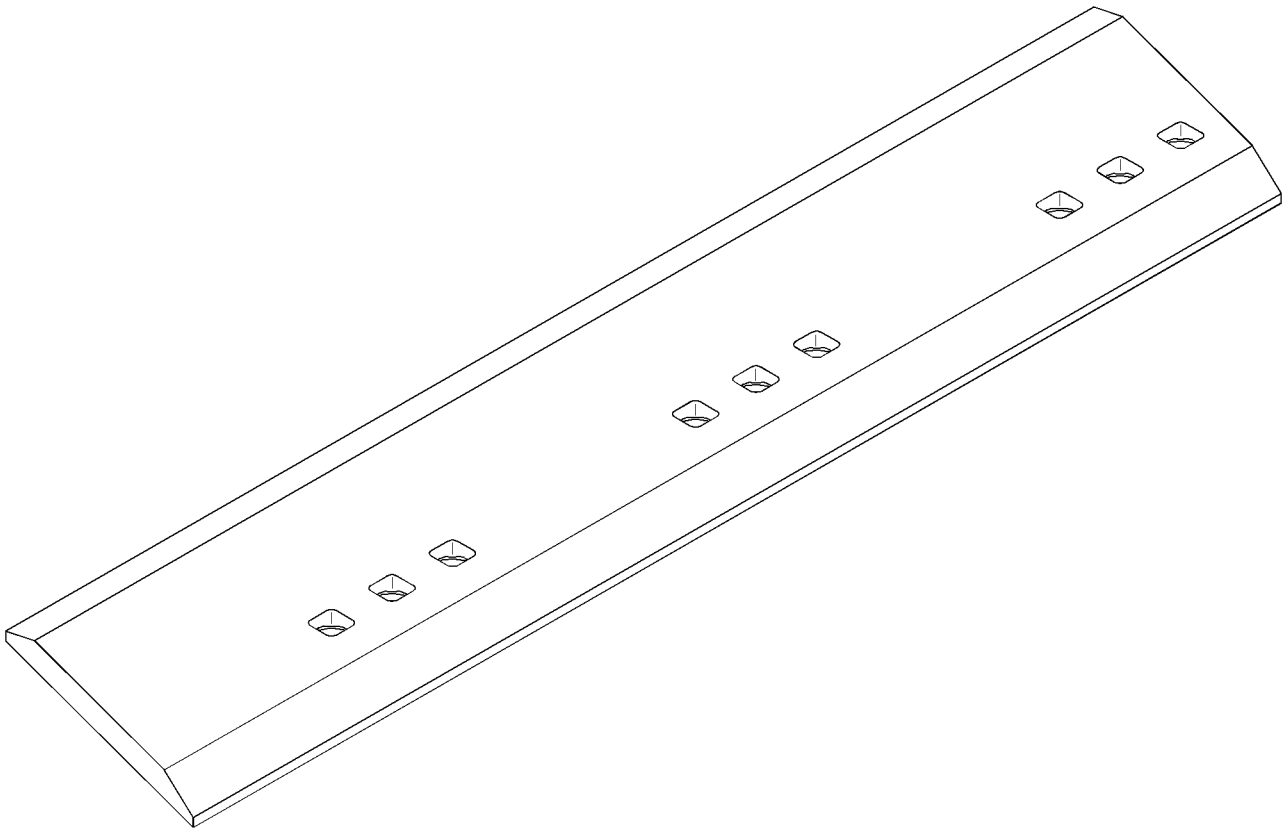

GRAPHIC #1 **<END>** g01368792

WORK TOOLS

275-6009 EDGE-CUTTING—CENTER

S/N: BXY1-UP

FIELD INSTALLATION

SMCS-6801 **i02728013**

NOTE	REF NO	GRAPHIC REF	PART NUMBER	QTY	PART NAME 1 2 3 4 5 6 (PRODUCT LEVEL)	SEE PAGE
					(NO SERVICED PARTS)	

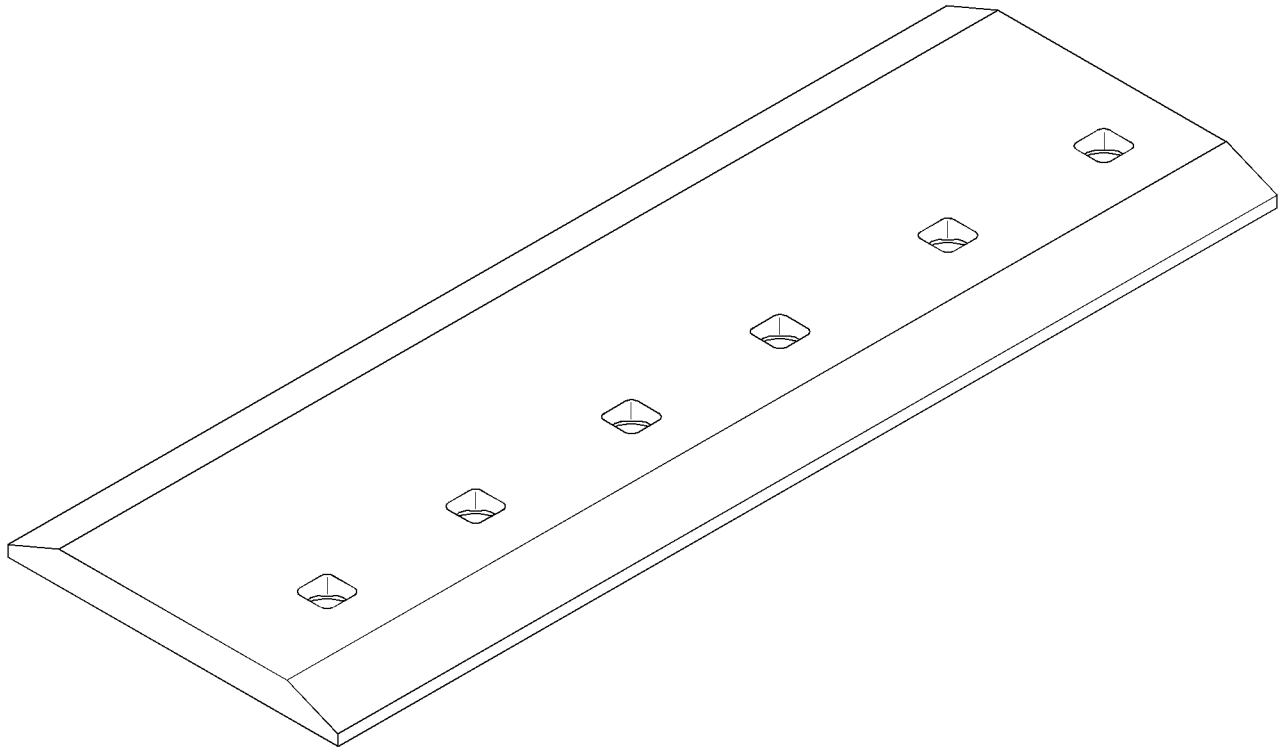

GRAPHIC #1 **<END>** g01368793

WORK TOOLS

275-6010 EDGE-CUTTING—RH

S/N: BXY1-UP

FIELD INSTALLATION

SMCS-6801 **i02728005**

NOTE	REF NO	GRAPHIC REF	PART NUMBER	QTY	PART NAME 1 2 3 4 5 6 (PRODUCT LEVEL)	SEE PAGE
					(NO SERVICED PARTS)	

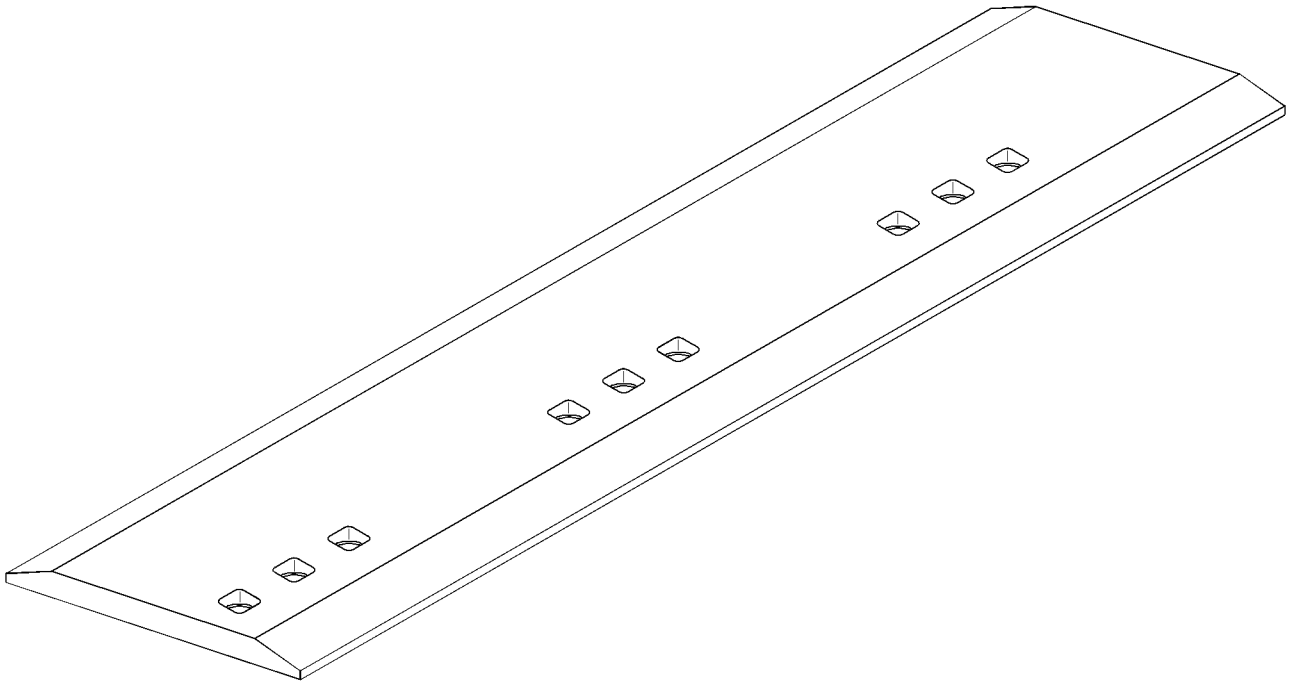

GRAPHIC #1 **<END>** g01368796

WORK TOOLS

280-4060 EDGE-CUTTING—BASE

S/N: BXY1-UP

FIELD INSTALLATION

SMCS-6801 **i02485096**

NOTE	REF NO	GRAPHIC REF	PART NUMBER	QTY	PART NAME 1 2 3 4 5 6 (PRODUCT LEVEL)	SEE PAGE
					(NO SERVICED PARTS)	

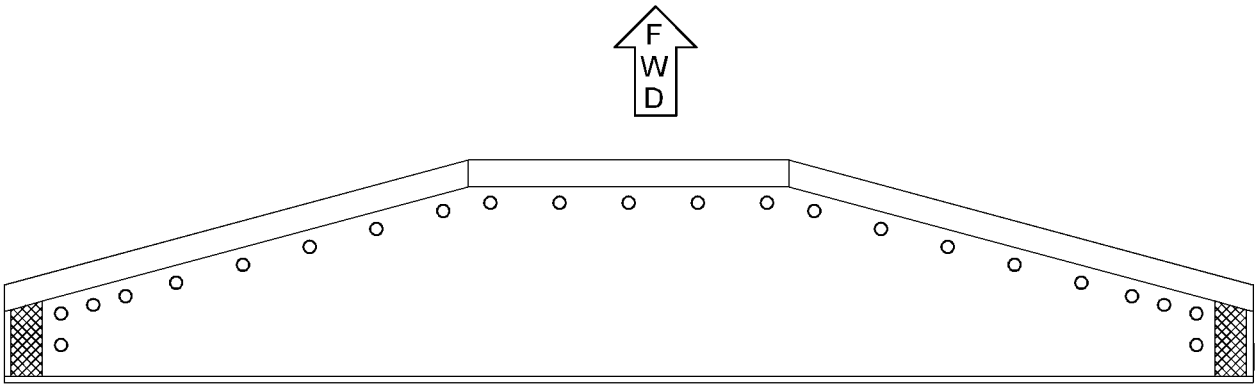

BOTTOM VIEW

GRAPHIC #1 **<END>** g01249889

WORK TOOLS

280-4061 EDGE-CUTTING—RH

S/N: BXY1-UP

FIELD INSTALLATION

SMCS-6801 **i02681206**

NOTE	REF NO	GRAPHIC REF	PART NUMBER	QTY	PART NAME 1 2 3 4 5 6 (PRODUCT LEVEL)	SEE PAGE
					(NO SERVICED PARTS)	

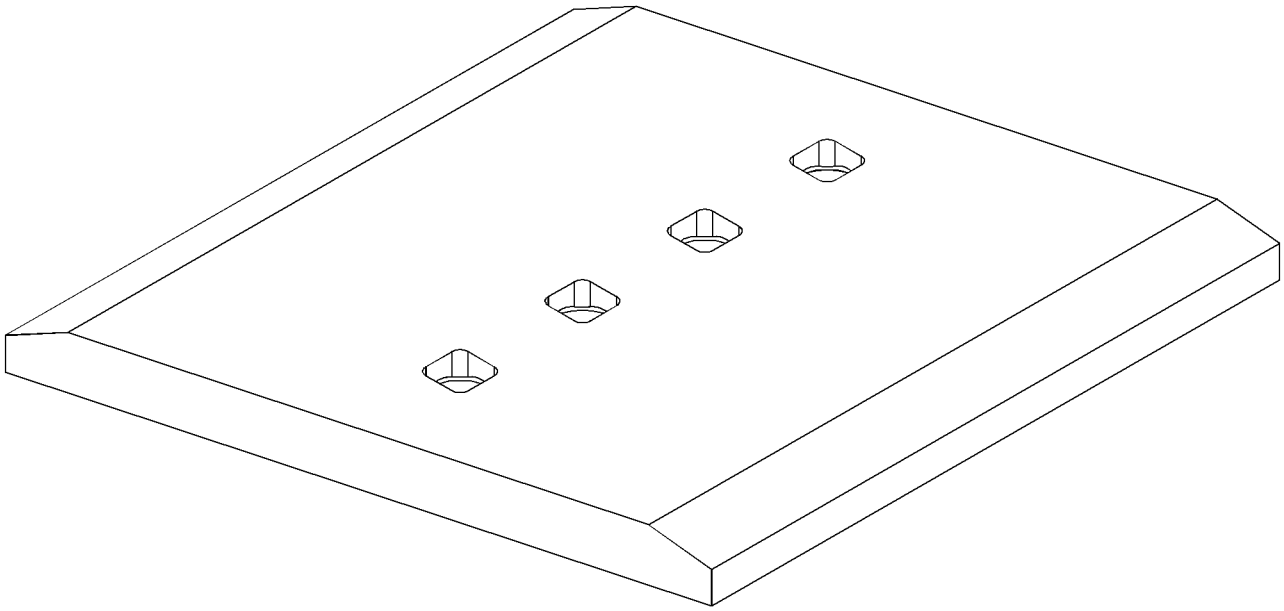

GRAPHIC #1 **<END>** g01347711

WORK TOOLS

280-4062 EDGE-CUTTING—CENTER, RH

S/N: BXY1-UP
40-MM THK
PART OF 310-9060 BUCKET GP-ROCK
AN ATTACHMENT AND FIELD INSTALLATION

SMCS-6801 **i02485098**

NOTE	REF NO	GRAPHIC REF	PART NUMBER	QTY	PART NAME 1 2 3 4 5 6 (PRODUCT LEVEL)	SEE PAGE
					(NO SERVICED PARTS)	

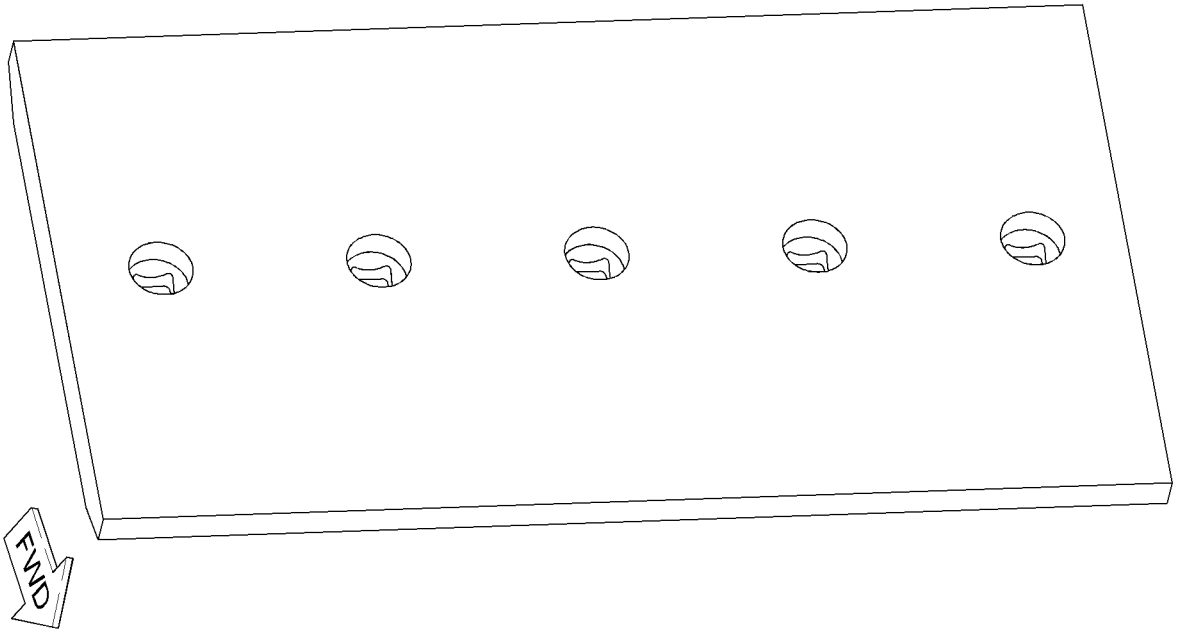

GRAPHIC #1 **<END>** g01248084

WORK TOOLS

280-4063 EDGE-CUTTING

S/N: BXY1-UP
PART OF 310-9060 BUCKET GP-ROCK
FOR USE WITH 280-4060—PAGE 2017
AN ATTACHMENT AND FIELD INSTALLATION

SMCS-6801 **i02681196**

NOTE	REF NO	GRAPHIC REF	PART NUMBER	QTY	PART NAME 1 2 3 4 5 6 (PRODUCT LEVEL)	SEE PAGE
					(NO SERVICED PARTS)	

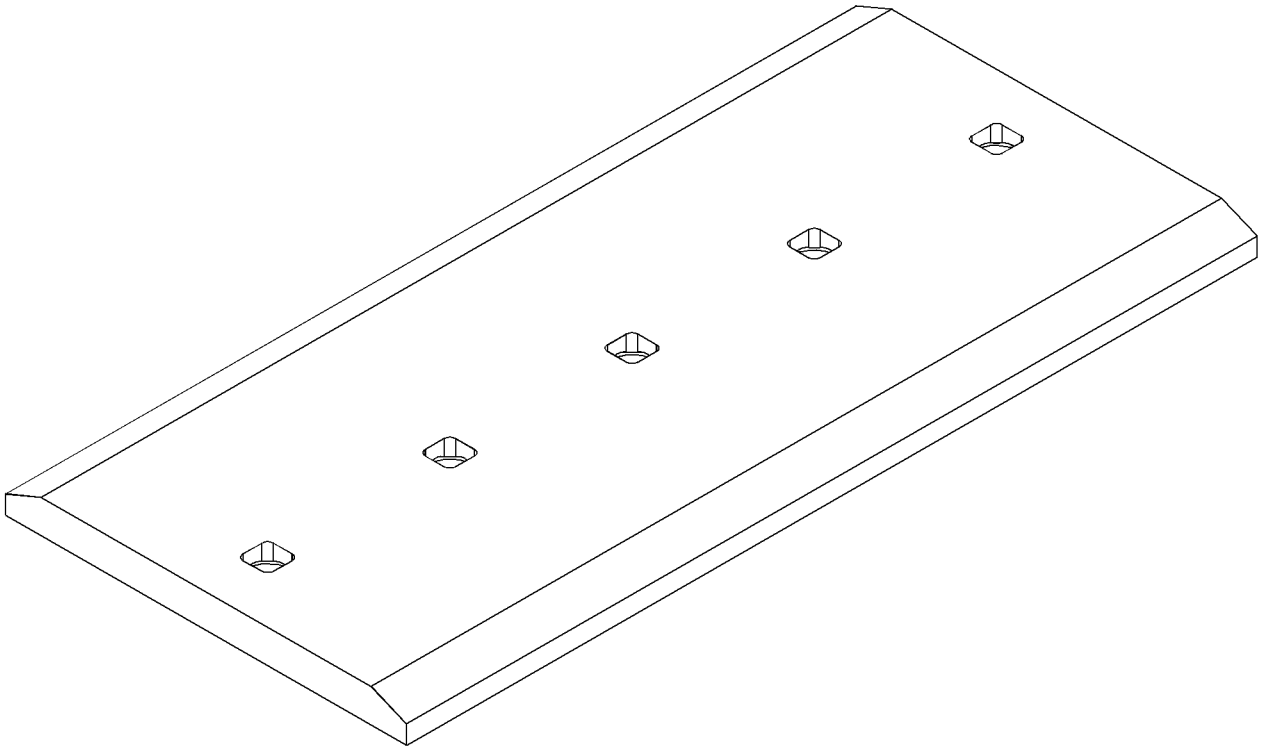

GRAPHIC #1 **<END>** g01347543

WORK TOOLS

280-4064 EDGE-CUTTING—LH

S/N: BXY1-UP
PART OF 310-9060 BUCKET GP-ROCK
FOR USE WITH 280-4060—PAGE 2017
AN ATTACHMENT AND FIELD INSTALLATION

SMCS-6801 **i02681202**

NOTE	REF NO	GRAPHIC REF	PART NUMBER	QTY	PART NAME 1 2 3 4 5 6 (PRODUCT LEVEL)	SEE PAGE
					(NO SERVICED PARTS)	

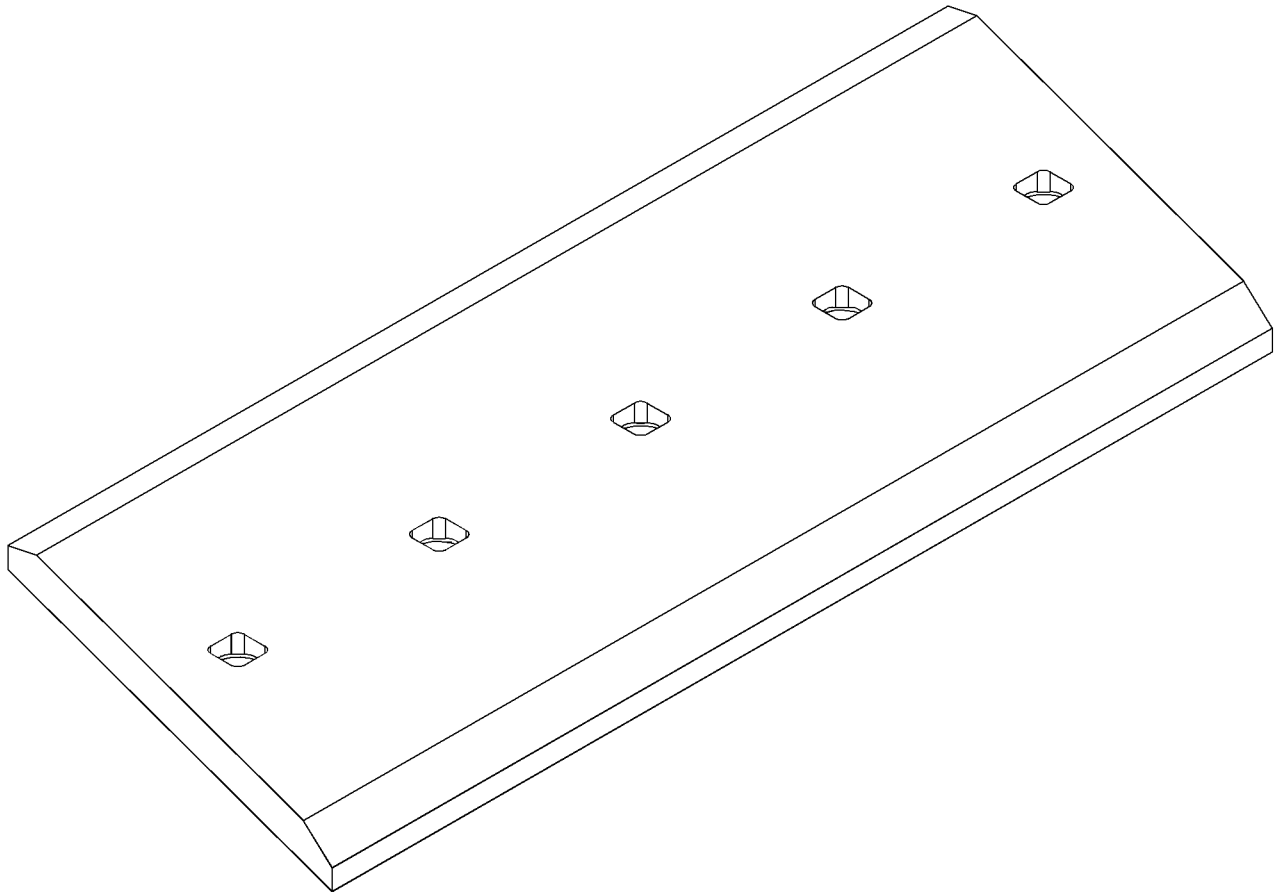

GRAPHIC #1 **<END>** g01347546

WORK TOOLS

280-4065 EDGE-CUTTING—LH

S/N: BXY1-UP

FIELD INSTALLATION

SMCS-6801 **i02681207**

NOTE	REF NO	GRAPHIC REF	PART NUMBER	QTY	PART NAME 1 2 3 4 5 6 (PRODUCT LEVEL)	SEE PAGE
					(NO SERVICED PARTS)	

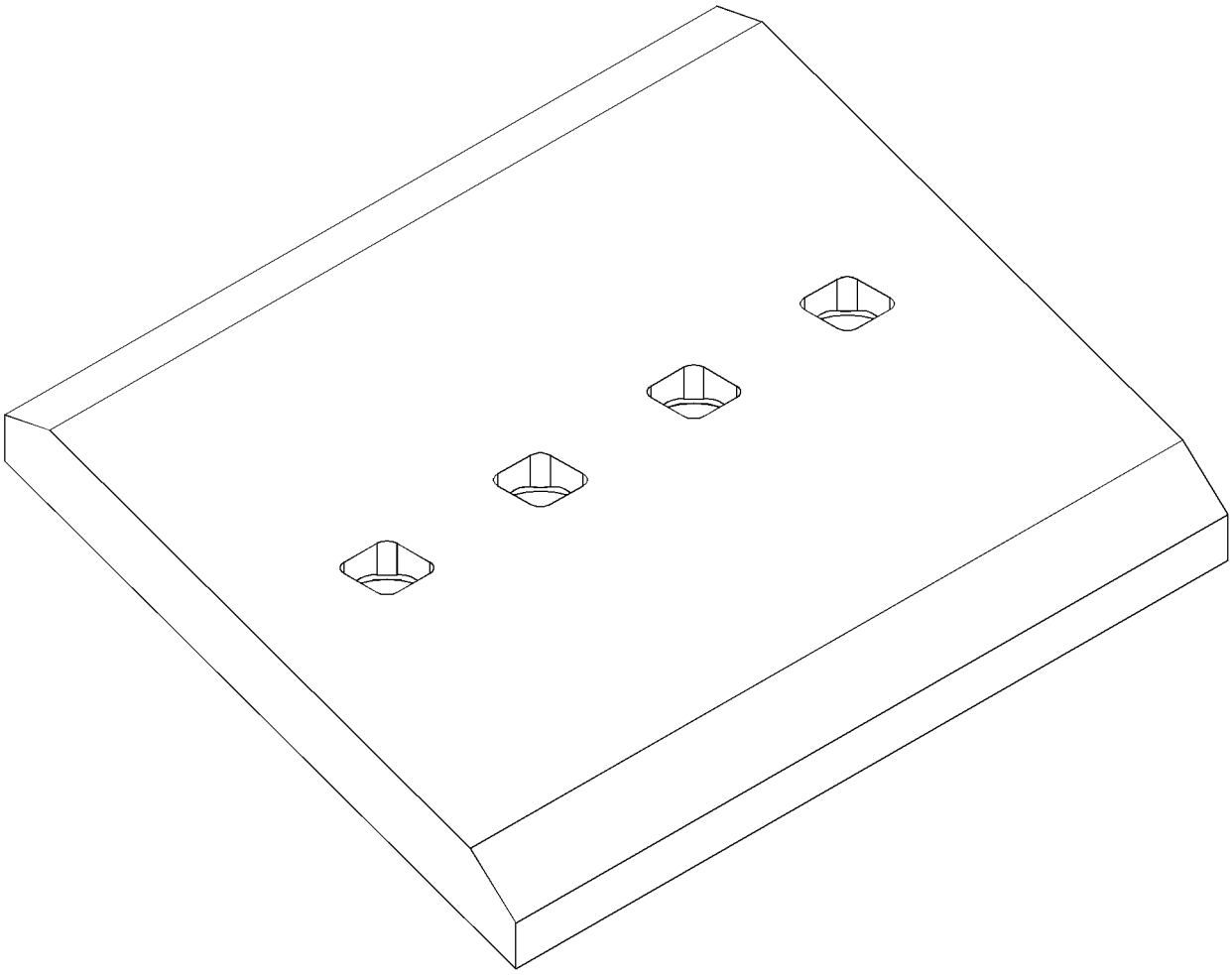

GRAPHIC #1 **<END>** g01347526

WORK TOOLS

280-4066 EDGE-CUTTING—RH

S/N: BXY1-UP
PART OF 310-9060 BUCKET GP-ROCK
FOR USE WITH 280-4060—PAGE 2017
AN ATTACHMENT AND FIELD INSTALLATION

SMCS-6801 **i02681203**

NOTE	REF NO	GRAPHIC REF	PART NUMBER	QTY	PART NAME 1 2 3 4 5 6 (PRODUCT LEVEL)	SEE PAGE
					(NO SERVICED PARTS)	

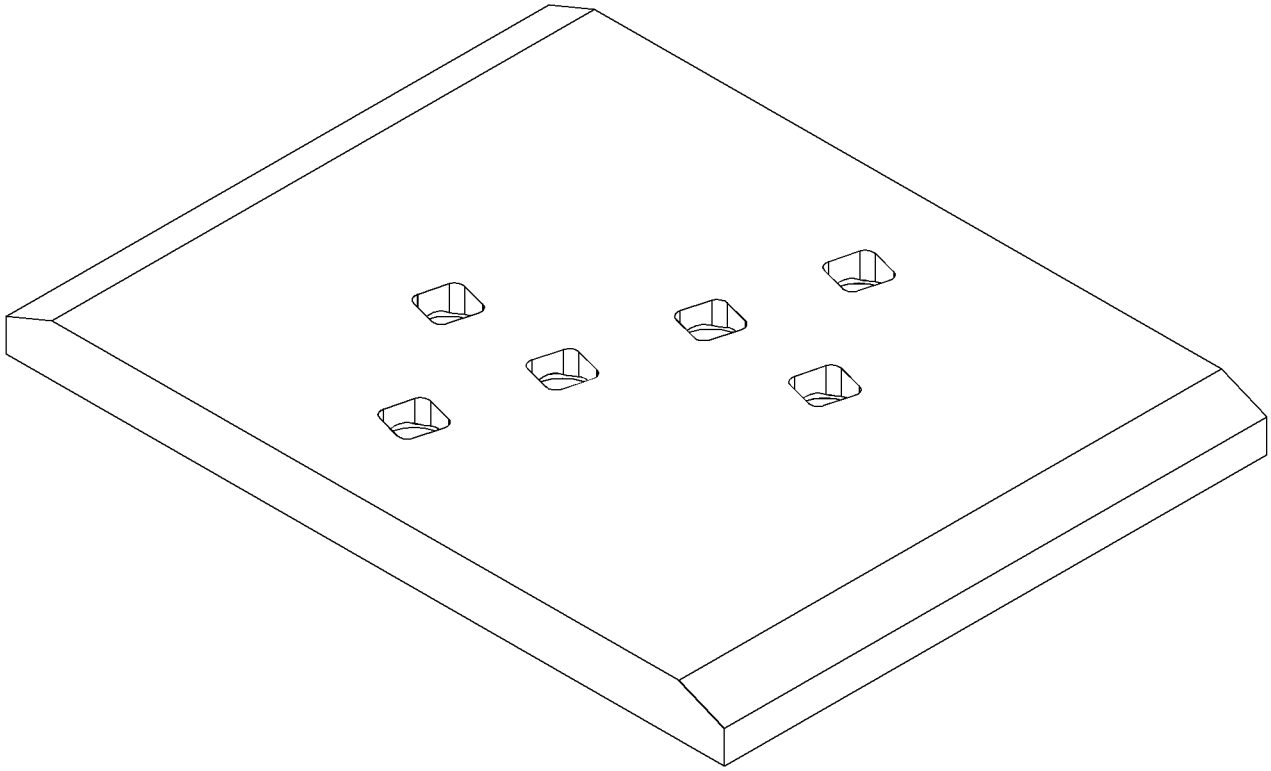

GRAPHIC #1 **<END>** g01347552

WORK TOOLS

280-4067 EDGE-CUTTING—LH

S/N: BXY1-UP
PART OF 310-9060 BUCKET GP-ROCK
FOR USE WITH 280-4060—PAGE 2017
AN ATTACHMENT AND FIELD INSTALLATION

SMCS-6801 **i02681205**

NOTE	REF NO	GRAPHIC REF	PART NUMBER	QTY	PART NAME 1 2 3 4 5 6 (PRODUCT LEVEL)	SEE PAGE
					(NO SERVICED PARTS)	

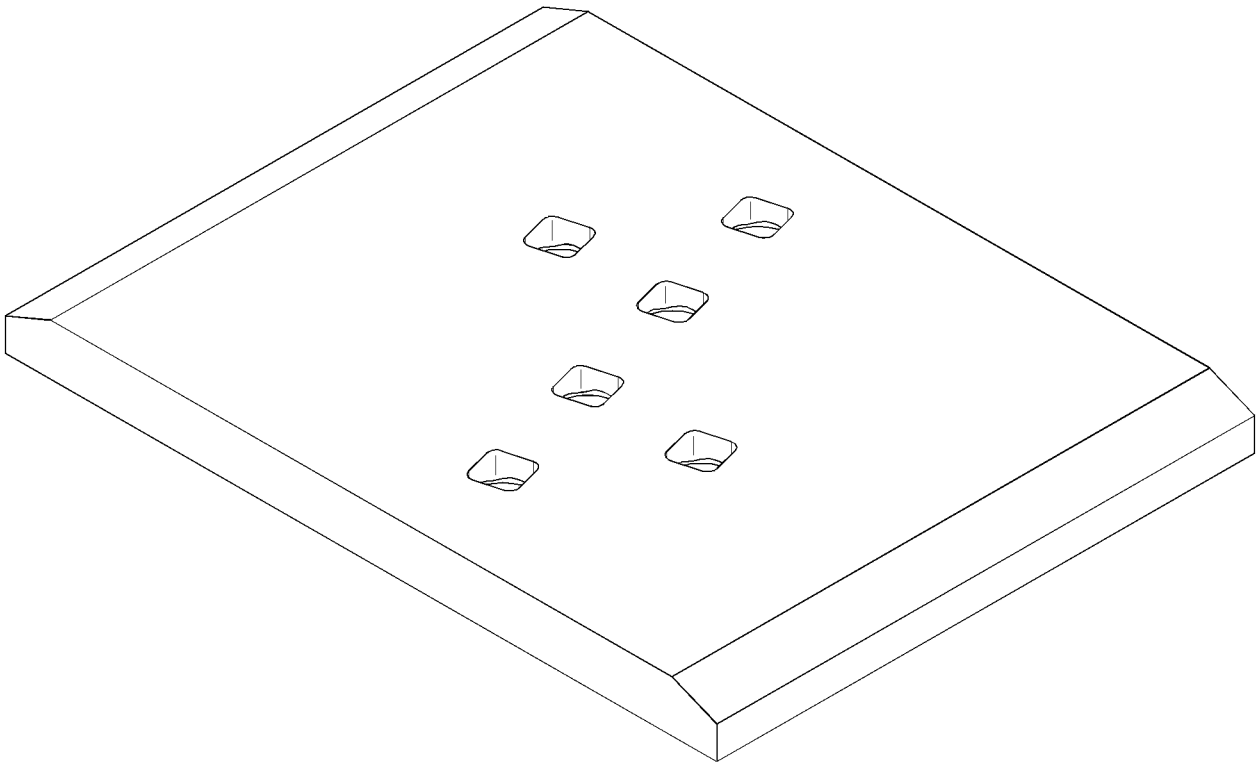

GRAPHIC #1 **<END>** g01347557

WORK TOOLS

280-4069 EDGE-CUTTING—END SECTION

S/N: BXY1-UP
45-MM THK
FIELD INSTALLATION

SMCS-6801 **i02485100**

NOTE	REF NO	GRAPHIC REF	PART NUMBER	QTY	PART NAME 1 2 3 4 5 6 (PRODUCT LEVEL)	SEE PAGE
					(NO SERVICED PARTS)	

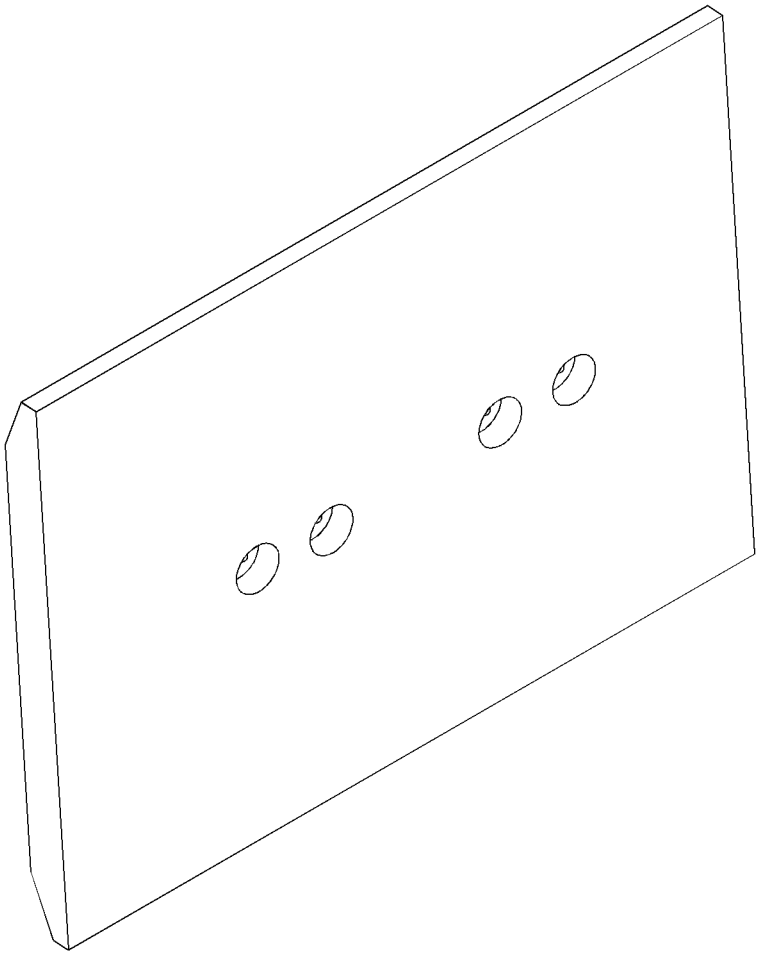

GRAPHIC #1 **<END>** g01248056

WORK TOOLS

281-0680 EDGE-CUTTING

S/N: BXY1-UP

FIELD INSTALLATION

SMCS-6801 **i02680654**

NOTE	REF NO	GRAPHIC REF	PART NUMBER	QTY	PART NAME 1 2 3 4 5 6 (PRODUCT LEVEL)	SEE PAGE
					(NO SERVICED PARTS)	

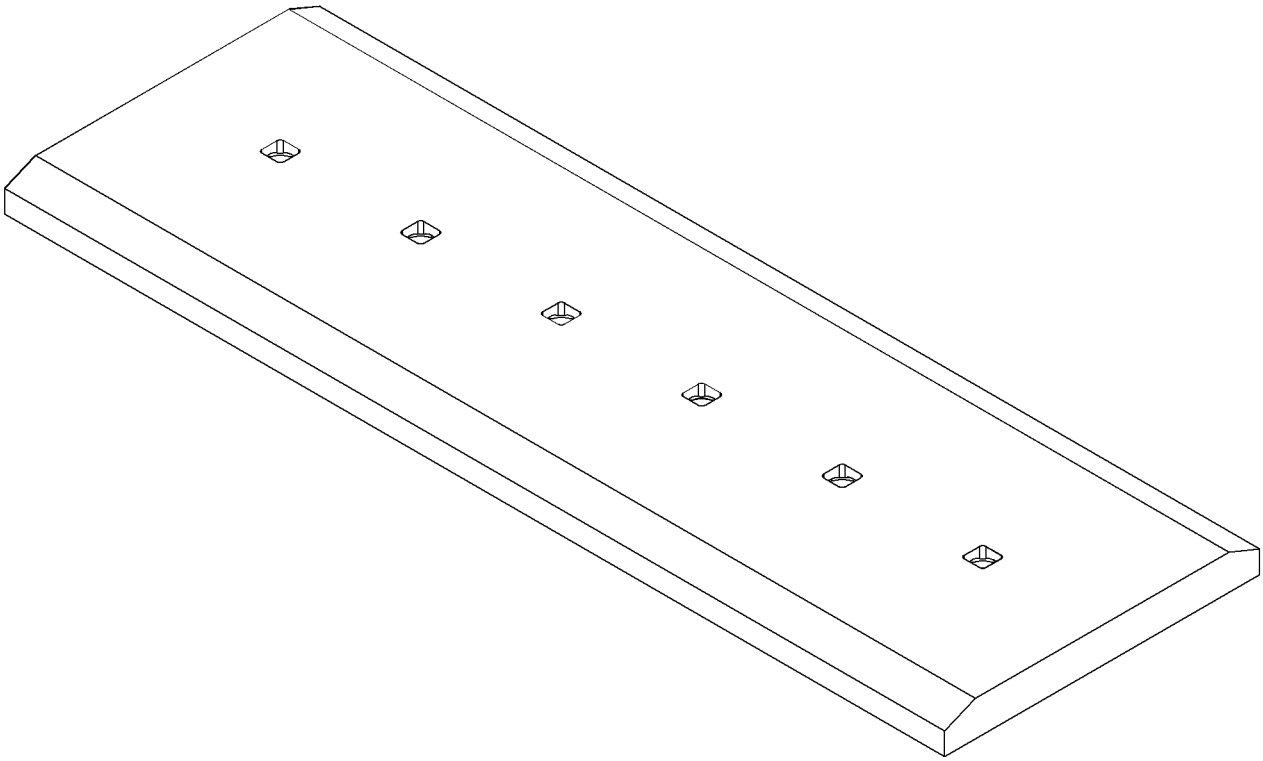

GRAPHIC #1 **<END>** g01347704

WORK TOOLS

314-5059 EDGE-CUTTING—CENTER

S/N: BXY1-UP

FIELD INSTALLATION

SMCS-6801 **i02866455**

NOTE	REF NO	GRAPHIC REF	PART NUMBER	QTY	PART NAME 1 2 3 4 5 6 (PRODUCT LEVEL)	SEE PAGE
					(NO SERVICED PARTS)	

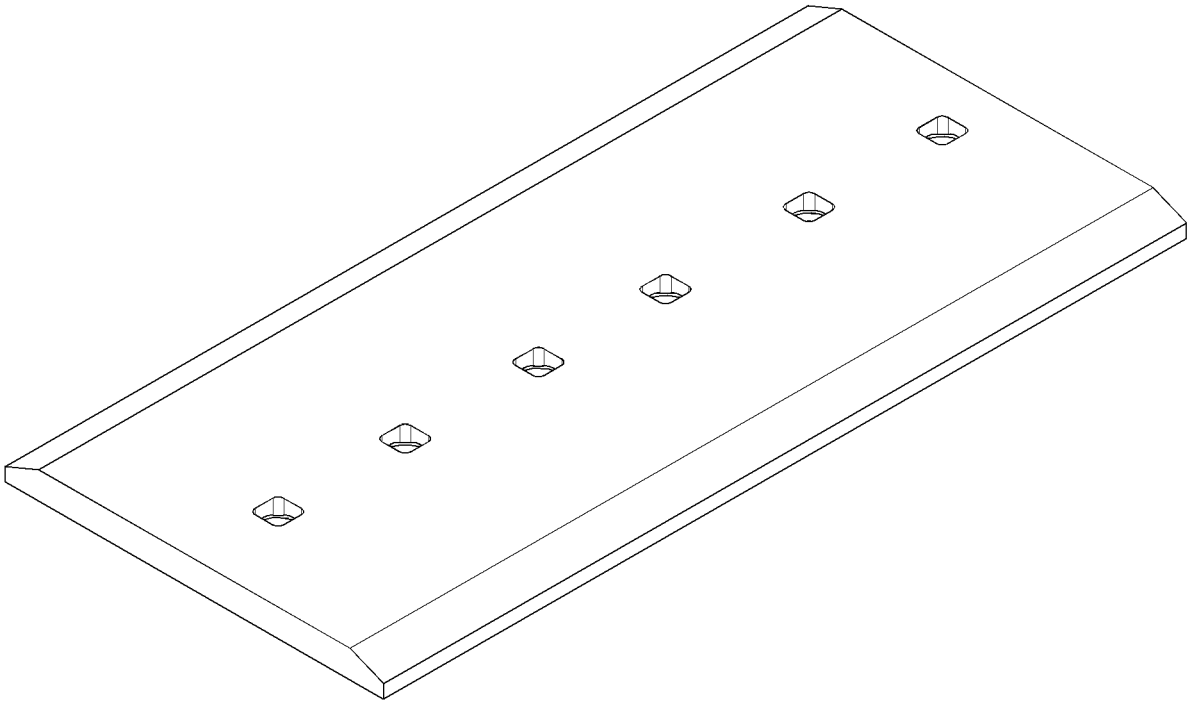

GRAPHIC #1 **<END>** g01431888

WORK TOOLS

257-1817 EDGE-SEGMENT

S/N: BXY1-UP

FIELD INSTALLATION

SMCS-6818 **i02458968**

NOTE	REF NO	GRAPHIC REF	PART NUMBER	QTY	PART NAME 1 2 3 4 5 6 (PRODUCT LEVEL)	SEE PAGE
					(NO SERVICED PARTS)	

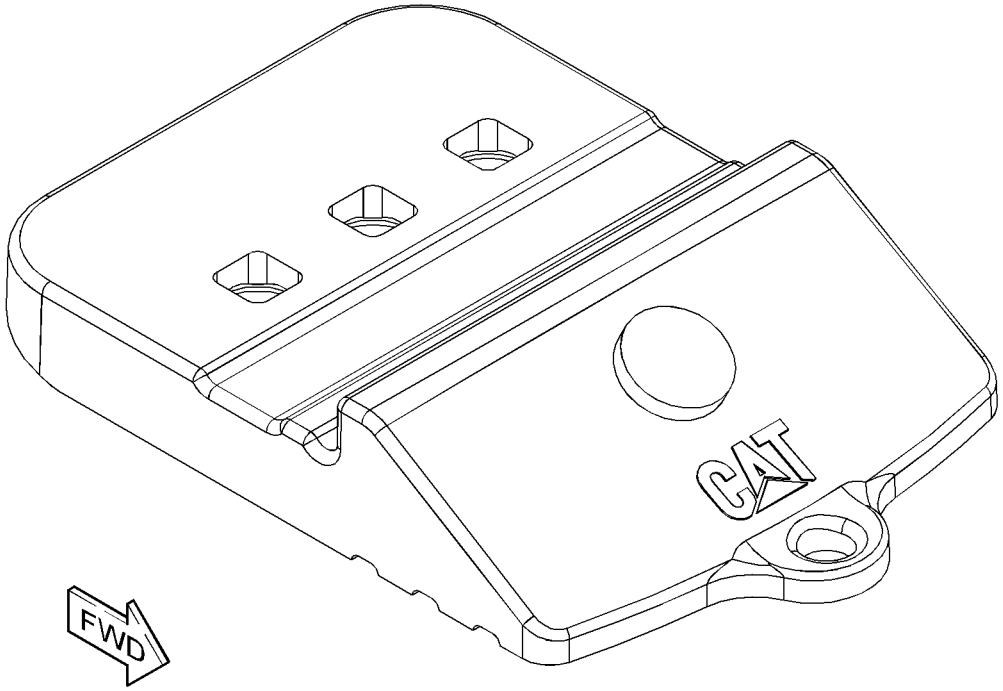

GRAPHIC #1 **<END>** g01228904

WORK TOOLS

257-1818 EDGE-SEGMENT—RH

S/N: 6AT1-UP

FIELD INSTALLATION

SMCS-6818 **i02458967**

NOTE	REF NO	GRAPHIC REF	PART NUMBER	QTY	PART NAME 1 2 3 4 5 6 (PRODUCT LEVEL)	SEE PAGE
					(NO SERVICED PARTS)	

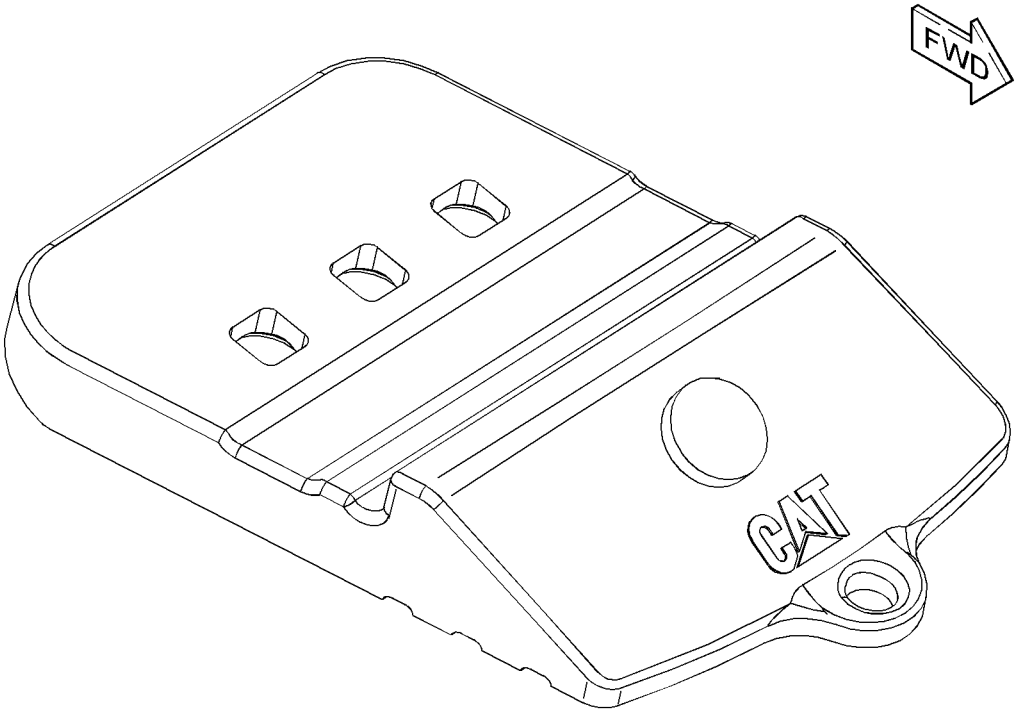

GRAPHIC #1 **<END>** g01229732

WORK TOOLS

257-1819 EDGE-SEGMENT–LH

S/N: 6AT1-UP

FIELD INSTALLATION

SMCS-6818 **i02458964**

NOTE	REF NO	GRAPHIC REF	PART NUMBER	QTY	PART NAME 1 2 3 4 5 6 (PRODUCT LEVEL)	SEE PAGE
					(NO SERVICED PARTS)	

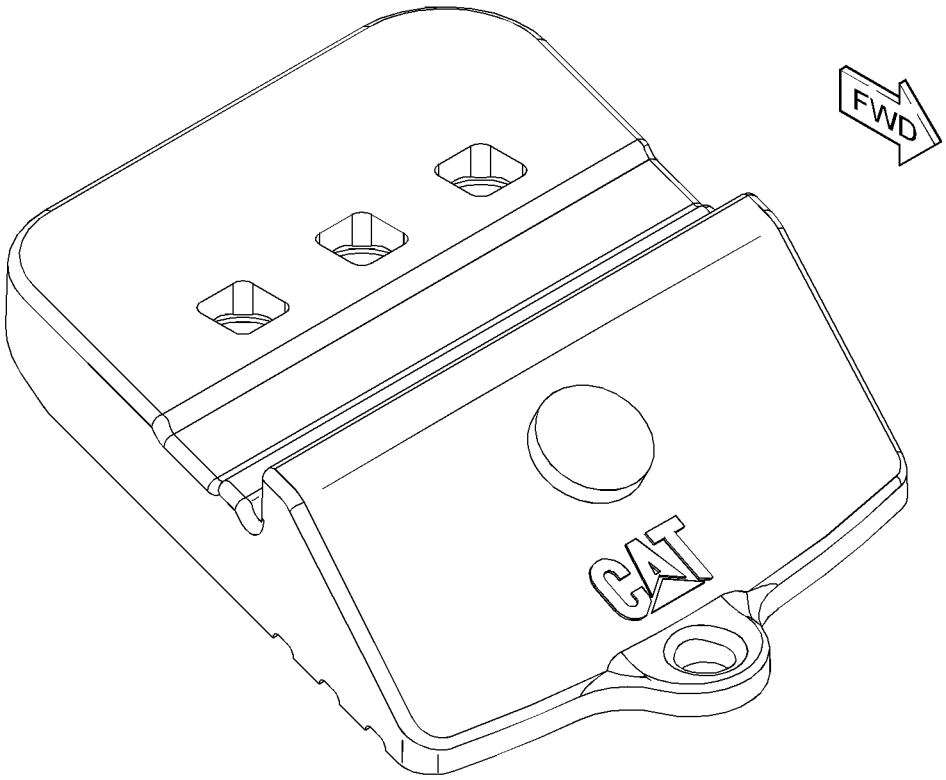

GRAPHIC #1 **<END>** g01229742

WORK TOOLS

257-1821 EDGE-SEGMENT–CENTER

S/N: BXY1-UP

FIELD INSTALLATION

SMCS-6818 **i02458961**

NOTE	REF NO	GRAPHIC REF	PART NUMBER	QTY	PART NAME 1 2 3 4 5 6 (PRODUCT LEVEL)	SEE PAGE
					(NO SERVICED PARTS)	

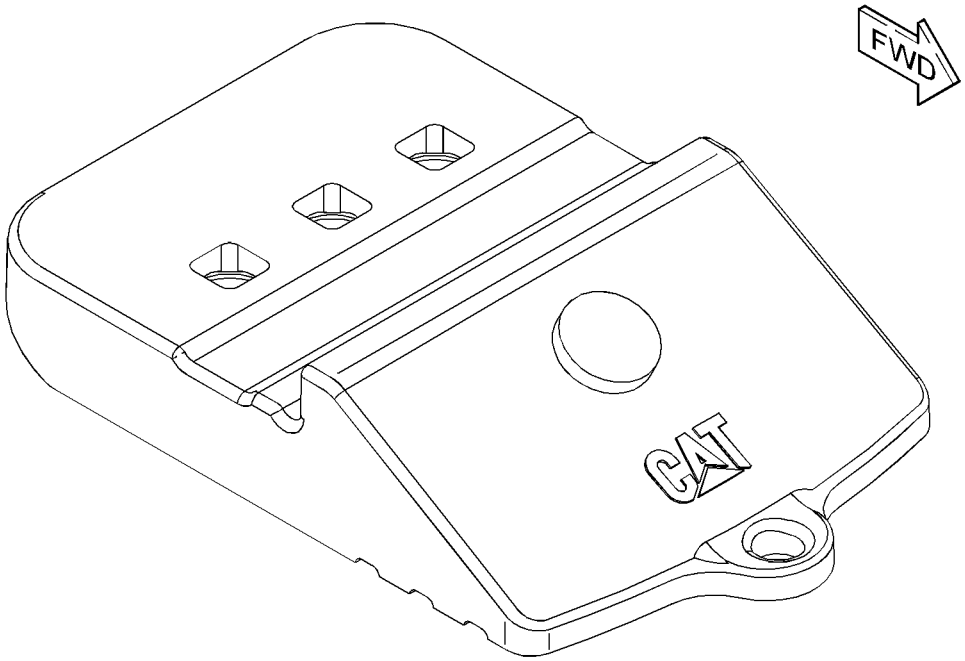

GRAPHIC #1 **<END>** g01229722

WORK TOOLS

257-1822 EDGE-SEGMENT–RH

S/N: 6AT1-UP

FIELD INSTALLATION

SMCS-6818 **i02458960**

NOTE	REF NO	GRAPHIC REF	PART NUMBER	QTY	PART NAME 1 2 3 4 5 6 (PRODUCT LEVEL)	SEE PAGE
					(NO SERVICED PARTS)	

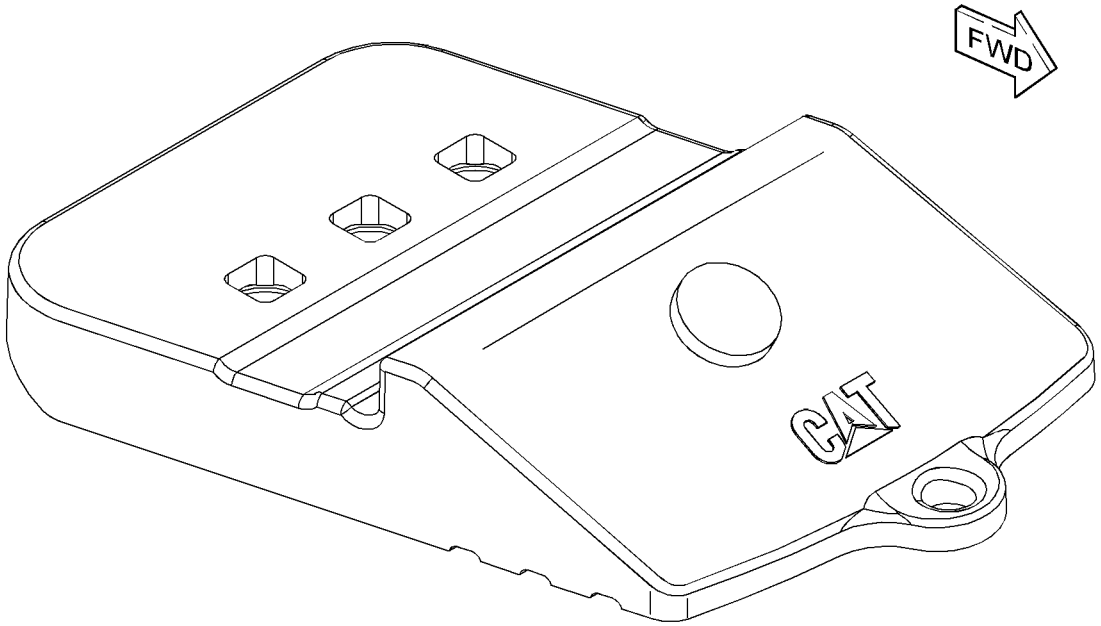

GRAPHIC #1 **<END>** g01229756

WORK TOOLS

257-1823 EDGE-SEGMENT—LH

S/N: 6AT1-UP

FIELD INSTALLATION

SMCS-6818 **i02458958**

NOTE	REF NO	GRAPHIC REF	PART NUMBER	QTY	PART NAME 1 2 3 4 5 6 (PRODUCT LEVEL)	SEE PAGE
					(NO SERVICED PARTS)	

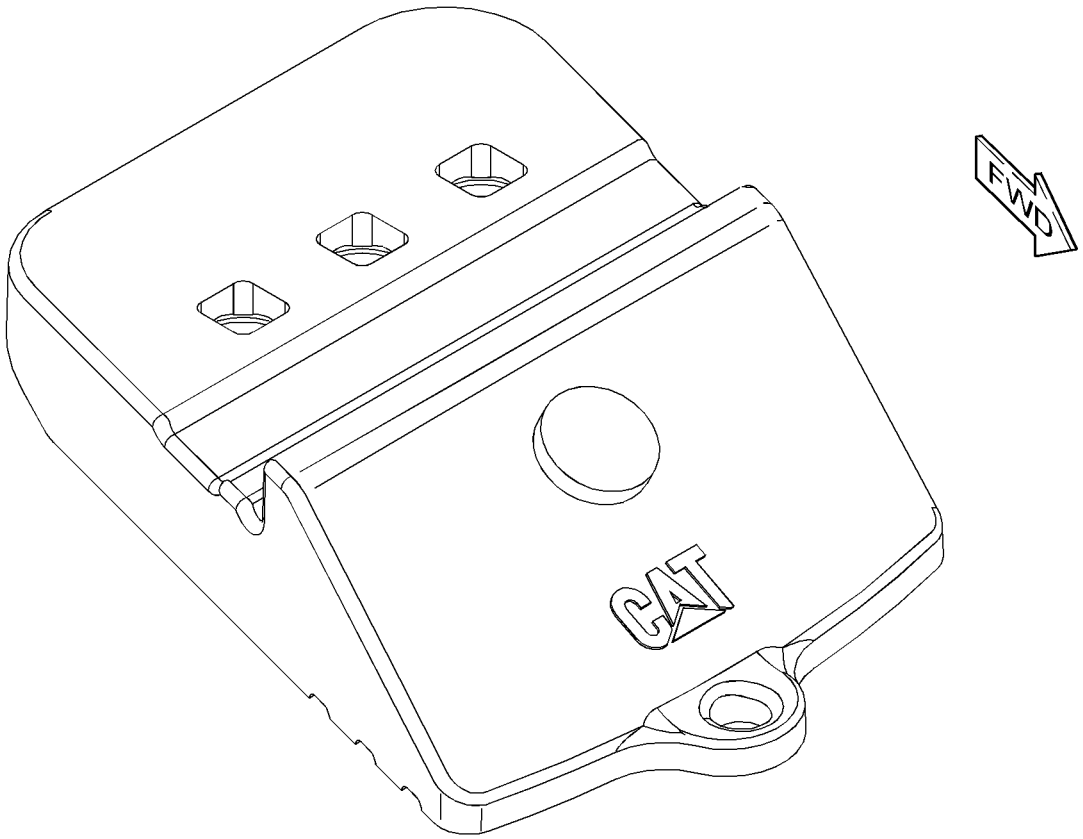

GRAPHIC #1 **<END>** g01229771

WORK TOOLS

275-5936 EDGE-SEGMENT–RH

S/N: BXY1-UP

FIELD INSTALLATION

SMCS-6818 **i02681210**

NOTE	REF NO	GRAPHIC REF	PART NUMBER	QTY	PART NAME 1 2 3 4 5 6 (PRODUCT LEVEL)	SEE PAGE
					(NO SERVICED PARTS)	

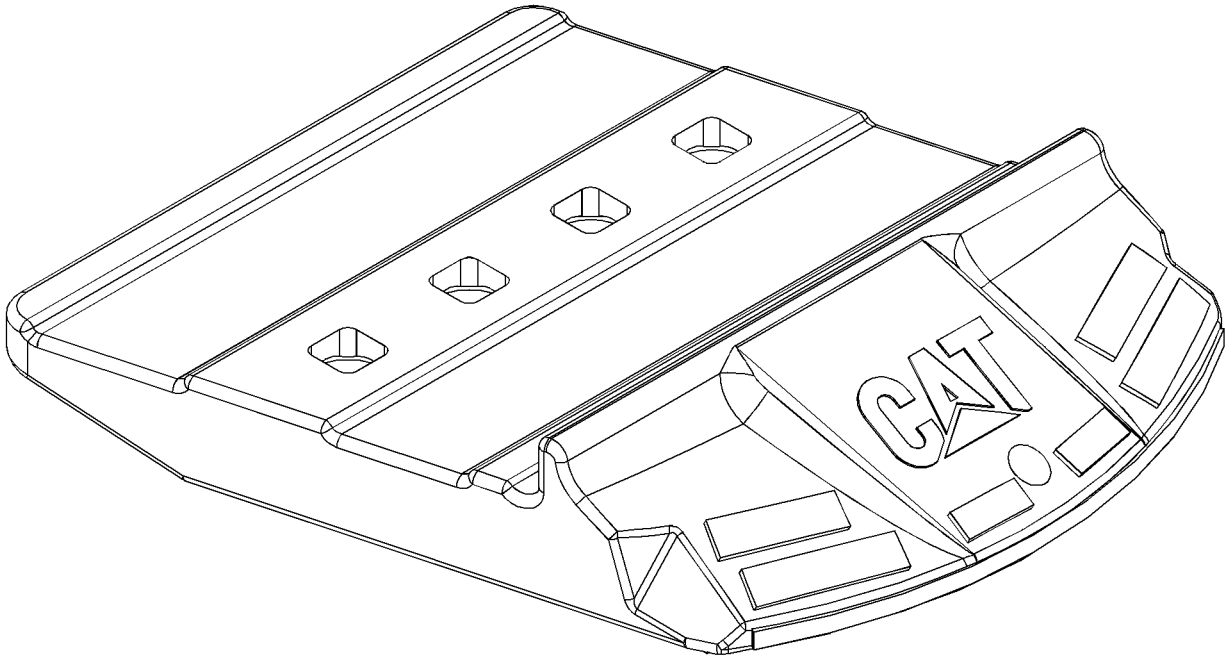

GRAPHIC #1 **<END>** g01347319

WORK TOOLS

275-5937 EDGE-SEGMENT—LH

S/N: BXY1-UP

FIELD INSTALLATION

SMCS-6818 **i02681212**

NOTE	REF NO	GRAPHIC REF	PART NUMBER	QTY	PART NAME 1 2 3 4 5 6 (PRODUCT LEVEL)	SEE PAGE
					(NO SERVICED PARTS)	

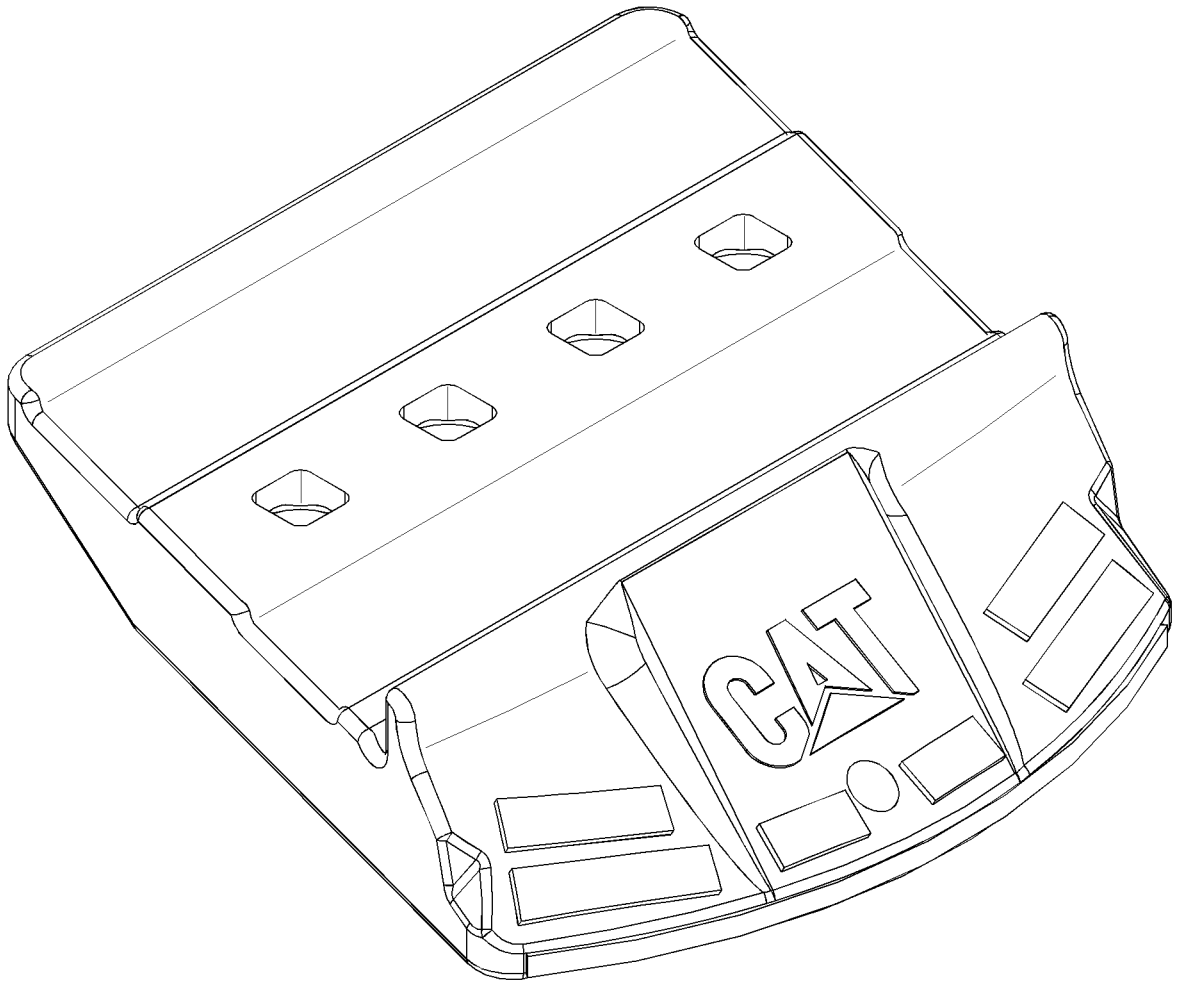

GRAPHIC #1 **<END>** g01347320

WORK TOOLS

275-5938 EDGE-SEGMENT—ABRASIVE RESISTANT MATERIAL, RH

S/N: BXY1-UP

FIELD INSTALLATION

SMCS-6818 **i02946682**

NOTE	REF NO	GRAPHIC REF	PART NUMBER	QTY	PART NAME 1 2 3 4 5 6 (PRODUCT LEVEL)	SEE PAGE
					(NO SERVICED PARTS)	

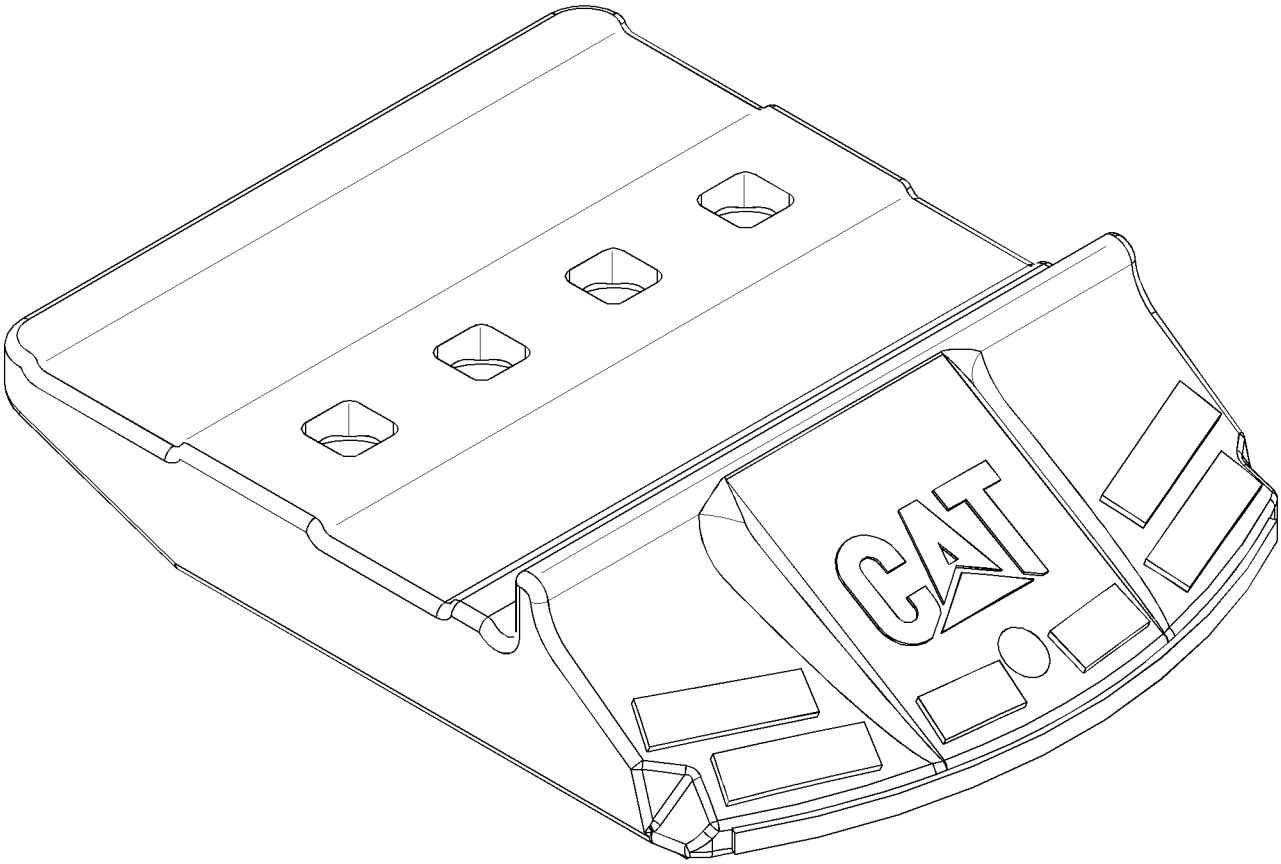

GRAPHIC #1 **<END>** g01347321

WORK TOOLS

190-0949 FRAME GP-QUICK COUPLER

S/N: BXY1-UP
PART OF 190-0948 COUPLER GP-QUICK
AN ATTACHMENT

SMCS-6129 **i03776180**

NOTE	REF NO	GRAPHIC REF	PART NUMBER	QTY	PART NAME 1 2 3 4 5 6 (PRODUCT LEVEL)	SEE PAGE
	1	1	**195-0343**	4	WEDGE AS	
	2	1	*195-0342*	1	FRAME AS	
	2A	1	**195-0623**	2	PLATE	
	2B	1	**195-0624**	2	PLATE	

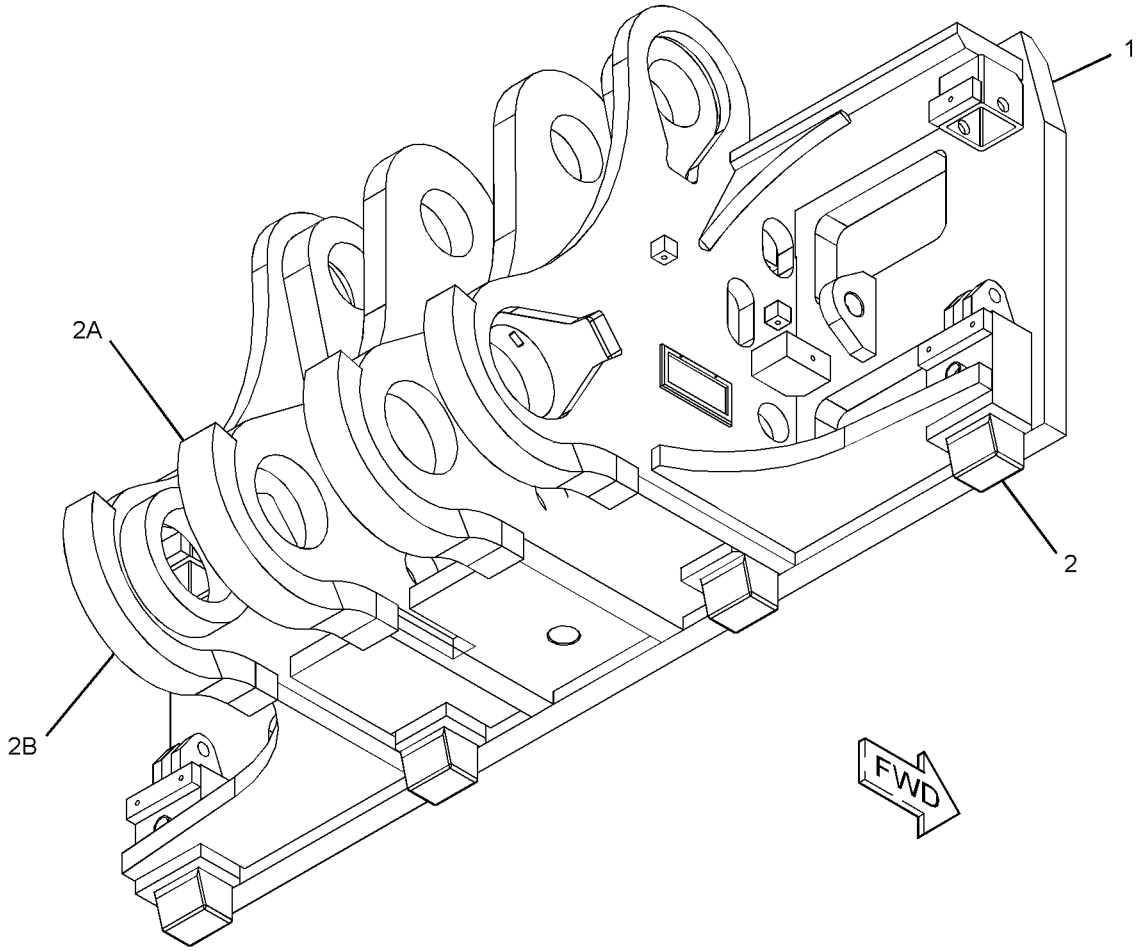

GRAPHIC #1 **<END>** g01173355

WORK TOOLS

174-7950 GUARD GP-BUCKET CORNER

S/N: BXY1-UP
FOR USE WITH A 44.5 MM THICK EDGE AND CORNERS (TWO BOLT) 6I8249 (RH) & 6I8250 (LH)
AN ATTACHMENT

SMCS-6816 **i02675672**

NOTE	REF NO	GRAPHIC REF	PART NUMBER	QTY	PART NAME 1 2 3 4 5 6 (PRODUCT LEVEL)	SEE PAGE
	1	1	**3K-9770**	4	NUT-FULL (1-1/4-7-THD)	
	2	1	**253-0066**	1	GUARD-BUCKET CORNER (RH)	
	3	1	**253-0067**	1	GUARD-BUCKET CORNER (LH)	
	4	1	**5P-8823**	4	BOLT-PLOW (1-1/4-7X4.13-IN)	

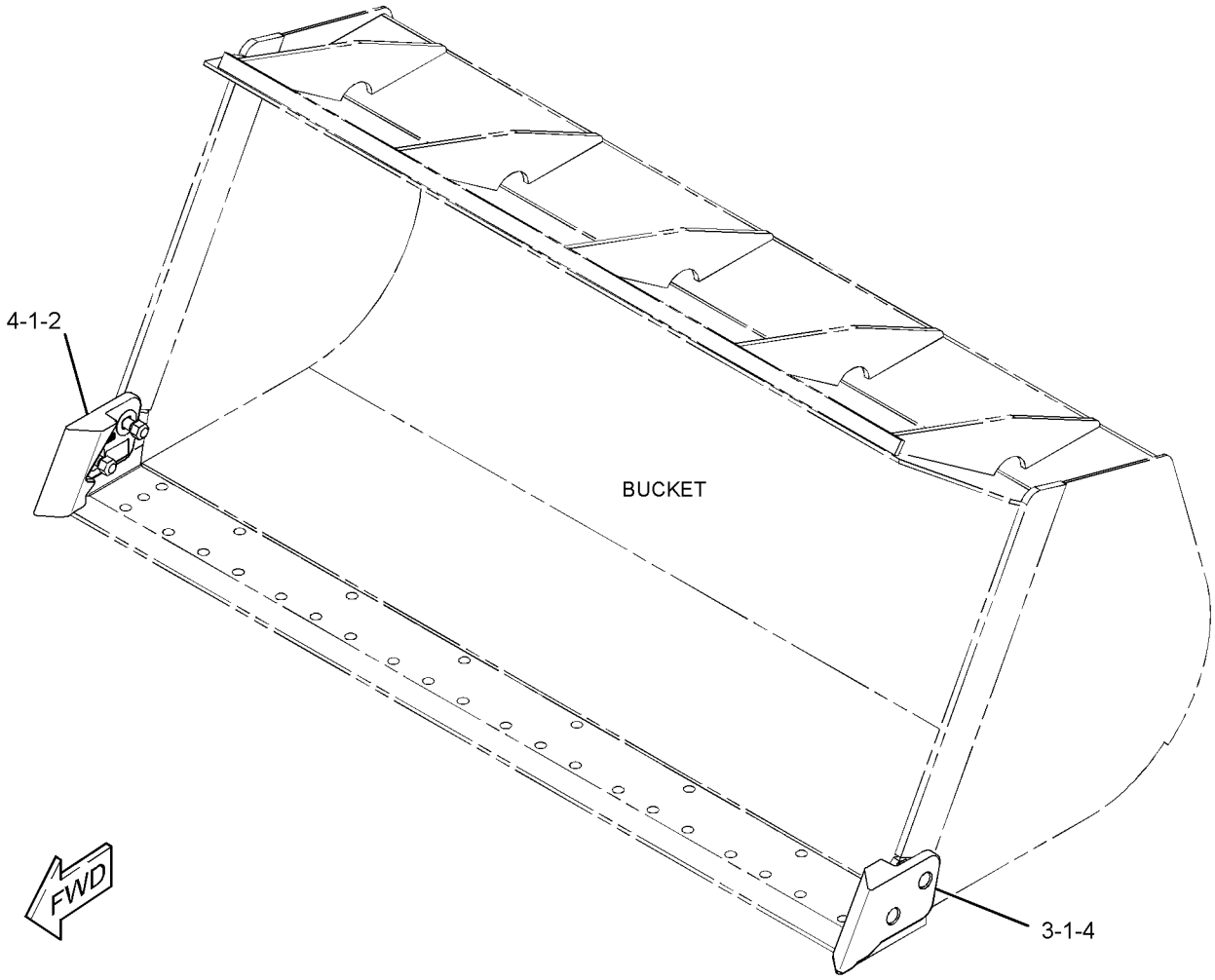

GRAPHIC #1 **<END>** g01348122

WORK TOOLS

336-2311 PLATE-WEAR–LH

S/N: BXY1-UP

FIELD INSTALLATION

SMCS-6120, 6820 **i03260303**

NOTE	REF NO	GRAPHIC REF	PART NUMBER	QTY	PART NAME 1 2 3 4 5 6 (PRODUCT LEVEL)	SEE PAGE
					(NO SERVICED PARTS)	

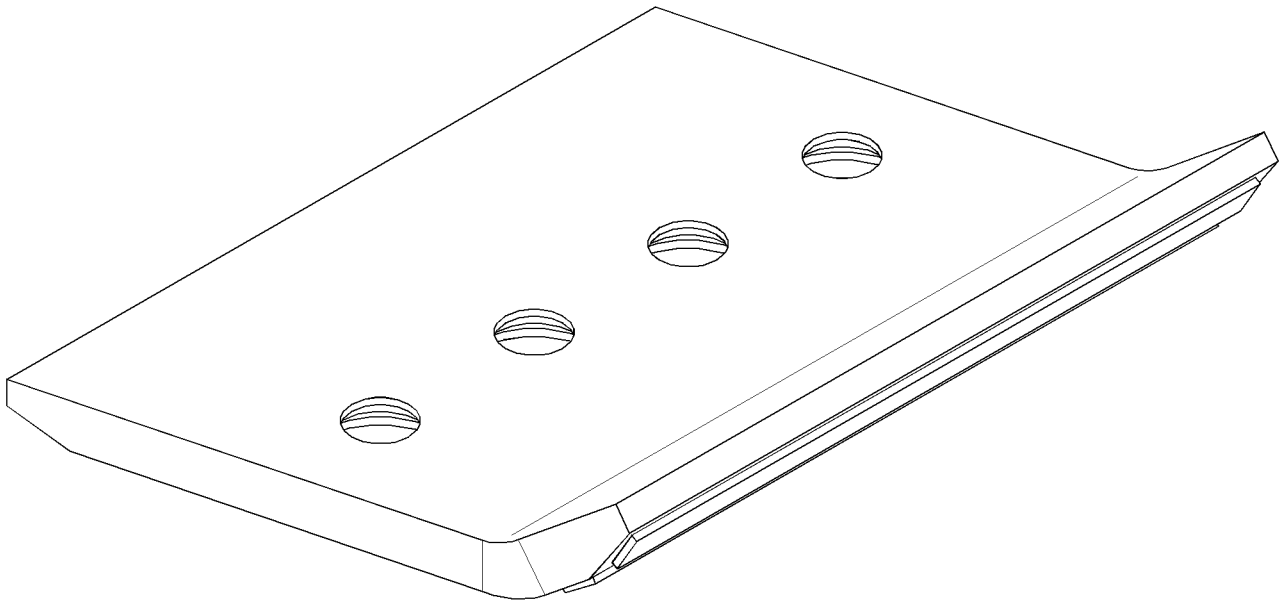

GRAPHIC #1 **<END>** g01940397

WORK TOOLS

232-0161 PROTECTOR GP-EDGE

S/N: BXY1-UP

FIELD INSTALLATION

SMCS-6120 **i02224403**

NOTE	PART NUMBER	QTY	PART NAME 1 2 3 4 5 6 (PRODUCT LEVEL)	SEE PAGE
	5P-8361	21	BOLT-PLOW (1-1/4-7X4.92-IN)	
	109-9080	1	EDGE-SEGMENT (CENTER)	
	109-9081	3	EDGE-SEGMENT (LH)	
	109-9082	3	EDGE-SEGMENT (RH)	
	5P-8362	21	NUT (1-1/4-7-THD)	
	3K-9770	21	NUT-FULL (1-1/4-7-THD)	
	195-7180	1	PLATE (CENTER)	
	195-7181	3	PLATE-WEAR (RH)	
	195-7182	3	PLATE-WEAR (LH)	

<END>

WORK TOOLS

275-5490 PROTECTOR GP-EDGE

S/N: BXY1-UP

AN ATTACHMENT

SMCS-6120 **i03793837**

NOTE	REF NO	GRAPHIC REF	PART NUMBER	QTY	PART NAME 1 2 3 4 5 6 (PRODUCT LEVEL)	SEE PAGE
	1	1	**5P-8362**	21	NUT (1-1/4-7-THD)	
	2	1	**109-9080**	7	EDGE-SEGMENT (CENTER)	
	3	1	**195-7180**	7	PLATE (CENTER)	
	4	1	**3K-9770**	21	NUT-FULL (1-1/4-7-THD)	
	5	1	**5P-8361**	21	BOLT-PLOW (1-1/4-7X4.92-IN)	

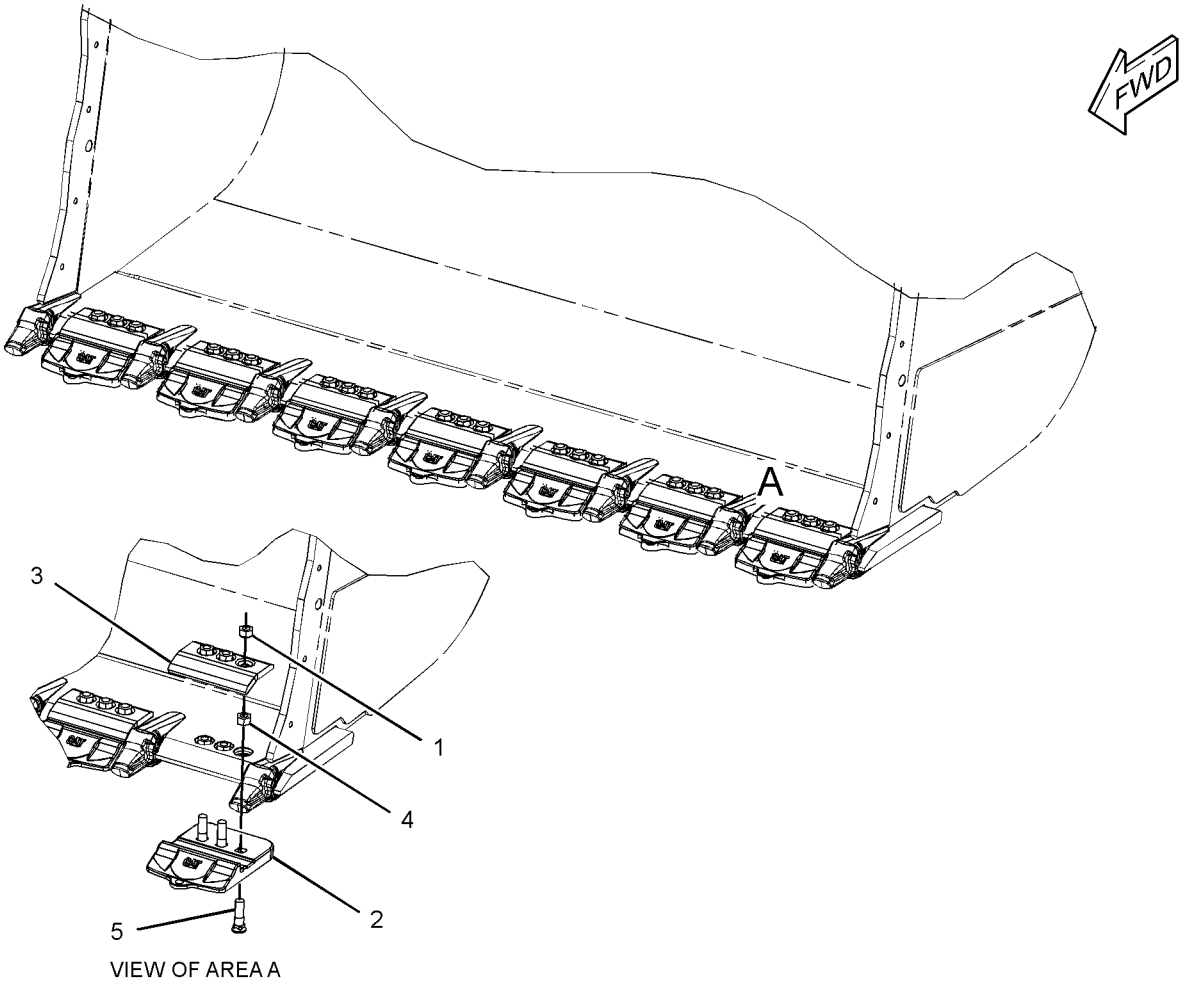

GRAPHIC #1 **<END>** g02054356

WORK TOOLS

106-0912 PROTECTOR GP-SIDE BAR

S/N: BXY1-UP

PART OF 246-2769, 246-2771, 283-1850, 283-1940, 288-8250 BUCKET GP-ROCK

AN ATTACHMENT

SMCS-6102, 6817 **i01400974**

NOTE	REF NO	GRAPHIC REF	PART NUMBER	QTY	PART NAME 1 2 3 4 5 6 (PRODUCT LEVEL)	SEE PAGE
	1	1	**9J-9600**	2	BIT-ROUTER	
	2	1	**135-9350**	4	PIN	
	3	1	**114-0359**	4	RETAINER AS	

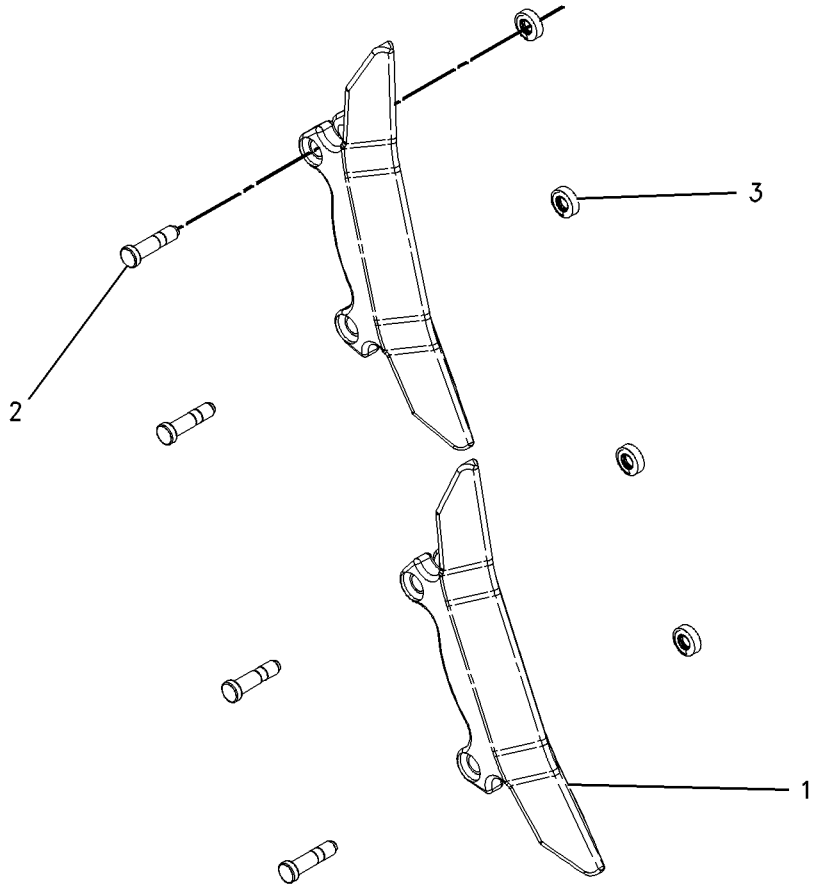

GRAPHIC #1 **<END>** g00738979

WORK TOOLS

8E-3758 TIP GP-ABRASION

S/N: BXY1-UP
J-460. HEAVY-DUTY
AN ATTACHMENT

SMCS-6805 **i02110591**

NOTE	REF NO	GRAPHIC REF	PART NUMBER	QTY	PART NAME 1 2 3 4 5 6 (PRODUCT LEVEL)	SEE PAGE
	1	1	**114-0468**	1	PIN	
	2	1	**107-3469**	1	RETAINER AS	
	3	1	**9N-4453**	1	TIP-ABRASION (HEAVY-DUTY)	

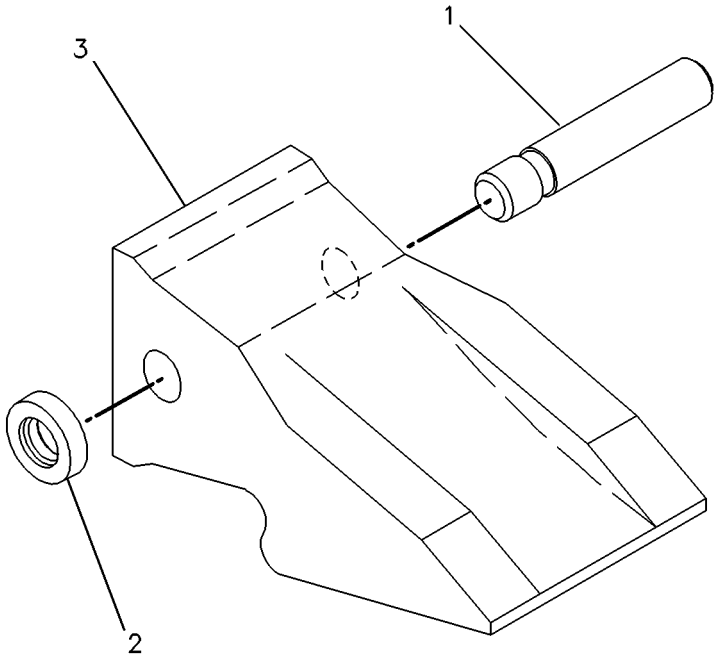

GRAPHIC #1 **<END>** g00224048

WORK TOOLS

8E-3759 TIP GP-ABRASION

S/N: BXY1-UP
J-550. HEAVY-DUTY
AN ATTACHMENT

SMCS-6805 **i02110550**

NOTE	REF NO	GRAPHIC REF	PART NUMBER	QTY	PART NAME 1 2 3 4 5 6 (PRODUCT LEVEL)	SEE PAGE
	1	1	**6Y-2553**	1	TIP-ABRASION (HEAVY-DUTY)	
	2	1	**107-3378**	1	PIN	
	3	1	**107-8559**	1	RETAINER AS	

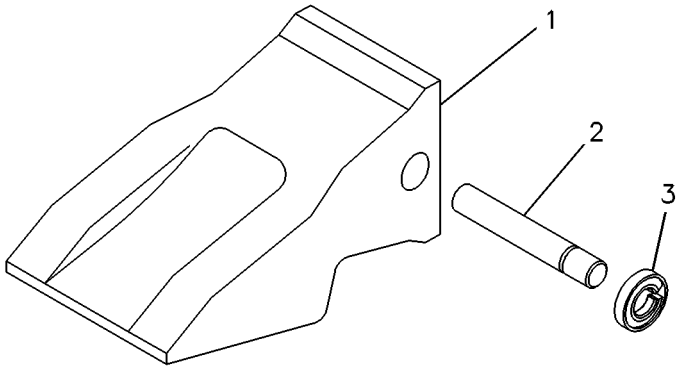

GRAPHIC #1 **<END>** g00127389

WORK TOOLS

220-9169 TIP GP-ABRASION

S/N: BXY1-UP
K-110
AN ATTACHMENT

SMCS-6805 **i02223787**

NOTE	PART NUMBER	QTY	PART NAME 1 2 3 4 5 6 (PRODUCT LEVEL)	SEE PAGE
	220-9110	1	RETAINER-G.E.T. (K-110)	
	223-8112	1	TIP-ABRASION (K-110)	

<END>

309-1066 TIP GP-ABRASION—HEAVY DUTY

S/N: BXY1-UP
K110
FIELD INSTALLATION

SMCS-6805 **i03661205**

NOTE	PART NUMBER	QTY	PART NAME 1 2 3 4 5 6 (PRODUCT LEVEL)	SEE PAGE
	309-1119	1	RETAINER	
	286-2119	1	TIP-HEAVY ABRASION (K-110)	

<END>

WORK TOOLS

309-1059 TIP GP-HEAVY ABRASION

S/N: BXY1-UP
K-130
AN ATTACHMENT

SMCS-6805 **i02818359**

NOTE	REF NO	GRAPHIC REF	PART NUMBER	QTY	PART NAME 1 2 3 4 5 6 (PRODUCT LEVEL)	SEE PAGE
	1	1	**223-8132**	1	TIP-ABRASION (K-130)	
	2	1	**232-2139**	1	RETAINER	

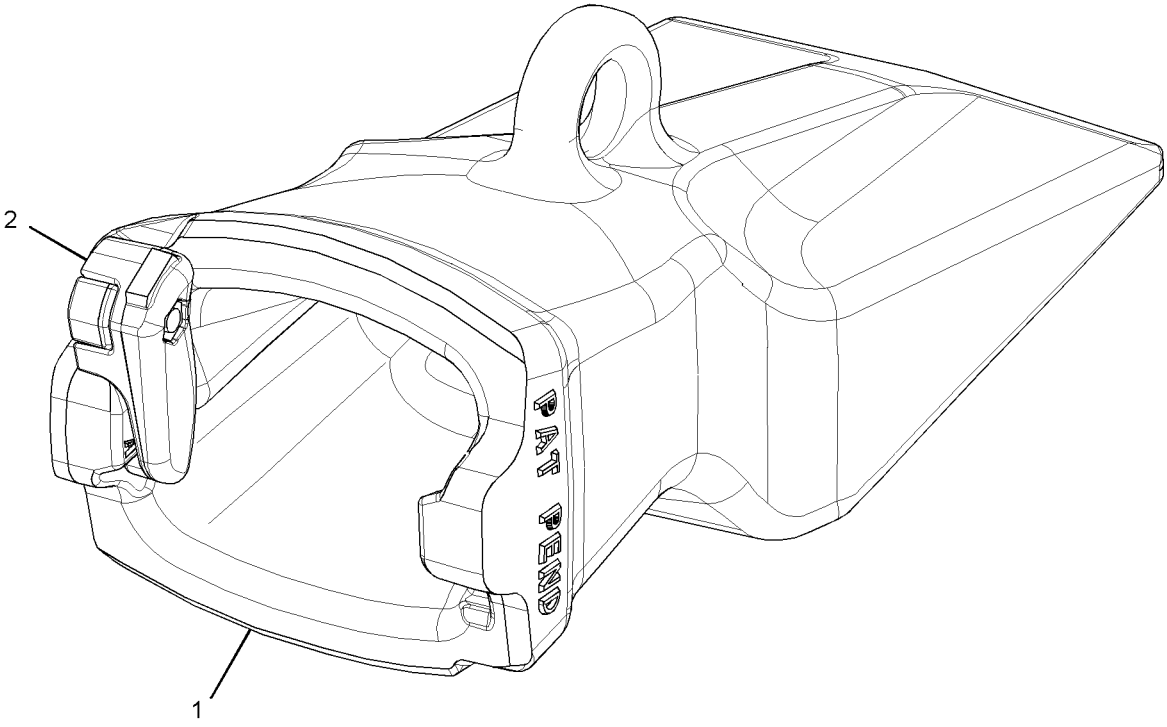

GRAPHIC #1 **<END>** g01409053

WORK TOOLS

309-1129 TIP GP-HEAVY ABRASION–K-110

S/N: BXY1-UP

AN ATTACHMENT

SMCS-6805 **i02947210**

NOTE	REF NO	GRAPHIC REF	PART NUMBER	QTY	PART NAME 1 2 3 4 5 6 (PRODUCT LEVEL)	SEE PAGE
	1	1	**286-2110**	1	RETAINER-G.E.T. (K-110)	
	2	1	**286-2119**	1	TIP-HEAVY ABRASION (K-110)	

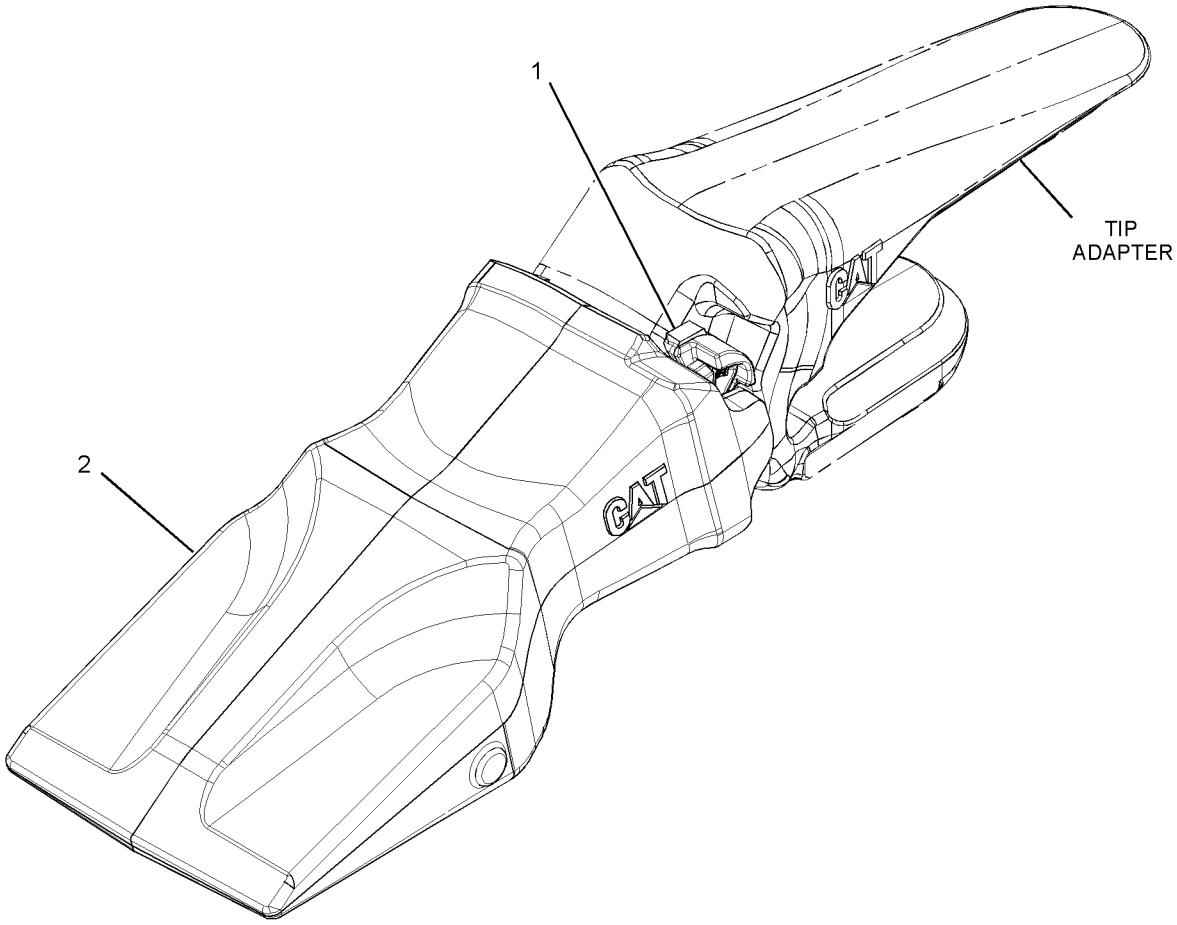

GRAPHIC #1 **<END>** g01511116

WORK TOOLS

6Y-5373 TIP GP-LONG

S/N: BXY1-UP
J-550. HEAVY-DUTY
AN ATTACHMENT

SMCS-6805 **i02110575**

NOTE	REF NO	GRAPHIC REF	PART NUMBER	QTY	PART NAME 1 2 3 4 5 6 (PRODUCT LEVEL)	SEE PAGE
	1	1	**107-8559**	1	RETAINER AS	
	2	1	**107-3378**	1	PIN	
	3	1	**9N-4552**	1	TIP-LONG (HEAVY-DUTY)	

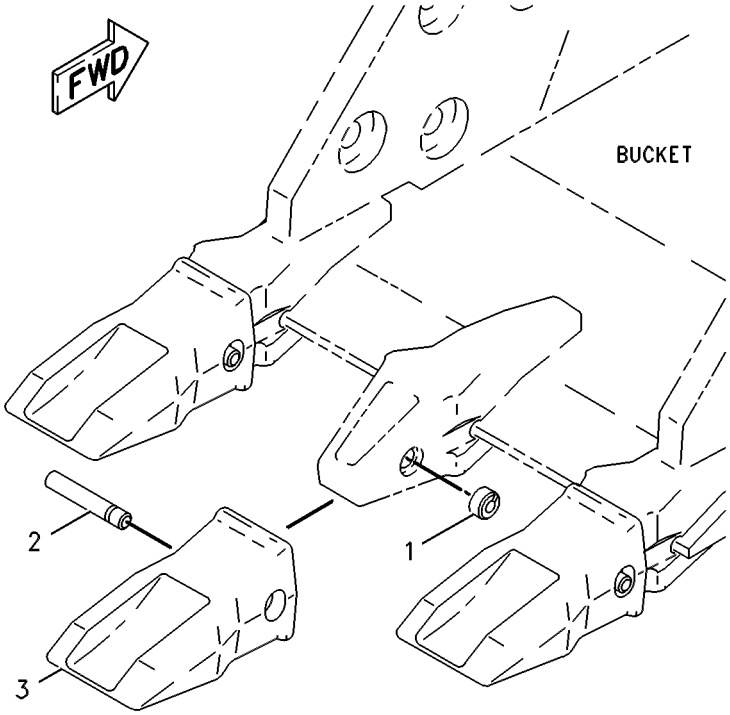

GRAPHIC #1 **<END>** g00121857

WORK TOOLS

8J-9842 TIP GP-LONG

S/N: BXY1-UP
J-550. HEAVY-DUTY
AN ATTACHMENT

SMCS-6805 **i02110579**

NOTE	REF NO	GRAPHIC REF	PART NUMBER	QTY	PART NAME 1 2 3 4 5 6 (PRODUCT LEVEL)	SEE PAGE
	1	1	**107-3378**	1	PIN	
	2	1	**107-8559**	1	RETAINER AS	
	3	1	**9W-8552**	1	TIP-LONG (HEAVY-DUTY)	

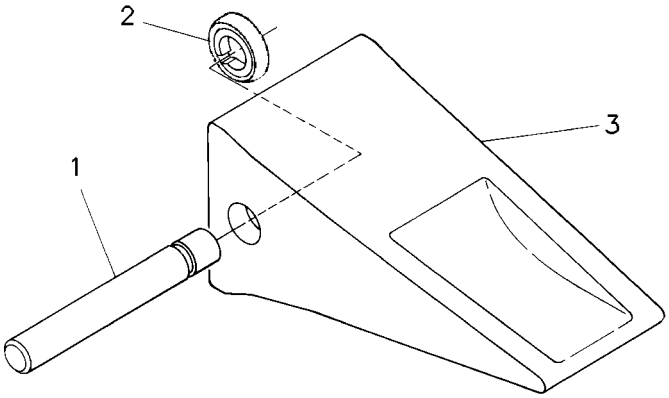

GRAPHIC #1 **<END>** g00119069

WORK TOOLS

9N-4562 TIP GP-LONG

S/N: BXY1-UP
J-460. HEAVY DUTY
AN ATTACHMENT

SMCS-6805 **i01480311**

NOTE	REF NO	GRAPHIC REF	PART NUMBER	QTY	PART NAME 1 2 3 4 5 6 (PRODUCT LEVEL)	SEE PAGE
	1	1	**107-3469**	1	RETAINER AS-G.E.T.	
	2	1	**9W-8452**	1	TIP-LONG (HD)	
	3	1	**114-0468**	1	PIN-G.E.T.	

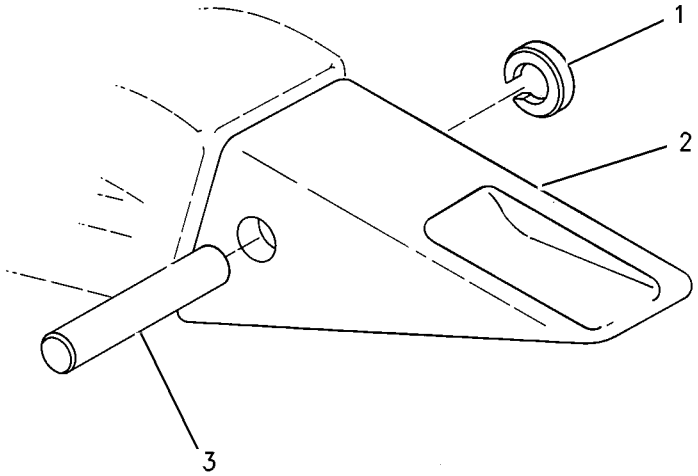

GRAPHIC #1 **<END>** g00770646

WORK TOOLS

9N-4563 TIP GP-LONG

S/N: BXY1-UP
J-460. ABRASIVE
AN ATTACHMENT

SMCS-6805 **i01382253**

NOTE	REF NO	GRAPHIC REF	PART NUMBER	QTY	PART NAME 1 2 3 4 5 6 (PRODUCT LEVEL)	SEE PAGE
	1	1	**107-3469**	1	RETAINER AS	
	2	1	**9N-4452**	1	TIP-LONG	
	3	1	**114-0468**	1	PIN	

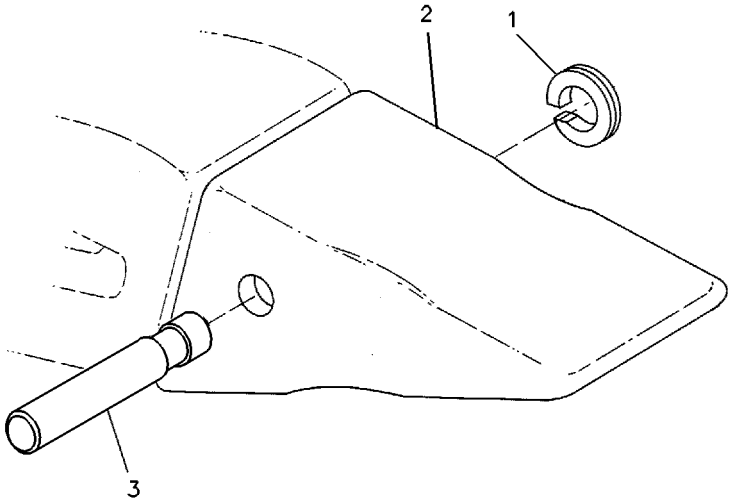

GRAPHIC #1 **<END>** g00119082

WORK TOOLS

9N-4564 TIP GP-PENETRATION

S/N: BXY1-UP
J-460
AN ATTACHMENT

SMCS-6805 **i01496659**

NOTE	REF NO	GRAPHIC REF	PART NUMBER	QTY	PART NAME 1 2 3 4 5 6 (PRODUCT LEVEL)	SEE PAGE
	1	1	**114-0468**	1	PIN-G.E.T.	
	2	1	**9W-8459**	1	TIP-PENETRATION	
	3	1	**107-3469**	1	RETAINER AS-G.E.T.	

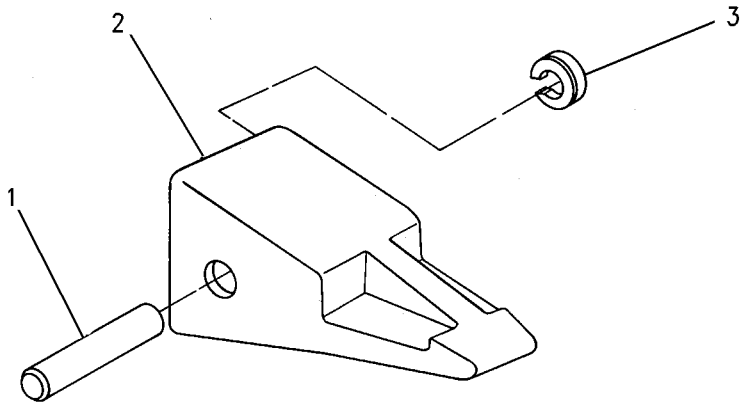

GRAPHIC #1 **<END>** g00770649

WORK TOOLS

170-7295 TIP GP-PENETRATION

S/N: BXY1-UP
J-460
AN ATTACHMENT

SMCS-6805 **i01493086**

NOTE	REF NO	GRAPHIC REF	PART NUMBER	QTY	PART NAME 1 2 3 4 5 6 (PRODUCT LEVEL)	SEE PAGE
	1	1	**114-0468**	1	PIN-G.E.T.	
	2	1	**138-6451**	1	TIP-PENETRATION	
	3	1	**107-3469**	1	RETAINER AS-G.E.T.	

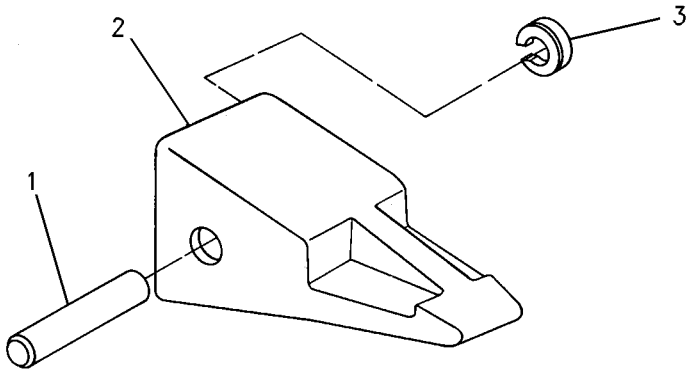

GRAPHIC #1 **<END>** g00775213

WORK TOOLS

170-7296 TIP GP-PENETRATION

S/N: BXY1-UP
J-550. HEAVY DUTY
AN ATTACHMENT

SMCS-6805 **i01094356**

NOTE	PART NUMBER	QTY	PART NAME 1 2 3 4 5 6 (PRODUCT LEVEL)	SEE PAGE
	107-3378	1	PIN-G.E.T.	
	107-8559	1	RETAINER AS-G.E.T.	
	138-6552	1	TIP-PENETRATION	

<END>

WORK TOOLS

220-9168 TIP GP-PENETRATION

S/N: BXY1-UP
K-110
FIELD INSTALLATION

SMCS-6805 **i02457808**

NOTE	REF NO	GRAPHIC REF	PART NUMBER	QTY	PART NAME 1 2 3 4 5 6 (PRODUCT LEVEL)	SEE PAGE
	1	1	**220-9110**	1	RETAINER-G.E.T. (K-110)	
	2	1	**232-2112**	1	TIP-HEAVY PENETRATION (K-110)	

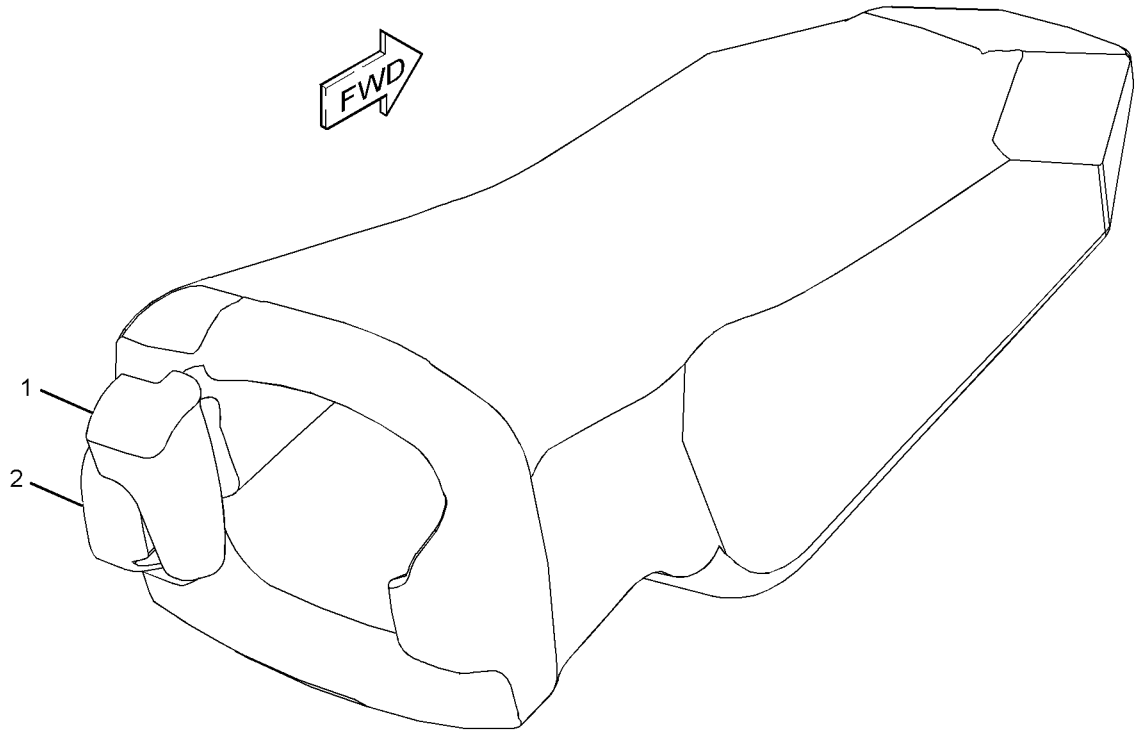

GRAPHIC #1 **<END>** g01229595

309-1065 TIP GP-PENETRATION—HEAVY DUTY

S/N: BXY1-UP
K110
FIELD INSTALLATION

SMCS-6805 **i03661207**

NOTE	PART NUMBER	QTY	PART NAME 1 2 3 4 5 6 (PRODUCT LEVEL)	SEE PAGE
	309-1119	1	RETAINER	
	286-2118	1	TIP-HEAVY PENETRATION	

<END>

WORK TOOLS

8J-9841 TIP GP-SHORT

S/N: BXY1-UP
J-550. HEAVY-DUTY
AN ATTACHMENT

SMCS-6805 **i02110589**

NOTE	REF NO	GRAPHIC REF	PART NUMBER	QTY	PART NAME 1 2 3 4 5 6 (PRODUCT LEVEL)	SEE PAGE
	1	1	**107-3378**	1	PIN	
	2	1	**107-8559**	1	RETAINER AS	
	3	1	**9W-8551**	1	TIP-SHORT (HEAVY-DUTY)	

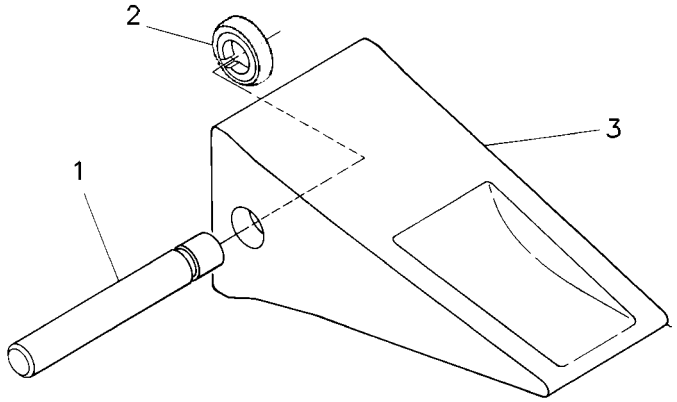

GRAPHIC #1 **<END>** g00119070

WORK TOOLS

9N-4561 TIP GP-SHORT

S/N: BXY1-UP
J-460. HEAVY DUTY
AN ATTACHMENT

SMCS-6805 **i01480314**

NOTE	REF NO	GRAPHIC REF	PART NUMBER	QTY	PART NAME 1 2 3 4 5 6 (PRODUCT LEVEL)	SEE PAGE
	1	1	**107-3469**	1	RETAINER AS	
	2	1	**9W-8451**	1	TIP-SHORT (HD)	
	3	1	**114-0468**	1	PIN	

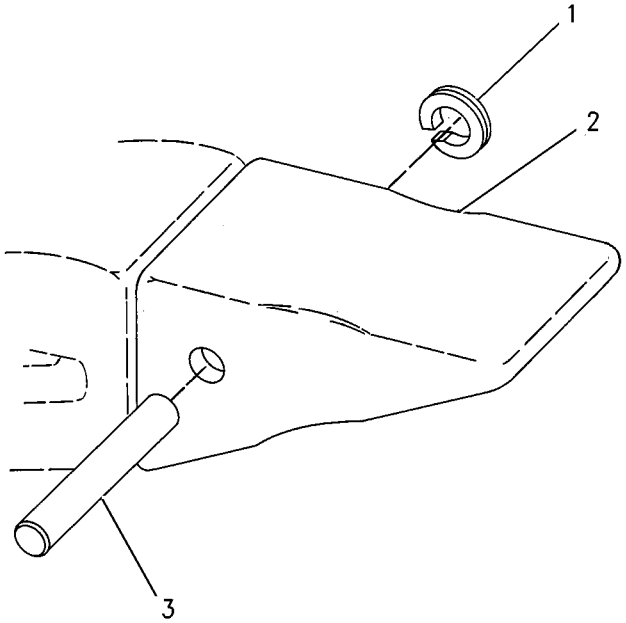

GRAPHIC #1 **<END>** g00770639

WORK TOOLS

317-4456 TIP-EXTRA-DUTY

S/N: BXY1-UP

FIELD INSTALLATION

SMCS-6805 **i03661201**

NOTE	REF NO	GRAPHIC REF	PART NUMBER	QTY	PART NAME 1 2 3 4 5 6 (PRODUCT LEVEL)	SEE PAGE
					(NO SERVICED PARTS)	

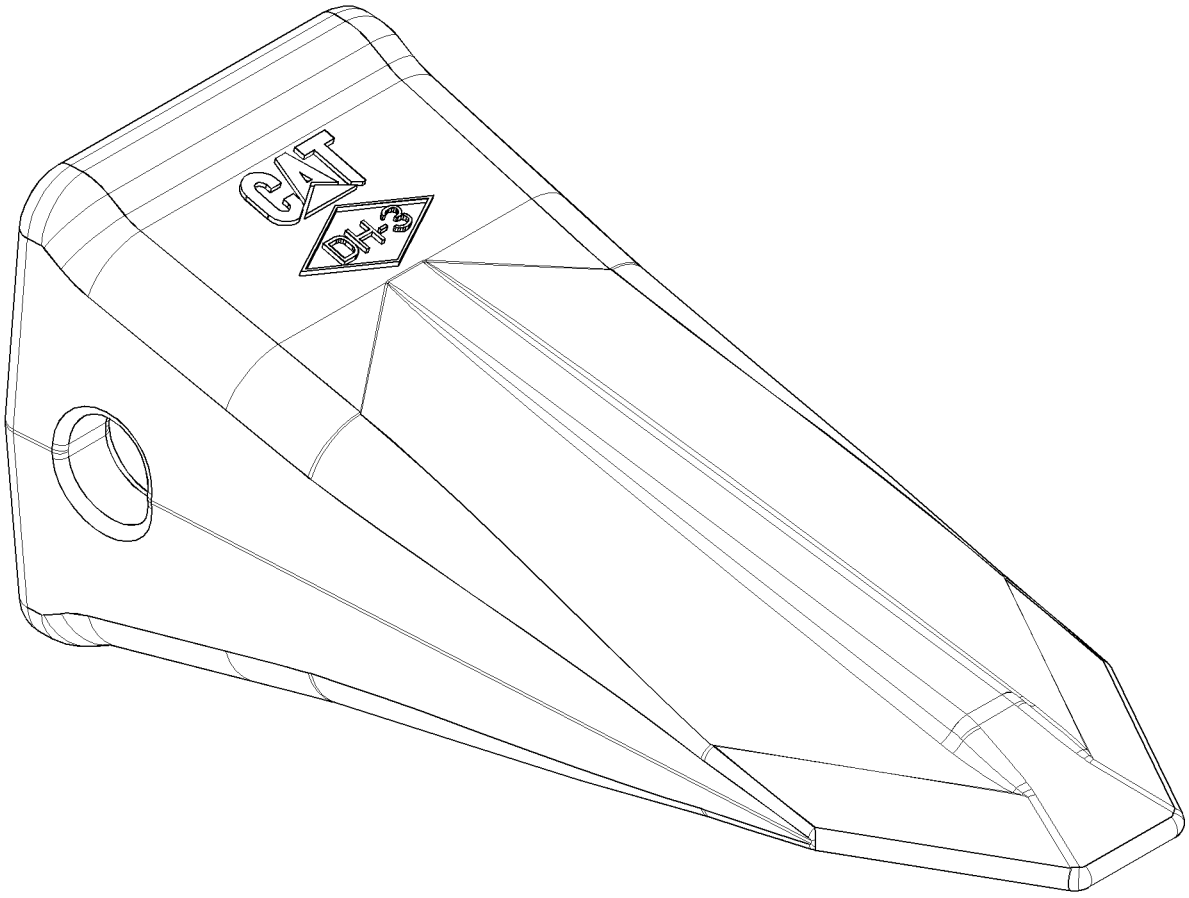

GRAPHIC #1 **<END>** g02059776

WORK TOOLS

232-2112 TIP-HEAVY PENETRATION

S/N: BXY1-UP
K-110
AN ATTACHMENT

SMCS-6805 **i02346413**

NOTE	REF NO	GRAPHIC REF	PART NUMBER	QTY	PART NAME 1 2 3 4 5 6 (PRODUCT LEVEL)	SEE PAGE
					(NO SERVICED PARTS)	

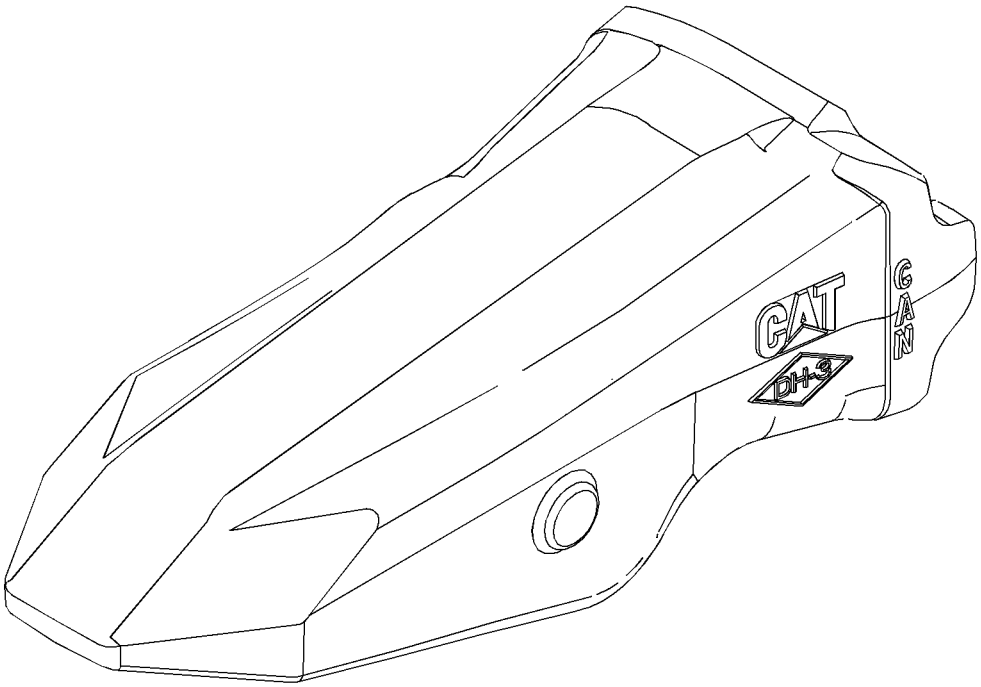

GRAPHIC #1 **<END>** g01289334

WORK TOOLS

264-2226 TIP-LONG

S/N: BXY1-UP
J-450
FIELD INSTALLATION

SMCS-6805 **i02379331**

NOTE	REF NO	GRAPHIC REF	PART NUMBER	QTY	PART NAME 1 2 3 4 5 6 (PRODUCT LEVEL)	SEE PAGE
					(NO SERVICED PARTS)	

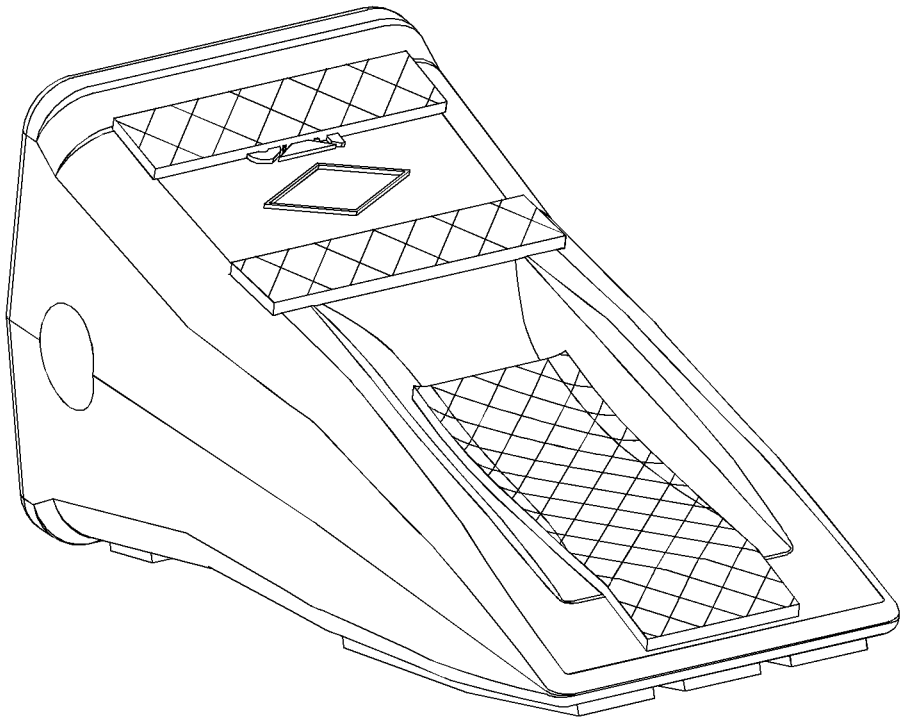

GRAPHIC #1 **<END>** g01250408

SERVICE EQUIPMENT AND SUPPLIES

9G-9288 CAP GP-PROTECTION

S/N: BXY1-UP

PART OF 308-2730 GUARD GP-REAR, 132-6143 TANK & MTG GP-HYDRAULIC

ALSO AN ATTACHMENT

SMCS-0663 **i02856829**

NOTE	REF NO	GRAPHIC REF	PART NUMBER	QTY	PART NAME 1 2 3 4 5 6 (PRODUCT LEVEL)	SEE PAGE
	1	1	**1L-5072**	1	DOWEL	
	2	1	**9M-7394**	1	LEVER (HYDRAULIC TANK FILL)	
	3	1	**5D-1911**	1	COVER-HYDRAULIC CAP	
	4	1	**2J-7761**	1	RING-RETAINING	
	5	1	**246-2641**	1	PADLOCK GP	
		1	**5P-8500**	1	KEY	

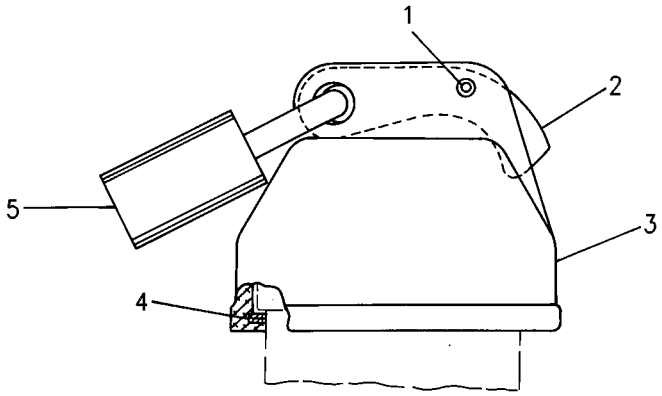

GRAPHIC #1 **<END>** g00600453

SERVICE EQUIPMENT AND SUPPLIES

234-8940 CERTIFICATION GP-MACHINE

S/N: BXY1-UP

FOR USE WITH 225-8337—PAGE 1166. CANNOT BE USED WITH 226-1956—PAGE 158

AN ATTACHMENT

SMCS-7557 **i02279491**

NOTE	PART NUMBER	QTY	PART NAME 1 2 3 4 5 6 (PRODUCT LEVEL)	SEE PAGE
	132-3392	3	FORM-CERTIFICATION	

<END>

SERVICE EQUIPMENT AND SUPPLIES

236-7530 FILM GP—PAYLOAD CONTROL

S/N: BXY1-UP

AN ATTACHMENT

SMCS-7405, 7557 **i02153525**

NOTE	REF NO	GRAPHIC REF	PART NUMBER	QTY	PART NAME 1 2 3 4 5 6 (PRODUCT LEVEL)	SEE PAGE
	1	1	**236-8117**	1	FILM-INFORMATION (PAYLOAD CONTROL)	

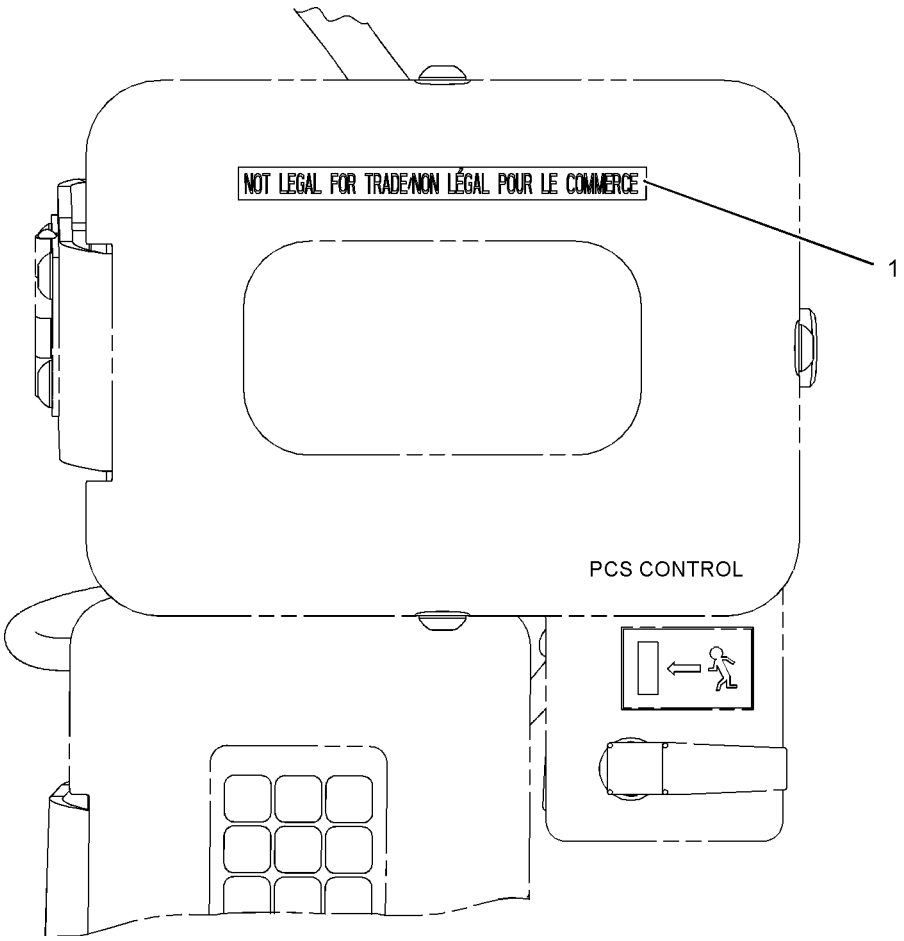

GRAPHIC #1 **<END>** g01095710

SERVICE EQUIPMENT AND SUPPLIES

252-9667 FILM GP

S/N: BXY1-1899

PART OF 233-8479 PLATE & FILM GP

SMCS-7405, 7557 **i02219405**

NOTE	REF NO	GRAPHIC REF	PART NUMBER	QTY	PART NAME 1 2 3 4 5 6 (PRODUCT LEVEL)	SEE PAGE
	1	1	**171-1856**	1	FILM-STRIPE (LH)	
	2	1	**100-5621**	2	FILM-IDENTIFICATION (CATERPILLAR)	
	3	1	**171-1855**	1	FILM-STRIPE (LH)	
	4	1	**171-1152**	1	FILM-STRIPE (RH)	
	5	1	**171-1151**	2	FILM-IDENTIFICATION (CAT)	
	6	1	**171-1150**	2	FILM-STRIPE	
	7	1	**252-9668**	1	FILM-STRIPE (988H, LH)	
	8	1	**252-9669**	1	FILM-STRIPE (988H, RH)	
	9	1	**171-1153**	1	FILM-STRIPE (RH)	

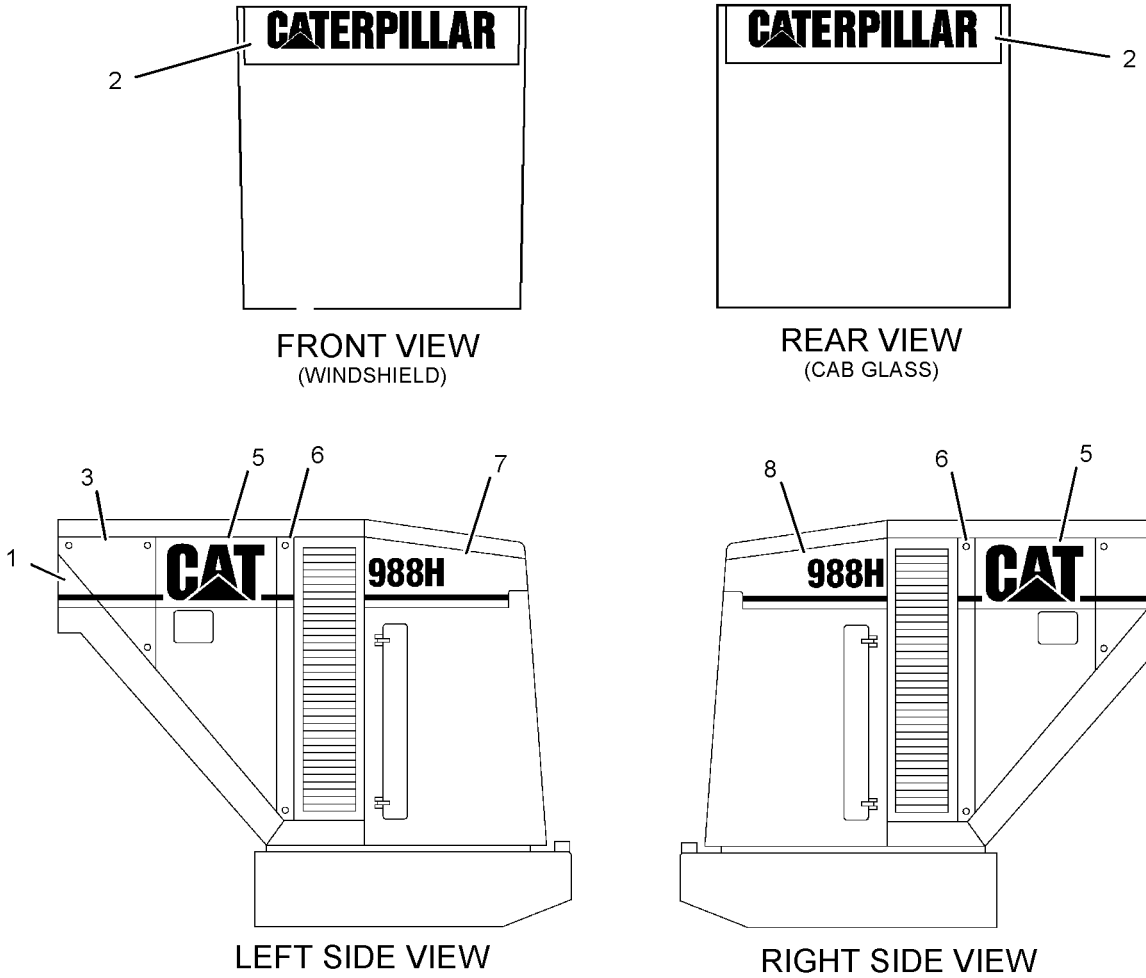

GRAPHIC #1 **<END>** g01125294

SERVICE EQUIPMENT AND SUPPLIES

291-5560 FILM GP

S/N: BXY1900-UP

PART OF 233-8479 PLATE & FILM GP

SMCS-7405, 7557 **i03014130**

NOTE	REF NO	GRAPHIC REF	PART NUMBER	QTY	PART NAME 1 2 3 4 5 6 (PRODUCT LEVEL)	SEE PAGE
	1	1	**100-5621**	1	FILM-IDENTIFICATION (CATERPILLAR)	
	2	1	**291-5558**	1	FILM-IDENTIFICATION (988H, LH)	
	3	1	**291-5561**	1	FILM-IDENTIFICATION (988H, RH)	
	4	1	**291-5556**	1	FILM-IDENTIFICATION (CAT, RH)	
	5	1	**291-5554**	1	FILM-STRIPE (FILLER, RH)	
	6	1	**253-0861**	2	FILM-INFORMATION (CAT POWER, ACERT TECHNOLOGY)	
	7	1	**291-5553**	1	FILM-STRIPE (FILLER, LH)	
	8	1	**291-5555**	1	FILM-IDENTIFICATION (CAT, LH)	
	9	1	**136-2186**	1	FILM-WINDOW (REAR)	

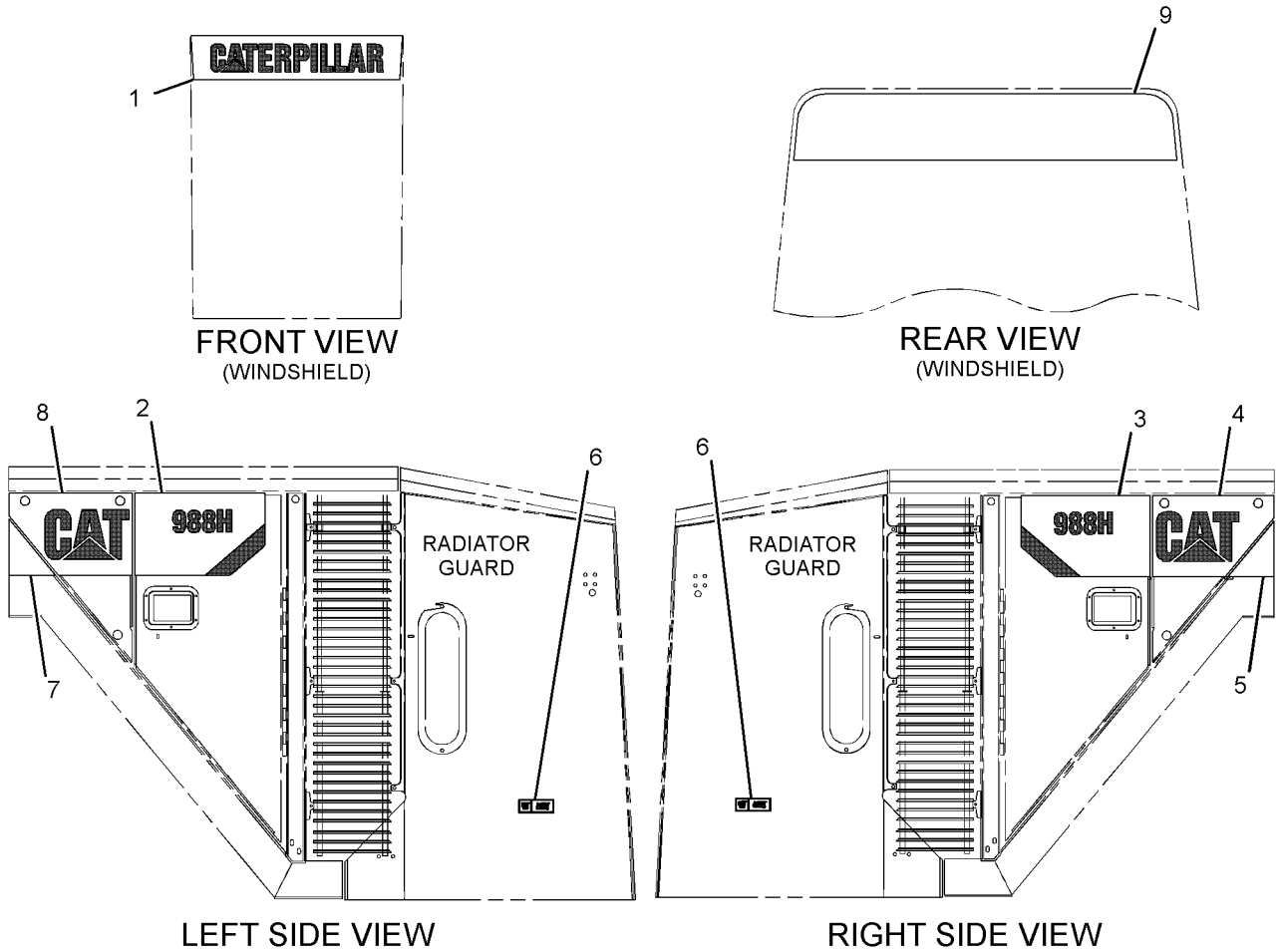

GRAPHIC #1 **<END>** g01535616

SERVICE EQUIPMENT AND SUPPLIES

226-1970 LINES GP-DIAGNOSTIC—REMOTE PRESSURE TAPS—XMSN, LOCKUP TORQUE CONVERTER

S/N: BXY1-2172

PART OF 231-7842 TORQUE CONVERTER AR-LOCKUP AN ATTACHMENT

SMCS-7554 **i02546327**

NOTE	REF NO	GRAPHIC REF	PART NUMBER	QTY	PART NAME 1 2 3 4 5 6 (PRODUCT LEVEL)	SEE PAGE
	1	3	**6B-6205**	3	SPACER (0.438X0.875X1.281-IN THK)	
	2	1	**6V-0852**	10	CAP-DUST	
	3	4	**118-6878**	1	BRACKET AS	
M		4	**8T-3490**	1	NUT-WELD (M10X1.5-THD)	
	4	3	**165-6750**	1	BRACKET AS	
M		3	**8T-3597**	1	NUT-WELD (M12X1.75-THD)	
	5	4	**185-6250**	10	FITTING AS	
	6	4	**228-4388**	1	BRACKET	
	7	3	**228-4389**	1	HOSE AS (TC IMPELLER CLUTCH PRESSURE)	
	8	3	**228-4390**	1	HOSE AS (TC LOCKUP CLUTCH PRESSURE)	
	9	3	**228-4391**	1	HOSE AS (TORQUE CONVERTER OUTLET PRESS)	
	10	3	**228-4392**	1	HOSE AS (TORQUE CONVERTER INLET PRESS)	
	11	2	**228-4393**	1	HOSE AS (XMSN CLUTCH 6 PRESSURE)	
	12	2	**228-4394**	1	HOSE AS (XMSN CLUTCH 5 PRESSURE)	
	13	2	**228-4395**	1	HOSE AS (XMSN CLUTCH 4 PRESSURE)	
	14	2	**228-4396**	1	HOSE AS (XMSN CLUTCH 3 PRESSURE)	
	15	2	**228-4397**	1	HOSE AS (XMSN CLUTCH 2 PRESSURE)	
	16	2	**228-4403**	1	HOSE AS (XMSN CLUTCH 1 PRESSURE)	
	17	2,3	*148-8325*	9	CONNECTOR AS	
					(EACH INCLUDES)	
		2,3	**6V-8641**	1	CONNECTOR	
		2,3	**3J-1907**	1	SEAL-O-RING	
		2,3	**4J-5477**	1	SEAL-O-RING	
	18	3	*148-8368*	1	ELBOW AS	
		3	**6V-8627**	1	ELBOW	
		3	**3J-1907**	1	SEAL-O-RING	
		3	**4J-5477**	1	SEAL-O-RING	
	19	4	**170-4735**	10	RING-RETAINING	
	20	3	**1S-6420**	1	CLIP	
	21	4	**4J-5477**	10	SEAL-O-RING	
	22	3	**6D-4246**	3	CLIP	
	23	1	**6V-1228**	1	CLIP	
	24	3,4	**8T-4121**	4	WASHER-HARD (11X21X2.5-MM THK)	
M	25	4	**8T-4136**	1	BOLT (M10X1.5X25-MM)	
M	26	1,3	**8T-4139**	3	BOLT (M12X1.75X30-MM)	
	27	1,3	**8T-4223**	3	WASHER-HARD (13.5X25.5X3-MM THK)	
M	28	3	**8T-6466**	3	BOLT (M10X1.5X60-MM)	
	29	3,4	**9X-8250**	2	CLIP	
E	30	2	**206-2723**		GUARD-HOSE (94.5-CM)	

E-ORDER BY THE CENTIMETER
M-METRIC PART

226-1970 **LINES GP-DIAGNOSTIC** *(contd.)* **i02546327**

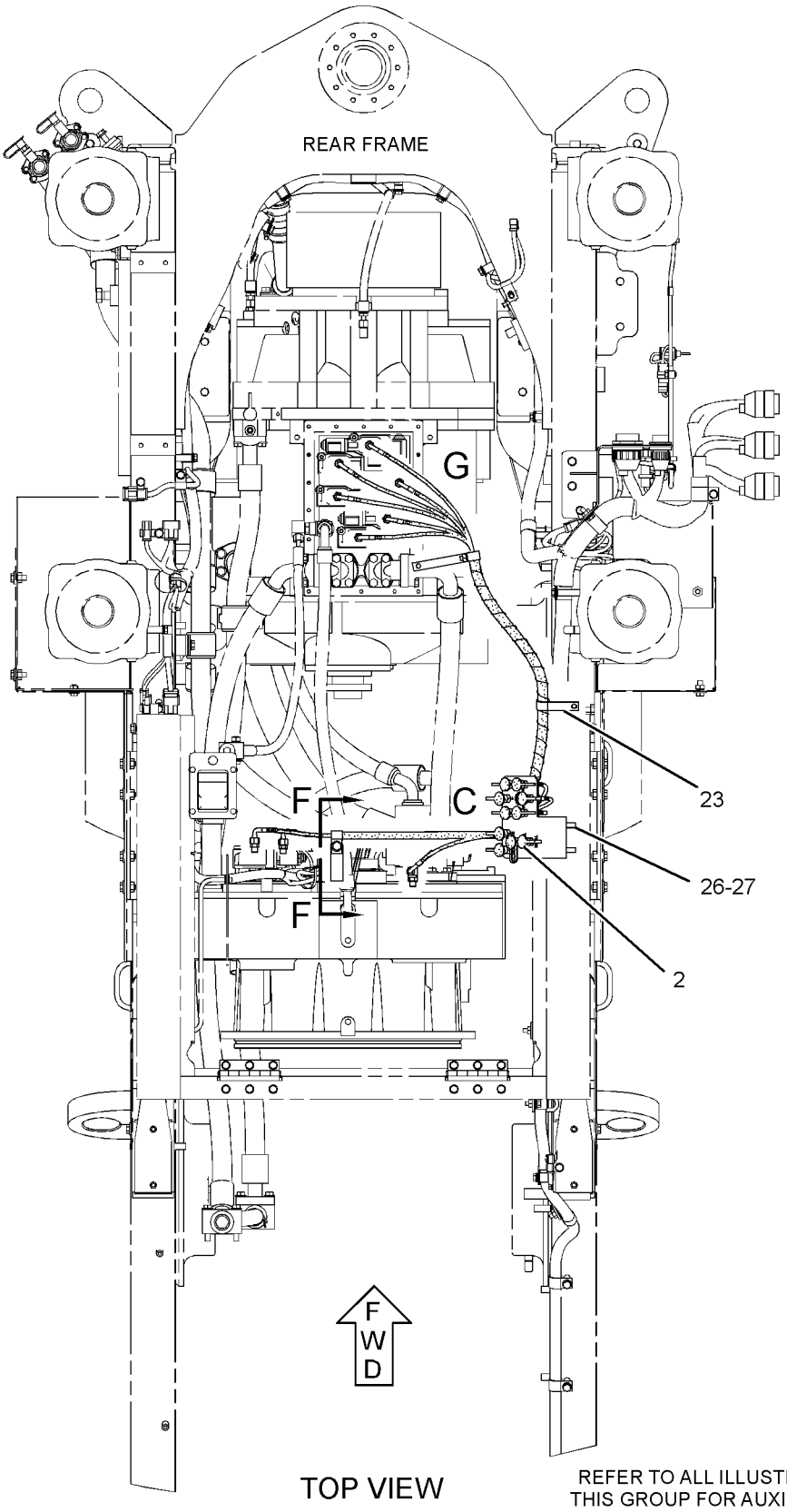

GRAPHIC #1

g01274295

226-1970 **LINES GP-DIAGNOSTIC** *(contd.)* **i02546327**

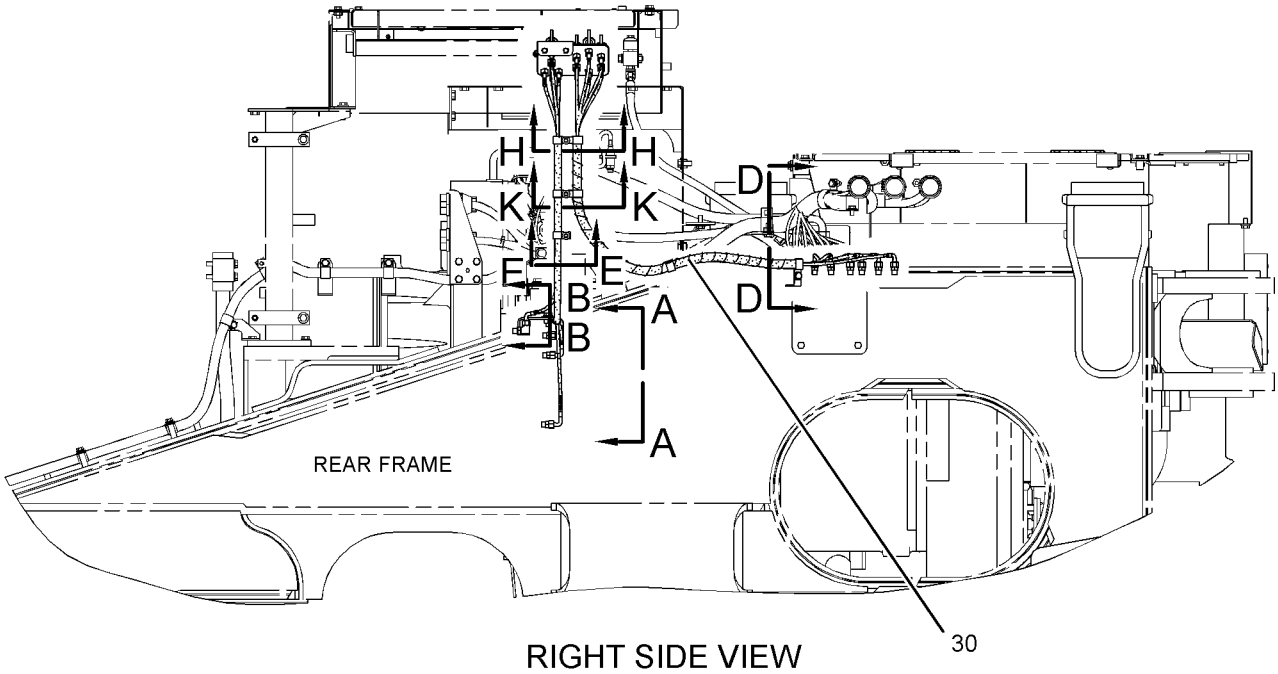

RIGHT SIDE VIEW

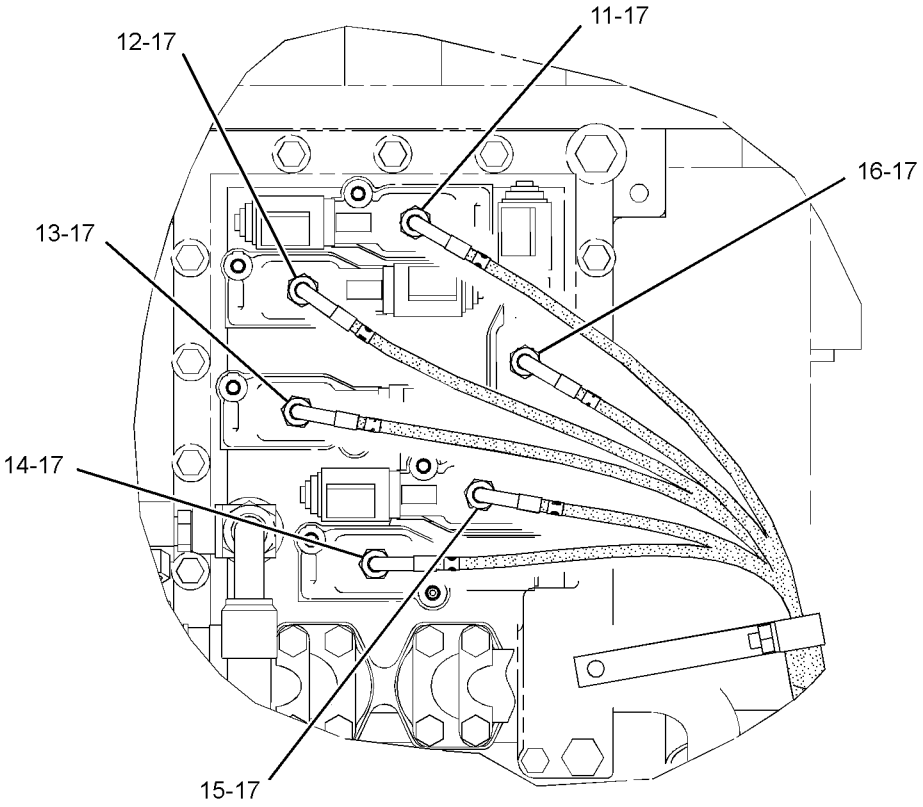

VIEW OF AREA G

REFER TO ALL ILLUSTRATIONS OF THIS GROUP FOR AUXILIARY VIEWS

GRAPHIC #2 g01229261

226-1970 **LINES GP-DIAGNOSTIC** *(contd.)* **i02546327**

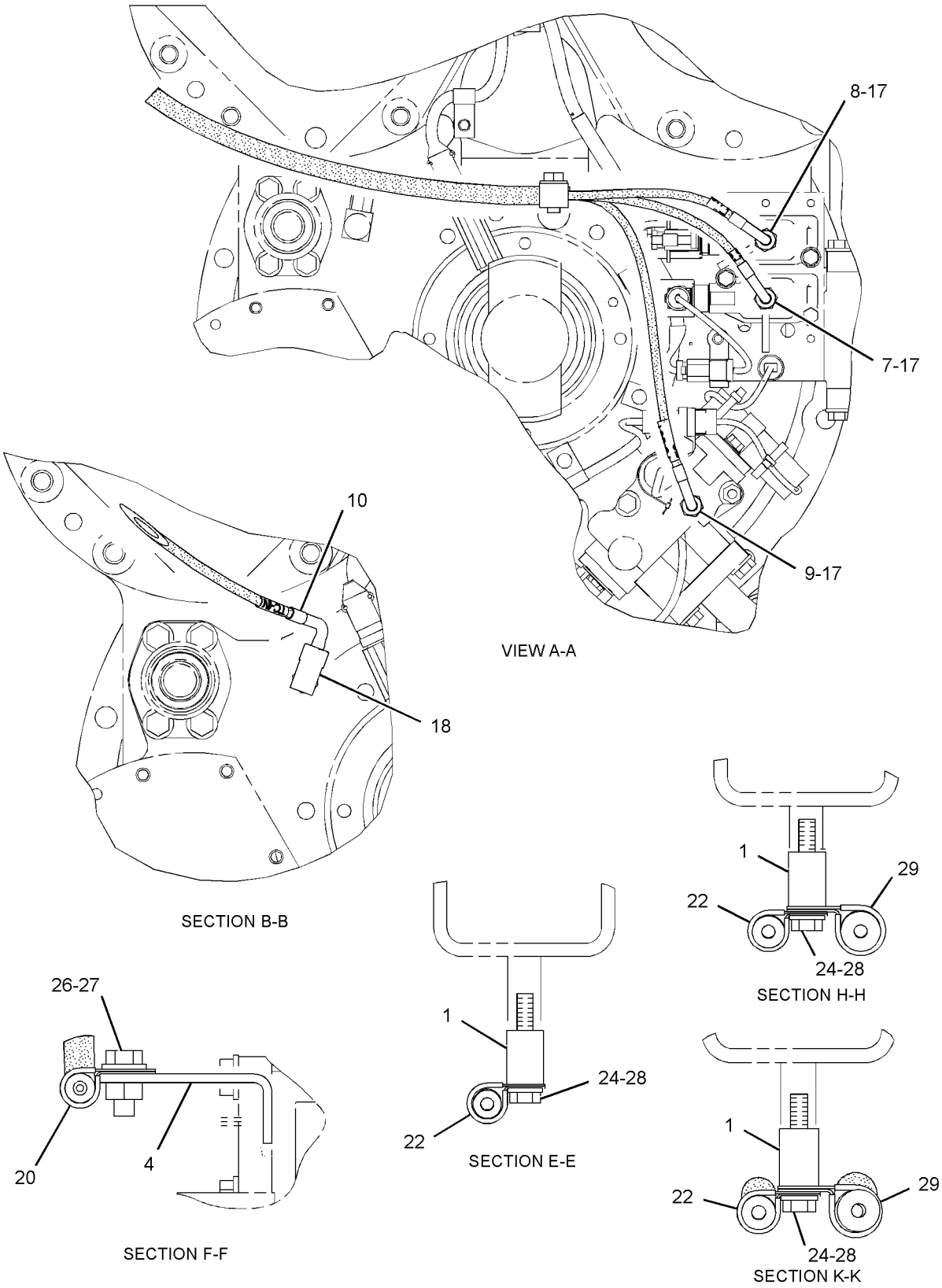

GRAPHIC #3 g01229262

226-1970 **LINES GP-DIAGNOSTIC** *(contd.)* **i02546327**

	REMOTE PRESSURE TAPS DESCRIPTION
1	TRANSMISSION CLUTCH 1 PRESSURE
2	TRANSMISSION CLUTCH 2 PRESSURE
3	TRANSMISSION CLUTCH 3 PRESSURE
4	TRANSMISSION CLUTCH 4 PRESSURE
5	TRANSMISSION CLUTCH 5 PRESSURE
6	TRANSMISSION CLUTCH 6 PRESSURE
TC - IN	TORQUE CONVERTER INLET PRESSURE
TC - OUT	TORQUE CONVERTER OUTLET PRESSURE
IC	TORQUE CONVERTER IMPELLER CLUTCH PRESSURE
LUC	TORQUE CONVERTER LOCKUP CLUTCH PRESSURE

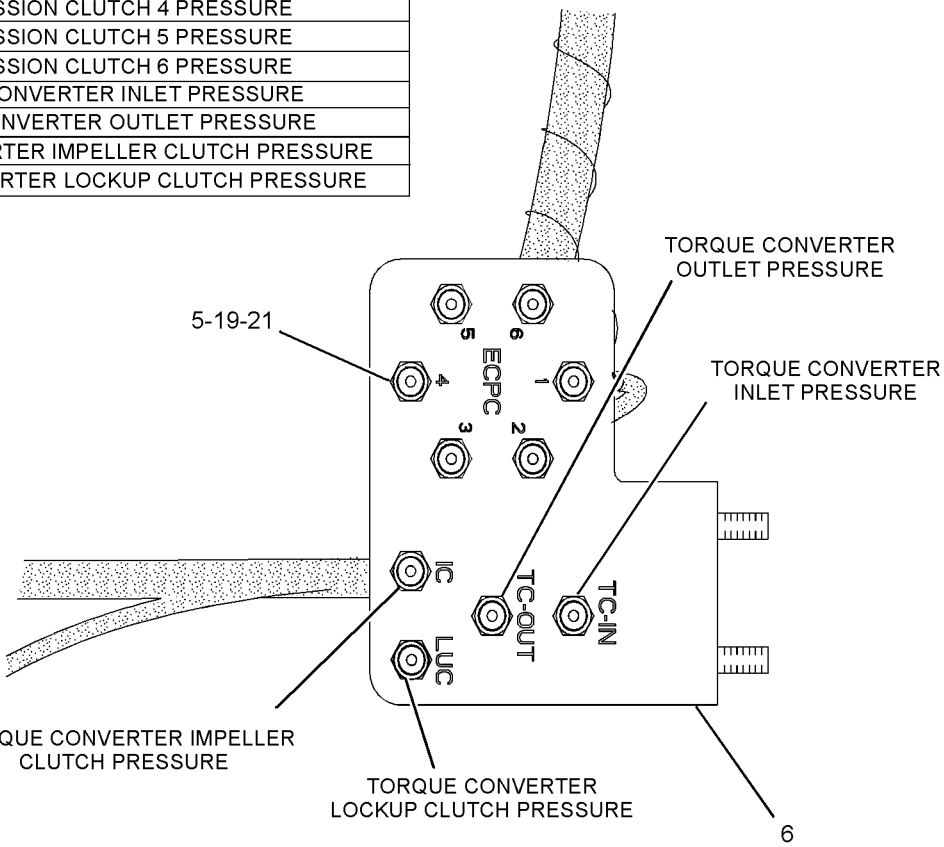

VIEW OF AREA C
(WITH CAPS REMOVED)

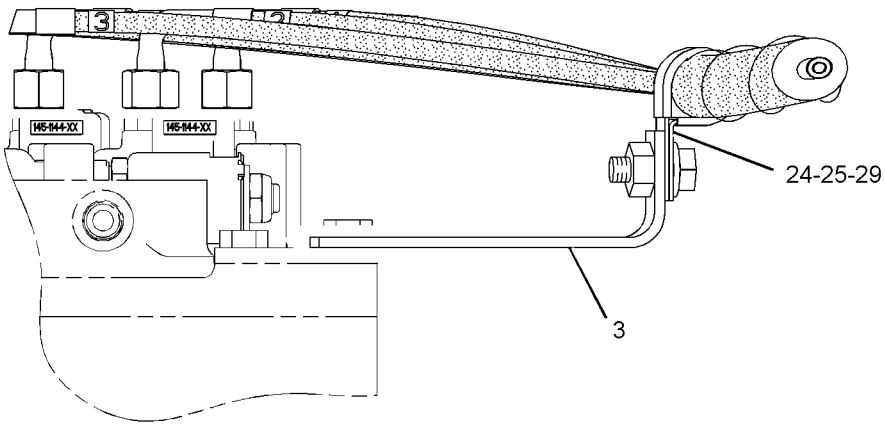

SECTION D-D

GRAPHIC #4 **<END>** g01274296

SERVICE EQUIPMENT AND SUPPLIES

226-1971 LINES GP-DIAGNOSTIC—REMOTE PRESSURE TAPS—TRANSMISSION, STANDARD TC

S/N: BXY1-2171

PART OF 231-7844 TORQUE CONVERTER AR

AN ATTACHMENT

SMCS-7554 **i02456690**

NOTE	REF NO	GRAPHIC REF	PART NUMBER	QTY	PART NAME 1 2 3 4 5 6 (PRODUCT LEVEL)	SEE PAGE
	1	1	**6B-6205**	3	SPACER (0.438X0.875X1.281-IN THK)	
	2	1	**6V-0852**	9	CAP-DUST	
	3	1	**118-6878**	1	BRACKET AS	
	4	1	**165-6750**	1	BRACKET AS	
	5	2	**185-6250**	9	FITTING AS	
	6	2	**228-4388**	1	BRACKET	
	7	1	**228-4389**	1	HOSE AS (TC IMPELLER CLUTCH PRESSURE)	
	8	1	**228-4391**	1	HOSE AS (TORQUE CONVERTER OUTLET PRESS)	
	9	1	**228-4392**	1	HOSE AS (TORQUE CONVERTER INLET PRESS)	
	10	1	**228-4393**	1	HOSE AS (XMSN CLUTCH 6 PRESSURE)	
	11	1	**228-4394**	1	HOSE AS (XMSN CLUTCH 5 PRESSURE)	
	12	1	**228-4395**	1	HOSE AS (XMSN CLUTCH 4 PRESSURE)	
	13	1	**228-4396**	1	HOSE AS (XMSN CLUTCH 3 PRESSURE)	
	14	1	**228-4397**	1	HOSE AS (XMSN CLUTCH 2 PRESSURE)	
	15	1	**228-4403**	1	HOSE AS (XMSN CLUTCH 1 PRESSURE)	
	16	1	*148-8325*	8	CONNECTOR AS	
					(EACH INCLUDES)	
		1	**6V-8641**	1	CONNECTOR	
		1	**3J-1907**	1	SEAL-O-RING	
		1	**4J-5477**	1	SEAL-O-RING	
	17	1	*148-8368*	1	ELBOW AS	
		1	**6V-8627**	1	ELBOW	
		1	**3J-1907**	1	SEAL-O-RING	
		1	**4J-5477**	1	SEAL-O-RING	
	18	2	**170-4735**	9	RING-RETAINING	
	19	2	**4J-5477**	9	SEAL-O-RING	
	20	1	**6V-1228**	1	CLIP	
	21	1	**6V-2383**	2	CLIP	
	22	1	**8M-2773**	3	CLIP	
	23	1	**8T-4121**	4	WASHER-HARD (11X21X2.5-MM THK)	
M	24	1	**8T-4136**	1	BOLT (M10X1.5X25-MM)	
M	25	1	**8T-4139**	3	BOLT (M12X1.75X30-MM)	
	26	1	**8T-4223**	3	WASHER-HARD (13.5X25.5X3-MM THK)	
M	27	1	**8T-6466**	3	BOLT (M10X1.5X60-MM)	
	28	1	**9X-8250**	3	CLIP	
E	29	1	**206-2723**		GUARD-HOSE (95-CM)	

E-ORDER BY THE CENTIMETER
M-METRIC PART

226-1971 **LINES GP-DIAGNOSTIC** *(contd.)* **i02456690**

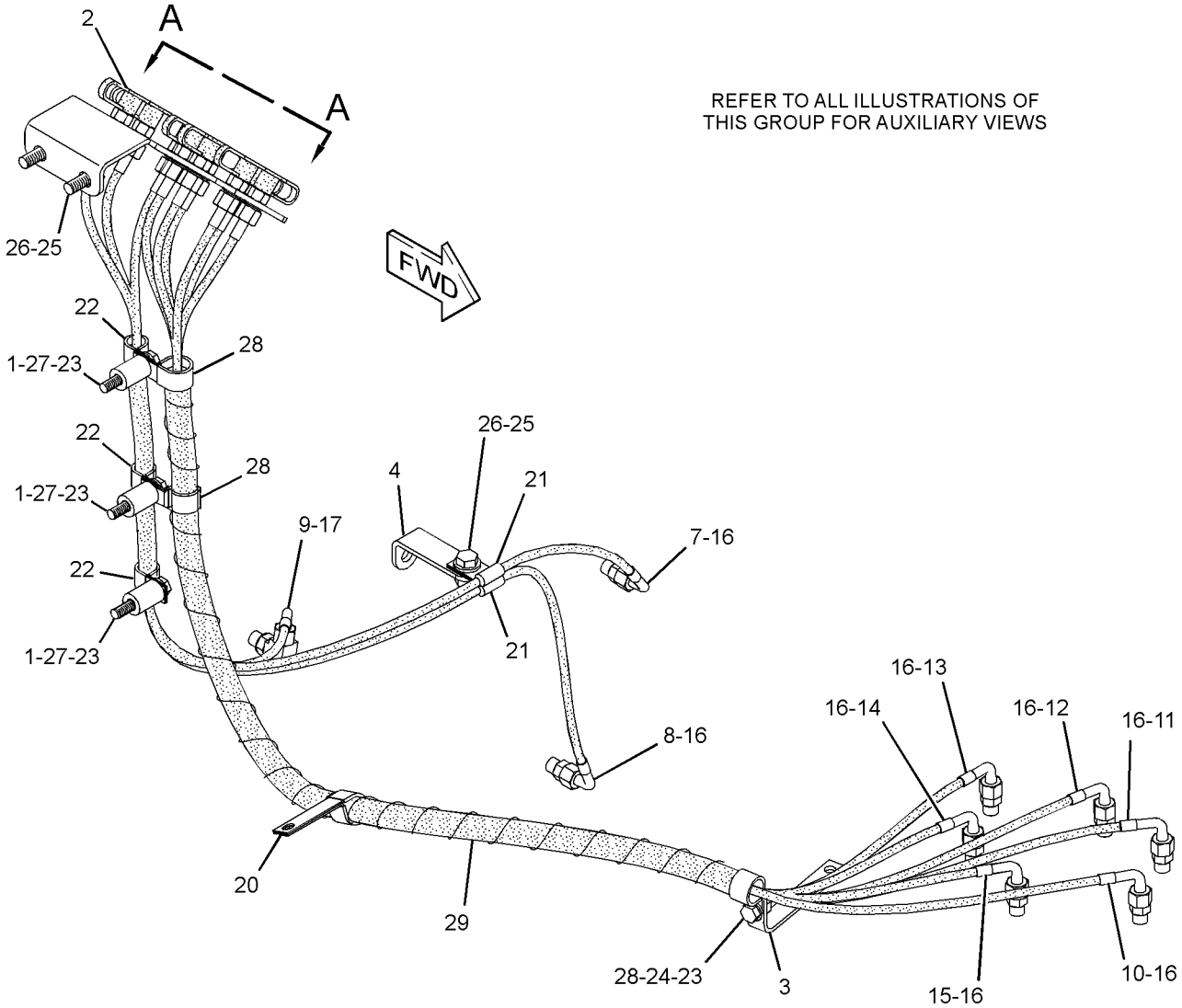

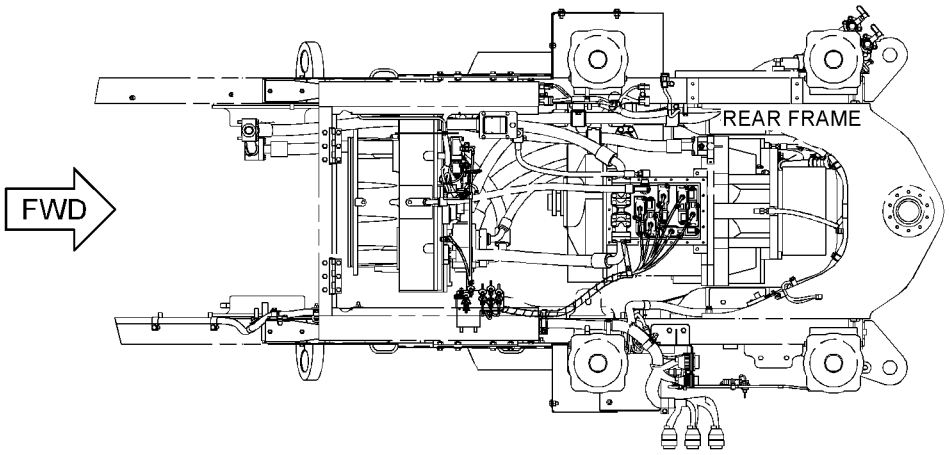

TOP VIEW

GRAPHIC #1 g01230684

226-1971 **LINES GP-DIAGNOSTIC** *(contd.)* **i02456690**

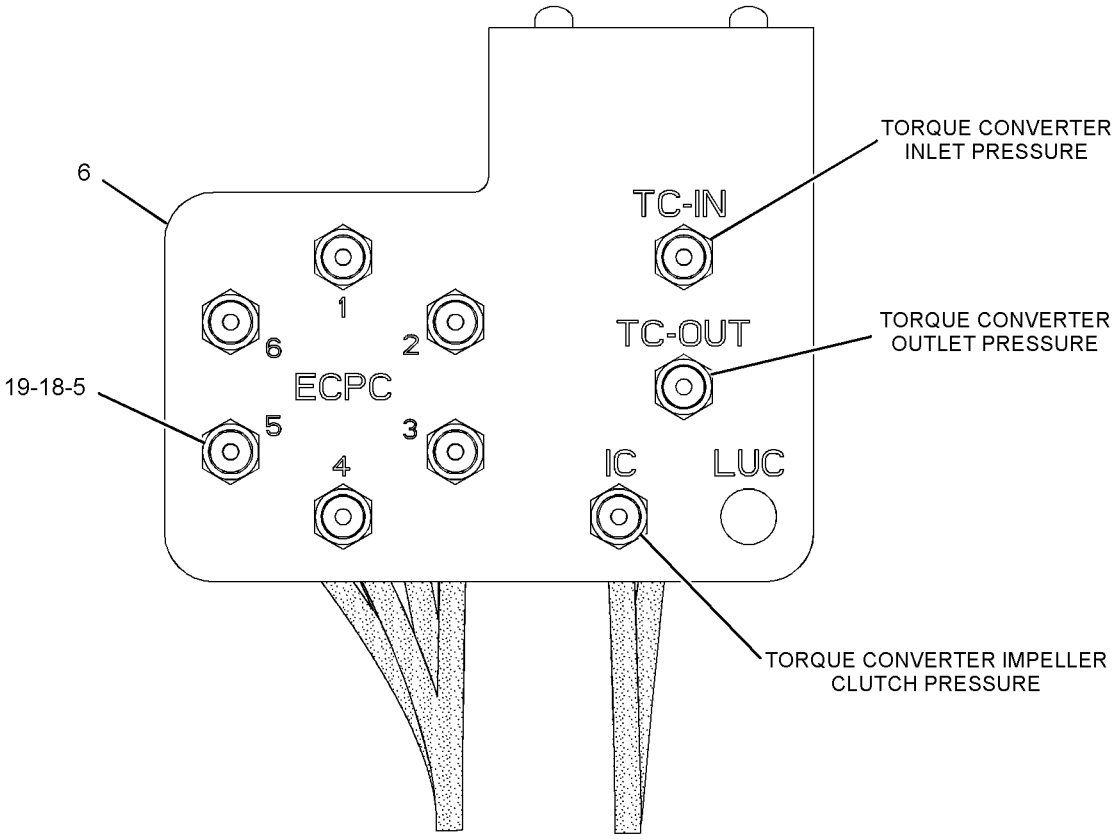

VIEW A-A
(WITH CAPS REMOVED)

	REMOTE PRESSURE TAPS DESCRIPTION
1	TRANSMISSION CLUTCH 1 PRESSURE
2	TRANSMISSION CLUTCH 2 PRESSURE
3	TRANSMISSION CLUTCH 3 PRESSURE
4	TRANSMISSION CLUTCH 4 PRESSURE
5	TRANSMISSION CLUTCH 5 PRESSURE
6	TRANSMISSION CLUTCH 6 PRESSURE
TC - IN	TORQUE CONVERTER INLET PRESSURE
TC - OUT	TORQUE CONVERTER OUTLET PRESSURE
IC	TORQUE CONVERTER IMPELLER CLUTCH PRESSURE

GRAPHIC #2 **<END>** g01231655

SERVICE EQUIPMENT AND SUPPLIES

311-7600 LINES GP-DIAGNOSTIC

S/N: BXY2173-3999

PART OF 231-7842 TORQUE CONVERTER AR-LOCKUP

AN ATTACHMENT

SMCS-7554 **i03264867**

NOTE	REF NO	GRAPHIC REF	PART NUMBER	QTY	PART NAME 1 2 3 4 5 6 (PRODUCT LEVEL)	SEE PAGE
	1	1	**6B-6205**	3	SPACER (0.438X0.875X1.281-IN THK)	
	2	1	**6V-0852**	10	CAP-DUST	
	3	1	**118-6878**	1	BRACKET AS	
M		1	**8T-3490**	1	NUT-WELD (M10X1.5-THD)	
	4	2	**165-6750**	1	BRACKET AS	
	5	1	**185-6250**	10	FITTING AS	
	6	1	**311-7595**	1	BRACKET	
	7	1	**311-7596**	1	HOSE AS	
	8	2	**311-7597**	1	HOSE AS	
	9	2	**311-7598**	1	HOSE AS	
	10	2	**311-7599**	1	HOSE AS	
	11	1	**311-7603**	1	HOSE AS	
	12	1	**311-7604**	1	HOSE AS	
	13	1	**311-7605**	1	HOSE AS	
	14	1	**311-7606**	1	HOSE AS	
	15	1	**311-7607**	1	HOSE AS	
	16	1	**311-7608**	1	HOSE AS	
	17	1,2	*148-8325*	9	CONNECTOR AS	
					(EACH INCLUDES)	
		1,2	**3J-1907**	1	SEAL-O-RING	
		1,2	**4J-5477**	1	SEAL-O-RING	
		1,2	**6V-8641**	1	CONNECTOR	
	18	2	*148-8368*	1	ELBOW AS	
		2	**3J-1907**	1	SEAL-O-RING	
		2	**4J-5477**	1	SEAL-O-RING	
		2	**6V-8627**	1	ELBOW	
	19	1	**170-4735**	10	RING-RETAINING	
	20	1	**1S-0994**	3	CLIP	
	21	2	**1S-6420**	1	CLIP	
	22	1	**223-3490**	3	CLIP	
	23	1	**4J-5477**	10	SEAL-O-RING	
	24	1	**6V-1228**	1	CLIP	
	25	1	**8T-4121**	4	WASHER-HARD (11X21X2.5-MM THK)	
M	26	1	**8T-4136**	1	BOLT (M10X1.5X25-MM)	
M	27	1,2	**8T-4139**	3	BOLT (M12X1.75X30-MM)	
	28	1,2	**8T-4223**	3	WASHER-HARD (13.5X25.5X3-MM THK)	
M	29	1	**8T-6466**	3	BOLT (M10X1.5X60-MM)	
E	30	2	**206-2723**		GUARD-HOSE (33-CM)	
E	30A	2	**206-2723**		GUARD-HOSE (37-CM)	
E	31	1	**7I-1024**		GUARD-HOSE (54-CM)	
E	32	1	**5I-4200**		GUARD (34-CM)	

E-ORDER BY THE CENTIMETER
M-METRIC PART

311-7600 **LINES GP-DIAGNOSTIC** *(contd.)* **i03264867**

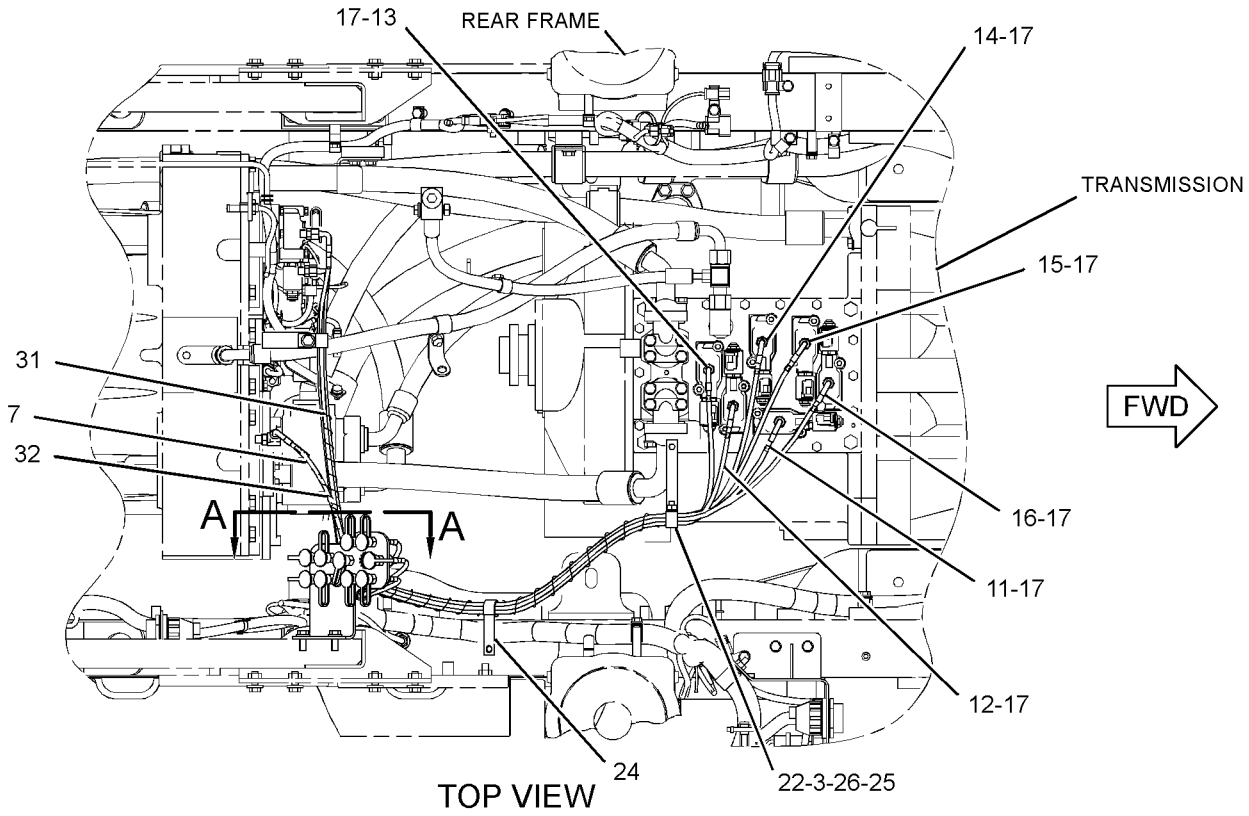

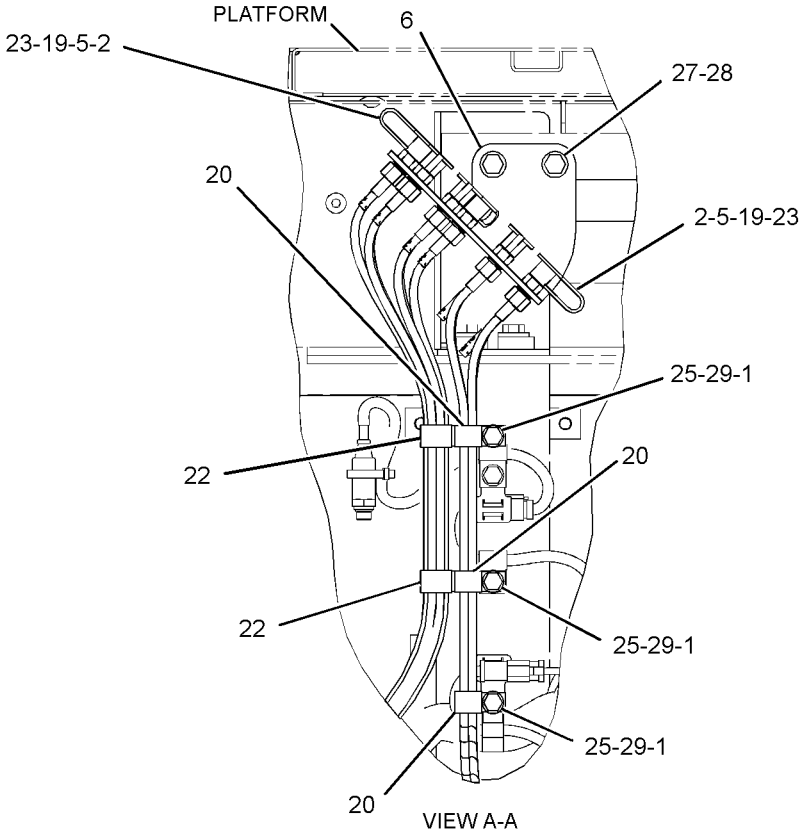

GRAPHIC #1 g01911558

311-7600 **LINES GP-DIAGNOSTIC** *(contd.)* **i03264867**

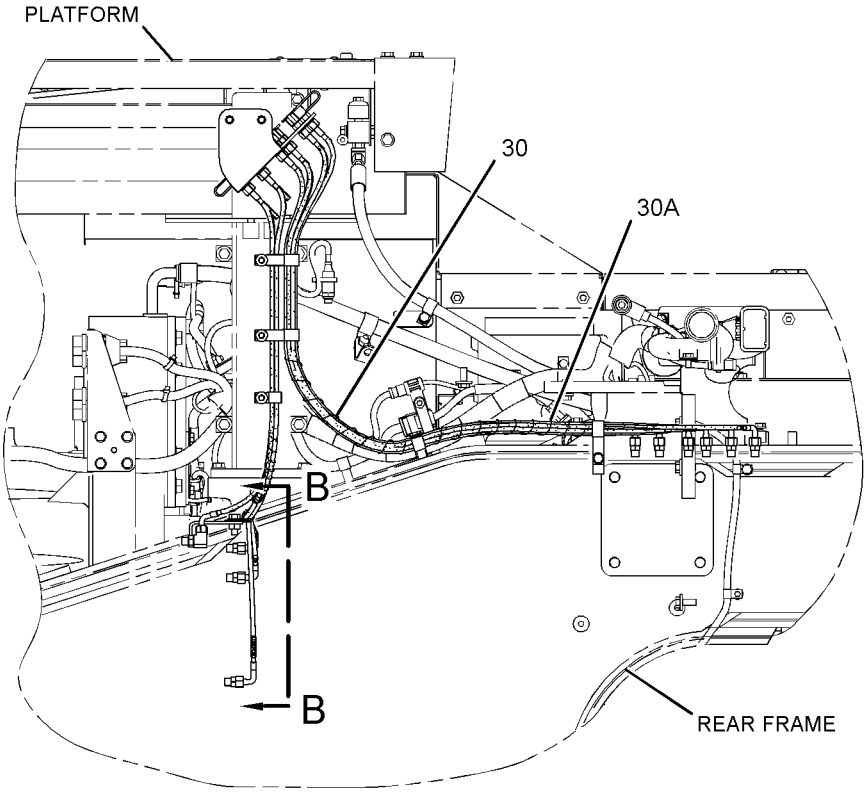

RIGHT SIDE VIEW

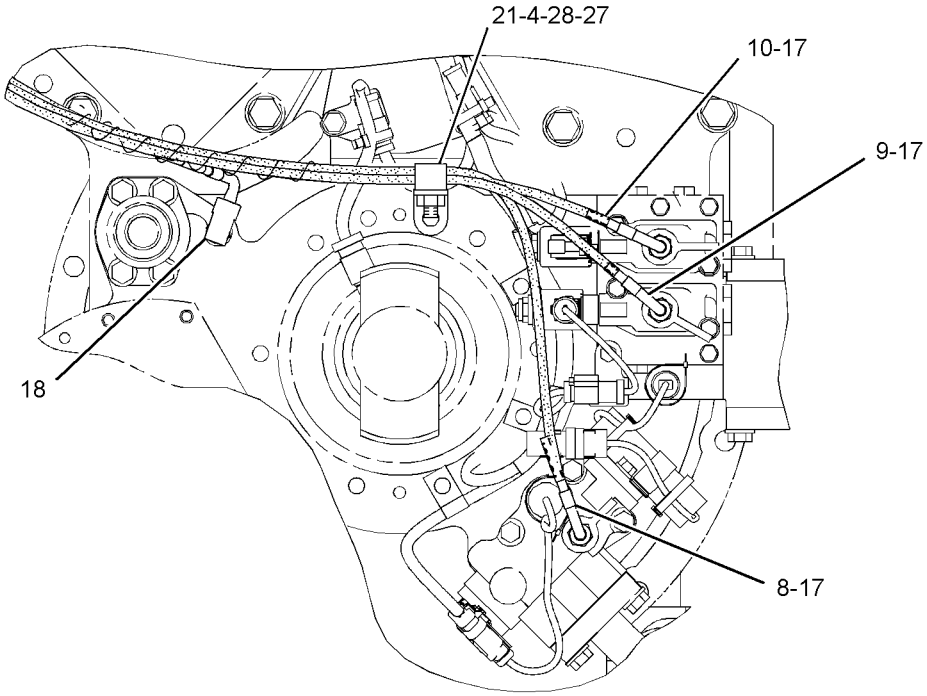

VIEW B-B

GRAPHIC #2 **<END>** g01911561

SERVICE EQUIPMENT AND SUPPLIES

311-7600 LINES GP-DIAGNOSTIC

S/N: BXY4000-UP

PART OF 231-7842 TORQUE CONVERTER AR-LOCKUP

AN ATTACHMENT

SMCS-7554 **i03792509**

NOTE	REF NO	GRAPHIC REF	PART NUMBER	QTY	PART NAME 1 2 3 4 5 6 (PRODUCT LEVEL)	SEE PAGE
	1	1	**6B-6205**	3	SPACER (0.438X0.875X1.281-IN THK)	
	2	1	**6V-0852**	10	CAP-DUST	
	3	1	**118-6878**	1	BRACKET AS	
C	4	2	**101-9083**	1	BRACKET AS	
	5	1	**185-6250**	10	FITTING AS	
	6	1	**311-7595**	1	BRACKET	
	7	1	**311-7596**	1	HOSE AS	
	8	2	**311-7597**	1	HOSE AS	
	9	2	**311-7598**	1	HOSE AS	
	10	2	**311-7599**	1	HOSE AS	
	11	1	**311-7603**	1	HOSE AS	
	12	1	**311-7604**	1	HOSE AS	
	13	1	**311-7605**	1	HOSE AS	
	14	1	**311-7606**	1	HOSE AS	
	15	1	**311-7607**	1	HOSE AS	
	16	1	**311-7608**	1	HOSE AS	
	17	1,2	*148-8325*	9	CONNECTOR AS	
					(EACH INCLUDES)	
		1,2	**3J-1907**	1	SEAL-O-RING	
		1,2	**4J-5477**	1	SEAL-O-RING	
		1,2	**6V-8641**	1	CONNECTOR	
	18	2	*148-8368*	1	ELBOW AS	
		2	**3J-1907**	1	SEAL-O-RING	
		2	**4J-5477**	1	SEAL-O-RING	
		2	**6V-8627**	1	ELBOW	
	19	1	**170-4735**	10	RING-RETAINING	
	20	1	**1S-0994**	3	CLIP	
C	21	2	**8M-2773**	1	CLIP	
	23	1	**4J-5477**	10	SEAL-O-RING	
C	24	1	**6V-1228**	4	CLIP	
C	25	1	**8T-4121**	5	WASHER-HARD (11X21X2.5-MM THK)	
CM	26	1	**8T-4136**	2	BOLT (M10X1.5X25-MM)	
CM	27	1,2	**8T-4139**	2	BOLT (M12X1.75X30-MM)	
C	28	1,2	**8T-4223**	2	WASHER-HARD (13.5X25.5X3-MM THK)	
M	29	1	**8T-6466**	3	BOLT (M10X1.5X60-MM)	
E	30	2	**206-2723**		GUARD-HOSE (33-CM)	
E	30A	2	**206-2723**		GUARD-HOSE (37-CM)	
E	31	1	**7I-1024**		GUARD-HOSE (54-CM)	
E	32	1	**5I-4200**		GUARD (34-CM)	

C-CHANGE FROM PREVIOUS TYPE
E-ORDER BY THE CENTIMETER
M-METRIC PART

311-7600 **LINES GP-DIAGNOSTIC** *(contd.)* **i03792509**

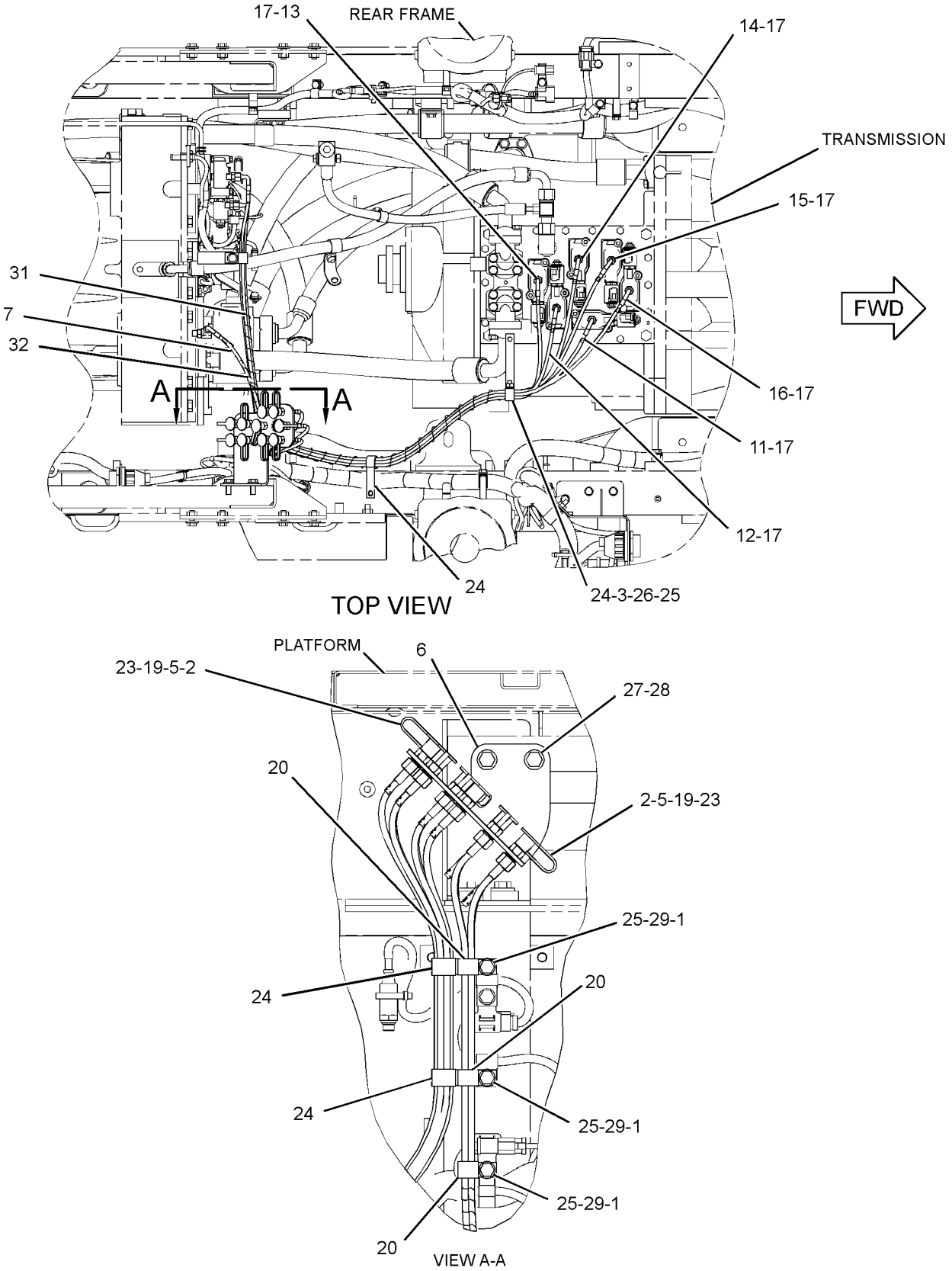

GRAPHIC #1 g02059434

311-7600 **LINES GP-DIAGNOSTIC** *(contd.)* **i03792509**

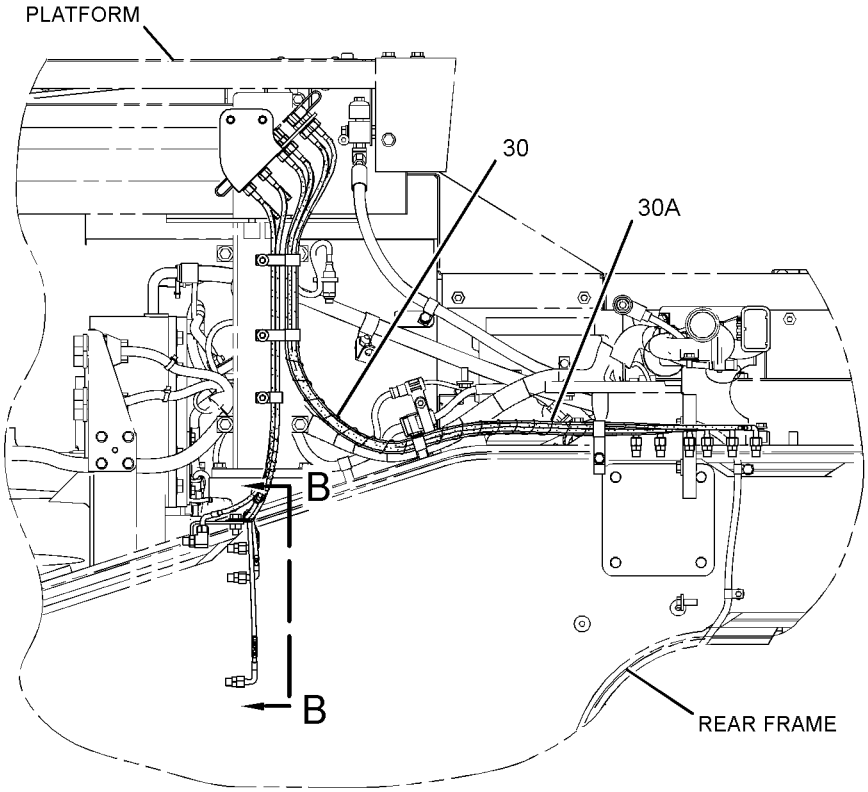

RIGHT SIDE VIEW

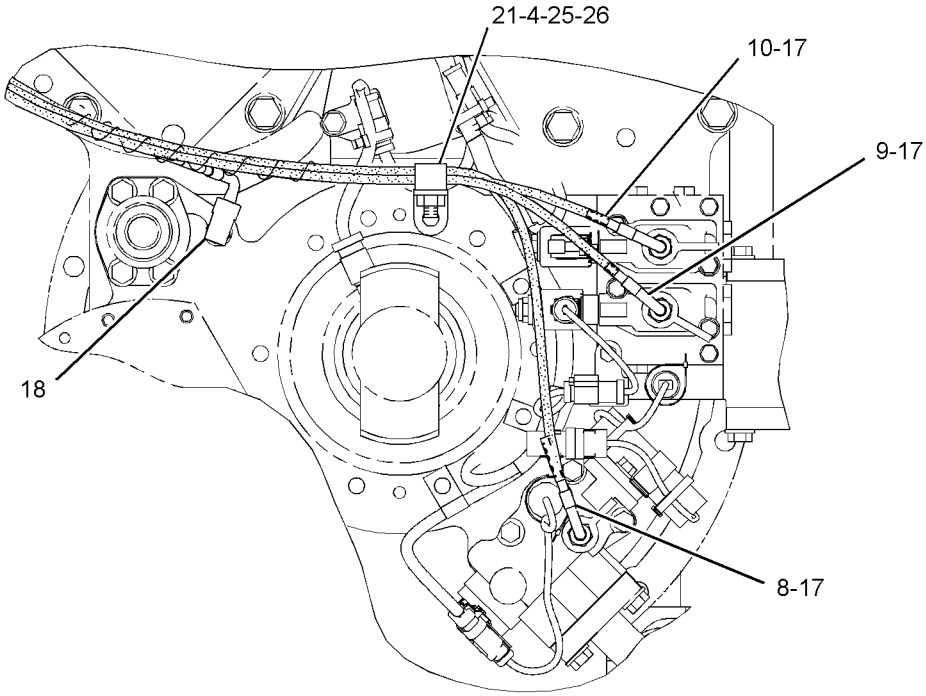

VIEW B-B

GRAPHIC #2 **<END>** g02059493

SERVICE EQUIPMENT AND SUPPLIES

311-7601 LINES GP-DIAGNOSTIC

S/N: BXY2172-3999

PART OF 231-7844 TORQUE CONVERTER AR

AN ATTACHMENT

SMCS-7554 **i03267106**

NOTE	REF NO	GRAPHIC REF	PART NUMBER	QTY	PART NAME 1 2 3 4 5 6 (PRODUCT LEVEL)	SEE PAGE
	1	1	**6B-6205**	3	SPACER (0.438X0.875X1.281-IN THK)	
	2	1	**6V-0852**	9	CAP-DUST	
	3	1	**118-6878**	1	BRACKET AS	
M		1	**8T-3490**	1	NUT-WELD (M10X1.5-THD)	
	4	2	**165-6750**	1	BRACKET AS	
	5	1	**185-6250**	9	FITTING AS	
	6	1	**311-7595**	1	BRACKET	
	7	1	**311-7596**	1	HOSE AS	
	8	2	**311-7597**	1	HOSE AS	
	9	2	**311-7598**	1	HOSE AS	
	10	1	**311-7603**	1	HOSE AS	
	11	1	**311-7604**	1	HOSE AS	
	12	1	**311-7605**	1	HOSE AS	
	13	1	**311-7606**	1	HOSE AS	
	14	1	**311-7607**	1	HOSE AS	
	15	1	**311-7608**	1	HOSE AS	
	16	1,2	*148-8325*	8	CONNECTOR AS	
					(EACH INCLUDES)	
		1,2	**3J-1907**	1	SEAL-O-RING	
		1,2	**4J-5477**	1	SEAL-O-RING	
		1,2	**6V-8641**	1	CONNECTOR	
	17	2	*148-8368*	1	ELBOW AS	
		2	**3J-1907**	1	SEAL-O-RING	
		2	**4J-5477**	1	SEAL-O-RING	
		2	**6V-8627**	1	ELBOW	
	18	1	**170-4735**	9	RING-RETAINING	
	19	1	**223-3490**	3	CLIP	
	20	1	**4J-5477**	9	SEAL-O-RING	
	21	1	**6V-1228**	1	CLIP	
	22	2	**6V-2383**	2	CLIP	
	23	1	**8M-2773**	3	CLIP	
	24	1	**8T-4121**	4	WASHER-HARD (11X21X2.5-MM THK)	
M	25	1	**8T-4136**	1	BOLT (M10X1.5X25-MM)	
M	26	1,2	**8T-4139**	3	BOLT (M12X1.75X30-MM)	
	27	1,2	**8T-4223**	3	WASHER-HARD (13.5X25.5X3-MM THK)	
M	28	1	**8T-6466**	3	BOLT (M10X1.5X60-MM)	
E	29	2	**206-2723**		GUARD-HOSE (33-CM)	
E	29A	2	**206-2723**		GUARD-HOSE (37-CM)	
E	30	1	**5I-4200**		GUARD (34-CM)	
E	31	1	**7I-1024**		GUARD-HOSE (54-CM)	

E-ORDER BY THE CENTIMETER
M-METRIC PART

311-7601 **LINES GP-DIAGNOSTIC** *(contd.)* **i03267106**

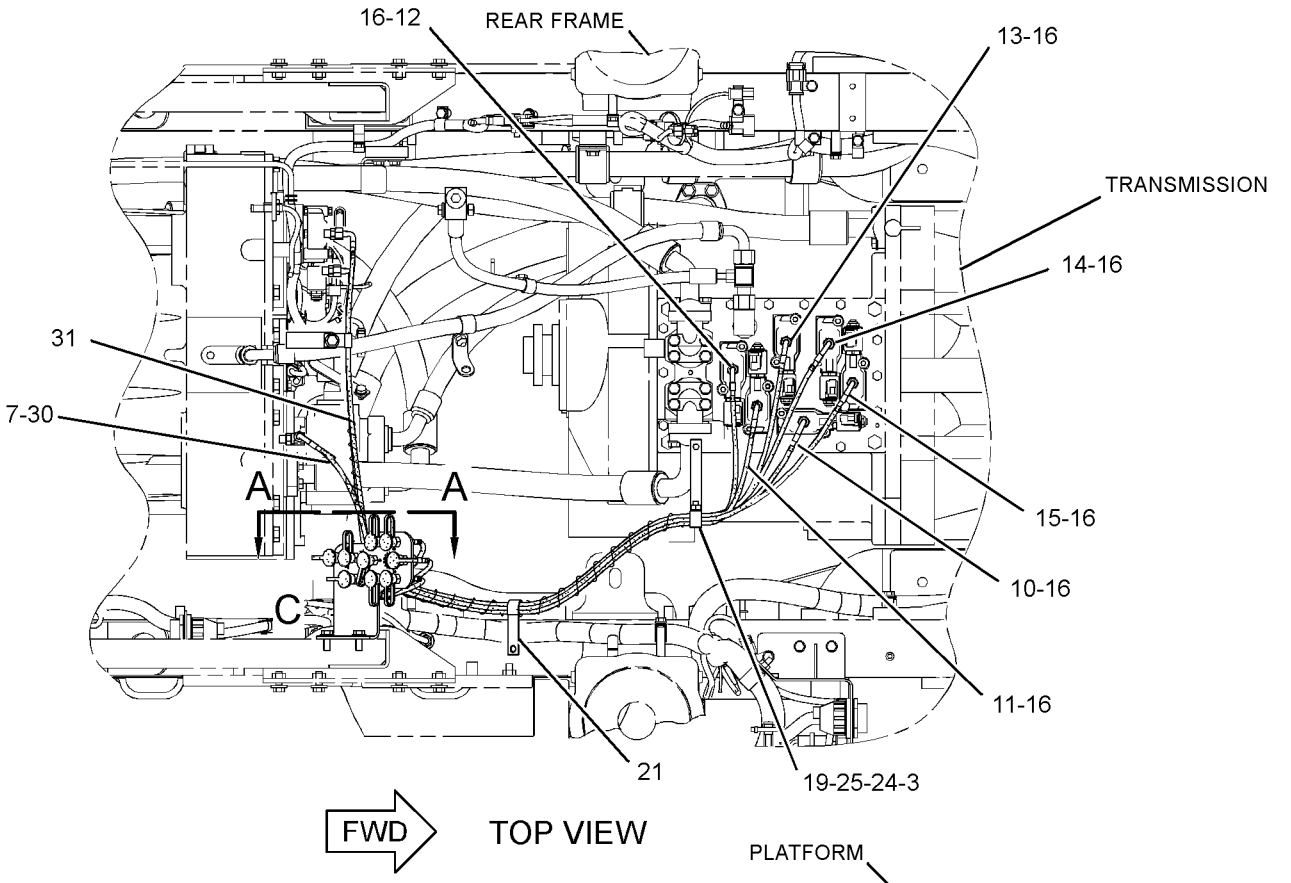

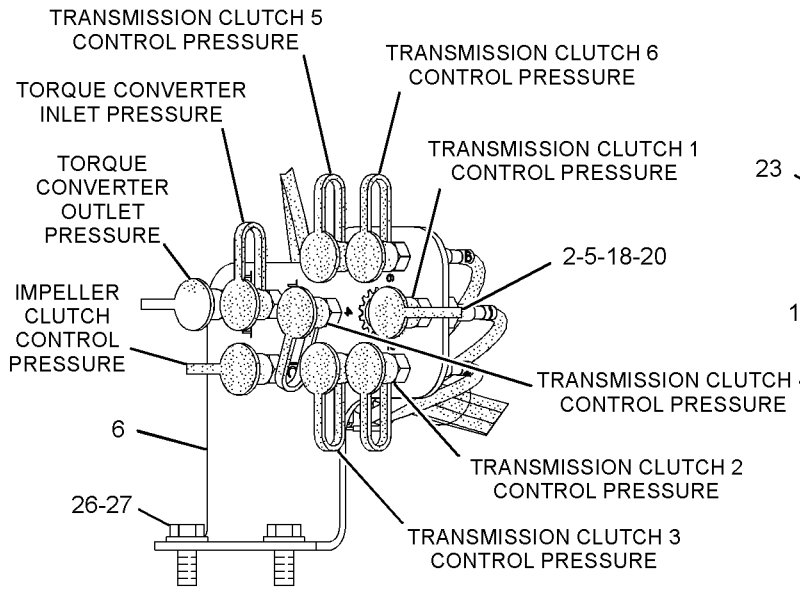

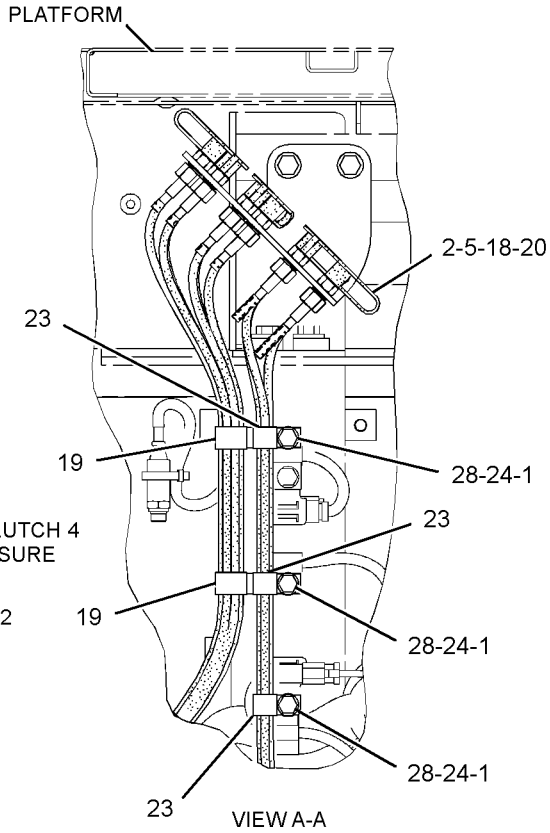

GRAPHIC #1 g01900020

311-7601 **LINES GP-DIAGNOSTIC** *(contd.)* **i03267106**

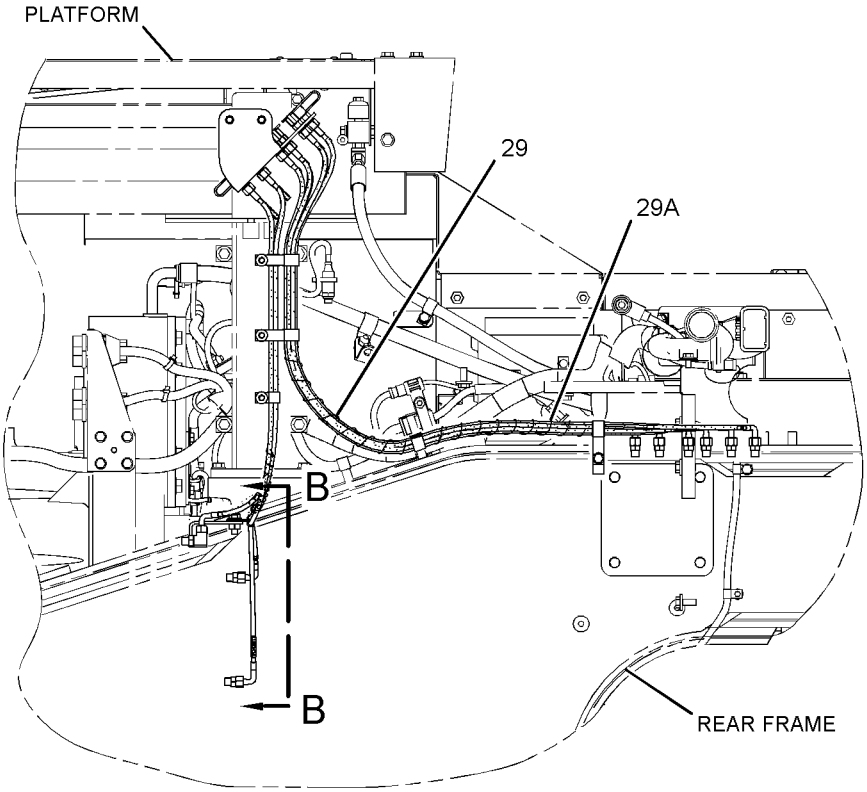

RIGHT SIDE VIEW

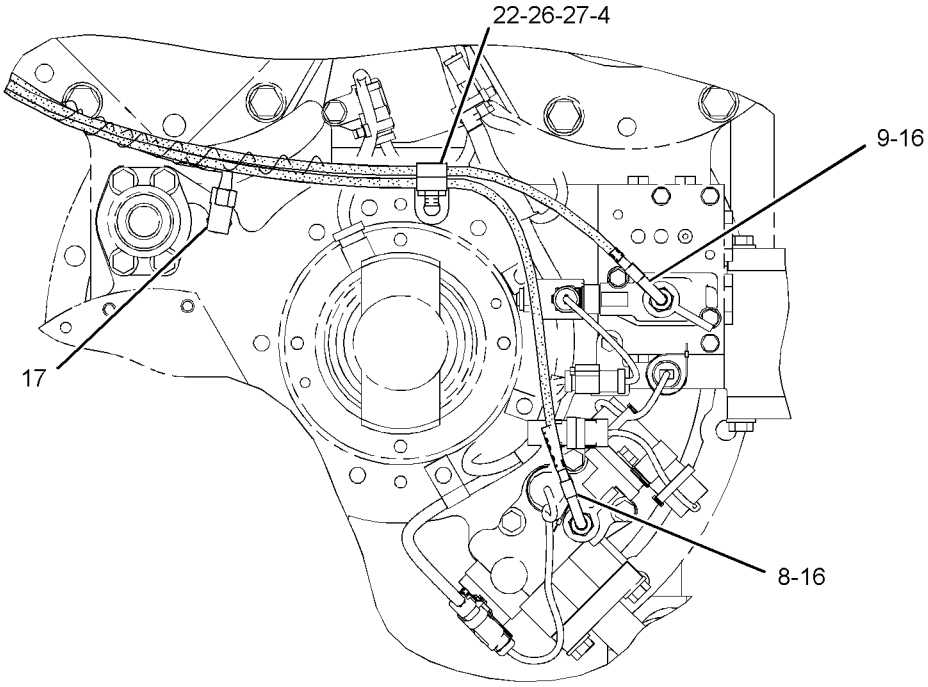

VIEW B-B

GRAPHIC #2 **<END>** g01900021

SERVICE EQUIPMENT AND SUPPLIES

311-7601 LINES GP-DIAGNOSTIC

S/N: BXY4000-UP

PART OF 231-7844 TORQUE CONVERTER AR

AN ATTACHMENT

SMCS-7554 **i03792776**

NOTE	REF NO	GRAPHIC REF	PART NUMBER	QTY	PART NAME 1 2 3 4 5 6 (PRODUCT LEVEL)	SEE PAGE
	1	1	**6B-6205**	3	SPACER (0.438X0.875X1.281-IN THK)	
	2	1	**6V-0852**	9	CAP-DUST	
	3	1	**118-6878**	1	BRACKET AS	
C	4	2	**101-9083**	1	BRACKET AS	
	5	1	**185-6250**	9	FITTING AS	
	6	1	**311-7595**	1	BRACKET	
	7	1	**311-7596**	1	HOSE AS	
	8	2	**311-7597**	1	HOSE AS	
	9	2	**311-7598**	1	HOSE AS	
	10	1	**311-7603**	1	HOSE AS	
	11	1	**311-7604**	1	HOSE AS	
	12	1	**311-7605**	1	HOSE AS	
	13	1	**311-7606**	1	HOSE AS	
	14	1	**311-7607**	1	HOSE AS	
	15	1	**311-7608**	1	HOSE AS	
	16	1,2	*148-8325*	8	CONNECTOR AS	
					(EACH INCLUDES)	
		1,2	**3J-1907**	1	SEAL-O-RING	
		1,2	**4J-5477**	1	SEAL-O-RING	
		1,2	**6V-8641**	1	CONNECTOR	
	17	2	*148-8368*	1	ELBOW AS	
		2	**3J-1907**	1	SEAL-O-RING	
		2	**4J-5477**	1	SEAL-O-RING	
		2	**6V-8627**	1	ELBOW	
	18	1	**170-4735**	9	RING-RETAINING	
CM	19	1	**8T-4195**	1	BOLT (M10X1.5X30-MM)	
	20	1	**4J-5477**	9	SEAL-O-RING	
C	21	1	**6V-1228**	4	CLIP	
	22	2	**6V-2383**	2	CLIP	
	23	1	**8M-2773**	3	CLIP	
	24	1	**8T-4121**	4	WASHER-HARD (11X21X2.5-MM THK)	
M	25	1	**8T-4136**	1	BOLT (M10X1.5X25-MM)	
CM	26	1,2	**8T-4139**	2	BOLT (M12X1.75X30-MM)	
C	27	1,2	**8T-4223**	2	WASHER-HARD (13.5X25.5X3-MM THK)	
M	28	1	**8T-6466**	3	BOLT (M10X1.5X60-MM)	
E	29	2	**206-2723**		GUARD-HOSE (33-CM)	
E	29A	2	**206-2723**		GUARD-HOSE (37-CM)	
E	30	1	**5I-4200**		GUARD (34-CM)	
E	31	1	**7I-1024**		GUARD-HOSE (54-CM)	
C	32	1	**7X-7729**	1	WASHER (11X25X3-MM THK)	

C-CHANGE FROM PREVIOUS TYPE
E-ORDER BY THE CENTIMETER
M-METRIC PART

311-7601 **LINES GP-DIAGNOSTIC** *(contd.)* **i03792776**

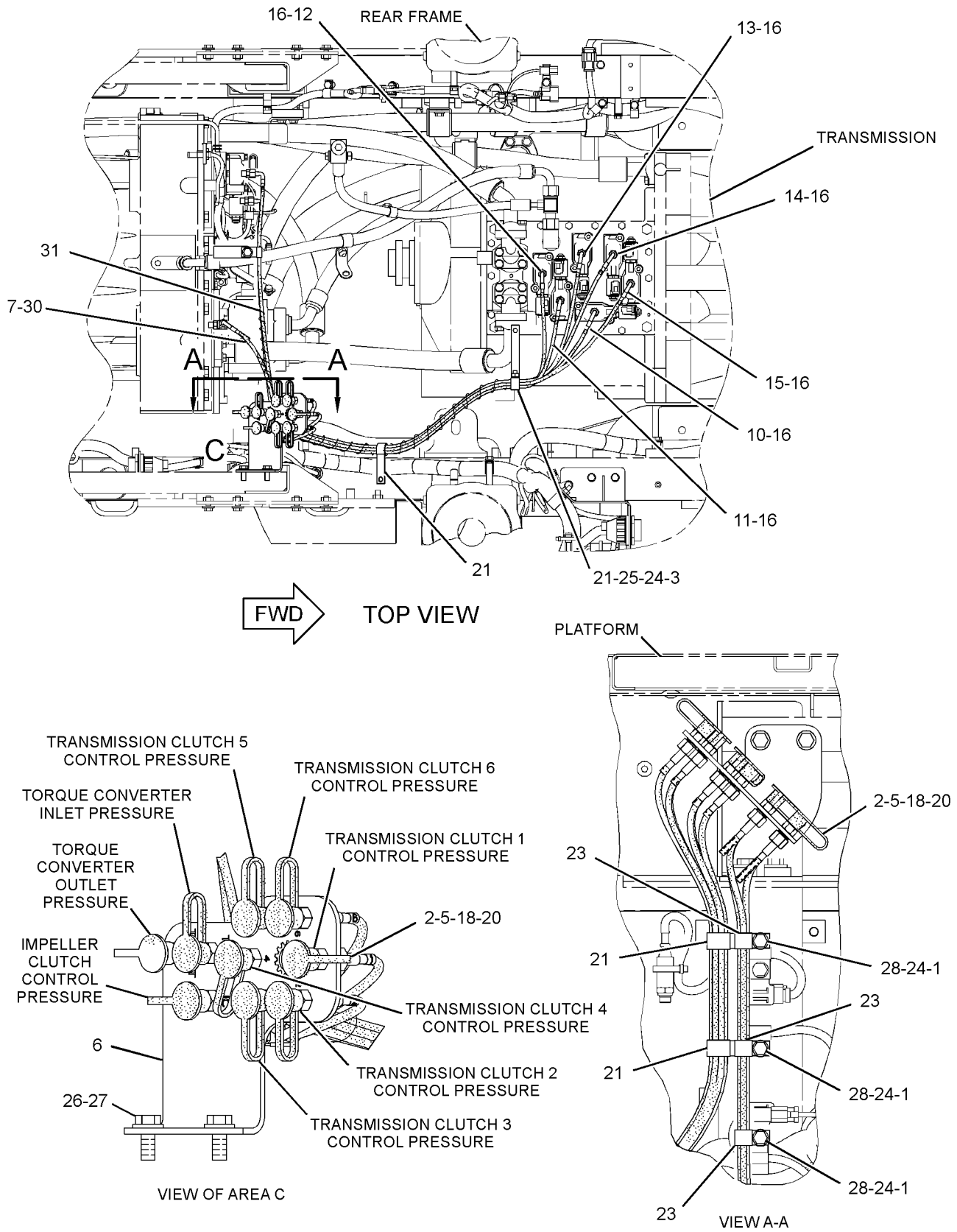

GRAPHIC #1 g02059413

311-7601 **LINES GP-DIAGNOSTIC** *(contd.)* **i03792776**

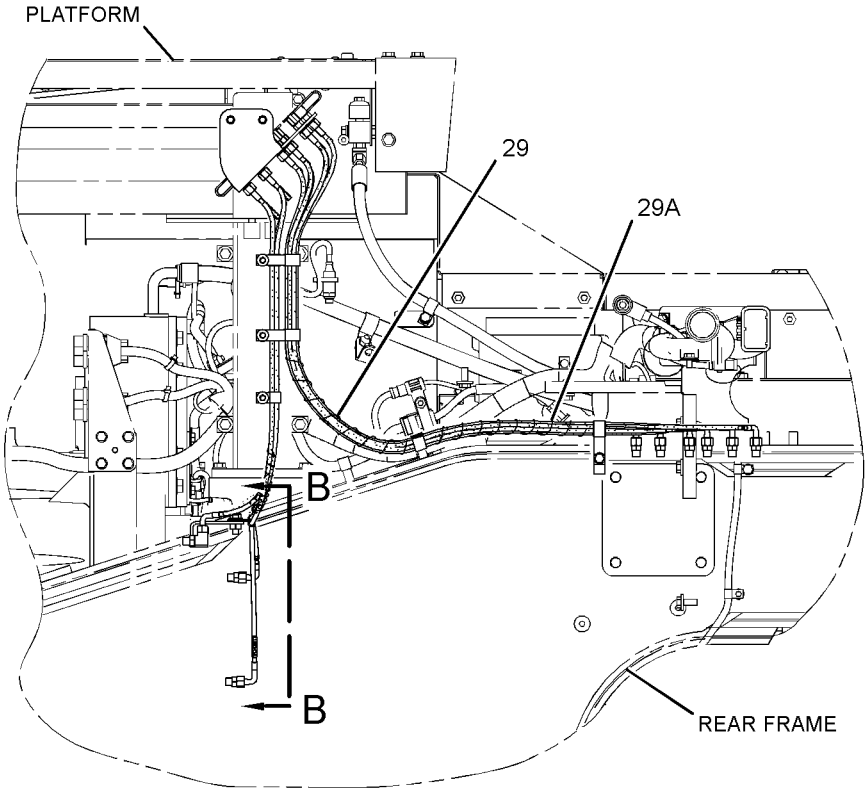

RIGHT SIDE VIEW

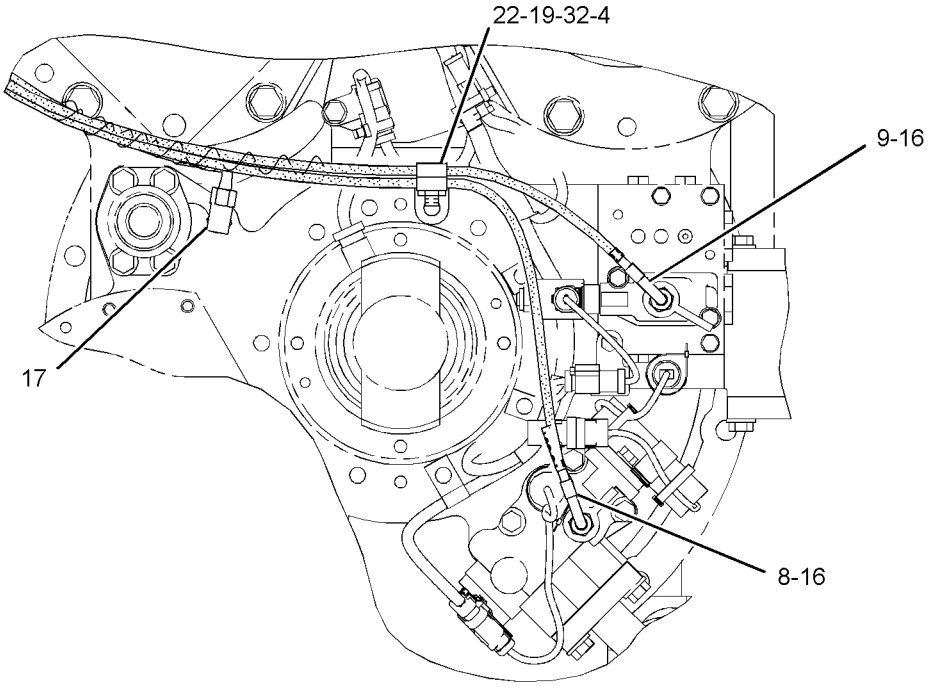

VIEW B-B

GRAPHIC #2 **<END>** g02059416

SERVICE EQUIPMENT AND SUPPLIES

204-4853 PLATE & FILM GP

S/N: BXY1-UP
PART OF 190-0948 COUPLER GP-QUICK
AN ATTACHMENT

SMCS-7405, 7557 **i03771912**

NOTE	REF NO	GRAPHIC REF	PART NUMBER	QTY	PART NAME 1 2 3 4 5 6 (PRODUCT LEVEL)	SEE PAGE
	1	1	**150-8896**	2	FILM-NOTICE (LIFT EYE LOCATION)	
	2	1	**157-2844**	2	FILM-WARNING (FLYING DEBRIS)	
	3	1	**159-8035**	4	FILM-WARNING (CRUSH HAZARD, STAY BACK)	
	4	1	**159-8036**	2	FILM-WARNING (READ OMM)	

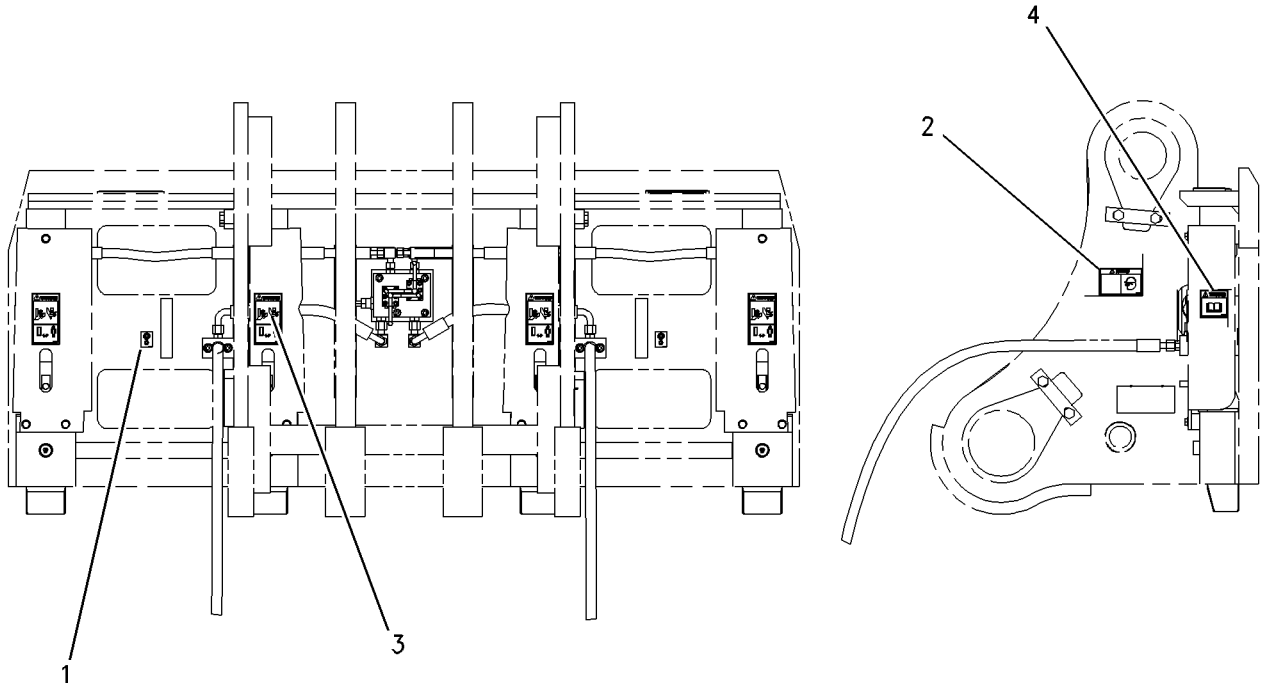

GRAPHIC #1 **<END>** g00839044

SERVICE EQUIPMENT AND SUPPLIES

233-8479 PLATE & FILM GP

S/N: BXY1-UP

PART OF 225-5432, 284-2735 CHASSIS AR

SMCS-7405, 7557 **i03621233**

NOTE	PART NUMBER	QTY	PART NAME 1 2 3 4 5 6 (PRODUCT LEVEL)	SEE PAGE
Y	*252-9667*	1	FILM GP	2065
			S/N: BXY1-1899	
Y	*291-5560*	1	FILM GP	2066
			S/N: BXY1900-UP	
	169-8373	1	BOTTLE GP-FLUID SAMPLING	
			(IN TRAY OF CAB AR (LEFT REAR OF CAB))	
	239-6986	1	PLATE-IDENTIFICATION (MACHINE)	
			(ON PLATE 60-MM FORWARD & 80-MM DOWN ON LH LOADER FRAME SIDE-PLATE)	
A	**3N-3790**	1	PLATE-SERIAL NUMBER (ENGINE)	
			(ON LOWER RH REAR CORNER OF CYLINDER BLOCK)	
	118-1225	1	FILM-IDENTIFICATION (TRANSMISSION TANK FILL CAP)	
			(ON TRANSMISSION OIL FILLER TUBE)	
	5P-1175	1	FILM-IDENTIFICATION (ENGINE OIL FILL)	
			(ON ENGINE OIL FILLER CAP)	
	334-4603		FILM-INFORMATION (HYDO ADVANCED 10)	
			(ON HYDRAULIC TANK BELOW FILL NECK)	
	134-7258	1	FILM-INFORMATION (EXTENDED LIFE COOLANT,READ OMM)	
			(ON UNDERSIDE OF RADIATOR FILL CAP ACCESS DOOR)	
	146-6747	1	FILM-INFORMATION (24-VOLT)	
			(ON UNDER SIDE OF BATTERY BOX DOOR)	
	237-0212	1	FILM-INFORMATION (ROPS, FOPS, READ OMM)	
			(ON LH REAR SURFACE OF CAB, BELOW WINDOW)	
	220-2782	1	FILM-INFORMATION (HYDRAULIC OIL LEVEL)	
			(TO THE RIGHT OF THE HYDRAULIC OIL SIGHT GAGE ON THE HYDRAULIC OIL TANK,	
			CENTERING MARKS WITH MIDDLE OPENING OF LIQUID LEVEL GAGE)	
	163-3119	1	FILM-INFORMATION (TRANSMISSION OIL LEVEL)	
			(ON PLATE NEAR TRANSMISSION SIGHT GAGE, ALIGN LOW LINE OF THE PLATE-IDENT WITH CENTERLINE OF THE VEHICLES DRIVESHAFT)	
	3E-1552	1	FILM-INSTRUCTION (TRANSMISSION FILTER)	
			(ON TRAMSMISSION OIL FILTER)	
	6V-2679	1	FILM-INSTRUCTION (WIPER)	
			(ON CAP OF WINDSHIELD WASHER BOTTLE LOCATED IN THE LH PLATFORM)	
	7X-3229	4	FILM-INSTRUCTION (LIFT EYE, TIE-DOWN LOCATION)	
			(ONE EACH AT FRONT, REAR LIFT & TIEDOWN EYES)	
	190-5386	2	FILM-STRIPE (ROUND RED REFLECTIVE)	
			(ON REAR OUTSIDE SURFACE OF BUMPER, 75-MM FROM EACH SIDE, CENTERED ON FLAT SURFACE)	
	8T-7038	1	FILM-WARNING (DO NOT LIFT)	
			(NEAR DRAW-BAR PIN)	
	219-0305	1	FILM-WARNING (NO WELD, NO DRILL, READ OMM)	
			(ON LH REAR SURFACE OF CAB, BELOW WINDOW)	

A-NOT PART OF THIS GROUP
Y-SEPARATE ILLUSTRATION

<END>

SERVICE EQUIPMENT AND SUPPLIES

236-0964 PLATE & FILM GP

S/N: BXY1-UP

PART OF 352-8266 CONVERSION AR-MACHINE

AN ATTACHMENT

SMCS-7405, 7557 **i03794605**

NOTE	PART NUMBER	QTY	PART NAME 1 2 3 4 5 6 (PRODUCT LEVEL)	SEE PAGE
	227-7391	1	FILM-WARNING (SEAT BELT, INTERNATIONAL)	
			(ON LEFT FRONT ROP TUBE)	
	225-0312	1	FILM-WARNING (JUMP START, READ OMM)	
			(ON UNDERSIDE OF BATTERY BOX DOOR)	
	225-4257	1	FILM-WARNING (HOT FLUID UNDER PRESS, INTL)	
			(ON UNDERSIDE OF RADIATOR FILL CAP ACCESS DOOR)	
	226-1240	2	FILM-WARNING (CRUSH HAZARD, STAY BACK, INTL)	
			(ON SIDE FACE OF LOADER FRAME ONE ON EACH SIDE)	
	226-1274	1	FILM-WARNING (CRUSH HAZARD, READ OMM, INTL)	
			(ON SIDE FACE OF LOADER FRAME SAME SIDE AS SAFETY BAR)	
	228-2616	1	FILM-WARNING (UNIVERSAL, READ OMM, INTL)	
			(IN CAB ON INSIDE OF FRONT DOOR POST)	
	236-7227	1	FILM-WARNING (PARKING BRAKE, INTERNATIONAL)	
			(ON CENTER OF RETAINING PLATE ON PARKING BRAKE GROUP)	
	260-7653	1	FILM-WARNING (PRODUCT LINK, READ OMM)	
			(INSIDE CAB ON LEFT FRONT METAL POST ("A" POST) 1200 MM ABOVE CAB FLOOR)	
	314-3986	2	FILM-WARNING (FALLING HAZARD, READ OMM)	
			(ON FRONT FENDER NEAR THE TOP - ONE ON EACH FENDER)	

<END>

SERVICE EQUIPMENT AND SUPPLIES

236-0966 PLATE & FILM GP

S/N: BXY1-UP

AN ATTACHMENT

SMCS-7405, 7557 **i03792940**

NOTE	PART NUMBER	QTY	PART NAME 1 2 3 4 5 6 (PRODUCT LEVEL)	SEE PAGE
	227-7390	1	FILM-WARNING (SEAT BELT)	
			(ON THE LEFT FRONT ROP TUBE)	
	225-0313	1	FILM-WARNING (JUMP START, READ OMM)	
			(ON UNDERSIDE OF BATTERY BOX DOOR)	
	225-4256	1	FILM-WARNING (HOT FLUID UNDER PRESSURE, U.S.)	
			(ON UNDERSIDE OF RADIATOR FILL CAP ACCESS DOOR)	
	226-1242	2	FILM-WARNING (CRUSH HAZARD, STAY BACK, U.S.)	
			(ON SIDE OF FACE OF LOADER FRAME ONE ON EACH SIDE)	
	226-1275	1	FILM-WARNING (CRUSH HAZARD, READ OMM, U.S.)	
			(ON SIDE OF FACE OF LOADER FRAME SAME SIDE AS SAFETY BAR)	
	228-2615	1	FILM-WARNING (UNIVERSAL, U.S.)	
			(IN CAB ON INSIDE OF FRONT DOOR POST)	
	236-7226	1	FILM-WARNING (PARK BRAKE, WHEEL CHOCK, U.S.)	
			(ON CENTER OF RETAINING PLATE ON PARKING BRAKE GROUP)	
	260-7652	1	FILM-WARNING (PRODUCT LINK 300, U.S.)	
			S/N: BXY4000-UP	
			(INSIDE CAB ON LEFT FRONT METAL POST ("A" POST) 1200 MM ABOVE CAB FLOOR)	
	314-3985	2	FILM-WARNING (FALLING HAZARD, READ OMM)	
			(ON FRONT FENDER NEAR THE TOP - ONE ON EACH FENDER)	
			<END>	

SERVICE EQUIPMENT AND SUPPLIES

224-3979 PLATE GP-ENGINE IDENTIFICATION

S/N: RHX1-3947

PART OF 225-6065, 225-6106 ENGINE AR-COMPLETE

AN ATTACHMENT

SMCS-7557 **i02682761**

NOTE	REF NO	GRAPHIC REF	PART NUMBER	QTY	PART NAME 1 2 3 4 5 6 (PRODUCT LEVEL)	SEE PAGE
	1	1	**229-5669**	1	PLATE-IDENTIFICATION (C18 ACERT)	
	2	1	**234-1400**	1	PLATE-IDENTIFICATION (BLANK)	
	3	1	**234-1401**	1	PLATE-IDENTIFICATION (CAT)	

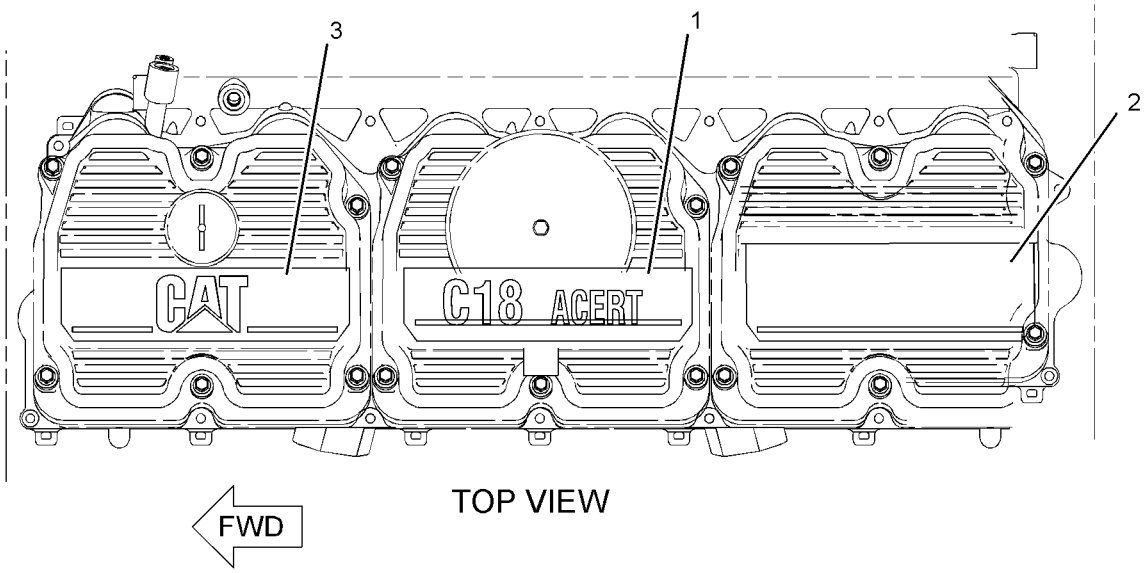

GRAPHIC #1 **<END>** g01348241

SERVICE EQUIPMENT AND SUPPLIES

1N-4296 PROTECTION GP-VANDALISM

S/N: BXY1-UP

CAP

PART OF 225-6709, 345-3936 LINES GP-POWER TRAIN OIL

SMCS-1273, 3005, 3030, 5056, 7315 **i02741391**

NOTE	REF NO	GRAPHIC REF	PART NUMBER	QTY	PART NAME 1 2 3 4 5 6 (PRODUCT LEVEL)	SEE PAGE
	1	1	**5P-8502**	1	PADLOCK GP	
		1	**5P-8500**	1	KEY	
		1	**8Y-6364**	1	SLEEVE	
	2	1	**8S-4212**	2	RIVET	
	3	1	**8S-3746**	2	COVER-FILLER CAP	
	4	1	**7W-1484**	1	CAP AS-OIL FILLER (POWER TRAIN)	
		1	**6H-0411**	1	WASHER (32.5X50.8X1.6-MM THK)	

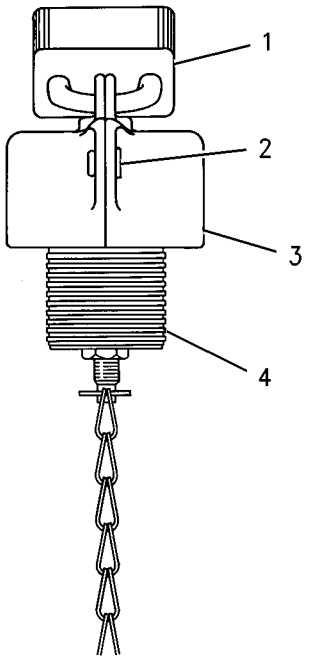

GRAPHIC #1 **<END>** g00775220

SERVICE EQUIPMENT AND SUPPLIES

4C-8195 TOOL GP-CONTROL SERVICE

S/N: BXY1-UP
FOR IMPLEMENT & POWER TRAIN CALIBRATION
PART OF 225-5432, 284-2735 CHASSIS AR

SMCS-0785 **i01346135**

NOTE	REF NO	GRAPHIC REF	PART NUMBER	QTY	PART NAME 1 2 3 4 5 6 (PRODUCT LEVEL)	SEE PAGE
	1	1	**170-3791**	1	COVER AS	
	2	1	**9X-2129**	6	SCREW-FLAT HEAD	
	3	1	**4C-8196**	1	CABLE AS	
	4	1	**9X-8917**	2	SCREW-MACHINE (4-40X9.52-MM)	
	5	1	**6B-4540**	2	NUT (4-40 THD)	
	6	1	**5S-4246**	2	LOCKWASHER	
	7	1	**4C-8197**	1	CABLE AS	
	8	1	**138-7795**	1	CABLE AS	

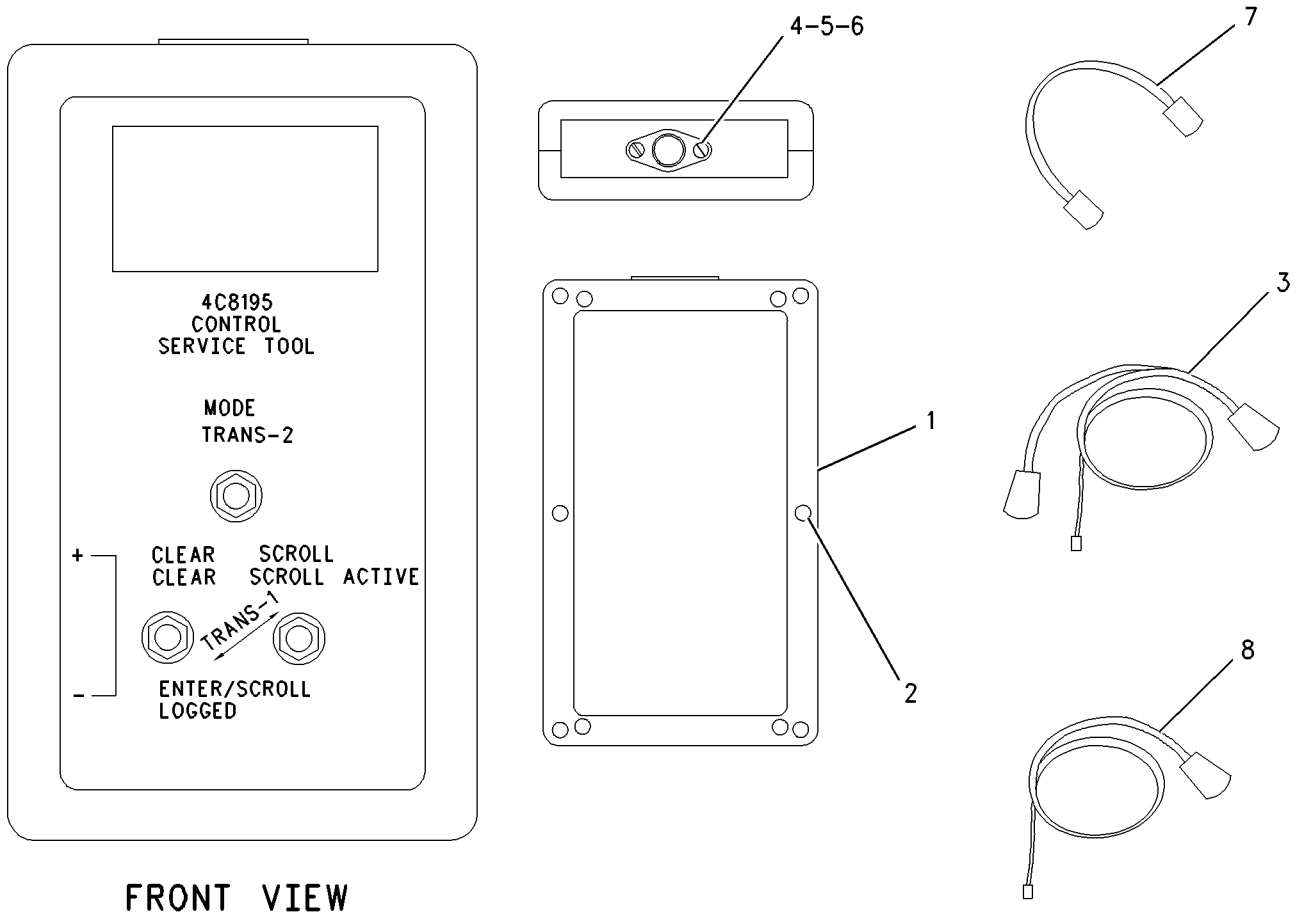

GRAPHIC #1 **<END>** g00712245

MEMORANDA

PART NUMBER INDEX

Part	Page
0	
0A-3721	1346
	1350
	1354
0L-1143	137
0L-1328	730
	734
0L-1351	149
	150
	151
	152
	179
	184
0L-1558	1278
0L-2061	860
	862
	867
0L-2070	93
	95
	179
	184
0L-2315	811
0S-0509	138
	601
	603
0S-0699	259
	260
0S-1571	85
	154
	254
0S-1576	601
	603
0S-1577	83
0S-1585	75
	727
0S-1587	107
	109
	679
	730
	734
0S-1588	40
	93
	95
	107
	111
	112
	114
	138
	139
	141
	143
	146
	147
	150
	151
	152
	199
	1174
	1176
0S-1590	78
	137
	139
	141
	143
0S-1591	149
	150
	151
	152
	154
	166
	179
	184
	187
	211
	250
	252
	410
	412
0S-1594	36
	37
	80
	88
	90
	97
	114
	138
	139
	141
	143
	146
	147
	203
	601
	603
	730
	734
	881
0S-1595	98
	1278
	1371
0S-1597	444
	449
0S-1608	106
	179
	184
0S-1617	812
0S-1619	88
	90
	113
	250
	252
	254
0S-1621	1278
0T-0055	40
	93
	95
	114
0T-0065	179
	184
	812
0T-0102	710
	727
0T-0244	1879
	1884
	1887
0T-0573	106
0T-0883	982
1	
1A-1135	187
1A-1460	730
	734
1A-2029	107
	109
	149
	150
	151
	179
	184
1A-2223	679
	837
	838
1A-3203	75
1A-4273	601
	603
1A-4790	1320
	1322
1A-5183	40
1A-5822	710
	1278
1A-5964	114
	250
1A-8651	730
	734
1B-0676	900
	902
	904
1B-2790	179
	184
1B-2886	1371
1B-3867	26
1B-3908	1373
1B-3909	1373
1B-3953	727
1B-3955	727
1B-4367	731
	734
1B-4971	1757
1B-5964	999
1B-7182	184
	187
1B-8705	85
1B-8736	824
1B-9575	295
1B-9920	900
	902
	904
1C-2251	211
1D-4327	846
	848
	850
	853
	856
1D-4566	179
	184
1D-4569	1278
1D-5117	279
	283
	482
1F-0750	138
	149
	150
	151
	211
	351
	370
	374
	378
	382
1F-1006	846
	848
	850
	853
	856
1F-1609	1475
	1481
	1488
	1495
1F-7958	81
	730
	734
1G-5928	1381
1G-8878	1440
1H-1023	444
	449
1H-2629	444
	449
1H-3244	276
	533
	541
	555
	568
	576
1H-3338	456
1H-4393	1274
1H-5728	1403
	1605
	1610
	1617
	1622
	1627
	1632
1H-6227	712
	766
	770
	1296
	1304
	1313
1H-7262	900
	902
	904
1H-7263	900
	902
	904
1H-7365	900
	902
	904
1H-7366	900
	902
	904
1H-8128	220
	221
	256
	318
1H-8171	1316
	1317
1H-8278	830

► **PRIMARY REFERENCE**

PART NUMBER INDEX

Part	Page
	832
1H-8306	267
	269
1H-8647	26
1H-9696	1566
	1569
1J-2919	1148
1J-4246	828
1J-5799	1899
1J-9671	147
	220
	221
	1272
	1273
	1590
	1595
1K-6853	677
1K-8850	1844
1L-3162	881
1L-3768	822
1L-5072	2062
1M-0644	157
1M-3909	824
1M-6119	279
	280
	283
	284
	287
1M-6120	279
	280
	283
	284
	287
1M-6298	1411
1M-6718	1387
1M-9968	445
	450
1M-9971	444
	449
1N-3974	77
1N-4296	777
	784
	791
	798
	805
	▶2092
1N-5410	812
1P-0014	812
1P-0810	520
1P-3702	1347
	1350
	1355
	1359
1P-3703	744
	748
	753
	757
	1347
	1351
	1355
	1359
1P-3704	744
	748
	753
	757
	1347
	1351
	1355
	1359
	1406
	1446
	1449
	1452
	1455
	1458
	1460
	1502
	1505
	1531
	1533
	1535
	1537
	1582
	1591
	1596
1P-3707	1515
	1523
1P-3709	1399
	1401
	1403
	1546
	1555
1P-3958	813
1P-4078	730
	734
1P-4079	730
1P-4082	730
1P-4278	190
	192
	194
	196
	234
	238
	242
	246
1P-4577	766
	770
	1338
	1342
1P-4578	766
	770
	824
	1296
1P-4579	778
	785
	792
	799
	806
	824
	1338
	1342
	1347
	1351
	1355
	1360
	1388
	1391
	1476
	1482
	1489
	1496
	1566
	1569
1P-4582	220
	221
	778
	785
	792
	799
	806
	1466
	1471
	1476
	1482
	1489
	1496
	1566
	1569
1P-4584	778
	785
	792
	799
	806
	1347
	1351
	1355
	1360
1P-5411	1411
1P-5412	1411
1P-5767	1347
	1351
	1355
	1360
	1406
	1446
	1449
	1452
	1455
	1458
	1460
	1502
	1505
	1531
	1533
	1614
1P-6356	1774
	1777
	1781
1P-7326	1729
1P-7346	85
1P-9261	812
1P-9269	730
	734
1R-0716	139
1R-0762	223
	225
	227
	229
1R-1052	1688
1R-1060	1688
1R-1808	141
	143
1R-5396	1993
1R-6072	479
	480
	482
1S-0994	280

▶ PRIMARY REFERENCE

PART NUMBER INDEX

Part	Page
	284
	482
	605
	608
	618
	625
	629
	637
	672
	778
	785
	999
	1046
	1050
	1056
	1062
	1064
	1067
	1084
	1092
	1097
	1100
	1105
	1109
	1113
	1118
	1122
	1126
	1131
	1134
	1286
	1347
	1351
	1355
	1360
	1733
	2075
	2078
1S-1015	999
1S-3889	887
1S-4295	215
	216
	217
1S-6420	1304
	1476
	1482
	1489
	2067
	2075
1S-6595	731
	735
1S-7251	279
	283
	287
	482
1S-7446	444
	449
1S-9540	53
	55
	57
1S-9593	533
	541
	879
	884
	1657

Part	Page
	1709
	1713
1S-9989	812
1T-0479	676
	677
1T-0720	402
	403
	404
1T-0765	259
	260
1T-0766	867
1T-0786	860
	862
	867
1T-0787	860
	862
	867
1T-0795	860
	862
	867
1T-0806	860
	862
	867
1T-0807	860
	862
	867
1T-0808	444
	449
1T-0847	862
1T-0887	862
1T-0895	862
1T-0896	862
	867
1T-0936	862
	1388
	1391
1T-1315	862
	867
1T-1356	862
1T-1401	860
	862
	867
1T-1426	862
	867
1T-1616	862
1T-1617	862
1T-1639	846
	848
	850
	853
	856
1T-1897	860
	862
	867
1U-0071	2001
1U-0322	1391
1U-0323	1391
1U-0761	1983
	2000
1U-1570	1566
	1569
1U-2827	735
	1566
	1569
1U-8846	679

Part	Page
	887
1V-0134	912
1V-1122	319
	1792
1V-1123	319
	1792
1V-6341	731
	735
1V-6755	1844
	1860
	1863
	1866
	1869
	1872
	1875
1V-8732	902
	1158
1W-3136	88
	90
1W-6137	147
1W-6448	410
	412
1W-7238	157
1W-7239	157
1Y-0413	1172
	1174
	1176
2	
2A-1162	88
	90
2A-1531	1278
2A-2677	522
2A-3630	1546
	1555
2A-4429	67
	68
	69
	71
2A-4639	730
	734
2B-0122	1527
	1529
2B-0941	582
	585
	589
	592
	598
	1346
	1350
	1354
	1359
2B-2404	727
2B-2695	38
	77
2C-9259	1944
	1946
	1948
	1952
	1954
	1956
	1958
	1960

Part	Page
	1962
	1965
	1967
	1969
	1972
	1974
	1977
	1979
	1980
2D-0388	525
	672
2D-4202	1566
	1569
2D-4867	1688
2D-6392	444
	449
2D-6533	677
2D-6642	811
2D-6648	1399
	1401
	1403
2D-8009	824
2D-8363	812
2D-8540	830
	832
2F-6678	445
	450
2G-0395	1694
	1695
2G-1133	1803
	1805
2G-3747	715
2G-8741	867
2G-8767	279
	283
	287
2H-2255	861
	862
	867
2H-2665	731
	735
	1278
2H-3429	444
	449
2H-3755	410
	412
2H-3920	470
	484
	491
	498
	508
	521
2H-3922	453
2H-3926	689
	694
	699
	744
	748
	753
	757
	764
	766
	770
2H-3932	712
2H-3933	730

► PRIMARY REFERENCE

PART NUMBER INDEX

Part	Page
	734
	830
	832
	1688
2H-6489	730
	734
2H-6490	730
	734
2H-9523	481
2H-9524	585
	589
	592
	598
2J-3118	85
2J-3507	1985
	1986
	1987
	1988
	1990
2J-6274	1605
	1610
	1617
	1622
	1627
	1632
2J-7761	2062
2J-8163	444
	449
2K-4472	727
	730
	734
2K-4821	276
2K-4973	152
	1691
	1903
2K-6830	1334
	1335
	1336
2L-5893	1854
2L-6679	444
	449
2L-8049	598
2L-8050	567
	575
2L-8054	520
	637
2L-8057	598
2L-8058	567
	575
2L-8061	520
	637
2L-8065	567
	575
2L-8066	511
	520
	521
2L-8067	567
	576
2L-8071	509
	511
	520
	521
	567
	576
	637

Part	Page
2L-8075	301
	567
	576
2L-8076	398
	400
	511
	519
	521
2L-8078	301
2L-8081	511
	519
	521
	567
	576
	637
2M-0849	1278
2M-4009	1709
	1713
2M-4287	826
2M-6102	477
	1833
	1834
	1835
2M-6835	1757
2M-9780	143
	234
	238
	242
	246
	319
	1160
	1331
	1386
	1388
	1476
	1482
	1489
	1496
	1539
	1541
	1551
	1553
	1590
	1595
	1618
	1622
	1627
	1632
	1646
	1651
	1655
2N-0822	727
2N-2766	210
	217
2N-3253	966
2N-3254	966
2N-3350	147
2P-1293	689
	694
	699
	744
	748
	753
	757
	764

Part	Page
	766
	770
	1471
	1476
	1482
	1489
	1496
2P-1314	209
2P-1974	106
2P-2772	88
	90
2P-2975	1642
	1643
	1644
	1645
	1647
	1648
2P-3205	107
	109
	157
2P-3760	139
	141
	143
	147
2P-3761	139
	141
	143
	147
2P-4301	139
	141
	143
2P-4304	139
	141
	143
2P-4305	139
	141
	143
2P-4470	860
	862
	867
2P-4538	881
2P-7214	250
	252
	254
2Q-3691	1167
2Q-8043	▶979
2Q-8722	▶6
2Q-8732	▶1702
2Q-8733	▶7
2Q-8737	▶1855
2Q-8744	▶8
2Q-8749	▶9
2Q-8752	▶10
2Q-8753	▶11
2R-0098	887
2R-0239	860
	862
	867
	1546
	1555
2R-1920	1673
	1674
	1675
	1676
	1677

Part	Page
	1678
2R-2376	1752
	1768
	1771
2R-6806	223
	225
	227
	229
	250
	252
	254
	257
2S-0795	179
	184
2S-1647	167
	170
	173
	176
	1062
	1064
	1067
	1084
	1131
2S-1654	940
2S-2596	1388
	1391
2S-2760	157
2S-3440	198
2S-3567	403
	404
2S-4078	618
	625
	629
	743
	747
	752
	756
	763
	1388
	1391
	1604
	1605
	1610
	1618
	1622
	1627
	1632
	1642
	1643
	1644
	1645
	1647
	1648
	1653
2S-5658	848
	850
	853
	856
2S-7905	157
2T-1051	774
2T-1925	1260
	1262
2T-2305	778
	785
	792

▶ PRIMARY REFERENCE

PART NUMBER INDEX

Part	Page
	799
	806
2T-2396	774
	1225
	1235
	1260
2T-3013	875
2T-3019	582
	585
	589
	592
	598
	641
	643
	647
	649
	651
2U-6826	1993
2U-7345	1391
2U-7354	1389
	1392
2V-0600	1466
	1471
2V-1771	280
	284
	482
2V-2043	155
	156
2V-3216	349
	353
	365
	370
	374
	379
	382
	387
	1697
2V-3726	1751
2V-4387	1729
2W-5568	778
	785
2W-7940	356
	369

3

Part	Page
3B-0623	59
	62
	65
3B-0645	59
	62
	65
3B-1915	107
	109
	601
	603
3B-4501	1697
3B-4607	1285
	1320
	1322
	1324
3B-4610	900
	902
	904
	906
	1751
3B-4615	982
3B-4617	900
	902
	904
3B-4632	1993
3B-4640	1324
3B-6487	774
	1134
	1179
	1233
	1238
3B-6493	1001
	1004
	1093
	1096
	1101
	1105
	1118
	1122
	1134
	1137
	1231
	1233
	1237
	1238
3B-6552	774
	1007
	1012
	1016
	1020
	1025
	1029
	1034
	1038
	1042
	1046
	1050
	1056
	1189
	1204
	1206
	1208
	1210
	1235
	1243
	1260
	1267
	1268
	1269
	1270
3B-7255	319
3B-7262	774
3B-7263	1001
	1004
	1134
	1225
	1231
	1235
	1237
	1260
3B-7285	997
	999
	1001
	1004
	1134
	1231
	1237
3B-7720	774
3B-7721	1007
	1012
	1016
	1020
	1025
	1029
	1078
	1096
	1105
	1109
	1118
	1122
	1126
3B-7733	209
	1231
3B-7896	1012
	1025
	1029
	1038
	1042
	1050
	1056
3B-8153	900
	902
	904
3B-8488	1267
	1268
	1269
3B-8489	830
	832
	836
	1001
	1004
	1007
	1012
	1016
	1020
	1025
	1029
	1034
	1038
	1042
	1046
	1050
	1056
	1070
	1074
	1078
	1092
	1096
	1100
	1105
	1109
	1113
	1118
	1122
	1126
	1137
	1145
	1178
	1241
	1242
	1244
	1257
	1258
	1259
	1269
	1270
	1271
	1688
	1993
3B-8686	1145
3B-8822	997
	999
	1225
	1235
	1260
3C-8388	1399
	1401
	1403
	1546
	1555
3D-0490	730
	734
3D-2435	541
	548
	554
	560
	566
	574
3D-2824	319
	452
	618
	625
	629
	688
	693
	698
	739
	743
	747
	748
	752
	753
	756
	757
	760
	763
	764
	766
	770
	777
	778
	784
	791
	798
	805
	806
	811
	877
	950
	1062
	1064
	1067
	1084

► **PRIMARY REFERENCE**

PART NUMBER INDEX

Part	Page
	1295
	1303
	1312
	1363
	1366
	1373
	1388
	1391
	1394
	1395
	1411
	1431
	1434
	1437
	1465
	1466
	1470
	1471
	1475
	1476
	1481
	1482
	1488
	1489
	1495
	1496
	1561
	1564
	1591
	1596
	1792
3D-4603	1547
	1555
3D-8317	882
	885
3D-9799	534
	542
	549
	555
	559
	560
	568
	576
3E-0109	484
	491
	498
	508
3E-0400	1697
3E-1552	2088
3E-2310	1285
	1320
	1475
	1482
	1489
	1496
3E-2333	657
	1084
	1131
	1322
3E-2338	719
3E-2345	1062
	1064
	1067
	1084
3E-3371	454

Part	Page
	458
	510
	520
	523
	613
	635
	637
	664
	667
	1320
	1709
	1713
	1803
	1805
3E-3377	510
	520
	613
	636
	637
	664
	667
3E-3383	498
	499
	508
	509
	523
	613
	636
	637
3E-3389	491
	498
	508
	509
	521
	523
	637
	1727
3E-3584	1616
3E-3805	1740
	1742
	1743
	1745
	1747
	1749
3E-4051	1774
	1777
	1781
3E-4052	1774
	1777
	1781
3E-4053	1774
	1777
	1781
3E-4057	1774
	1777
	1781
3E-4058	1774
	1777
	1781
3E-4304	1752
3E-4352	179
	184
3E-4367	519
	521
	1803

Part	Page
	1805
3E-5136	1803
	1805
3E-5165	1803
	1805
3E-5169	664
	666
	667
	672
3E-5239	533
	541
	548
	554
	559
	566
	574
3E-5464	1697
3E-5519	533
	541
	548
	559
	567
	575
3E-6328	▶275
	484
	491
	498
	508
	518
3E-6389	▶326
	484
	491
	498
	508
	518
3E-6753	167
	170
	173
	176
3E-6761	1370
3E-6772	70
	73
3E-6790	147
3E-6908	1729
3E-6909	234
	238
	242
	246
	1290
	1292
	1309
3E-7401	1470
3E-7771	445
	450
3E-7790	509
	510
3E-7996	485
	486
	492
	493
	510
3E-7998	510
3E-7999	510
3E-8008	134
3E-8020	1710

Part	Page
	1768
	1771
3E-8026	1483
	1490
	1497
3E-8027	1483
	1490
	1497
3E-8044	92
	93
3E-8048	414
3E-8320	279
	283
	482
3E-8557	519
	521
3E-8558	519
	1803
	1805
3E-8822	394
3E-8825	394
3E-9411	739
	760
	937
	1515
	1519
	1521
	1523
	1531
	1533
	1535
	1572
	1575
	1578
	1582
	1586
3E-9413	1869
3F-3442	811
3F-4479	885
3F-5792	730
	734
3F-9556	276
3G-0361	1566
	1569
3G-2683	1391
3G-4711	1899
3G-5003	1604
	1609
	1614
	1617
	1621
	1626
	1631
	1640
3G-8054	1507
3G-8057	1507
3G-8175	884
3G-8607	1294
	1302
	1311
3H-0110	710
3H-0761	88
	90
3H-2599	956
3H-3385	1610

▶ PRIMARY REFERENCE

PART NUMBER INDEX

Part	Page	Part	Page	Part	Page	Part	Page
	1622		1147		1578		1247
	1632		1172		1582		1249
3H-7654	1280		1174		1586		1250
	1281		1176		1591		1252
3H-8726	1411		1278		1595		1253
3J-0634	1546		1285		1596		1254
	1555		1286		1602		1255
3J-1907	139		1294		1604		1262
	141		1295		1609	3J-7352	77
	143		1303		1614	3J-7354	139
	198		1312		1617		141
	209		1320		1618		143
	223		1322		1621		167
	225		1324		1622		170
	227		1326		1626		171
	229		1338		1627		173
	231		1342		1631		176
	250		1346		1632		179
	252		1350		1640		184
	254		1354		1649		190
	427		1359		1650		192
	605		1363		1653		194
	608		1364		1993		196
	618		1366		2067		641
	625		1367		2072		643
	629		1376		2075		647
	637		1387		2078		649
	641		1388		2081		651
	643		1391		2084		688
	647		1399	3J-2903	1640		693
	649		1401	3J-3679	1590		698
	651		1403		1595		718
	657		1405	3J-3712	710		806
	680		1406	3J-4818	1758		846
	682		1431		1760		1172
	684		1434		1903		1174
	686		1437	3J-5389	1062		1176
	710		1439		1064		1276
	712		1440		1067		1294
	718		1441		1084		1302
	719		1465		1131		1311
	721		1466		1172		1388
	727		1470		1174		1391
	777		1471	3J-5390	1186		1466
	778		1475		1188		1471
	784		1476		1189		1476
	785		1477		1204		1481
	791		1481		1206		1482
	792		1482		1208		1488
	798		1488		1210		1489
	805		1489		1212		1495
	806		1495		1214		1496
	813		1496		1216		1542
	846		1505		1219		1543
	848		1507		1221		1546
	853		1509		1223		1551
	881		1511		1225		1553
	887		1513		1231		1556
	1080		1542		1233		1604
	1082		1543		1235		1605
	1084		1546		1237		1609
	1088		1556		1238		1610
	1090		1572		1239		1617
	1131		1573		1243		1618
	1134		1575		1245		1621

PART NUMBER INDEX

Part	Page
	1622
	1626
	1627
	1631
	1632
3J-9887	1841
3K-0360	170
	171
	173
	174
	176
	177
	179
	184
	223
	225
	227
	229
	234
	238
	242
	246
	250
	252
	254
	258
	319
	618
	625
	629
	637
	641
	643
	647
	649
	651
	739
	743
	747
	752
	756
	760
	763
	778
	785
	799
	806
	887
	1280
	1281
	1285
	1290
	1292
	1294
	1295
	1302
	1303
	1311
	1312
	1326
	1329
	1338
	1342
	1363
	1364
	1366
	1367
	1378
	1379
	1384
	1385
	1405
	1406
	1466
	1470
	1471
	1475
	1572
	1575
	1578
	1582
	1586
	1590
	1591
	1596
	1637
	1641
	1652
	1662
	1663
	1724
	1792
3K-0835	458
	1709
	1713
	1727
3K-2518	1278
3K-2556	1278
3K-4897	1890
	1894
3K-5178	512
	518
3K-6401	966
3K-7928	319
3K-8460	147
3K-8681	924
	926
3K-8782	534
	542
3K-9608	830
	832
3K-9770	1926
	1927
	1983
	1984
	1985
	1986
	1987
	1988
	1990
	1992
	2000
	2001
	2002
	2003
	2004
	2005
	2006
	2007
	2008
	2038
	2040
	2041
3L-3380	444
	449
3L-6513	595
	637
3L-7634	279
	283
	287
	482
3L-8187	672
	1172
	1174
	1176
3L-9409	727
3L-9410	727
3N-3763	445
	449
3N-3790	2088
3P-0650	147
3P-0747	824
3P-1155	410
	412
	1642
	1643
	1644
	1645
	1647
	1648
3P-1932	179
	184
	223
	225
	227
	229
3P-2404	778
	785
	792
	799
	1296
	1304
	1431
	1435
	1437
	1476
	1483
	1490
	1496
3P-2685	811
3P-2761	812
3P-2768	812
3P-2791	811
3P-2792	812
3P-2793	811
3P-2794	811
3P-2983	813
3P-3059	811
3P-3060	812
3P-3098	811
3P-3103	812
3P-3242	812
3P-3246	813
3P-3304	811
3P-3321	811
3P-3418	813
3P-3505	1278
3P-3635	811
3P-3735	812
3P-3743	812
3P-4050	812
3P-4051	811
3P-6061	727
3P-7447	812
3P-7489	812
3P-9658	727
3P-9900	1903
3R-8797	444
	449
3R-8801	445
	450
3R-9322	1844
3S-1262	1278
3S-1284	860
	862
	867
3S-1307	402
3S-1349	846
	848
	850
	853
	856
3S-2093	27
	30
	77
	167
	170
	173
	176
	223
	225
	227
	229
	279
	283
	287
	349
	365
	395
	397
	398
	441
	486
	492
	500
	509
	601
	603
	605
	682
	686
	1062
	1064
	1067
	1080
	1082
	1084
	1088
	1090
	1131

PART NUMBER INDEX

Part	Page
	1134
	1697
	1724
	1729
	1736
	1738
	1761
	1763
	1803
	1805
	1807
	1813
	1827
	1909
	1912
	1915
	1919
	1923
3S-2708	812
3S-6049	279
	283
3S-8664	1004
	1364
3S-8665	167
	170
	173
	176
	1118
	1122
	1126
3S-9643	179
	184
3T-0203	485
	492
	499
	510
	519
3T-0204	618
	625
	628
	636
3T-2511	535
3T-2662	534
	542
	549
	555
	560
	568
	576
3T-3159	1805
3T-3410	533
	541
3T-3412	485
	492
	499
	618
	625
3T-3418	444
	449
3T-3422	444
	449
3T-3423	444
	445
	449
	450
3T-3424	444
	445
	449
	450
3T-3434	444
	449
3T-4709	444
	449
3T-4710	444
	449
3T-4965	1475
	1481
	1488
	1495
3T-6175	730
	734
3T-6246	860
	862
	867
3T-6848	1475
3T-7138	812
3T-9494	444
	445
	449
	450
3T-9524	445
	449
3T-9525	444
	449
3T-9549	617
	624
	628
3V-2431	1413
	1415
	1417
	1419
3V-3263	1912
3V-4694	1761
3V-7476	1752
3V-7516	1141
	1143
3V-9538	763
3V-9862	1566
	1569
3W-6398	1906
3W-6399	1906
3W-9117	929
	932
4	
4B-0418	182
	724
4B-1240	534
	542
	549
	555
	560
	568
	576
4B-2049	445
	450
	486
	493
	500
	512
	522
4B-2913	1320
	1322
4B-4043	88
	90
4B-4158	1278
	1391
	1546
	1604
	1609
	1614
	1617
	1621
	1631
4B-4274	534
	542
	549
	560
	1276
	1735
4B-4276	533
	541
	1899
4B-4278	1903
4B-4550	966
4B-4863	534
	542
	549
	555
	559
	560
	568
	576
4B-8440	1145
4B-9373	712
4B-9374	712
4B-9782	121
	123
	124
	125
	129
	131
	1388
	1391
4B-9784	1331
4B-9880	882
	885
4C-8195	1
	2
	►2093
4C-8196	2093
4C-8197	2093
4D-3704	83
4D-6293	212
4D-6473	730
	734
4D-7388	167
	170
	173
	176
	313
	315
	317
	582
	585
	589
	592
	598
	618
	625
	629
	637
	806
4D-7735	595
	659
	660
	1080
	1082
	1088
	1090
4D-7794	618
	625
	629
	637
	659
	660
	997
	999
	1001
	1004
	1007
	1012
	1016
	1020
	1025
	1029
	1034
	1038
	1042
	1046
	1050
	1056
	1062
	1064
	1067
	1070
	1074
	1078
	1080
	1082
	1085
	1088
	1090
	1092
	1096
	1100
	1105
	1109
	1113
	1118
	1122
	1126
	1131
	1134
	1729
4D-8123	592
	598
	605

► PRIMARY REFERENCE

PART NUMBER INDEX

Part	Page
	608
	669
	670
	1070
	1074
	1078
4D-8148	837
	838
4D-9517	234
	238
	242
	246
4E-0019	192
	929
	932
	947
4E-1384	982
4E-1966	712
4E-3447	1465
4E-3601	712
4E-4450	1751
4E-5542	1294
4E-5591	926
	1958
	1960
	1969
	1980
4E-5609	1688
4E-6015	1148
4E-6335	1899
4E-6439	1899
4E-6444	1899
4E-6445	1899
4E-6446	1899
4E-6523	1890
	1894
	1899
4E-6526	1890
4E-6578	982
4E-7163	1899
4E-7498	370
	374
	378
	382
	386
4E-7499	370
	374
	378
	382
	386
4E-7520	1726
4E-7627	1726
4E-7628	1726
4E-8266	559
4E-8413	1702
	1703
	1704
	1705
	▶1726
4E-8557	1729
4E-8560	1729
4E-8561	1729
4E-8583	1278
4E-8722	1716
	1718
	1890
	1894
	1899
4E-8852	982
	991
4E-8892	982
	991
4E-8975	390
	391
4E-8976	390
	391
4E-9173	1890
	1894
	1899
4E-9174	1890
	1894
	1899
4E-9271	167
4E-9609	351
	370
	374
	378
	382
4E-9664	1274
	1276
4E-9667	1283
4E-9668	1283
4E-9924	390
	391
	392
4E-9925	390
	391
	392
4F-0411	179
	184
4F-2294	457
4F-2320	1698
4F-3508	234
4F-4879	1888
	1889
4F-6568	1332
	1333
4F-7507	1688
4F-7957	26
	27
	29
	30
	31
	32
4H-1225	1162
	1163
	1313
4H-6112	777
	784
	791
	798
	805
4H-6141	850
	856
4H-6730	846
	848
	850
	853
	856
4I-3398	929
	932
4I-6287	1993
4I-6289	929
	932
4I-7077	929
	932
4J-0520	739
	760
	766
	770
	1131
	1296
	1304
	1313
	1338
	1342
	1406
	1472
	1476
	1483
	1490
	1497
4J-0521	1338
	1342
4J-0522	739
	744
	748
	753
	757
	760
	764
	766
	770
	778
	785
	792
	799
	806
	1296
	1304
	1313
	1385
	1466
	1472
	1641
	1652
	1653
4J-0523	1605
	1610
	1618
	1622
	1627
	1632
4J-0524	778
	785
	792
	799
	806
	1338
	1342
	1347
	1351
	1355
	1360
	1476
	1483
	1490
	1497
4J-0525	1592
	1605
	1618
	1627
4J-0527	220
	221
	778
	785
	792
	799
	806
	1466
	1472
	1476
	1483
	1490
	1497
	1566
	1569
	1572
	1575
	1578
	1582
	1586
	1592
	1596
	1640
4J-2677	134
4J-5267	739
	760
	1290
	1292
	1347
	1351
	1355
	1360
	1466
	1472
4J-5309	1546
	1556
	1618
	1622
	1627
	1632
4J-5477	167
	170
	171
	173
	174
	176
	177
	190
	192
	194
	196
	777
	784
	999
	1004
	1092
	1093
	1096

▶ PRIMARY REFERENCE

PART NUMBER INDEX

Part	Page
	1100
	1101
	1105
	1109
	1113
	1114
	1118
	1122
	1126
	1134
	1139
	1141
	1143
	1180
	1183
	1197
	1230
	1257
	1258
	1259
	2067
	2072
	2075
	2078
	2081
	2084
4J-6304	763
4J-6306	763
4J-7533	1328
	1604
	1605
	1609
	1610
	1617
	1621
	1626
	1631
	1653
4J-8224	1388
	1391
4K-3026	1004
	1007
	1012
	1016
	1020
	1025
	1029
	1034
	1038
	1042
	1046
	1050
	1056
	1070
	1074
	1078
	1092
	1096
	1100
	1105
	1109
	1113
	1118
	1122
	1126

Part	Page
	1137
	1139
	1186
	1188
	1212
	1214
	1216
	1219
	1247
	1249
	1257
	1258
	1259
4K-5122	534
	542
4K-6066	739
	760
4K-8302	1774
	1777
	1781
4K-8501	1844
4K-8864	351
	363
	370
	374
	379
	382
	387
	605
	618
	625
	629
	637
4K-9097	211
4K-9429	1823
	1824
	1826
4L-2729	445
	450
4L-6454	182
	582
	585
	589
	592
4L-7124	533
	541
4L-9337	153
	223
	225
	227
4M-0189	1566
	1569
4M-1827	444
4M-1828	444
4M-1831	444
	449
4M-1853	444
	449
4M-1854	444
	449
4M-1896	445
	450
4M-2381	882
	885
4M-5905	882

Part	Page
	885
4M-6425	1854
4M-8239	881
4M-8973	1007
	1012
	1016
	1020
	1025
	1029
	1034
	1038
	1042
	1046
	1050
	1056
	1070
	1074
	1078
	1092
	1096
	1100
	1105
	1109
	1113
	1118
	1122
	1126
	1186
	1188
	1212
	1214
	1216
	1219
	1221
	1223
	1225
	1231
	1233
	1235
	1237
	1238
	1239
	1245
	1247
	1249
	1250
	1252
	1253
	1254
	1255
	1260
	1262
	1263
	1270
	1271
4N-0683	53
	55
	57
4N-0684	47
4N-0699	36
4N-0826	147
4N-0827	139
	141
4N-0913	149
	150

Part	Page
	151
4N-0914	149
	150
	151
4N-0933	88
4N-0952	826
4N-1059	443
	447
	448
4N-1151	107
4N-1156	179
	184
4N-1199	179
	184
4N-1216	147
4N-1294	146
4N-1650	53
	55
	57
4N-2481	13
	15
	17
	▶137
4N-2514	83
4N-3841	184
4N-8150	139
	141
	143
	147
4N-8227	321
4P-0519	107
	109
4P-2383	189
4P-4278	121
4P-4279	121
4P-4460	153
	154
4P-6817	13
	15
	17
	▶83
4P-6818	83
4P-6846	13
	15
	17
	▶80
4P-7371	121
4P-7373	149
	150
	151
	152
4P-7429	601
	603
4P-7581	223
	225
	227
	229
	254
	486
	493
	500
	512
	518
	534
	542

▶ PRIMARY REFERENCE

PART NUMBER INDEX

Part	Page
	549
	555
	560
	568
	576
	582
	585
	589
	592
	598
	601
	603
	641
	643
	647
	649
	651
	1754
	1897
	1898
4P-7582	582
	585
	589
	592
	599
	601
4P-7882	134
4P-8134	486
	493
	500
	512
	518
	534
	542
	549
	555
	559
	561
	568
	576
	582
	585
	589
	592
	599
	601
	603
4P-9131	149
	150
	151
4S-1962	280
	284
	288
	482
	582
	585
	589
	592
	599
	605
	618
	625
	662
	663
	1007
	1012
	1016
	1020
	1025
	1029
	1062
	1064
	1067
	1078
	1096
	1105
	1109
4S-4455	585
	589
	592
	599
	629
	637
	641
	643
	647
	649
	651
	744
	748
	753
	757
	764
	1411
4S-5565	1413
	1415
	1417
	1419
4S-8537	811
	812
4S-8598	731
	735
4S-8603	731
	735
4S-8875	1411
4T-0925	1387
4T-0928	1387
4T-1701	1653
4T-1860	►1387
	1388
	1391
	1604
	1609
	1617
	1621
	1626
	1631
4T-2741	1329
4T-2770	1385
	1641
	1652
4T-4934	►1329
	1330
4T-5071	1602
4T-5896	►1602
	1604
	1609
4T-6617	1985
	1986
	1987
	1988
	1990
4T-7571	1329
4T-8698	1566
	1569
4T-8761	1371
4T-9298	1371
4T-9300	1371
4T-9301	1371
4T-9905	1331
4V-1074	912
4V-1541	1320
	1322
4V-1939	529
	628
	635
	659
	660
	670
4V-4164	484
	491
	498
	508
	518
4V-8256	1691
4V-8577	1903
4V-9803	982
	1164
4W-5698	47
4W-5699	47
4W-5700	47
4W-5701	47
4W-9160	209
4W-9890	36
4Y-5812	1385
	1641
	1652
4Z-6480	1330
5	
5A-3604	1546
	1556
5B-0651	1145
5B-2638	179
	184
5B-3180	882
	885
5B-9192	1758
	1760
5C-2873	1370
5C-2874	370
	374
	379
	382
	387
	1709
	1713
	1758
	1760
5C-2890	280
	284
	288
	370
	374
	379
	382
	387
	390
	391
	392
	454
	456
	486
	493
	500
	512
	522
	534
	542
	555
	568
	576
	909
	997
	999
	1001
	1004
	1007
	1012
	1016
	1020
	1025
	1029
	1078
	1096
	1105
	1109
	1118
	1122
	1126
	1284
	1710
	1713
	1734
	1743
	1745
	1747
	1749
	1903
5C-7261	333
	334
	349
	351
	353
	355
	356
	370
	374
	379
	382
	406
	407
	408
	409
	454
	472
	486
	493

► PRIMARY REFERENCE

PART NUMBER INDEX

Part	Page
	500
	512
	522
	953
	982
	987
	989
	994
	997
	999
	1729
	1754
	1790
	1794
	1795
	1890
	1894
	1899
5C-7423	1729
5C-8312	486
	493
	500
	512
	522
5C-8964	370
	374
	378
	382
	386
5C-9029	370
	374
	378
	382
	386
5C-9553	267
	269
	349
	353
	365
	408
	409
	518
	662
	663
	943
	945
	947
	953
	1697
	1729
	1909
	1912
	1915
	1919
	1923
5D-1911	2062
5D-5957	850
	856
5D-6298	887
5D-9231	209
5D-9629	395
	398
	400
	1860
	1863
	1872
	1875
5E-8771	85
5F-0149	731
	735
5F-0304	88
	90
5F-1678	887
5F-3106	1338
	1342
	1347
	1351
	1355
	1360
5F-8000	730
5F-9035	1394
5F-9144	231
	721
	1439
	1440
	1441
5G-6505	284
	482
5G-6787	1838
5G-7398	1906
5G-7817	234
	238
	242
	246
5H-1472	1602
5H-1504	70
	73
5H-4020	1466
	1472
5H-6005	1399
	1401
	1403
5H-6555	454
5H-6734	220
	221
	256
	318
5H-8848	1546
5I-4200	2075
	2078
	2081
	2084
5J-1086	712
	730
	734
5J-3419	1391
5J-4776	1388
	1391
5J-5314	444
	449
5J-5794	82
	812
5K-1094	1724
5K-1770	318
5K-2298	1001
	1004
5K-3294	641
	643
	647
	649
	651
5K-3661	712
5K-3968	830
	832
5K-5338	1483
	1490
	1497
	1507
5K-5959	1688
5K-7696	887
5K-8451	1004
5K-9065	846
	848
	850
	853
	856
5K-9090	155
	156
	688
	693
	698
	1347
	1351
	1355
	1360
	1405
	1406
	1431
	1434
	1437
	1465
	1466
	1470
	1471
	1476
	1483
	1490
	1497
	1572
	1575
	1578
	1582
	1586
	1592
	1596
5K-9242	1001
	1004
	1139
	1141
	1143
	1145
5K-9243	727
	1001
	1004
	1007
	1012
	1016
	1020
	1025
	1029
	1034
	1038
	1042
	1046
	1050
	1056
	1080
	1082
	1088
	1090
	1137
	1139
	1141
	1143
5K-9660	662
	663
5K-9979	997
	999
	1001
	1004
	1062
	1064
	1067
	1070
	1074
	1078
	1084
	1131
	1134
5L-3708	295
	296
5L-5502	1172
	1174
5L-8957	152
5M-2054	812
5M-2057	735
	1566
	1569
5M-2894	36
	37
	40
	78
	80
	88
	90
	93
	95
	97
	106
	107
	109
	111
	113
	114
	137
	138
	139
	141
	143
	146
	147
	149
	150
	151
	153
	154
	157
	179
	184
	199

► PRIMARY REFERENCE

PART NUMBER INDEX

Part	Page
	203
	211
	250
	252
	254
	259
	260
	402
	403
	404
	410
	412
	601
	603
	727
	730
	734
	812
	881
	1854
5M-3034	444
	449
5M-3062	319
	351
	370
	374
	379
	382
	582
	585
	589
	592
	595
	599
	1272
	1273
	1397
	1398
5M-3154	731
	735
5M-6126	812
5M-6187	811
5M-6213	88
	90
	710
	724
5M-6214	1233
	1238
5M-6592	712
5M-6755	1274
	1276
5M-7925	812
5M-9548	881
5M-9622	881
5M-9623	881
5M-9624	881
5P-0049	1502
	1505
5P-0403	812
5P-0537	27
	29
	30
	31
	32
	344
	1825
	1826
5P-0597	204
	777
	784
	791
	798
	805
5P-0747	279
	283
5P-0761	279
	283
5P-0763	136
5P-0765	510
5P-0767	319
	1792
	1795
5P-0840	53
	55
	57
	70
	73
5P-1075	351
	370
	374
	379
	382
5P-1076	167
	170
	173
	176
	190
	192
	194
	196
	199
	205
	206
	278
	313
	315
	317
	689
	694
	699
	740
	764
	891
	892
	893
	895
	897
	899
	943
	945
	947
	950
	968
	971
	974
	980
	982
	987
	989
	991
	993
	994
	996
	1007
	1012
	1016
	1020
	1025
	1029
	1034
	1038
	1042
	1046
	1050
	1056
	1070
	1074
	1078
	1092
	1096
	1100
	1105
	1109
	1113
	1118
	1122
	1126
	1137
	1158
	1472
	1515
	1519
	1521
	1523
	1527
	1529
	1531
	1533
	1535
	1542
	1543
	1572
	1575
	1578
	1582
	1586
	1592
	1597
	1774
	1777
	1781
	1785
	1838
	1841
5P-1175	2088
5P-1251	168
	170
	173
5P-1259	167
	170
	173
5P-1265	167
	170
	173
5P-1291	777
	784
	791
	798
5P-1404	238
	242
	246
5P-1506	612
5P-1838	319
5P-2199	1388
	1539
5P-2228	167
	170
	173
	176
	982
5P-2369	145
	766
	770
5P-2503	846
	848
	850
	853
	856
5P-2504	846
	848
	850
	853
	856
5P-2525	966
5P-2587	679
	730
	734
5P-2618	220
	221
5P-2673	966
5P-3422	1001
	1004
	1007
	1012
	1016
	1020
	1025
	1029
	1034
	1038
	1042
	1046
	1050
	1056
	1070
	1074
	1078
	1092
	1096
	1100
	1105
	1109
	1113
	1118
	1122
	1179
	1241
	1242

PART NUMBER INDEX

Part	Page
	1244
	1257
	1258
	1259
	1267
	1268
	1269
	1270
	1271
5P-3928	1788
	1790
5P-3929	1774
	1777
	1781
	1785
5P-3948	1774
	1777
	1781
	1785
5P-3961	213
5P-4106	1788
	1790
5P-4115	280
	284
	288
	534
	542
	662
	663
	909
	943
	945
	947
	1697
	1743
	1745
	1747
	1749
	1819
5P-4116	486
	493
	500
	512
	523
	597
	689
	694
	699
	850
	856
	982
	1592
	1597
	1736
	1738
	1771
5P-4142	85
5P-4255	93
	95
5P-4295	689
	1338
	1788
5P-4423	1692
	1903
5P-4432	1692
5P-4484	676
	677
5P-4571	378
	379
	386
	510
	511
	519
5P-5618	511
	519
5P-5637	1768
	1771
5P-5639	689
	694
	699
5P-5677	1679
	1680
	1682
	1683
	1684
	1685
	1729
5P-5678	27
	31
5P-5755	190
	192
	194
	196
	689
	694
	699
	704
	706
	708
5P-5768	1866
5P-5777	1295
	1326
5P-5908	1698
5P-6006	510
	520
	521
5P-6008	628
	635
	1285
5P-6010	1903
5P-6298	444
	449
5P-6604	676
	677
5P-6718	680
	682
	684
	686
5P-6724	1320
	1322
	1324
5P-6879	1798
	1799
5P-6944	618
	625
	629
	637
	806
5P-7068	826
5P-7211	159
	160
	190
	192
	194
	196
	943
	945
	947
5P-7462	232
	234
	238
	242
	246
	256
	280
	284
	288
	739
	760
	1509
	1511
	1513
5P-7463	232
	234
	238
	242
	246
	256
	280
	284
	288
	739
	760
	1509
	1511
	1513
5P-7464	778
	785
	792
	799
	806
	1001
	1004
	1062
	1064
	1067
	1080
	1082
	1085
	1088
	1090
	1132
	1406
5P-7466	1355
	1360
5P-7467	1355
	1360
5P-7468	739
	760
	778
	785
	792
	799
	806
	982
	1062
	1064
	1067
	1085
	1338
	1342
	1358
	1406
	1437
5P-7469	739
	760
	778
	785
	792
	799
	806
	982
	1062
	1064
	1067
	1085
	1338
	1342
	1358
	1406
	1437
5P-7470	748
	778
	785
	792
	799
	806
	1296
	1304
	1313
	1476
	1483
	1490
	1497
5P-7471	748
	778
	785
	792
	799
	806
	1296
	1304
	1313

► **PRIMARY REFERENCE**

PART NUMBER INDEX

Part	Page
	1476
	1483
	1490
	1497
5P-7483	909
	1158
5P-7701	107
	689
	694
	699
	723
5P-7703	1347
	1351
	1355
	1360
	1476
	1483
	1490
	1497
5P-7803	1740
	1742
	1743
	1745
	1747
	1749
5P-7854	618
	625
	629
	637
	1118
	1122
	1126
	1476
	1483
	1490
	1497
5P-7957	1823
	1824
5P-7958	2
	484
	491
	498
	508
	522
	1768
	1796
5P-8068	147
5P-8077	1406
	1446
	1449
	1452
	1455
	1458
	1460
	1466
	1472
	1502
	1505
	1515
	1519
	1521
	1523
	1525
	1526
	1531
	1533
	1535
	1537
	1573
	1575
	1578
	1582
	1586
	1592
	1597
	1610
	1614
	1622
	1632
5P-8112	1355
	1360
5P-8119	1280
	1281
	1316
	1317
5P-8136	1985
	1986
	1987
	1988
	1990
5P-8182	748
	778
	785
	792
	799
	806
	1296
	1304
	1313
5P-8245	81
	88
	90
	98
	135
	647
	649
	651
	679
	710
	712
	727
	730
	734
	812
	830
	832
	860
	862
	867
	966
	1546
	1556
	1566
	1569
5P-8247	88
	90
	276
	291
	601
	603
	714
	716
	730
	734
	966
5P-8248	712
5P-8250	1985
	1986
	1987
	1988
	1990
5P-8309	1890
5P-8347	337
	338
5P-8356	1381
5P-8361	1926
	1927
	2040
	2041
5P-8362	1926
	1927
	1986
	1988
	1990
	2040
	2041
5P-8439	349
	353
	365
5P-8444	778
	785
	792
	799
	806
	1338
	1342
	1358
	1406
	1437
5P-8500	2
	902
	974
	1796
	2062
	2092
5P-8502	2092
5P-8823	1985
	1987
	2000
	2038
5P-8874	1295
	1303
	1312
	1338
	1342
5P-8939	280
	284
	288
	482
5P-9085	353
	361
	362
	473
	477
	481
	529
	582
	585
	589
	592
	599
	605
	608
	618
	625
	629
	637
	659
	660
	669
	670
	680
	684
	766
	770
	774
	1286
	1406
	1912
5P-9119	1569
5P-9132	1721
5P-9186	1373
5P-9262	1638
5P-9297	292
	294
	351
	363
	370
	374
	379
	382
	387
	657
	1007
	1012
	1016
	1020
	1025
	1029
	1034
	1038
	1042
	1046
	1050
	1056
	1070
	1074
	1092
	1096
	1100
	1105
	1118
	1122
	1132
	1134
	1424
	1426
	1509
	1511
	1513

PART NUMBER INDEX

Part	Page
	1909
5P-9299	146
	618
	625
	629
	1406
5P-9769	966
5R-4373	840
5S-0085	677
5S-0581	187
5S-4245	486
	493
	500
	512
	522
5S-4246	1727
	2093
5S-7001	1386
5S-7018	1386
5S-7349	276
5S-7383	153
	234
	238
	242
	246
	1854
5T-5009	1188
	1216
	1219
	1221
	1231
	▶1264
5T-5012	1186
	1188
	1189
	1204
	1206
	1208
	1210
	1212
	1214
	1216
	1219
	1221
	1223
	1225
	1231
	1233
5T-5045	1264
	1265
	1266
5T-7676	887
5T-8224	1525
	1526
	1537
5T-9020	499
	509
	522
5T-9813	1285
5T-9996	1263
5V-1496	1880
	1882
	1885
5V-3854	968
	971
	974
5V-5476	1137
	1139
5V-6152	605
	608
	612
5V-6153	605
	608
	612
5V-9221	617
	624
6	
6A-5591	710
6B-0689	76
6B-4540	486
	493
	500
	512
	522
	2093
6B-4852	712
6B-5072	1172
	1174
	1176
6B-6205	167
	170
	173
	176
	617
	624
	628
	638
	968
	971
	974
	1062
	1064
	1067
	1084
	2067
	2072
	2075
	2078
	2081
	2084
6B-6684	1566
6B-6863	812
6B-8085	989
6C-3060	267
	269
6C-6739	1664
	1665
6D-0692	887
6D-1004	744
	748
	753
	757
	764
6D-1641	284
	288
	319
	1062
	1064
	1067
	1085
	1132
	1774
	1792
6D-3479	167
	170
	173
	176
	190
	192
	194
	196
	605
	608
	618
	625
	629
	638
6D-4244	582
	585
	589
	592
	599
	619
	625
	629
	638
	1113
	1118
	1122
	1126
6D-4246	280
	531
	618
	625
	629
	662
	663
	1313
	1342
	1367
	1424
	1426
	1466
	1472
	1564
	2067
6D-4247	1085
	1132
	1724
6D-4636	597
	629
	638
	1296
	1304
	1313
	1483
	1490
	1497
6D-5256	1733
6D-5729	1857
6D-6146	486
	493
	500
	512
	522
6D-7128	182
6D-7889	641
	643
	647
	649
	680
	682
	684
	686
	850
	853
	856
	876
6E-0381	1378
	1379
6E-0410	1388
	1539
6E-0496	1413
	1415
	1417
	1419
	1422
	1423
	1428
	1430
6E-0763	1381
6E-0770	1382
6E-0923	1899
6E-1127	1385
	1641
	1652
6E-1291	1604
	1609
	1617
	1621
	1626
	1631
6E-1454	1475
	1481
	1488
	1495
6E-1835	1329
6E-2140	1618
	1622
	1626
	1631
6E-2943	1371
6E-3269	1638
6E-3272	1638
6E-3273	1638
6E-3276	1638
6E-3303	1653
6E-3767	1381
6E-3769	1381
6E-3775	1388
	1391
6E-3779	1388
	1391
6E-3780	1391
6E-3985	1355
6E-3986	▶1384
	1392

▶ PRIMARY REFERENCE

PART NUMBER INDEX

Part	Page
6E-4286	1388
	1392
	1609
	1618
	1622
	1626
	1631
6E-4287	1389
	1392
	1618
	1622
	1627
6E-4288	1355
6E-4499	1388
	1391
6E-4500	1388
	1392
6E-4513	1388
	1391
6E-4514	1388
	1391
6E-4753	1384
6E-5444	1285
6E-5510	1385
	1641
	1652
6E-5566	1338
	1342
	▶1386
6E-6138	1385
	1641
	1652
6E-6188	▶1385
	1388
	1391
6E-6527	1638
6E-6528	1638
6E-6536	1638
6E-6537	1638
6E-6538	1638
6E-6539	1638
6E-6540	1638
6E-6550	1566
	1569
6F-0156	811
6F-0253	458
	459
	522
	523
	1709
	1713
	1727
6F-0698	1709
6F-5559	1546
6F-7045	453
6F-7061	1547
	1556
6F-8499	982
6G-2256	279
6G-2263	279
	283
	287
6G-4195	1172
	1174
	1176
6H-0411	2092
6H-1717	710
6H-3956	909
6H-6043	860
	863
	867
6H-7062	1294
	1302
	1311
	1590
	1595
6I-0213	261
	262
	263
6I-0901	121
	123
	125
6I-0928	67
	68
	69
	71
6I-1055	53
	55
	57
6I-1418	295
	296
	533
	541
	548
	554
	559
	566
	574
	1771
	1807
6I-1458	99
	100
	102
	103
	104
	105
6I-2431	190
	192
	194
	196
6I-2435	190
	192
	194
	196
6I-3623	85
6I-3624	85
6I-3625	85
6I-3638	13
	15
	17
	▶78
6I-4025	70
	73
6I-4421	53
	55
	57
6I-4575	26
6I-4582	85
6I-7433	1527
	1529
6I-8249	1946
	1948
6I-8250	1946
	1948
6I-8298	1926
6I-8299	1926
6J-2386	1371
6J-2419	730
6J-2680	778
	785
	792
	799
	806
	1347
	1351
	1355
	1360
	1556
6J-2797	1334
	1335
	1336
6J-4568	1394
	1395
6J-6439	1329
6J-6721	812
6K-0806	1399
	1401
	1403
6K-1972	1172
	1174
	1176
6K-3273	1834
	1835
6K-4934	744
	748
	753
	757
	764
6K-4935	744
	748
	753
	757
	764
6K-5290	748
	753
	757
	764
	1294
	1302
6K-5291	744
	748
	753
	757
	764
	1296
	1304
6K-6307	1388
	1392
	1614
	1640
6K-6967	1007
	1012
	1020
	1025
	1029
	1034
	1038
	1042
	1046
	1050
	1056
	1235
	1260
6K-8178	370
	374
	379
	387
6K-9194	680
	682
	684
	686
6L-2479	999
6L-3616	1001
	1004
	1007
	1012
	1016
	1020
	1025
	1029
	1034
	1038
	1042
	1046
	1050
	1056
	1070
	1074
	1078
	1080
	1082
	1088
	1090
	1118
	1122
	1126
	1134
	1137
	1145
6L-5551	427
6L-8598	1729
6L-8617	167
	170
	173
	176
6M-1622	676
	677
	891
	892
	893
	895
	897
6M-1637	712
6M-1638	712
6M-6853	680
	682
	684
	686
6M-9155	1280
	1281

▶ PRIMARY REFERENCE

PART NUMBER INDEX

Part	Page
6N-1931	157
6N-3279	444
	449
6N-3826	444
	449
6N-6984	950
6N-7654	75
6N-8744	1708
6N-9590	198
6P-4903	731
	735
6P-4947	730
	734
6P-5751	811
6P-6641	351
	363
	370
	374
	379
	383
	387
6P-6739	812
6P-7379	812
6P-7705	812
6P-8875	1857
6P-9553	862
	867
6P-9592	402
6R-3966	1371
6R-7653	1716
	1718
6S-1753	812
6S-3002	1547
	1556
6S-4039	1007
	1012
	1016
	1020
	1025
	1029
	1034
	1038
	1042
	1046
	1050
	1056
	1092
	1096
	1100
	1105
	1109
	1113
	1118
	1122
	1126
6S-6251	688
	693
	698
	777
	784
	791
	798
	968
	971
	974
6S-8620	167
	170
	173
6T-0363	444
	449
6T-0371	444
	449
6T-0372	444
	449
6T-3631	468
	664
	667
	672
6T-3632	468
	664
	667
	672
6T-3633	468
	664
	667
	672
6T-3642	534
	542
	549
	555
	561
	568
	576
6T-3643	534
	542
	549
	555
	561
	568
	576
6T-3644	559
	568
	576
6T-3720	811
6T-5545	887
6T-5598	595
	597
6T-6052	811
6T-7695	1761
6T-8115	542
6V-0128	27
	29
	30
	31
	32
6V-0467	1294
	1302
	1311
6V-0484	238
	242
	246
	718
	806
	1466
	1471
	1622
	1632
6V-0491	519
	520
6V-0675	198
6V-0683	232
	234
	238
	242
	246
	256
	280
	284
	288
	739
	760
	1509
	1511
	1513
6V-0723	1752
6V-0826	597
	629
	638
6V-0836	811
6V-0852	223
	225
	227
	229
	234
	641
	643
	647
	649
	680
	682
	684
	686
	718
	777
	784
	791
	798
	805
	846
	848
	850
	853
	856
	876
	881
	1285
	1294
	1302
	1311
	1326
	1346
	1350
	1354
	1359
	1376
	1399
	1401
	1403
	1431
	1434
	1437
	1465
	1470
	1542
	1543
6V-0974	1507
6V-1197	34
	35
6V-1228	2067
	2072
	2075
	2078
	2081
	2084
6V-1249	1001
	1004
	1062
	1064
	1067
	1080
	1082
	1085
	1088
	1090
	1132
	1406
6V-1270	727
6V-1322	444
	449
6V-1392	900
6V-1572	669
	770
	1347
	1351
	1355
	1360
	1507
	1519
	1521
6V-1573	669
	770
	1347
	1351
	1355
	1360
	1507
	1519
	1521
6V-1574	669
	770
	1507
	1515
	1519
	1521
	1523
6V-1614	1729

► PRIMARY REFERENCE

PART NUMBER INDEX

Part	Page
6V-1635	902
	917
	941
	1838
	1841
6V-1668	1697
6V-1722	319
	1792
6V-1746	887
6V-1820	669
	686
	830
	832
	867
6V-1867	1517
6V-1868	1517
6V-1874	739
	760
	982
6V-1889	704
	706
	708
	724
	744
	748
	753
	757
	764
	806
	1313
	1432
	1435
	1437
	1472
	1476
	1483
	1490
	1497
	1774
	1777
	1781
	1785
6V-1949	1394
6V-1970	1
	2
	▶1796
6V-2235	1062
	1064
	1067
	1085
	1132
6V-2313	1276
	1813
	1815
6V-2316	1172
	1174
	1176
6V-2317	882
	885
6V-2369	566
	575
6V-2370	891
	897
	906
	909
	1751
	1844
6V-2383	474
	475
	477
	618
	625
	629
	638
	997
	2072
	2081
	2084
6V-2491	922
	1734
	1833
6V-2495	1775
	1777
	1781
	1785
6V-2496	1698
	1906
6V-2679	2088
6V-2687	486
	493
	500
	512
	522
	1761
6V-2689	386
	519
	520
	637
6V-2722	529
	636
6V-3251	119
6V-3265	360
	367
	370
	374
	379
	383
	605
	608
	618
	625
	629
	638
	641
	657
	680
	684
	1134
	1296
	1304
	1313
6V-3303	680
	682
	684
	686
	753
	757
	764
6V-3341	486
	493
	500
	512
6V-3382	1546
	1555
6V-3532	712
6V-3551	1371
6V-3668	710
	860
	887
	1592
	1605
	1618
	1627
6V-3677	85
6V-3683	402
	403
	404
6V-3823	834
	860
	863
	867
	875
	1547
	1556
6V-3830	107
	109
6V-3935	846
	848
	850
	853
	856
6V-3964	295
	296
6V-3965	229
	718
	778
	785
	792
	799
	806
	846
	848
	850
	853
	856
	878
	879
	880
	881
	1286
	1294
	1302
	1311
	1326
	1346
	1350
	1354
	1359
	1376
	1399
	1401
	1403
	1431
	1434
	1437
	1465
	1470
	1477
	1482
	1489
	1496
	1542
	1543
	1591
	1596
	1604
	1609
	1618
	1622
	1627
	1632
6V-3987	1716
	1718
6V-4248	731
	735
	826
	860
	863
	868
	1788
6V-4349	1062
	1064
	1067
	1085
6V-4356	1774
	1777
	1781
	1785
6V-4357	1774
	1777
	1781
	1785
6V-4429	719
6V-4589	55
	57
	234
	238
	242
	246
	270
	460
	461
6V-4636	1551
	1553
6V-5048	223
	225
	227
	229
	234
	274
	403
	404
	410
	412
	424
	426
6V-5049	70
	238
	410
	412

▶ PRIMARY REFERENCE

PART NUMBER INDEX

Part	Page
	423
6V-5063	184
6V-5064	184
6V-5065	118
6V-5142	1383
	1655
6V-5215	1556
6V-5220	1729
6V-5258	766
6V-5324	1387
6V-5555	1653
6V-5684	712
	860
	863
	868
	1547
	1556
6V-5686	1547
	1556
6V-5758	1382
6V-5759	1618
	1622
	1627
	1632
6V-5839	95
	363
	680
	682
	684
	686
	731
	735
	824
	830
	832
	860
	863
	868
	1165
	1566
	1569
	1788
6V-5842	680
	682
	684
	686
6V-5843	229
	860
	863
	868
6V-6210	1909
	1912
	1915
	1919
	1923
6V-6317	731
	735
6V-6535	1926
	1984
	1992
	2001
	2002
	2003
	2004
	2005
	2007
	2008
6V-6609	117
	119
	184
	250
	252
	257
	436
	439
6V-6640	731
	734
6V-6703	299
	300
	307
	308
	311
6V-6716	618
	624
	628
	635
6V-6718	1274
6V-6864	1923
6V-6889	1909
6V-6923	272
	273
	1646
	1651
6V-7238	1792
6V-7357	454
	512
	531
	1710
	1713
	1736
	1738
	1763
6V-7419	1909
	1912
	1915
	1919
	1923
6V-7420	234
	238
	242
	247
6V-7423	846
	848
	850
	853
	856
6V-7646	1697
	1880
	1882
	1885
6V-7675	846
	848
	850
	853
	856
6V-7681	1544
	1545
6V-7687	915
	982
	1164
	1726
6V-7723	1559
6V-7728	1697
6V-7743	1710
	1713
6V-7744	909
	1566
	1569
6V-8076	1346
	1350
	1354
6V-8077	1346
	1350
	1354
6V-8149	830
	832
	1354
	1359
6V-8150	1280
	1281
6V-8185	533
	541
	549
	561
6V-8187	534
	542
	549
	554
	555
	560
	566
	574
6V-8188	77
	280
	284
	445
	450
	482
	912
	1338
	1343
6V-8189	276
	1768
	1771
6V-8200	221
	1572
	1575
	1578
	1582
	1586
	1592
	1597
6V-8212	719
6V-8225	344
	1700
	1701
6V-8237	810
	827
	1413
	1415
	1417
	1419
	1422
	1423
	1428
	1430
	1993
6V-8243	1547
	1556
6V-8281	887
6V-8352	1638
6V-8360	1926
	1983
	2000
	2001
	2002
	2006
6V-8369	470
	484
	491
	498
	508
	522
6V-8373	1172
	1174
	1176
6V-8374	672
6V-8376	534
	542
	549
	555
	559
	560
	561
	568
	576
6V-8397	153
	250
	252
	254
	657
	688
	693
	694
	698
	699
	724
	777
	778
	784
	785
	791
	792
	798
	799
	800
	806
	1034
	1038
	1042
	1046
	1050
	1056
	1062
	1064
	1067
	1070
	1074
	1080
	1082

PART NUMBER INDEX

Part	Page	Part	Page	Part	Page	Part	Page
	1084		1359		1172		1303
	1085		1363		1174		1312
	1088		1364		1176		1326
	1090		1366		1225		1406
	1092		1367		1235		1466
	1100		1405		1260		1471
	1113		1406		1286		1572
	1131		1431		1290		1575
	1132		1434		1292		1578
	1134		1437		1294		1582
	1147		1465		1295		1586
	1172		1466		1296		1591
	1174		1470		1302		1596
	1176		1471		1303	6V-8626	234
	1186		1475		1304		238
	1188		1476		1309		242
	1189		1481		1311		246
	1204		1482		1312	6V-8627	2067
	1206		1488		1313		2072
	1208		1489		1320		2075
	1210		1495		1322		2078
	1212		1496		1324		2081
	1214		1507		1326		2084
	1216		1509		1338	6V-8629	1482
	1219		1511		1342	6V-8632	234
	1221		1513		1364		238
	1223		1572		1367		242
	1225		1573		1405		246
	1231		1575		1406		319
	1233		1578		1466		1363
	1235		1579		1470		1366
	1237		1582		1471		1591
	1238		1583		1476		1596
	1239		1586		1482	6V-8634	153
	1243		1587		1489		154
	1245		1591		1496		1295
	1247		1595		1572		1303
	1249		1596		1575		1312
	1250		1618		1576		1363
	1252		1622		1578		1366
	1253		1627		1579	6V-8635	155
	1254		1632		1582		688
	1255		1993		1583		693
	1260	6V-8398	167		1586		698
	1262		170		1590		1405
	1263		171		1591	6V-8636	777
	1285		173		1596		784
	1286		174		1724		791
	1294		176		1993		798
	1295		198	6V-8400	739		806
	1296		234		743		1295
	1302		238		744		1303
	1303		242		747		1312
	1304		243		748		1322
	1311		246		752		1324
	1312		247		753		1363
	1313		657		756		1366
	1320		724		757		1405
	1322		774		760		1481
	1324		1062		763		1488
	1338		1064		764		1495
	1342		1067	6V-8455	712		1507
	1346		1084	6V-8625	1290		1509
	1350		1131		1292		1511
	1354		1147		1295		1513

PART NUMBER INDEX

Part	Page
	1573
	1575
	1578
	1582
	1586
	1591
	1595
6V-8637	739
	743
	747
	752
	756
	760
	763
	766
	770
	777
	784
	791
	798
	805
	1295
	1303
	1312
	1411
	1465
	1471
	1475
	1481
	1488
	1495
6V-8639	171
	174
	177
	1295
	1303
	1312
	1405
	1466
	1591
	1596
	1724
6V-8640	1489
	1496
6V-8641	777
	784
	2067
	2072
	2075
	2078
	2081
	2084
6V-8642	1590
	1595
6V-8647	167
	170
	173
	176
	190
	192
	194
	196
6V-8713	1363
	1366
6V-8716	693
	698
	743
	747
	752
	756
	763
	766
	1431
	1434
6V-8721	1476
	1482
	1489
	1496
6V-8722	319
6V-8723	250
	252
	254
	778
	785
	800
	1364
	1367
	1406
	1466
	1471
6V-8724	657
	792
	1131
	1286
	1295
	1303
	1312
	1338
	1342
	1346
	1350
	1354
	1364
	1367
	1406
	1507
	1572
	1575
	1578
	1582
	1586
	1591
	1596
6V-8774	1509
	1511
	1591
	1596
6V-8775	1364
	1367
6V-8780	167
	170
	173
	176
6V-8781	1322
	1507
	1572
	1575
	1578
	1582
	1586
6V-8782	1296
	1303
	1312
	1406
6V-8784	1471
	1476
	1482
	1489
	1496
6V-8789	1290
	1292
	1309
6V-8791	766
	770
6V-8801	291
	351
	370
	374
	379
	383
	568
	576
6V-8837	529
6V-8928	1768
	1771
6V-8936	657
	1286
	1406
6V-8941	688
	694
	699
6V-8942	1476
	1482
	1489
	1496
6V-8946	1346
	1350
	1354
	1359
	1476
	1482
	1489
	1496
6V-8969	1825
	1826
6V-8980	1131
6V-8981	1286
	1295
	1303
	1309
	1312
	1364
	1367
	1724
6V-8983	688
	694
	699
	1476
	1482
	1489
	1496
6V-8985	752
	756
	763
6V-8987	1062
	1064
	1067
	1084
6V-8988	1062
	1064
	1067
	1084
	1724
6V-8990	744
	748
	753
	757
	764
	766
	770
6V-8991	1466
	1471
6V-8995	1286
	1296
	1303
	1313
	1724
6V-8997	744
	748
	753
	757
	764
	766
	770
6V-8998	1431
	1434
6V-9001	778
	785
	792
	1346
	1350
	1354
	1359
	1363
	1366
	1466
	1471
	1475
	1482
	1489
	1496
	1572
	1575
	1578
	1582
	1586
6V-9002	1338
	1342
6V-9004	739
	748
	753
	757
	760
	764
	1431
	1476
	1482
	1489
	1496
6V-9005	155

► PRIMARY REFERENCE

PART NUMBER INDEX

Part	Page
	156
6V-9007	688
	693
	698
	739
	760
	1411
	1437
	1466
	1471
	1475
	1481
	1488
	1495
	1564
	1591
	1596
6V-9008	689
	694
	699
	1431
	1434
	1437
6V-9023	519
	549
	554
	566
	575
	598
	637
6V-9027	182
6V-9028	1993
6V-9160	1476
	1482
	1489
	1496
6V-9162	778
	785
	791
	798
	806
6V-9168	657
	724
	726
	1062
	1064
	1067
	1080
	1082
	1085
	1088
	1090
	1132
	1134
	1472
6V-9169	1062
	1064
	1067
	1085
	1286
	1296
	1304
	1309
	1313
	1316
	1317
	1364
	1367
	1466
	1472
	1724
6V-9172	1432
	1435
	1466
	1472
6V-9173	753
	757
	764
6V-9182	688
	693
	698
	743
	747
	752
	756
	763
	1431
	1434
	1437
	1466
	1471
6V-9189	329
	330
	335
	336
	337
	338
6V-9200	688
	693
	1172
	1174
	1176
6V-9327	1890
	1894
	1899
6V-9505	1729
6V-9606	1768
	1771
6V-9632	349
	353
	365
	395
	398
	400
	454
	484
	485
	491
	492
	499
	508
	509
	522
	595
	605
	608
	612
	1709
	1729
	1734
	1740
	1768
	1771
	1803
	1860
	1863
	1872
	1890
	1899
6V-9746	688
	689
	693
	694
	698
	699
	739
	743
	744
	747
	748
	752
	753
	756
	757
	760
	763
	764
	766
	770
	777
	778
	779
	784
	785
	786
	791
	798
	799
	800
	805
	806
	877
	1062
	1064
	1067
	1085
	1294
	1295
	1296
	1302
	1303
	1304
	1311
	1312
	1313
	1346
	1347
	1350
	1351
	1354
	1355
	1359
	1360
	1411
	1431
	1434
	1437
	1465
	1466
	1470
	1471
	1472
	1475
	1476
	1481
	1482
	1483
	1488
	1489
	1490
	1495
	1496
	1497
	1564
	1591
	1596
6V-9807	1080
	1082
	1088
	1090
	1134
6V-9830	1406
	1592
	1597
6V-9833	1432
	1435
	1572
	1576
	1579
	1583
	1587
	1592
	1597
6V-9836	1131
	1147
	1186
	1189
	1204
	1206
	1208
	1210
	1212
	1214
	1223
	1233
	1238
	1239
	1243
	1245
	1247
	1250
	1255
	1364
	1367
	1583
	1587
	1591
	1596
6V-9837	1084
	1131

PART NUMBER INDEX

Part	Page
	1286
	1296
	1303
	1312
	1326
	1406
	1591
	1596
6V-9838	1364
	1367
6V-9839	766
	770
	1431
	1476
	1482
	1489
	1496
6V-9840	1431
	1434
	1437
6V-9843	1134
	1509
	1993
6V-9844	1286
	1476
	1482
	1489
	1496
	1591
	1596
6V-9847	1406
6V-9850	657
	778
	785
	792
	798
	1080
	1082
	1088
	1090
	1186
	1188
	1212
	1214
	1216
	1219
	1221
	1223
	1231
	1237
	1247
	1249
	1250
	1252
	1253
	1254
	1255
	1304
	1312
	1342
	1363
	1366
	1573
	1575
	1578
	1582
	1586
	1591
	1596
6V-9851	1176
	1295
	1303
	1312
	1326
	1364
	1367
	1406
	1993
6V-9853	744
	748
	753
	757
	764
	799
	806
	1295
	1303
	1312
6V-9854	688
	693
	698
	1406
	1434
6V-9855	739
	743
	748
	753
	757
	760
	764
6V-9872	182
	698
	1481
	1488
	1495
6V-9873	1172
	1174
	1176
	1320
	1364
	1367
	1406
	1476
	1482
	1489
	1496
6V-9876	806
6V-9877	739
	743
	747
	752
	756
	760
	763
	1475
6W-3731	1442
6Y-0798	867
6Y-0799	867
6Y-0802	862
	867
6Y-0803	860
	862
	867
6Y-0806	860
	862
	867
6Y-1354	867
6Y-1414	862
	867
6Y-1616	811
6Y-2090	134
6Y-2553	2044
6Y-2736	1373
6Y-2737	1373
6Y-3484	811
6Y-4638	882
	885
6Y-5373	►2048
6Y-5793	812
6Y-6328	730
	734
6Y-6329	730
	734
6Y-6441	730
	734
6Y-6584	313
	315
	317
6Y-6848	710
6Y-8112	1600
7	
7B-1480	774
7B-1597	680
	682
	684
	686
	727
7B-3028	731
	735
7B-3039	735
	1566
	1569
7C-1445	38
7C-4354	486
	493
	500
	512
7C-4355	138
7C-6921	766
	770
7D-1553	618
	625
	629
	638
	744
7D-1728	1092
	1096
	1100
	1105
	1109
	1113
	1118
	1122
	1126
7D-1979	846
	848
	850
	853
	856
7D-4719	715
7D-4721	715
7D-5238	1334
	1335
	1336
7D-7026	319
7D-7233	1432
	1435
7D-8508	1617
	1621
	1626
	1631
7D-8636	727
7D-8637	727
7D-9984	223
	225
7E-4341	107
	111
7E-4342	107
	111
7E-4508	149
	150
	151
7E-5639	486
	493
	500
7E-6508	27
	29
	30
	31
	32
7E-6513	32
7E-8630	199
7E-9171	198
7F-0560	280
	284
	482
	549
	555
	561
	568
	576
7F-2122	812
7F-3488	444
	449
7F-3525	444
	449
7F-6013	860
	863
	868
7F-8607	1547
	1556
	1774
	1777
	1781
	1785
7F-9090	139
	141

► PRIMARY REFERENCE

PART NUMBER INDEX

Part	Page
	143
7F-9223	911
7G-0141	860
	862
	867
7G-0283	812
7G-2476	812
7G-2486	812
7G-2928	811
7G-3457	812
7G-4817	811
7G-4818	811
7G-5746	811
7G-6772	811
7G-7053	394
	395
	397
	398
	400
	1831
7G-7917	485
	510
	519
	567
	575
	582
	598
	618
	636
7G-7918	567
	575
	582
	598
	618
	636
7G-7919	510
7G-7920	485
	510
	567
	575
	582
	598
	618
	636
7G-8839	968
	971
	974
7H-1447	1566
	1569
7H-7658	813
7I-1024	319
	1007
	1012
	1016
	1020
	1025
	1029
	1034
	1038
	1039
	1042
	1043
	1046
	1051
	1057
	1070
	1074
	1078
	1093
	1096
	1101
	1105
	1109
	1113
	1119
	1123
	1126
	1792
	2075
	2078
	2081
	2084
7I-4078	1324
7I-8640	1446
	1449
	1452
	1455
	1458
	1460
7J-0204	1605
	1610
7J-0402	710
7J-1089	1388
	1391
7J-1592	1610
	1622
	1632
7J-2546	1385
7J-2656	1566
	1569
7J-2927	1388
	1391
7J-5225	1564
7J-7423	1391
7J-7852	1604
	1609
	1618
	1622
	1627
	1632
7J-9108	234
	238
	239
	242
	243
	246
	247
	319
	1363
	1364
	1366
	1367
	1590
	1591
	1592
	1595
	1596
7J-9250	1422
	1423
	1428
	1430
7J-9933	1329
7K-1181	238
	242
	246
	292
	294
	394
	400
	484
	485
	486
	491
	492
	493
	498
	499
	500
	508
	510
	511
	519
	521
	522
	559
	605
	619
	624
	628
	635
	669
	672
	1507
	1724
	1763
	1807
	1813
	1815
7K-1401	778
	785
	792
	799
	806
7K-1402	778
	785
	792
	799
	806
7K-1972	929
	932
7K-3176	1788
	1790
7K-3262	1768
7K-3304	1788
	1790
7K-3436	1172
	1174
	1176
7K-4201	1752
	1768
	1771
7K-4942	1278
	1294
	1302
	1311
7K-6058	88
	90
7K-9197	209
7K-9204	1278
7L-2181	730
	734
7L-2894	444
	449
7L-9061	846
	848
	851
	853
	856
7M-0324	444
	449
7M-0325	445
	449
7M-0326	444
	449
7M-0327	444
	449
7M-1297	719
7M-5130	1388
	1391
7M-8479	811
7M-8480	811
7M-8485	155
	156
	167
	170
	173
	176
	267
	269
	323
	324
	676
	677
	688
	689
	693
	694
	698
	699
	719
	739
	743
	744
	747
	748
	752
	753
	756
	760
	763
	764
	766
	846
	848
	853
	882
	885
	924
	926
	1286

PART NUMBER INDEX

Part	Page
	1295
	1296
	1316
	1317
	1326
	1330
	1385
	1405
	1431
	1434
	1437
	1465
	1466
	1470
	1471
	1476
	1483
	1490
	1497
	1547
	1556
	1572
	1576
	1579
	1583
	1587
	1592
	1597
	1604
	1609
	1617
	1621
	1626
	1631
	1641
	1652
7M-8651	444
	449
7M-9909	846
	848
	853
7N-0296	441
7N-0452	80
7N-0719	279
	283
	▶453
	482
7N-1228	719
7N-2059	472
7N-2156	157
7N-5876	1803
	1805
7N-7221	519
7N-7559	153
	154
7N-7878	203
7N-9801	471
7N-9943	326
7R-0042	766
	770
7R-2750	567
	575
7R-2751	567
	575
7S-0530	1369
7S-1801	777
	784
	791
	798
	805
7S-2962	731
	735
7S-3996	1278
7S-3997	1278
7S-3998	744
	942
7S-4002	1278
7S-4244	1132
	1906
7S-5005	47
7S-8491	1391
7S-8553	1386
7T-0020	326
7T-0920	1860
	1863
	1866
	1869
	1872
	1875
7T-1099	211
	921
	922
	971
	1442
	1527
	1838
	1860
	1872
	1875
	1902
7T-1159	167
7T-3974	444
	449
7T-4532	1706
7T-4925	280
	284
	287
7T-6799	484
	491
	498
	508
	523
7T-7388	1172
	1174
	1176
7T-8331	199
	968
	971
	974
	982
	987
	991
	994
7T-8890	1906
7T-9123	445
7T-9346	637
7T-9745	1660
7T-9766	1657
7T-9988	280
	284
	287
7U-9224	1993
7V-0445	1890
	1894
7V-6571	597
7V-8346	1280
	1281
7V-9275	533
	541
	548
	554
	560
	566
	574
7W-1484	2092
7W-2297	214
7W-6492	139
	141
7W-7381	254
7W-7417	209
7W-8106	582
	585
	589
	592
	598
	612
	1080
	1082
	1088
	1090
	1132
	1497
7X-0288	582
7X-0297	234
	239
	243
	247
7X-0325	778
	785
	792
	799
	806
7X-0345	120
7X-0492	1092
	1096
	1100
	1105
	1109
	1113
	1134
	1139
	1141
	1143
7X-0515	297
	939
	943
	945
	947
	983
	987
	989
	991
	994
	1169
	1170
	1337
	1406
7X-0531	1472
7X-0550	164
7X-0562	445
	450
7X-0575	1890
7X-0583	1572
	1576
	1579
	1583
	1587
	1592
	1597
7X-0584	1347
	1351
	1355
	1360
7X-0589	568
	576
7X-0590	199
	778
	785
	792
	799
	968
	971
	974
	983
	987
	991
	994
	1411
7X-0595	935
7X-0603	1163
7X-0608	1691
7X-0613	234
	239
	243
	247
7X-0618	689
	694
	699
7X-0620	371
	375
	379
	383
	387
7X-0632	1708
7X-0732	1080
	1082
	1088
	1090
7X-0750	582
	585
	589
	592
	598
	924
	926
	954
7X-0751	929
	932
7X-0752	959
	964

▶ PRIMARY REFERENCE

PART NUMBER INDEX

Part	Page
	1590
	1595
7X-0766	909
7X-0772	473
7X-0818	406
	407
	534
	542
	549
	555
	561
	568
	577
	846
	1736
	1738
	1771
	1807
7X-0820	1134
7X-0871	1286
	1294
	1302
	1311
	1326
7X-0873	791
	1294
	1302
	1311
	1431
	1434
	1437
7X-2049	1774
7X-2393	980
	982
	987
	989
	994
7X-2438	1373
7X-2459	1359
	1431
	1434
	1437
	1617
	1621
	1626
	1631
7X-2475	1515
	1523
	1614
7X-2488	837
	838
7X-2497	1740
	1743
	1745
	1747
	1749
7X-2533	331
	332
7X-2534	529
	629
	638
	659
	660
	670
	997
	999
	1001
	1004
	1007
	1012
	1016
	1020
	1025
	1029
	1078
	1096
	1105
	1109
	1118
	1122
	1126
	1286
	1406
	1899
7X-2535	1768
	1771
7X-2537	997
	999
7X-2543	1515
	1523
	1614
	1640
7X-2546	1605
	1610
	1618
	1622
	1627
	1632
7X-2549	744
	778
	785
	792
	799
	806
	1347
	1351
	1355
	1360
	1411
	1527
	1529
	1605
	1610
	1618
	1622
	1627
	1632
7X-2552	778
	785
	792
	799
	806
	1466
	1472
	1688
7X-2553	297
	837
	838
	939
	983
	987
	989
	991
	994
	1169
	1170
	1406
	1446
	1449
	1452
	1455
	1458
	1460
	1515
	1519
	1521
	1523
	1531
	1533
	1535
	1592
	1597
	1688
7X-2554	1458
	1572
	1576
	1579
	1583
	1587
	1592
	1597
7X-2555	860
	863
	868
7X-2556	943
	945
	947
	1406
	1446
	1449
	1452
	1455
	1458
	1460
	1515
	1519
	1523
	1527
	1529
	1531
7X-2557	1597
7X-2559	1525
	1526
	1537
7X-2563	134
	950
	1544
	1545
	1561
7X-2564	134
7X-2566	837
7X-2575	1688
7X-2583	1688
7X-2618	1286
	1320
	1322
	1324
7X-2621	1029
	1057
7X-2622	838
7X-3164	1285
7X-3186	597
7X-3229	2088
7X-3310	1890
	1894
	1899
7X-3319	484
	491
	498
	508
	522
7X-3373	444
	449
7X-3392	739
	760
	766
	770
	778
	785
	792
	799
	806
	1296
	1304
	1313
	1466
	1472
7X-4743	500
	512
	672
7X-4776	1384
7X-4780	361
	362
	408
	409
	654
	655
	953
7X-6222	1803
	1805
7X-6315	299
	300
	301
	302
	306
	307
	308
	310
	311
7X-7700	221
	267
	269
7X-7729	159
	160
	167
	170
	173
	176
	190
	192

PART NUMBER INDEX

Part	Page
	194
	196
	280
	284
	351
	363
	371
	375
	379
	383
	387
	482
	524
	613
	689
	694
	699
	704
	706
	708
	748
	753
	757
	764
	906
	908
	909
	917
	919
	941
	942
	943
	945
	947
	968
	971
	974
	980
	983
	987
	989
	991
	994
	1139
	1141
	1143
	1157
	1296
	1304
	1313
	1432
	1435
	1437
	1472
	1483
	1490
	1497
	1515
	1523
	1592
	1597
	1708
	1751
	1774
	1777
	1781
	1785
	1813
	1815
	1838
	1841
	1893
	1906
	2084
7X-7731	88
	90
	179
	184
7X-7740	966
7X-7816	846
	848
	851
	853
	857
7Y-0467	1373
7Y-1863	766
	770
7Y-1976	167
	170
	173
	176
7Y-2522	929
	932
7Y-3173	1727
7Y-3729	1347
	1351
	1355
	1359
7Y-4038	1502
	1505
7Y-4224	1555
7Y-5267	1541
7Y-7256	1828
7Y-8763	559
	926
8	
8B-0544	764
8B-1312	812
8B-2664	319
	1172
	1174
	1176
8B-4884	997
	999
	1134
	1225
	1231
	1235
	1237
	1260
8B-9294	394
	400
8C-0624	138
8C-3056	549
	554
	560
	566
	575
	595
	597
8C-3078	1722
	1723
8C-3085	1602
8C-3089	207
	208
	444
	449
8C-3093	689
	694
	699
8C-3097	1384
8C-3110	1551
	1553
8C-3205	739
	760
	1290
	1292
	1347
	1351
	1355
	1360
	1466
	1472
8C-3206	739
	761
	1296
	1304
	1313
	1407
	1472
	1477
	1483
	1490
	1497
	1566
	1569
8C-3210	1740
	1743
	1745
	1747
	1749
8C-3236	712
8C-3334	378
8C-3364	748
	753
	756
	764
8C-3442	1729
8C-3445	139
	141
	143
8C-3446	139
	141
	143
	235
	274
	718
	805
	1466
	1471
8C-3447	718
	805
8C-3451	1360
	1465
	1470
	1477
	1481
	1488
	1495
8C-3756	1697
8C-4403	1688
8C-4586	1697
8C-5063	77
8C-5197	1371
8C-5230	147
8C-5607	527
	528
	574
8C-5608	331
	332
	527
	528
	574
8C-5917	279
	283
8C-6162	766
	770
8C-6354	484
	491
	498
	508
	518
8C-6358	279
	283
	482
8C-6523	1792
8C-6712	718
	805
	1465
	1470
8C-6738	1907
	1908
8C-6865	999
	1004
	1118
	1122
	1126
	1180
	1183
	1197
	1230
	1257
	1258
	1259
8C-6869	1034
	1038
	1042
	1046
	1050
	1056
	1070
	1074
	1080
	1082
	1088
	1090
	1092

► **PRIMARY REFERENCE**

PART NUMBER INDEX

Part	Page
	1100
	1113
	1134
	1186
	1188
	1189
	1204
	1206
	1208
	1210
	1212
	1214
	1216
	1219
	1221
	1223
	1225
	1231
	1233
	1235
	1237
	1238
	1239
	1243
	1245
	1247
	1249
	1250
	1252
	1253
	1254
	1255
	1263
8C-6871	167
	170
	173
	176
	182
	774
8C-6872	1062
	1064
	1067
	1084
	1131
	1172
	1174
	1176
8C-6959	235
	239
	243
	247
8C-7508	1727
8C-7510	647
	649
	651
8C-7528	641
	643
	647
	649
	651
	669
8C-7575	1092
	1096
	1100
	1105

Part	Page
	1118
	1122
8C-8451	527
	528
	577
8C-8533	777
	784
	791
	798
8C-8722	1688
8C-8723	891
	892
	893
	895
	897
8C-8771	836
8C-8988	724
	1062
	1064
	1067
	1084
	1338
8C-8989	1062
	1064
	1067
	1084
	1296
	1304
	1313
	1364
	1367
8C-8992	887
8C-9029	766
8C-9160	1334
	1335
	1336
8C-9660	444
	449
	1727
8C-9987	884
	1657
	1659
8D-6542	1771
8D-9947	1477
	1483
	1490
	1497
8E-0464	1944
8E-2467	1926
8E-2468	1926
8E-2469	1926
8E-2882	860
	862
	867
8E-3758	►2043
8E-3759	►2044
8E-7366	710
8E-7367	710
8E-8304	812
8E-8316	813
8E-8328	862
8E-9571	885
8E-9898	►2007
8F-0212	730
8F-0492	1354

Part	Page
	1359
8F-1434	445
	450
8F-3469	726
	1566
	1569
8F-6437	983
8F-7219	231
8F-8544	811
8F-9206	1774
	1777
	1781
	1785
8H-2768	727
8H-3127	27
	29
	30
	31
8H-3532	1385
	1641
	1652
8H-3981	846
	848
	851
	853
	856
8H-5303	453
8H-5306	453
8H-8257	710
	1278
8J-0101	1546
8J-0331	1385
	1641
	1652
8J-2357	454
8J-2962	915
8J-3415	351
	363
	371
	375
	379
	383
	387
8J-4351	402
	403
	404
8J-6815	846
	848
	850
	853
	856
	860
	862
	867
	1653
8J-6875	1285
	►1331
8J-8782	735
	1566
	1569
8J-8783	735
	1566
	1569
8J-9841	►2057
8J-9842	►2049

Part	Page
8K-1433	167
	170
	173
	176
8K-4739	234
8L-2777	121
	123
	124
	125
	127
	128
8L-2786	117
	153
	223
	225
	227
	229
	435
	438
	722
	723
	868
	1661
8L-5008	997
	999
	1001
	1004
	1007
	1012
	1016
	1020
	1025
	1029
	1034
	1038
	1042
	1046
	1050
	1056
	1070
	1074
	1078
	1080
	1082
	1088
	1090
	1092
	1096
	1100
	1105
	1109
	1113
	1118
	1122
	1126
	1134
	1141
	1143
	1186
	1188
	1212
	1214
	1216
	1219
	1233

► PRIMARY REFERENCE

PART NUMBER INDEX

Part	Page
	1238
	1247
	1249
	1268
8L-6005	319
	1225
	1231
	1233
	1235
	1237
	1238
8L-6565	1602
	1605
	1610
	1614
	1618
	1622
	1627
	1632
8L-8137	204
8L-8413	82
	287
	1709
	1713
	1903
8M-0456	534
	542
8M-0627	1527
	1529
8M-1013	882
	885
8M-2537	881
8M-2770	608
	618
	625
	629
	638
	774
	1592
	1597
8M-2771	1710
	1713
8M-2772	220
	221
	454
	582
	585
	1001
	1004
	1007
	1012
	1016
	1020
	1025
	1029
	1034
	1038
	1042
	1046
	1050
	1056
	1070
	1074
	1078
	1080
	1082
	1088
	1090
	1109
	1113
	1126
	1134
	1137
	1139
	1141
	1143
8M-2773	603
	605
	608
	618
	625
	629
	638
	641
	643
	647
	649
	651
	654
	655
	669
	778
	785
	792
	799
	806
	1007
	1012
	1016
	1020
	1025
	1029
	1046
	1050
	1056
	1078
	1092
	1096
	1105
	1109
	1118
	1122
	1126
	1313
	1496
	1774
	1777
	1781
	1785
	2072
	2078
	2081
	2084
8M-3837	887
8M-4390	813
8M-4443	778
	785
	792
	799
	806
8M-4986	778
	785
	792
	799
	806
	881
8M-4989	860
	863
	868
8M-5127	778
	785
	792
	799
	806
8M-6146	641
	643
	647
	649
	651
8M-6393	719
8M-6802	1380
8M-7066	198
8M-7758	1768
	1771
8M-8157	778
	785
	792
	799
	806
8M-8489	157
	824
8M-8627	881
8M-8659	730
	734
8M-8948	534
	542
8M-9024	211
8N-0869	279
	283
	287
	482
8N-1513	533
	541
	618
	625
	628
	637
8N-1514	485
	492
	499
	510
	519
	618
	625
8N-1515	618
	625
	628
	637
8N-1516	582
	585
	598
8N-1517	533
	541
	559
	567
	575
	618
	625
	629
	636
8N-1518	582
	585
	598
	618
	625
	629
	636
8N-1519	533
	541
	559
8N-1520	485
	492
	499
	510
8N-1521	485
	492
	499
	510
	518
	582
	585
	598
	618
	625
	629
	636
8N-1522	567
	575
	637
8N-1528	559
8N-1529	672
8N-1535	485
	492
	499
	510
	518
	559
	618
	625
	629
	636
	672
8N-1536	637
8N-1540	567
	575
	636
8N-1541	510
	598
	637
8N-1542	567
	575
	636
8N-1543	510
	598
	637
8N-1544	567
	575
	636
8N-1545	598
	637

► PRIMARY REFERENCE

PART NUMBER INDEX

Part	Page
8N-1725	279
	283
	287
8N-2104	149
	150
	151
8N-4617	202
8P-4617	811
8P-5141	1697
8P-8540	383
	392
8P-8701	826
8P-9770	1944
	1950
	1954
	1965
	1967
	1980
	1998
8Q-2118	171
	174
	177
8R-0052	712
8R-0053	712
8R-0752	1475
	1481
	1488
	1495
8R-2014	704
	706
	708
8R-2857	712
8R-3695	518
8R-4001	394
	400
8R-4147	840
8R-5144	724
8R-5645	347
	348
	▶390
8R-7102	349
	353
	365
8R-7858	968
	971
	974
8S-0948	351
	363
	383
	792
	799
	807
	999
	1034
	1038
	1042
	1046
	1050
	1056
	1062
	1064
	1067
	1070
	1074
	1085
	1092
	1100
	1113
8S-2225	1274
	1276
8S-2332	443
	447
	448
8S-2634	279
	283
8S-3371	862
	867
8S-3746	2092
8S-4212	2092
8S-6109	1774
	1777
	1781
	1785
8S-6110	1774
	1777
	1781
	1785
8S-6212	812
8S-6511	157
8S-6823	201
8S-6824	201
8S-7374	835
8S-9089	179
	184
8S-9094	53
8S-9104	811
8S-9191	261
	262
	263
8T-0075	1286
	1618
	1622
	1627
	1632
8T-0081	234
	238
	242
	246
8T-0106	830
	832
8T-0119	235
	239
	243
	247
8T-0130	724
8T-0197	1466
	1471
8T-0267	1547
	1556
8T-0269	1726
8T-0273	220
	863
	868
8T-0277	1894
8T-0281	830
	832
	835
	836
	873
	874
8T-0285	1572
	1576
	1579
	1583
	1587
	1592
	1597
8T-0288	1735
8T-0328	445
	450
	549
	555
	561
	568
	577
	1709
	1713
	1763
	1880
	1882
	1885
8T-0336	774
8T-0337	486
	493
	500
	512
	522
	1697
8T-0375	810
8T-0389	1407
	1707
8T-0441	677
8T-0558	1566
	1569
8T-0650	714
	716
8T-0666	1417
	1419
	1428
	1430
8T-0668	1413
	1415
	1422
	1423
8T-0669	810
	827
	1417
	1419
	1428
	1430
8T-0722	731
	735
	1566
	1569
	1902
8T-0723	1726
8T-0741	1320
	1322
	1324
8T-0785	1334
	1335
	1336
8T-1141	811
	1280
8T-1158	860
	863
	868
8T-1160	1993
8T-1578	909
8T-1583	717
8T-1674	1572
	1575
	1578
	1582
	1586
	1590
	1595
8T-1685	689
	694
	699
8T-1686	234
	238
	242
	246
8T-1715	1792
8T-1718	1591
	1596
8T-1739	1545
8T-1885	1296
	1304
	1313
	1364
	1367
	1467
	1472
8T-1886	1296
	1304
	1313
	1364
	1367
	1467
	1472
8T-1887	1472
8T-1888	1472
8T-1889	1798
	1799
8T-1890	1798
	1799
8T-1905	1324
8T-2223	1388
	1392
8T-2225	510
8T-2275	1566
	1569
8T-2353	229
	1542
	1543
	1618
	1622
	1627
	1632
8T-2363	1591
	1596
8T-2561	945
	947
	1564
	1774
	1777
	1781
	1785

▶ PRIMARY REFERENCE

PART NUMBER INDEX

Part	Page
8T-2899	1276
8T-3013	712
8T-3282	677
	748
	887
8T-3298	734
	1566
	1569
8T-3312	1465
	1470
8T-3331	1413
	1415
	1422
	1423
8T-3490	159
	160
	161
	167
	170
	173
	176
	190
	192
	194
	196
	211
	234
	238
	242
	246
	252
	254
	256
	279
	283
	284
	288
	349
	351
	353
	355
	356
	361
	362
	363
	370
	374
	375
	378
	379
	382
	386
	392
	482
	582
	585
	589
	592
	598
	605
	612
	617
	619
	624
	628
	635
	641
	643
	647
	649
	651
	657
	704
	706
	708
	747
	805
	902
	908
	916
	919
	921
	922
	943
	968
	971
	974
	982
	1007
	1012
	1016
	1020
	1025
	1029
	1034
	1038
	1042
	1046
	1050
	1056
	1062
	1064
	1067
	1070
	1074
	1078
	1084
	1092
	1096
	1100
	1105
	1109
	1113
	1118
	1122
	1126
	1131
	1139
	1165
	1285
	1290
	1292
	1309
	1342
	1346
	1359
	1363
	1366
	1477
	1481
	1488
	1490
	1495
	1564
	1590
	1595
	1724
	1751
	1774
	1777
	1781
	1785
	1858
	1860
	1872
	1875
	1890
	2067
	2075
	2081
8T-3491	1475
	1481
	1488
	1495
8T-3518	548
	554
	560
	566
	574
8T-3519	279
	283
	482
8T-3597	161
	164
	763
	791
	805
	921
	922
	943
	950
	968
	971
	974
	982
	987
	991
	1346
	1350
	1354
	1359
	1363
	1366
	1470
	1475
	1481
	1488
	1495
	1519
	1521
	1527
	1529
	1535
	1838
	1841
	1844
	1858
	2067
8T-3611	743
	747
	752
	756
	763
8T-3612	213
	234
	238
	242
	246
	408
	472
	559
	968
	971
	974
	1363
	1366
	1590
	1595
	1768
	1771
	1833
	1834
	1835
	1890
8T-3635	929
	1860
	1872
	1875
8T-3647	534
	542
	549
	555
	561
	568
	577
	641
	643
	647
	649
	651
	1286
8T-3851	924
	926
	929
	932
	954
	956
	958
	959
	960
	964
	1668
	1670
	1672
	1673
	1674
	1675
	1676
	1677
	1678

PART NUMBER INDEX

Part	Page	Part	Page	Part	Page	Part	Page
	1686		408		712		1088
8T-3998	1399		409		724		1090
	1401		441		740		1092
	1403		473		744		1096
8T-4121	33		474		748		1100
	155		477		753		1105
	156		479		757		1109
	161		480		761		1113
	167		481		764		1118
	170		482		766		1122
	173		486		770		1126
	176		493		774		1132
	190		500		778		1134
	192		512		785		1137
	194		523		792		1139
	196		525		799		1141
	198		529		807		1143
	204		531		824		1172
	209		534		846		1174
	220		542		848		1176
	221		549		851		1282
	232		555		853		1286
	235		560		856		1290
	239		561		860		1292
	243		568		863		1294
	247		577		868		1296
	252		582		900		1304
	254		585		902		1309
	256		589		904		1313
	278		592		906		1338
	280		595		919		1342
	284		597		921		1347
	288		599		922		1351
	292		605		943		1355
	294		608		945		1360
	313		613		947		1364
	315		618		950		1367
	317		625		953		1407
	318		630		983		1411
	329		638		994		1424
	337		641		997		1426
	338		643		999		1432
	349		647		1001		1435
	351		649		1004		1437
	353		651		1007		1467
	355		654		1012		1472
	356		655		1016		1477
	358		657		1020		1483
	360		659		1025		1490
	361		660		1029		1497
	362		662		1034		1507
	363		663		1038		1509
	365		669		1042		1511
	367		670		1046		1513
	369		677		1050		1519
	371		680		1056		1521
	375		682		1062		1563
	379		684		1064		1564
	383		686		1067		1566
	387		689		1070		1569
	390		694		1074		1592
	391		699		1078		1597
	392		704		1080		1605
	406		706		1082		1610
	407		708		1085		1614

PART NUMBER INDEX

Part	Page
	1707
	1724
	1751
	1763
	1768
	1771
	1774
	1777
	1781
	1785
	1798
	1799
	1800
	1803
	1805
	1813
	1815
	1858
	1860
	1863
	1866
	1869
	1872
	1875
	1897
	1898
	1902
	1993
	2067
	2072
	2075
	2078
	2081
	2084
8T-4122	395
	397
	398
	1467
	1472
	1519
	1521
	1592
	1597
	1610
	1614
	1622
	1632
	1856
	1857
	1859
8T-4123	134
	161
	164
	266
	837
	838
	914
	915
	1313
	1332
	1333
	1708
	1724
	1923
8T-4127	371
	375
	379
	383
	387
8T-4128	1092
	1096
	1100
	1105
	1109
	1113
	1118
	1122
	1126
	1134
	1139
	1141
	1143
8T-4131	161
	164
8T-4132	297
	1572
	1576
	1579
	1583
	1587
8T-4133	247
	254
	292
	294
	351
	356
	363
	369
	371
	375
	379
	383
	387
	487
	493
	500
	512
	522
	542
	549
	555
	561
	568
	577
	582
	585
	589
	592
	599
	641
	643
	647
	649
	651
	669
	704
	706
	708
	724
	778
	785
	917
	919
	949
	980
	983
	987
	989
	991
	994
	997
	999
	1001
	1004
	1007
	1012
	1016
	1020
	1025
	1029
	1034
	1038
	1042
	1046
	1050
	1056
	1062
	1064
	1067
	1070
	1074
	1078
	1080
	1082
	1085
	1088
	1090
	1092
	1096
	1100
	1105
	1109
	1113
	1118
	1122
	1126
	1132
	1139
	1141
	1143
	1157
	1172
	1174
	1176
	1282
	1296
	1304
	1313
	1424
	1426
	1432
	1435
	1437
	1472
	1483
	1490
	1497
	1507
	1515
	1519
	1521
	1523
	1729
	1763
	1774
	1777
	1781
	1785
	1788
	1798
	1799
	1813
	1815
	1860
	1863
	1866
	1869
	1872
	1875
8T-4134	1899
8T-4136	155
	156
	167
	170
	173
	176
	192
	196
	209
	221
	254
	280
	284
	288
	294
	351
	356
	360
	363
	367
	369
	371
	375
	379
	383
	387
	408
	409
	482
	524
	525
	529
	531
	534
	542
	549
	555
	561
	568
	577

► PRIMARY REFERENCE

PART NUMBER INDEX

Part	Page	Part	Page	Part	Page	Part	Page
	582		1042		2072		597
	585		1046		2075		599
	589		1050		2078		605
	592		1056		2081		608
	597		1062		2084		613
	599		1064	8T-4137	167		618
	613		1067		170		625
	618		1070		173		630
	625		1074		176		638
	630		1078		190		641
	638		1085		192		643
	641		1092		194		647
	643		1096		196		649
	647		1100		235		651
	649		1105		239		654
	651		1109		243		655
	659		1113		247		657
	660		1118		280		659
	670		1122		284		660
	680		1126		288		662
	682		1132		313		663
	684		1134		315		669
	686		1296		317		680
	689		1304		349		682
	694		1309		351		684
	699		1313		353		686
	704		1338		355		744
	706		1342		356		748
	708		1347		361		753
	712		1351		362		757
	724		1355		363		764
	740		1360		365		774
	744		1407		371		778
	748		1432		375		785
	753		1435		379		792
	757		1437		383		799
	761		1477		387		807
	764		1483		406		908
	767		1490		407		943
	770		1497		441		947
	778		1507		473		997
	785		1509		474		999
	792		1511		477		1001
	799		1513		479		1004
	807		1592		480		1007
	917		1597		481		1012
	919		1708		482		1016
	941		1724		487		1020
	943		1751		493		1025
	945		1763		500		1029
	947		1774		512		1034
	953		1777		518		1038
	994		1781		534		1042
	997		1785		542		1046
	999		1813		549		1050
	1001		1815		555		1056
	1004		1860		560		1063
	1007		1863		561		1065
	1012		1866		568		1068
	1016		1869		577		1070
	1020		1872		582		1074
	1025		1875		585		1078
	1029		1894		589		1080
	1034		1993		592		1082
	1038		2067		595		1085

PART NUMBER INDEX

Part	Page
	1088
	1090
	1092
	1096
	1100
	1105
	1109
	1113
	1118
	1122
	1126
	1132
	1135
	1137
	1139
	1141
	1143
	1167
	1169
	1170
	1172
	1174
	1176
	1286
	1290
	1292
	1296
	1304
	1309
	1313
	1343
	1364
	1367
	1407
	1411
	1424
	1426
	1432
	1435
	1437
	1467
	1472
	1477
	1483
	1490
	1497
	1564
	1566
	1569
	1724
	1774
	1777
	1781
	1785
	1838
	1841
	1858
	1860
	1863
	1866
	1869
	1872
	1875
	1906
8T-4138	292
	294
	394
	395
	397
	398
	400
	487
	493
	501
	512
	518
	534
	542
	549
	555
	561
	568
	577
	672
	1697
	1726
	1768
	1771
	1807
	1819
	1890
	1894
	1899
8T-4139	161
	164
	190
	192
	194
	196
	280
	284
	288
	313
	315
	317
	482
	549
	555
	568
	577
	618
	625
	630
	638
	689
	694
	699
	740
	744
	748
	753
	757
	764
	767
	771
	778
	785
	891
	892
	893
	895
	897
	899
	921
	922
	947
	950
	968
	971
	974
	983
	987
	991
	993
	994
	1007
	1012
	1016
	1020
	1025
	1029
	1034
	1038
	1042
	1046
	1050
	1056
	1070
	1074
	1078
	1092
	1096
	1100
	1105
	1109
	1113
	1118
	1122
	1126
	1135
	1137
	1158
	1286
	1296
	1304
	1313
	1347
	1351
	1355
	1360
	1407
	1467
	1472
	1477
	1483
	1490
	1497
	1527
	1529
	1564
	1573
	1576
	1579
	1583
	1587
	1592
	1597
	1618
	1627
	1640
	1838
	1841
	1982
	2067
	2072
	2075
	2078
	2081
	2084
8T-4140	395
	397
	398
	740
	761
	767
	771
	1407
	1446
	1449
	1452
	1455
	1458
	1460
	1467
	1472
	1515
	1519
	1521
	1523
	1525
	1526
	1531
	1533
	1535
	1537
	1573
	1576
	1579
	1583
	1587
	1592
	1597
	1610
	1614
	1622
	1632
	1688
	1993
8T-4149	689
	694
	699
8T-4154	333
8T-4167	1688
8T-4172	807
	1339
	1343
	1407
	1411
	1592
	1597

► PRIMARY REFERENCE

PART NUMBER INDEX

Part	Page
8T-4173	1407
	1525
	1526
	1527
	1529
	1537
8T-4174	1502
	1505
	1527
	1529
8T-4175	1573
	1576
	1579
	1583
	1587
	1858
8T-4176	767
	771
	778
	785
	792
	799
	807
	1407
8T-4177	454
	1729
8T-4178	33
	779
	785
	792
	799
	807
	942
	1295
	1477
	1483
	1490
	1497
8T-4179	313
	315
	317
	613
	779
	786
	989
	1296
	1838
	1841
	1858
8T-4180	1740
	1743
	1745
	1747
	1749
8T-4181	1740
	1743
	1745
	1747
	1749
8T-4182	235
	239
	243
	247
	518
	764
	1296
	1304
	1477
	1483
	1490
	1497
8T-4183	164
	205
	206
	297
	689
	694
	699
	724
	740
	744
	748
	753
	757
	761
	764
	779
	786
	792
	799
	807
	891
	892
	893
	895
	897
	943
	945
	947
	980
	983
	987
	989
	991
	994
	996
	1286
	1290
	1292
	1296
	1304
	1309
	1313
	1347
	1351
	1355
	1360
	1388
	1392
	1467
	1472
	1502
	1505
	1519
	1521
	1531
	1533
	1535
	1566
	1569
	1838
	1841
8T-4184	201
	983
	1164
	1339
	1343
	1347
	1351
	1355
	1360
	1467
	1472
	1477
	1483
	1490
	1497
	1531
	1533
	1572
	1576
	1579
	1583
	1587
	1600
	1601
8T-4185	252
	582
	585
	774
	968
	971
	974
	1034
	1038
	1042
	1046
	1050
	1056
	1063
	1065
	1068
	1070
	1074
	1080
	1082
	1085
	1088
	1090
	1092
	1100
	1113
	1132
	1135
	1339
	1343
	1364
	1367
	1653
	1724
	1803
	1805
8T-4186	164
	280
	284
	337
	338
	351
	358
	360
	363
	367
	371
	375
	379
	383
	387
	482
	487
	493
	501
	582
	585
	589
	592
	599
	613
	764
	767
	771
	779
	786
	792
	799
	807
	949
	950
	999
	1132
	1165
	1313
	1364
	1367
	1497
	1507
	1592
	1597
	1708
8T-4187	942
	996
8T-4189	163
	235
	239
	243
	247
	329
	472
	659
	660
	672
	689
	694
	699
	1320
	1322
	1324
	1703
	1704
	1890

PART NUMBER INDEX

Part	Page
	1899
8T-4191	921
	922
	1092
	1096
	1100
	1105
	1109
	1113
	1119
	1123
	1126
	1347
	1351
8T-4192	284
	315
	317
	482
	555
	568
	577
	779
	786
	792
	799
	807
	941
	950
	983
	1007
	1012
	1016
	1020
	1025
	1029
	1034
	1038
	1042
	1046
	1050
	1056
	1296
	1304
	1313
	1364
	1367
	1573
	1576
	1579
	1583
	1587
	1610
	1622
	1632
	1838
	1841
8T-4193	641
	643
	647
	649
	651
	935
	942
	1446
	1449
	1467
	1472
	1502
	1505
	1573
	1576
	1579
	1583
	1587
	1592
	1856
	1857
	1859
8T-4194	619
	625
	630
	689
	694
	699
	779
	786
	792
	799
	807
	887
	966
	983
	991
	1164
	1347
	1351
	1355
	1360
	1411
	1446
	1449
	1452
	1455
	1458
	1460
	1502
	1505
	1614
	1993
8T-4195	159
	160
	161
	164
	167
	170
	173
	176
	190
	192
	194
	196
	198
	204
	220
	232
	235
	239
	243
	247
	256
	280
	318
	371
	375
	379
	383
	387
	390
	391
	392
	582
	585
	589
	592
	599
	613
	619
	625
	630
	638
	724
	740
	748
	761
	771
	779
	786
	846
	848
	851
	853
	856
	860
	863
	868
	900
	902
	904
	906
	909
	943
	945
	947
	950
	953
	968
	971
	974
	980
	983
	987
	989
	991
	994
	1001
	1004
	1007
	1012
	1016
	1020
	1025
	1029
	1034
	1038
	1042
	1046
	1050
	1056
	1070
	1074
	1078
	1080
	1082
	1088
	1090
	1093
	1096
	1100
	1105
	1109
	1113
	1119
	1123
	1126
	1162
	1163
	1172
	1286
	1313
	1347
	1351
	1355
	1360
	1364
	1367
	1467
	1472
	1483
	1490
	1497
	1509
	1511
	1513
	1563
	1592
	1597
	1614
	1768
	1771
	1774
	1777
	1781
	1785
	1798
	1799
	1800
	1813
	1815
	1890
	1899
	1906
	2084
8T-4196	161
	534
	543
	549
	555
	561
	568
	577

► PRIMARY REFERENCE

PART NUMBER INDEX

Part	Page	Part	Page	Part	Page	Part	Page
	586		493		288		989
	589		501		297		1007
	592		512		313		1012
	599		523		315		1016
	689		534		317		1020
	694		542		358		1025
	740		549		394		1029
	761		554		400		1034
	767		555		427		1038
	771		560		482		1042
	824		561		487		1046
	1001		566		493		1050
	1004		568		501		1057
	1080		574		512		1132
	1082		577		523		1135
	1088		1618		534		1284
	1090		1622		543		1285
	1290		1627		549		1286
	1292		1632		555		1290
	1296		1697		561		1292
	1304		1716		568		1296
	1313		1718		577		1304
	1339		1736		601		1309
	1343		1738		603		1313
	1347		1768		619		1338
	1351		1771		625		1342
	1360		1880		630		1347
	1432		1882		638		1351
	1435		1885		689		1355
	1437		1890		694		1360
	1467		1894		699		1364
	1472		1899		744		1367
	1477		1909		748		1376
	1483		1912		753		1388
	1490		1915		757		1392
	1497		1919		761		1407
	1566		1923		764		1411
	1569	8T-4219	1062		767		1442
8T-4200	182		1064		771		1446
	454		1067		779		1449
	641		1084		786		1452
	643		1131		792		1455
	647	8T-4222	159		799		1458
	649		160		807		1460
	651		161		824		1467
	1899		164		846		1472
8T-4205	276		968		848		1477
	371		971		851		1483
	375		974		853		1490
	379		1167		857		1497
	383		1169		900		1502
	387		1170		902		1505
	390	8T-4223	77		904		1519
	391		161		912		1521
	392		164		915		1527
	394		201		921		1529
	395		212		922		1531
	397		221		935		1533
	398		235		941		1564
	400		239		950		1566
	444		243		966		1569
	449		247		968		1573
	465		278		971		1576
	467		280		974		1579
	487		284		983		1583

PART NUMBER INDEX

Part	Page
	1587
	1592
	1597
	1600
	1601
	1614
	1618
	1627
	1838
	1841
	1858
	1993
	2067
	2072
	2075
	2078
	2081
	2084
8T-4224	163
	182
	235
	239
	243
	247
	276
	280
	284
	297
	333
	334
	349
	351
	353
	355
	356
	371
	375
	379
	383
	406
	407
	408
	409
	454
	472
	482
	487
	494
	501
	512
	523
	531
	534
	543
	549
	555
	561
	568
	577
	641
	643
	647
	649
	651
	659
	660
	672
	689
	694
	699
	846
	848
	851
	853
	857
	876
	953
	980
	983
	987
	989
	994
	997
	999
	1167
	1172
	1174
	1176
	1286
	1320
	1322
	1324
	1364
	1367
	1703
	1704
	1729
	1757
	1768
	1771
	1790
	1794
	1795
	1832
	1854
	1890
	1894
	1899
8T-4226	1162
	1163
8T-4244	199
	278
	280
	313
	487
	494
	501
	512
	522
	534
	543
	549
	561
	619
	625
	630
	779
	786
	793
	799
	807
	968
	971
	974
	983
	987
	994
	1284
	1285
	1286
	1296
	1304
	1313
	1363
	1366
	1411
	1515
	1523
	1527
	1529
	1899
8T-4648	199
	427
	779
	786
	793
	799
	968
	971
	974
	1347
	1351
	1355
	1360
	1477
	1483
	1490
	1497
	1502
	1505
	1573
	1576
	1579
	1583
	1587
	1592
	1597
8T-4747	1740
	1743
	1745
	1747
	1749
8T-4779	935
	1337
	1407
	1446
	1449
	1452
	1455
	1458
	1460
	1502
	1505
	1519
	1521
	1525
	1526
	1531
	1533
	1535
	1537
	1592
	1597
8T-4835	278
8T-4896	182
	213
	223
	225
	227
	229
	291
	319
	568
	577
	582
	585
	589
	592
	595
	597
	599
	601
	603
	900
	902
	904
	1388
	1391
8T-4908	280
	284
	482
	853
	857
	1167
8T-4910	161
	164
	212
	394
	400
	427
	767
	771
	779
	786
	793
	799
	807
	968
	971
	974
	983
	987
	991
	994
	1502
	1505
8T-4935	929
	932
	959
	1590

PART NUMBER INDEX

Part	Page
	1595
8T-4956	164
	740
	767
	771
	779
	786
	793
	799
	807
	846
	848
	851
	853
	857
	915
	935
	940
	1007
	1012
	1016
	1020
	1025
	1029
	1034
	1038
	1042
	1046
	1051
	1057
	1132
	1286
	1296
	1304
	1313
	1347
	1351
	1355
	1360
	1407
	1442
	1467
	1472
	1502
	1505
	1592
	1597
8T-4967	1686
8T-4970	465
	467
	1710
	1713
	1716
	1718
8T-4971	909
	1710
	1713
	1743
	1745
8T-4983	179
	184
8T-4986	1465
	1470
8T-4994	680
	682
	684
	686
	1132
	1135
	1472
8T-5001	966
	1319
8T-5004	911
8T-5005	408
	409
	740
	744
	748
	753
	757
	761
	764
	767
	771
	1132
	1167
	1296
	1304
	1313
	1407
	1424
	1477
	1483
	1490
	1497
	1774
	1777
	1781
	1785
8T-5027	1768
8T-5041	1338
	1376
8T-5070	1413
	1415
	1417
	1419
8T-5400	1909
	1912
	1915
	1919
	1923
8T-5412	1600
	1601
8T-5413	1157
8T-5432	549
	555
	561
	568
	577
8T-5436	1605
	1610
	1618
	1622
	1627
	1632
	1707
8T-5439	837
	838
	950
	996
	1316
	1317
	1544
	1561
8T-5460	266
	966
8T-5463	1816
	1818
	1819
8T-5677	628
	635
	1285
8T-5913	1906
8T-5914	1906
8T-6381	134
	838
8T-6383	297
8T-6385	1521
	1525
	1526
	1533
	1535
	1537
8T-6411	371
	375
	379
	383
	387
	390
	391
	392
8T-6430	837
	838
	914
	915
	1332
	1333
8T-6466	167
	170
	173
	176
	198
	280
	284
	288
	619
	625
	630
	638
	744
	748
	753
	757
	807
	968
	971
	974
	983
	1172
	1296
	1304
	1313
	1347
	1351
	1355
	1364
	1367
	1467
	1472
	1618
	1622
	1627
	1632
	1774
	1777
	1781
	1785
	2067
	2072
	2075
	2078
	2081
	2084
8T-6631	1697
8T-6684	688
	694
	699
8T-6696	1406
8T-6725	1993
8T-6757	59
	62
	65
	207
8T-6761	179
8T-6765	199
8T-6767	179
8T-6842	1768
	1860
8T-6850	1993
8T-6868	331
	332
	767
	771
	779
	786
	793
	799
	807
	974
8T-6869	235
	239
	243
	247
	330
	335
	336
	349
	351
	353
	355
	356
	371
	375
	379
	383
	512
	641
	643
	647
	649

PART NUMBER INDEX

Part	Page
	680
	682
	684
	686
	851
	857
	876
	1592
	1597
8T-6870	1364
	1367
	1757
8T-6876	198
	1147
	1320
	1322
	1324
	1338
	1342
	1591
	1596
8T-6895	1466
	1471
8T-6911	929
	932
8T-6912	408
	409
	560
	848
	851
	853
	857
	953
	1757
8T-6974	605
	608
	613
8T-6991	966
8T-7038	2088
8T-7062	24
	25
8T-7087	1358
	1407
8T-7338	846
	848
	851
	853
	857
	937
	1347
	1351
	1355
	1360
	1525
	1526
	1537
8T-7488	1993
8T-7520	1465
	1470
8T-7525	1551
	1553
8T-7529	807
	1788
8T-7535	1332
	1333
8T-7546	1476
8T-7547	297
	334
	408
	409
	689
	694
	699
	953
	1832
8T-7566	1822
	1825
	1826
8T-7927	739
	760
8T-7930	278
8T-7934	1139
	1141
	1143
	1707
8T-7963	1768
8T-7964	1736
	1738
8T-8442	1551
	1553
8T-8667	641
8T-8729	454
	518
	522
	523
	574
	598
	635
	636
	664
	666
	884
	1320
	1342
	1439
	1657
	1727
	1735
	1801
	1803
	1810
	1903
8T-8730	365
	419
	441
	521
	574
	635
	636
	651
	1682
	1683
	1684
	1685
8T-8731	419
	605
	617
	624
8T-8732	433
	647
	651
8T-8737	32
	223
	229
	363
	378
	379
	386
	440
	470
	475
	479
	482
	484
	485
	486
	491
	498
	508
	509
	510
	511
	519
	520
	521
	523
	534
	567
	574
	575
	582
	598
	601
	603
	605
	612
	617
	618
	635
	636
	651
	654
	657
	850
	856
	879
	1413
	1415
	1417
	1419
	1679
	1680
	1681
	1682
	1683
	1684
	1685
	1697
	1709
	1724
	1735
	1766
	1767
	1803
	1807
	1809
	1810
	1811
	1812
	1846
	1850
	1851
	1923
8T-8827	595
	597
8T-8874	485
	492
	499
	509
	522
8T-8887	1338
	1342
8T-8899	1296
	1304
	1313
8T-8900	693
	698
8T-8901	1475
	1481
	1488
	1495
8T-8919	1542
	1543
8T-9082	1827
	1880
	1882
8T-9358	657
	1080
	1082
	1084
	1088
	1090
	1131
	1134
8T-9371	1903
8T-9377	585
	589
	592
	599
8T-9397	680
	682
	684
	686
8T-9522	1645
	1647
	1648
8T-9527	78
8T-9530	1946
	1954
	1979
8T-9655	234
	238
	242
	246
	295
	296
	533
	541
	548
	554

► PRIMARY REFERENCE

PART NUMBER INDEX

Part	Page
	559
	560
	566
	574
	1807
8T-9757	279
	283
8T-9834	486
	493
	500
	509
	521
8V-3609	1280
	1281
8V-5386	830
	832
8V-6879	1322
8W-2555	1264
	1265
	1266
8W-2597	1186
	1212
	1214
	1223
	1225
	1233
	▶1265
8W-2966	1592
	1605
	1618
	1626
8X-0674	966
8X-1106	1237
	1238
	1239
	1245
	1247
	1249
	1250
	1253
	1254
	1255
	1260
	1262
	1263
	1264
	1265
	1266
8X-2323	1174
	1176
8X-3467	1363
	1366
8X-4086	828
	829
8X-4711	932
8X-4719	1502
	1505
8X-4886	766
	770
	777
	784
	791
	798
	805
8X-5803	484

Part	Page
	491
	498
	508
	522
8X-5963	963
8X-6166	710
8X-6973	170
	173
8X-9227	1082
	1088
8Y-3966	909
8Y-3998	909
8Y-3999	909
8Y-4489	1838
8Y-4501	1743
	1745
	1747
	1749
8Y-5743	943
	945
	947
8Y-5746	1890
	1894
8Y-6277	1880
8Y-6333	1890
	1894
8Y-6352	1754
8Y-6364	2092
8Y-6386	1740
	1743
	1745
	1747
	1749
8Y-6388	1752
	1754
8Y-8306	909

9

Part	Page
9B-0453	1284
	1285
9B-7233	534
	542
	549
	555
	560
	561
	568
	576
9B-7237	213
	278
9C-1079	1465
9C-2235	982
9C-2399	766
	770
9C-4935	929
	932
9C-5344	949
9C-6809	929
	932
	958
	959
	960
	1668

Part	Page
	1670
9C-7863	924
	926
	929
	932
	950
9C-7929	961
	982
9D-0630	220
	221
9D-1829	748
	753
	757
9D-4439	566
	574
9D-6134	942
9D-7924	805
9F-2167	1280
	1281
9F-2247	1993
9F-3788	811
9F-5599	444
	449
9F-5644	453
9F-6641	1380
9F-7283	1467
	1472
9F-8125	484
	491
	498
	508
	522
9F-9327	549
	561
9G-0003	279
	283
	287
9G-0004	279
	283
	287
9G-0278	1602
9G-1307	1813
	1815
9G-1950	1697
9G-2673	487
	494
	501
	512
	518
9G-3695	664
	667
	1729
9G-4101	444
	445
	449
	450
9G-4224	533
	541
9G-4343	548
	554
	566
	575
9G-4733	1617
	1621
	1626

Part	Page
	1631
9G-5321	887
9G-8140	1001
9G-8451	533
	541
9G-9288	950
	1561
	▶2062
9H-1031	48
	50
9H-3757	444
	449
9H-5537	812
9H-6454	1566
	1569
9H-6832	887
9J-3047	1566
	1569
9J-3866	1131
	1294
	1302
	1311
	1475
	1481
	1488
	1495
9J-7031	734
	1566
	1569
9J-9600	2042
9J-9821	1389
	1392
9K-0803	966
9L-1775	1774
	1777
	1781
	1785
9L-5854	49
	51
	52
9L-6770	276
9L-7494	727
9L-8439	138
9L-8925	27
	29
	30
	31
	32
9L-9188	1604
	1609
	1614
	1617
	1621
	1626
	1631
9M-0164	136
	145
9M-0853	139
	141
	143
	147
9M-1503	811
9M-1974	38
	77

▶ PRIMARY REFERENCE

PART NUMBER INDEX

Part	Page
	184
	295
	296
	410
	412
	680
	682
	684
	686
	882
	885
	1556
9M-2076	1280
	1281
9M-2095	811
9M-2904	76
9M-3786	189
9M-4007	860
	862
	867
9M-4313	881
9M-4355	811
9M-4370	824
9M-5024	712
9M-5870	487
	494
	501
	512
	518
9M-5884	1844
9M-5894	1413
	1415
	1417
	1419
	1422
	1423
	1428
	1430
9M-6097	677
9M-6527	187
9M-7394	2062
9M-7609	444
9M-7783	291
9M-7958	167
9M-8406	235
	239
	243
	247
	280
	605
	608
	641
	643
	647
	649
	651
	1004
	1034
	1038
	1042
	1070
	1074
	1101
	1113
	1697
	1774
	1777
	1781
	1785
9N-0869	235
	239
	243
	247
	295
	296
	534
	543
	549
	555
	560
	561
	569
	577
	672
	1754
	1771
	1807
	1890
9N-2038	214
	218
	219
9N-3167	107
	109
9N-3666	319
9N-4452	2051
9N-4453	2043
9N-4552	2048
9N-4561	▶2058
9N-4562	▶2050
9N-4563	▶2051
9N-4564	▶2052
9N-5253	323
	616
9N-6108	113
9P-0719	501
	518
9P-5531	812
9P-6476	860
	862
	867
9P-7121	267
	269
9R-1733	559
	617
	924
	926
	956
	958
9R-2613	406
	407
	408
	744
	891
	892
	895
	921
	922
	924
	926
	929
	932
	963
	968
	971
	974
	1016
	1020
	1162
	1163
	1475
	1481
	1488
	1495
	1838
	1844
9R-2640	924
	926
	961
	1675
9R-2821	1668
	1672
	1676
	1677
	1678
	1686
	1863
	1872
	1875
9R-4595	929
	932
	959
	963
	964
	1674
	1675
	1676
	1677
	1678
	1838
9R-5008	1605
	1610
	1617
	1621
	1626
	1631
9R-7123	1858
9R-7996	1617
	1621
	1626
	1631
9R-8185	942
9R-8538	909
	1743
	1745
9S-1343	811
9S-2544	444
	449
9S-4167	223
	225
	227
	229
9S-4180	1605
	1610
	1617
	1621
	1626
	1626
	1631
	1653
9S-4181	677
	723
	846
	848
	850
	853
	856
	924
	926
	1330
	1547
	1556
9S-4182	171
	402
	403
	404
	1388
	1391
	1476
	1482
	1489
	1496
	1604
	1609
	1617
	1621
	1626
	1631
9S-4183	1466
	1471
9S-4185	723
	868
	1364
	1367
9S-4190	234
	238
	242
	246
9S-4191	710
	719
	723
	813
	846
	848
	850
	853
	856
	1278
	1346
	1350
	1354
	1359
	1388
	1391
	1505
	1547
	1556
	1604
	1609
	1617
	1621
	1626

▶ PRIMARY REFERENCE

PART NUMBER INDEX

Part	Page
	1631
	1649
	1650
	1653
9S-4205	676
	677
9S-4368	860
	863
	868
9S-4372	860
	862
	867
9S-6130	1653
9S-7712	1001
	1004
9S-7949	727
9S-7950	727
9S-8001	1328
	1604
	1610
9S-8002	117
	179
	184
	208
	1276
	1391
	1547
	1551
	1553
	1556
	1605
	1610
	1617
	1622
	1627
	1632
9S-8003	1590
	1595
9S-8004	70
	73
	119
	139
	141
	143
	231
	712
	1388
	1391
	1399
	1401
	1403
	1604
	1609
	1614
	1617
	1621
	1626
	1631
	1640
9S-8005	117
	119
	179
	184
	223
	225
	227
	229
	250
	252
	257
	258
	722
	887
	1371
	1662
	1663
9S-8006	55
	57
	117
	119
	139
	141
	143
	1541
	1551
	1553
9S-8007	1605
	1610
9S-8008	184
	812
	1373
	1388
	1391
9S-8010	118
	1388
	1391
9S-8752	78
	85
	93
	95
	106
	114
	139
	141
	143
	259
	260
	1176
9S-9334	107
	109
	185
	267
	269
	1604
	1609
	1617
	1621
	1626
	1631
9T-0818	950
	1561
9T-1013	1470
9T-1258	1371
9T-3096	1363
	1366
	1572
	1575
	1578
	1582
	1586
	▶1603
9T-3752	877
	1475
	1481
	1488
	1495
9T-4735	1709
9T-5134	693
	698
	766
9T-6943	929
	932
9T-7419	1388
	1391
	1539
9T-9226	1566
	1569
9T-9227	1566
	1569
9T-9992	1642
	1643
	1644
	1645
	1647
	1648
9U-0560	371
	375
	379
	387
9U-0561	370
	374
	378
	386
9U-0585	1667
	1686
	1687
9U-0830	1285
	1758
	1760
9U-0853	924
	926
9U-0952	1890
	1894
9U-0953	1890
	1894
9U-0954	1890
	1894
9U-0955	1890
	1894
9U-1169	1751
9U-1469	283
	287
9U-1793	929
	932
9U-2277	370
	374
	378
	382
	386
	472
	605
	766
	770
9U-2331	1761
9U-2332	1763
9U-3430	1359
9U-3925	1890
	1894
	1899
9U-3926	1890
	1894
	1899
9U-3927	1899
9U-3928	830
	832
9U-4431	1761
	1763
9U-8263	1761
9V-3659	911
9W-0844	378
	379
	398
	400
	511
	521
	574
9W-0852	378
	379
	484
	485
	491
	498
	508
	509
	511
	523
	574
	1697
9W-1377	▶1926
9W-1572	811
9W-1579	812
9W-1698	1431
9W-1951	485
	492
	499
	511
	519
9W-1991	512
9W-2977	811
9W-3416	287
9W-3460	287
9W-3723	287
9W-3898	813
9W-4361	351
	370
	374
	378
	382
9W-5568	882
	885
9W-5731	1984
	2001
	▶2009
9W-5732	1984
	2001
	2009
9W-5733	1984
	2001
	2009
9W-5734	1984

▶ PRIMARY REFERENCE

PART NUMBER INDEX

Part	Page
	2001
9W-5735	1984
	2001
	►2009
9W-5736	1984
	2001
	2009
9W-6582	134
	837
	838
9W-6584	134
	837
9W-8297	813
9W-8298	812
9W-8394	319
9W-8451	2058
9W-8452	2050
9W-8459	2052
9W-8551	2057
9W-8552	2049
9W-9856	813
9W-9930	134
	837
	838
9X-0141	485
	492
	499
	511
	519
9X-0196	510
	628
	635
9X-0261	641
	643
	647
9X-0262	410
	412
9X-1046	487
	494
	501
	512
	522
	1830
9X-1054	533
	541
	548
	559
	567
	575
9X-1056	567
	575
9X-1343	486
	493
	500
	509
	521
9X-1386	434
	585
	589
	592
	598
	1413
	1415
	1417
	1419
	1729
9X-1813	414
	418
	419
	420
	421
	425
	428
	429
	432
	440
	452
	456
	460
	461
	1338
	1342
	1439
	1441
9X-2026	1710
	1713
9X-2027	292
	294
	1085
	1088
	1090
	1093
	1101
	1113
	1132
	1135
	1890
	1894
9X-2038	26
	1716
	1718
	1768
	1771
	1890
	1894
	1899
9X-2039	1752
9X-2040	1694
	1695
	1752
	1807
9X-2041	292
	294
	1844
	1860
9X-2042	535
	543
	549
	555
	560
	561
	569
	577
	1710
	1713
	1734
	1752
	1803
	1805
	1860
	1863
	1866
	1869
	1872
	1875
9X-2043	1899
9X-2044	549
	555
	561
	569
	577
	1710
	1714
	1716
	1718
	1740
	1743
	1745
	1747
	1749
	1860
	1863
	1866
	1869
	1890
	1894
9X-2045	1716
	1718
	1734
	1768
	1803
	1805
9X-2046	1768
	1771
	1816
	1818
9X-2085	1993
9X-2125	1564
9X-2129	2093
9X-2133	167
	170
	173
9X-2145	822
9X-2158	824
9X-2185	1697
9X-2205	221
	267
	269
9X-2289	777
	784
	800
	805
9X-2299	906
	1751
9X-2327	743
	747
	752
	823
9X-2370	76
9X-2383	529
	636
9X-2404	887
9X-2480	487
	494
	501
	512
	518
	659
	660
9X-2488	319
	1697
	1792
	1794
	1795
9X-2492	1590
9X-2498	1763
9X-2532	1908
9X-2533	1908
9X-2614	1466
	1471
9X-2616	1890
	1894
9X-2647	744
9X-3132	521
9X-3265	519
	1803
	1805
9X-3401	27
	229
	363
	386
	414
	418
	428
	509
	510
	511
	519
	520
	521
	529
	567
	575
	612
	635
	636
	651
	1413
	1415
	1729
	1807
9X-3402	363
	386
	459
	482
	509
	510
	511
	519
	520
	521
	522
	529
	567
	575
	598
	612
	636
	637
	651

► PRIMARY REFERENCE

PART NUMBER INDEX

Part	Page
	1807
9X-3463	328
	333
	334
	339
9X-3490	519
9X-3495	605
	617
	624
	641
	643
	647
	649
	651
9X-3579	1417
	1419
	1428
	1430
9X-4008	209
9X-4244	333
	334
9X-4493	370
	374
	378
	382
	386
9X-4597	966
9X-4599	1688
9X-4601	1688
9X-4605	860
	863
	868
9X-4609	882
	885
9X-4997	598
9X-4998	598
9X-6015	743
	747
	752
	756
	763
9X-6017	1413
	1415
	1417
	1419
9X-6032	1347
	1351
	1355
	1360
9X-6165	331
	332
	487
	494
	501
	512
	523
	527
	528
	577
9X-6258	454
9X-6269	6
	1590
	1595
9X-6395	1329
	1385
	1641
	1652
9X-6458	40
	85
	112
	114
	138
	149
	150
	151
	152
	179
	185
	235
	239
	243
	247
9X-6580	689
	694
	699
	1477
	1483
	1490
	1497
9X-6626	1816
	1818
	1819
9X-6762	287
9X-6763	280
	284
9X-6772	353
	386
	474
	475
	477
	479
	480
	481
	482
	485
	492
	499
	510
	511
	512
	519
	524
	525
	527
	528
	531
	533
	541
	548
	554
	559
	560
	566
	574
	582
	585
	589
	592
	595
	598
	605
	608
	612
	617
	618
	624
	625
	628
	629
	635
	637
	641
	643
	647
	649
	651
	654
	655
	657
	670
	672
	680
	684
	766
	770
	850
	856
	1131
	1338
	1342
	1405
	1590
	1595
9X-6856	511
	519
	567
	575
	636
9X-6857	511
	519
	598
	637
9X-7145	486
	493
	500
	509
	521
9X-7146	485
	492
	499
	511
	519
9X-7317	261
	262
	263
9X-7344	654
	655
9X-7378	582
	585
	589
	592
	599
	1706
9X-7380	1774
	1777
	1781
	1785
9X-7381	1774
	1777
	1781
	1785
	1788
	1790
9X-7382	1774
	1777
	1781
	1788
	1790
9X-7383	1774
	1777
	1781
	1785
	1788
	1790
9X-7384	1774
	1777
	1781
	1785
	1788
	1790
9X-7385	1706
	1785
9X-7418	262
9X-7419	262
9X-7430	59
	62
	65
9X-7680	1551
	1553
9X-7722	1371
9X-7737	460
	461
9X-7743	727
9X-7849	344
9X-8139	344
9X-8250	597
	619
	625
	630
	638
	2067
	2072
9X-8256	267
	269
	292
	294
	349
	353
	365
	408
	409
	529
	535
	543
	549
	555
	561
	569
	577
	605

PART NUMBER INDEX

Part	Page
	608
	613
	630
	638
	659
	660
	670
	672
	953
	997
	999
	1001
	1004
	1007
	1012
	1016
	1020
	1025
	1029
	1078
	1096
	1105
	1109
	1119
	1123
	1126
	1286
	1407
	1734
	1807
	1813
	1815
9X-8257	641
	643
	647
	649
	651
	767
	771
	779
	786
	793
	799
	807
	810
	838
	846
	848
	851
	853
	857
	937
	1324
	1347
	1351
	1355
	1360
	1407
	1446
	1449
	1452
	1455
	1458
	1460
	1467

Part	Page
	1472
	1502
	1505
	1515
	1519
	1521
	1523
	1525
	1526
	1527
	1529
	1531
	1533
	1535
	1537
	1573
	1576
	1579
	1583
	1587
	1592
	1597
	1688
9X-8258	891
	892
	893
	895
	897
	1688
9X-8259	1688
9X-8268	680
	682
	684
	686
	731
	735
	753
	757
	764
	846
	1547
	1555
9X-8281	1890
	1893
	1894
9X-8399	712
	717
9X-8408	1286
	1296
	1326
9X-8498	1697
9X-8582	1001
9X-8600	221
	267
	269
9X-8872	84
9X-8873	179
	185
	730
	734
9X-8874	730
	734
9X-8875	731
	735
9X-8878	135

Part	Page
9X-8917	1727
	1803
	1805
	2093
9X-9120	549
	554
	560
	566
	575
9X-9896	331
	332
9Y-1792	157
9Y-4104	179
	184
9Y-6089	88
	90
9Y-9236	167
	170
	173
	176

0

Part	Page
000-7244	319
002-0639	1093
	1097
	1101
	1106
	1118
	1122
	1141
	1143
	1252
002-6453	1172
	1174
	1176
002-6454	1172
	1174
	1176
003-2143	1231
	1237
005-4362	227
	229
005-8593	1614
006-0136	1546
	1555
006-8350	719
008-3214	1371
009-3101	1274
	1276
	1283
011-7960	1761
012-0380	456
013-8502	1899
030-1712	549
	554
	566
	575
030-4605	1399
	1401
	1403
	1546
	1555
030-7946	77

Part	Page
030-7947	250
	252
	254
	680
	682
	684
	686
	727
030-8188	223
	225
030-8539	727
031-0214	1854
031-3185	85
031-4155	39
031-9295	280
	284
	287
	482
032-3506	1172
	1174
	1176
032-9313	121
	1642
	1643
	1644
033-5853	117
	208
033-5879	1661
033-6033	272
	273
	723
	1646
	1651
	1661
033-6039	1373
033-6042	250
	252
	254
	257
	1371
033-6043	1638
033-8248	351
	363
	370
	374
	378
	382
	387
	477
	479
	480
	481
	482
	534
	542
	549
	554
	560
	568
	576
	582
	605
	608
	618
	625

► **PRIMARY REFERENCE**

PART NUMBER INDEX

Part	Page
	629
	637
	680
	684
034-3557	730
	734
036-9821	444
038-3967	1774
	1777
	1781
	1785
039-8557	234
	238
	242
	246
045-4065	445
	450
061-7208	167
	170
	173
	176
061-8639	121
	123
	124
	125
	126
	130
061-9455	38
065-5071	509
	510
	511
067-9425	204
068-0592	747
	752
	756
	763
068-8579	403
	404
068-8993	1697
069-2535	1272
	1273
070-0617	1179
	1181
	1231
070-0618	1186
	1195
	1212
	1216
	1227
	1229
	1230
	1250
077-3790	1371
077-4643	1371
083-4419	1551
	1553
085-8091	1350
	1354
	1359
087-5841	1564
087-6059	1858
090-8247	1564
091-0081	246
	612
	618
	625
	629
	637
091-1735	1673
	1674
	1675
	1676
	1677
	1678
091-1745	1324
091-9035	254
092-7385	763
093-0349	1332
	1333
093-2065	1062
	1064
	1067
	1084
	1131
095-0670	1551
	1553
095-0690	1541
095-0758	1899
095-0843	1880
	1882
	1885
095-0879	1413
	1415
	1417
	1419
095-0939	1375
095-0942	1373
095-1519	1382
095-1678	722
	723
095-1750	1637
095-1751	1655
095-9804	1604
	1609
	1617
	1621
	1626
	1631
096-0008	1546
	1555
096-0015	1560
096-0067	1758
	1760
096-1331	824
096-4883	982
096-5962	486
	493
	500
	512
	523
	1727
096-6166	1572
	1575
	1578
	1582
	1586
	1590
	1595
096-9986	1355
	1359
	1841
097-4896	774
097-7234	511
	519
097-9169	1709
098-5747	1899
098-8968	484
	491
	498
	508
	523
099-3095	822
	1319
099-3649	1282
	1890
	1894
1	
100-3098	40
100-3866	938
	942
100-4311	►419
	641
	643
	647
	649
	651
100-4995	201
100-5041	567
	575
100-5072	261
	262
	263
100-5218	27
	29
	30
	31
100-5219	27
	29
	30
	31
100-5621	2065
	2066
100-6731	1617
	1621
	1626
	1631
100-7399	53
	55
	57
101-0003	1903
101-0852	299
	300
	307
	308
	311
101-1785	1722
	1723
101-2862	1541
101-2867	1768
	1771
	1854
101-3120	211
101-3125	199
101-3846	1320
	1322
101-6596	77
101-7404	256
	318
	699
101-8468	85
101-9083	680
	684
	686
	777
	784
	791
	798
	805
	1497
	2078
	2084
101-9345	2007
101-9435	2007
101-9436	2007
101-9437	2007
101-9878	840
102-2244	1413
	1415
	1417
	1419
102-2828	1441
102-4156	1604
	1609
	1617
	1621
	1626
	1631
102-4157	1604
	1609
	1621
	1626
	1631
102-4158	1604
	1609
	1617
	1621
	1626
	1631
102-5861	85
102-8801	27
	32
	477
	486
	492
	493
	500
	509
	527
	528
	533
	534
	541
	542
	559
	567
	575
	618

► PRIMARY REFERENCE

PART NUMBER INDEX

Part	Page
	625
	628
	636
	1697
	1724
	1803
	1805
	1807
102-8802	275
	342
	343
	344
	345
	428
	429
	452
	456
	460
	471
	473
	475
	477
	479
	480
	481
	485
	486
	492
	493
	499
	500
	510
	511
	518
	521
	522
	529
	533
	541
	548
	559
	567
	575
	582
	585
	589
	592
	598
	601
	603
	605
	608
	612
	617
	624
	628
	636
	641
	643
	647
	651
	654
	655
	669
	884
	1405
	1439
	1441
	1657
	1697
	1706
	1709
	1710
	1713
	1903
102-8803	223
	225
	229
	326
	341
	414
	415
	416
	417
	418
	425
	427
	432
	434
	454
	458
	468
	474
	477
	485
	486
	492
	493
	499
	500
	508
	509
	510
	519
	520
	522
	601
	603
	605
	608
	612
	617
	624
	628
	635
	636
	643
	647
	649
	651
	657
	664
	666
	667
	879
	1285
	1320
	1338
	1342
	1709
	1713
	1803
	1805
102-8804	484
	485
	486
	491
	492
	498
	499
	508
	509
	510
	519
	523
	605
	608
	612
	617
	624
	628
	629
	636
	664
	666
	667
	1413
	1415
	1417
	1419
	1729
	1763
102-8805	363
	370
	374
	378
	379
	382
	386
	475
	485
	492
	499
	508
	509
	510
	518
	523
	605
	608
	612
	617
	624
	628
	629
	635
	636
	1721
	1735
	1801
	1807
	1809
	1810
	1811
	1812
	1923
102-8806	223
	225
	229
	351
	470
	484
	485
	486
	491
	492
	498
	499
	500
	508
	509
	510
	521
	523
	534
	542
	618
	624
	628
	636
102-8808	1803
102-9089	34
	35
102-9862	394
103-0010	605
	608
	669
	1285
103-0126	84
103-1122	1742
103-1303	1405
	1446
	1449
	1452
	1455
	1458
	1460
	1515
	1519
	1521
	1523
	1531
	1533
	1535
	1590
	1595
103-1328	779
	786
103-2543	549
	555
	561
	569
	577
103-5350	924
	926
	929
	932
	961
	1525
	1526

PART NUMBER INDEX

Part	Page
	1537
	1664
	1665
103-5526	484
	491
	498
	508
	518
	▶1721
103-6100	1774
103-6318	1382
103-6319	1380
	1382
103-7407	1381
103-7410	1381
103-8134	27
	30
	31
	32
104-2091	486
	493
	500
	512
	522
	1752
	1754
104-4255	1380
104-4256	1380
104-4270	1380
104-4271	1380
104-4272	1380
104-4273	1380
104-4274	1380
104-4369	▶2000
104-5013	777
	784
	791
	798
	805
	▶881
104-5014	881
104-5841	2000
104-5888	1324
104-6202	601
	603
104-6729	684
	686
104-7108	1285
	1363
	1366
	1572
	1575
	1578
	1582
	1586
105-2145	1638
105-2976	1709
105-3035	1551
	1553
105-3372	1709
	1713
105-3477	1724
105-3483	297
105-3484	220
	221
105-4728	443
105-4729	23
	▶443
105-6117	1276
105-8029	1727
105-9073	1727
106-0912	1985
	1986
	1987
	1988
	1990
	▶2042
106-0933	835
	836
	873
	874
106-1094	2001
106-1095	2001
106-1096	2001
106-1097	2001
106-1098	2001
106-1582	1709
	1713
106-1583	1713
106-1584	1709
	1713
106-1774	1320
	1322
	1324
	▶1328
106-1792	210
106-3969	202
106-3973	202
106-4155	519
	612
106-4572	190
	192
	194
	196
106-5673	70
	73
106-6220	906
106-6221	906
106-6434	989
106-7798	811
106-9010	900
	902
	904
106-9212	882
	885
107-0266	1752
107-0583	85
107-1984	521
107-2344	1668
	1670
	1672
	1686
107-2884	1371
107-2887	1371
107-2888	1371
107-2889	1371
107-2890	1371
107-2891	1371
107-2893	1371
107-3114	1373
107-3157	1856
	1857
	1859
107-3378	2044
	2048
	2049
	2054
	2057
107-3469	2043
	2050
	2051
	2052
	2053
	2058
107-3490	2001
107-3533	▶2007
107-3536	2007
107-3537	2007
107-3538	2007
107-3545	▶2007
107-3727	534
	542
	549
	554
	560
	568
	576
107-4393	1788
	1790
107-4394	1788
	1790
107-4395	1788
	1790
107-4396	1788
	1790
107-4397	1774
	1777
	1781
	1785
107-4399	1774
	1777
	1781
	1785
107-4600	1860
	1863
	1872
107-4601	1860
	1863
	1872
107-4602	1860
	1863
	1872
107-4603	1860
	1863
	1872
	1875
107-4749	529
	628
	635
	659
	660
	670
107-5769	259
	260
107-6736	13
	15
	17
	▶36
107-7306	1860
	1863
	1872
	1875
107-7308	1752
107-8265	777
	784
	800
	805
107-8559	2044
	2048
	2049
	2054
	2057
107-9172	1280
	1281
108-0122	1413
	1415
	1417
	1419
	1422
	1423
	1428
	1430
108-0358	465
	467
108-1785	1573
	1578
108-2735	811
108-2736	811
108-3320	484
	491
	498
	508
	523
108-3612	210
108-3866	1386
108-4311	1903
108-4441	861
	862
	867
108-7005	1434
108-7550	1346
	1350
	1354
	1359
108-7930	187
108-9382	13
	15
	17
	▶81
108-9422	1777
	1781
	1785
109-0072	149
	150
	151
	152
109-0076	107
	109
109-0077	179
	184

▶ PRIMARY REFERENCE

PART NUMBER INDEX

Part	Page
	189
109-0078	149
	150
	151
	152
109-1641	1319
109-1645	618
	624
	628
	635
109-1657	19
	21
	22
	▶82
109-2373	13
	15
	17
	▶166
109-3969	882
	885
109-5811	1592
	1596
109-5816	1350
	1354
	1359
109-5825	805
109-5839	107
	109
109-5840	109
109-8196	1702
	1703
	1705
	▶1909
	▶1912
	▶1915
	▶1919
109-9051	▶2007
109-9080	2008
	2040
	2041
109-9081	2008
	2040
109-9082	2008
	2040
109-9985	97
110-2023	929
	932
110-2079	484
	491
	498
	508
	521
	1150
	1151
110-2446	1280
	1281
110-2973	1546
	1555
110-3971	1546
110-3978	1546
	1555
110-4215	1830
110-4216	1830
110-4217	1830
110-4218	484
	491
	498
	508
	522
110-4344	98
110-6109	484
	491
	498
	508
	521
110-6393	1694
	1820
	1821
110-6844	520
	567
	575
	636
110-6845	486
	493
	500
	510
	520
	618
	625
	628
	636
110-6846	533
	541
	548
	559
	567
	575
110-6848	533
	541
	548
	567
	575
110-7592	1946
	1954
110-7886	484
	491
	498
110-7887	484
	491
	498
	508
110-8330	250
110-8769	598
110-8826	155
110-8827	155
	156
111-0343	884
	1657
	1659
111-0687	1860
	1863
	1866
	1869
	1872
111-1316	1860
	1863
	1866
	1869
	1872
	1875
111-1353	1745
	1749
111-1354	1740
	1743
	1747
111-1355	1745
	1749
111-1356	1743
	1747
111-2088	13
	15
	17
	▶97
111-2355	13
	15
	17
	▶98
111-4627	1905
111-9110	1272
	1273
111-9289	319
111-9758	1667
	1672
111-9827	319
112-0845	1509
	1511
	1513
112-1817	1572
	1575
	1578
	1582
	1586
	1590
	1595
	▶1636
	1993
112-2276	1274
112-3927	830
	832
112-4511	812
112-4550	433
112-4558	1164
112-5419	1828
112-5421	484
	491
	498
	508
	522
112-5574	1828
112-5927	484
	491
	498
	508
112-5928	484
	491
	498
	508
112-6150	1405
112-6174	484
112-7308	813
112-7309	812
112-7448	1752
112-8244	1604
	1609
	1617
	1621
	1626
	1631
112-9217	85
112-9486	190
	192
	194
	196
112-9861	1636
113-0002	484
	491
	498
	508
	522
113-0580	485
	492
	499
	511
	519
	605
	608
	612
113-0919	1803
	1805
113-2512	1747
	▶1907
113-2513	1749
	▶1908
113-5183	509
	511
	519
	521
113-5184	509
	511
	519
	521
113-6003	1751
113-7752	1274
	1276
113-8113	1697
113-8263	1604
	1609
	1617
	1621
	1626
	1631
113-8490	548
	554
	560
	566
	574
113-8491	548
	554
	560
	566
	574
113-8492	548
	554
	560
	566
	574
114-0359	1986
	1988

▶ PRIMARY REFERENCE

PART NUMBER INDEX

Part	Page
	1990
	2042
114-0464	1997
114-0468	2043
	2050
	2051
	2052
	2053
	2058
114-3466	1752
114-4244	1709
	1713
114-4247	1709
	1713
114-5121	1
	2
	▶1148
114-5124	1
	2
	▶1838
	▶1841
114-5125	▶914
	979
114-5126	1
	2
	▶921
	▶922
114-5127	1
	2
	▶1906
114-5133	1
	2
	▶980
	▶982
114-5137	1
	2
	▶942
114-5138	1
	2
	▶837
	▶838
114-5141	232
	256
	▶1792
114-5142	1
	2
	▶1774
	▶1777
	▶1781
	▶1785
114-5147	▶810
	821
114-5172	1
	2
	▶1708
114-5175	159
	▶161
114-5186	346
	347
	348
	▶349
114-5192	▶297
	1679
	1680
	1681
	1682
	1683
	1684
	1685
114-5196	▶1666
	1680
	1681
	1684
	1685
114-5198	4
	▶155
	▶156
114-5333	582
	585
	589
	592
	598
114-8165	1709
114-8167	1709
114-8843	363
	365
	378
	379
	386
	441
	482
	529
	597
	598
	612
	635
	636
	637
	651
	1733
114-8844	635
	637
114-8845	365
	598
	612
	637
114-9252	1869
	1875
114-9491	1283
115-0617	355
	378
	382
115-0627	1694
	1695
	▶1697
115-1392	1515
	1523
115-1527	1
	2
	▶1797
115-2129	▶1439
	1465
115-2247	1274
	1276
115-2422	279
	283
	287
115-3069	406
	407
	408
	409
	953
	1285
	1320
	1338
	1342
115-3071	659
	660
	662
	1424
115-3072	382
	618
	625
	629
	637
115-3082	533
	541
	548
	567
	575
115-3083	541
	548
	567
	575
115-3519	636
115-7087	214
	218
	219
115-9346	533
	541
	548
	554
	560
	566
	574
116-0118	608
	612
	628
	635
116-0434	1828
116-4491	582
	585
	589
	592
	598
	619
	624
	628
	635
116-4731	1346
116-4798	1294
	1302
	1311
	1363
	1366
	1338
	1342
116-5710	406
	407
116-6202	1774
116-6810	1768
116-7471	548
	554
	560
	566
	574
116-9331	1294
	1302
	1311
	1363
	1366
117-0067	649
	651
117-0159	1617
	1621
	1626
	1631
	▶1641
117-0160	1604
	1609
	1617
	1621
	1626
	1631
	▶1642
117-0161	1617
	1621
	1626
	1631
	▶1643
117-0775	1642
	1643
	1644
	1645
	1647
	1648
117-1410	1702
	1703
	1705
	▶1878
117-1903	1680
	1681
	1684
	1685
117-2311	484
	491
	498
	508
	522
117-3335	198
117-4491	1884
117-4492	1691
117-7865	1334
	1335
	1336
117-8704	1446
	1455
	1460
117-8801	85
117-9341	1617
	1621
	1626
	1631
118-0040	1833
118-0275	940
118-1225	2088
118-1277	279
	283
	287
118-2079	280
	284
	288

▶ PRIMARY REFERENCE

PART NUMBER INDEX

Part	Page
118-2080	279
	283
	287
118-5068	146
118-5083	1399
	1401
	1403
118-5085	1399
	1401
	1403
118-5086	1399
	1401
	1403
118-5087	1399
	1401
	1403
118-5805	1546
	1555
118-6606	1280
	1281
118-6878	641
	643
	647
	649
	651
	2067
	2072
	2075
	2078
	2081
	2084
118-7226	▶432
	680
	682
	684
	686
118-7362	484
	491
118-9901	777
	784
	791
	798
	805
	1364
	1367
118-9902	1424
	1774
	1777
	1781
	1785
119-0036	34
	35
119-0959	1638
119-1151	1751
	1844
119-3662	27
	363
	378
	379
	386
	414
	509
	510
	511
	520
	521
	567
	575
	598
	612
	637
	1807
119-4258	677
119-7837	664
	666
119-7839	617
	624
	628
	635
119-8984	395
	397
	398
120-5737	297
120-6052	842
120-8878	1768
	1771
120-9027	329
	330
	331
	332
	335
	336
	337
	338
120-9243	93
120-9847	13
	15
	17
	▶38
121-1257	712
121-1343	612
	1342
	1785
121-1905	929
	932
121-2051	1399
	1401
	1403
121-3274	1860
	1863
	1872
	1875
121-3275	1860
	1863
	1872
	1875
121-3277	1860
	1863
	1872
	1875
121-3278	1860
	1863
	1872
	1875
121-3286	1465
	1471
121-7848	279
	283
	482
121-7958	726
	1566
	1569
122-0447	59
	62
	65
122-0450	585
	589
	592
	598
122-1472	27
	29
	30
	31
	32
122-1671	1284
	1285
122-2222	657
122-3772	189
122-4026	167
	212
122-4429	484
	491
	498
	508
	522
122-6872	198
122-7375	59
	62
	65
122-8612	59
	62
	65
122-8705	292
	294
	1763
	1813
	1815
122-8905	182
122-9854	484
	491
	498
	508
	518
123-0334	2000
123-0335	2000
123-1373	279
	283
	287
123-2876	730
	734
123-2877	730
	734
123-2995	1768
	1771
123-2997	730
	734
123-3202	27
	29
	30
	31
	32
123-4371	1905
123-4627	484
	491
	498
	508
	518
123-5161	1768
123-5298	730
	734
123-6383	484
	485
	491
	498
	508
	523
123-7615	518
	520
123-9431	1831
124-0174	654
	655
	680
	682
	684
	686
124-0312	1732
124-0501	730
	734
124-0502	730
	734
124-0503	730
	734
124-0504	730
	734
124-0665	726
124-0689	726
124-1479	608
124-1555	1546
	1555
124-1718	1405
124-1854	70
	73
124-1855	70
	73
124-2708	207
124-3019	252
	254
	283
	482
	605
	608
	635
	747
	1477
	1481
	1488
	1495
	1590
	1595
124-3637	1909
	1912
	1915
	1919
	1923
124-4884	1761
124-6346	▶2008
124-7649	664
	666
	667
124-8366	1768

▶ PRIMARY REFERENCE

PART NUMBER INDEX

Part	Page
124-8368	1768
	1771
125-0434	179
	184
125-0965	1316
	1317
125-0966	1316
	1317
125-0971	1080
	1082
	1088
	1090
125-1302	▶456
	533
	541
	548
	554
	560
	566
	574
125-1355	675
	▶1316
125-1358	675
	▶1317
125-2706	680
	682
	684
	686
	1354
	1359
125-3276	1833
	1834
	1835
125-3295	1276
125-3657	▶1655
	1656
125-5835	404
125-6535	445
	450
125-6536	445
125-6537	445
	450
125-7874	482
	509
	510
	511
	519
	520
	521
	567
	575
	576
	613
	635
	636
	637
	651
	1679
	1680
	1682
	1683
	1729
	1807
125-7875	27
	363
	365
	378
	379
	386
	509
	510
	511
	520
	521
	567
	575
	576
	613
	635
	637
	1807
125-7876	548
	554
	566
	567
	575
	597
125-8176	911
125-8534	612
	1437
125-9349	1617
	1621
	1626
	1631
	▶1644
126-0081	13
	15
	17
	▶207
	▶208
126-0197	1465
	1470
126-1052	1860
126-1756	85
126-1757	93
	95
126-1767	27
	363
	386
	418
	519
	521
	567
	575
	612
	636
	1413
	1415
	1729
	1807
126-1768	363
	386
	459
	510
	519
	520
	522
	567
	575
	598
	637
126-1774	511
	527
	528
	575
	598
	1807
126-1817	1439
126-3883	853
	856
126-4935	37
	179
	184
126-5483	▶846
	▶848
	▶850
	859
126-5606	1697
126-5607	1697
126-5608	1697
126-5609	1697
126-5612	1697
126-6006	1697
126-6008	1788
	1790
126-6009	1697
126-6010	1697
126-7168	911
126-7574	302
	306
126-7631	13
	15
	17
	▶291
126-8182	712
126-8449	291
126-8472	1698
127-0323	1890
127-0366	982
127-0785	223
	225
	227
	229
	234
127-0929	207
	208
127-1001	862
127-4540	485
	492
	499
127-4667	777
	784
	791
	798
	1346
	1350
	1465
	1470
127-4832	1373
127-5480	1890
127-6356	157
127-6422	1697
127-6423	1697
127-9483	1551
	1553
127-9485	1551
	1553
127-9490	1551
	1553
128-0317	187
128-0606	1274
128-0607	1274
128-1026	1860
	1863
	1866
	1869
	1872
	1875
128-3786	1752
128-3787	1752
128-4123	568
	576
128-4162	598
128-4165	521
128-4172	511
128-4188	637
128-5302	853
	856
	▶860
128-5303	▶853
	▶856
	859
128-7115	860
128-7116	860
128-7348	862
128-8678	1004
128-8704	860
	862
	867
128-8795	860
	862
	867
128-9341	1449
	1458
129-0822	860
	862
	867
129-0987	730
129-0988	730
129-1598	860
129-2552	1745
	1749
129-2553	1743
	1747
129-2565	1745
129-2567	1740
	1743
129-2568	1740
129-2570	1860
	1863
	1872
	1875
129-2572	1860
	1863
	1872
	1875
129-2576	1740
129-2577	1745
	1749
129-2578	1740

▶ PRIMARY REFERENCE

PART NUMBER INDEX

Part	Page
	1743
	1747
129-2581	1860
	1863
	1866
	1869
	1872
	1875
129-2584	1740
	1743
	1745
	1747
	1749
129-3172	95
129-3178	1285
	1697
129-3180	331
	332
129-3181	1993
129-5224	1771
129-5427	93
	95
129-5428	93
	95
129-7184	1734
129-8293	1604
	1609
	▶1645
129-9690	1722
	1723
129-9907	187
130-1887	1788
	1790
130-1888	1697
130-1890	1697
130-4698	85
130-4701	85
130-5300	234
	238
	242
	246
	351
	363
	370
	374
	378
	387
	473
	474
	477
	479
	480
	481
	482
	534
	542
	549
	554
	559
	560
	568
	576
	582
	585
	589
	592
	598
	605
	608
	613
	618
	625
	629
	637
	641
	643
	647
	649
	651
	657
	669
	670
	680
	682
	684
	686
	850
	856
	997
	1405
	1471
	1736
	1738
130-6392	1740
	1742
	1743
	1745
	1747
	1749
130-6788	519
130-6789	519
130-6790	519
130-7093	846
	848
	850
	853
	856
130-8176	▶1831
	1832
130-9811	435
	436
130-9984	1777
	1781
	1785
131-0427	▶433
	605
	617
	624
131-0820	1697
131-0821	1697
131-0822	1697
131-1274	1694
	▶1788
131-1492	520
	637
131-1495	520
	521
131-1500	520
	521
	637
131-1503	519
	521
131-1507	519
	521
131-3093	1697
131-3540	980
	1771
131-5879	950
131-6593	929
	932
131-7035	1294
	1302
131-7123	85
131-7417	860
	862
	867
131-7418	846
	848
	850
	853
	856
131-7419	846
	848
	850
	853
	856
131-7741	1794
	1795
131-7810	1162
131-7811	1162
131-7812	161
	164
131-8107	88
	90
132-0338	1691
132-1069	2000
132-1070	2000
132-1071	▶2000
132-2925	837
132-2927	837
	838
132-3392	2063
132-3522	1761
132-3968	1708
132-4450	860
	862
	867
132-4451	860
	862
	867
132-4452	860
	862
	867
132-4454	846
	848
	853
132-4455	846
	848
	850
	853
	856
132-4457	862
132-4458	846
	848
	850
	853
132-4460	846
	848
	850
	853
	856
132-4463	860
	862
	867
132-5789	211
	229
	486
	493
	500
	512
	518
	601
	603
	682
	686
	1736
	1738
132-6133	▶1572
	1679
	1680
132-6136	1443
	▶1502
132-6140	▶1332
	1443
132-6142	▶1363
	▶1366
	1443
	1444
132-6143	1443
	1444
	▶1561
132-6144	▶1338
	▶1342
132-6236	23
	▶134
132-7486	942
132-7487	938
132-7488	942
132-7551	192
	196
	284
	288
132-9770	410
	412
133-0125	179
	184
133-0261	429
133-1643	1163
133-1645	1163
133-2198	719
133-2904	811
133-3359	210
133-3489	566
	574
133-3630	961
133-4292	712
	734
133-5209	828
	829

▶ PRIMARY REFERENCE

PART NUMBER INDEX

Part	Page
133-5587	860
	862
	867
133-6347	846
	848
	850
	853
	856
133-6517	321
	322
	323
	324
133-6567	882
	885
133-6578	1371
133-6588	846
	848
	850
	853
	856
133-6589	860
	867
133-6934	585
	589
	592
	598
133-7133	860
	862
	867
133-7134	860
	862
	867
133-7215	1709
	1713
133-7221	846
	848
	850
	853
	856
133-8116	▶730
	▶734
	872
133-9116	259
	260
133-9906	26
133-9907	▶26
	78
133-9928	846
	848
	853
134-0037	1280
134-0039	1280
	1281
134-2252	▶434
	641
	643
134-2540	1807
134-2552	1164
134-2554	982
	991
	▶1164
134-2636	279
134-2778	968
	971
	974
134-2779	968
	971
	974
134-2780	968
134-2781	968
134-2782	943
134-2809	13
	15
	17
	▶88
	▶90
134-4126	299
	300
	301
	302
	306
	307
	308
	310
	311
134-4821	982
	991
134-5623	824
134-5628	826
134-6051	1838
134-6052	1838
	1841
134-6721	1844
134-6722	1838
	1841
134-6723	1838
	1841
134-7258	2088
134-7326	1838
	1841
134-8297	1131
134-8459	1346
	1350
134-9817	730
	734
135-0426	▶341
	370
	374
	378
	382
	386
	390
	391
	392
135-1844	826
135-1845	826
135-3161	1334
	1335
	1336
135-3489	1319
135-3490	822
	1319
135-3573	1319
135-4928	187
135-5154	1164
135-5155	1164
135-6642	1944
135-6925	1708
135-6926	1708
135-6928	167
	170
	173
	176
135-6929	190
	192
	194
	196
135-6931	991
135-7052	777
	784
	791
	798
	805
135-7123	1272
	1273
135-7816	1422
	1423
135-9350	2042
135-9562	1999
135-9941	846
136-0007	1294
	1302
	1311
136-0008	1294
	1302
	1311
136-0012	1290
	1292
	1309
136-0013	1290
	1309
136-0019	1294
	1302
	1311
136-1082	1428
136-1107	187
136-1543	1823
	1824
	1826
136-1544	1691
136-1722	821
	▶830
	▶832
136-1725	1860
	1863
	1866
	1869
	1872
	1875
136-1726	1860
	1863
	1866
	1869
	1872
	1875
136-1728	1860
	1863
	1866
	1869
	1872
	1875
136-1729	1860
	1863
	1866
	1869
	1872
	1875
136-1730	1860
	1863
	1866
	1869
	1872
	1875
136-1731	1860
	1863
	1866
	1872
136-1732	1860
	1863
	1872
	1875
136-1734	1860
	1863
	1866
	1869
	1872
	1875
136-1747	830
	832
	▶873
136-1748	873
136-1749	830
	832
	▶874
136-1750	874
136-1753	830
	832
136-1754	821
	▶834
136-1755	834
	▶875
136-1756	875
136-1953	1698
	1794
136-2186	1856
	2066
136-2623	704
	706
	708
136-2718	1749
136-2720	1747
136-3188	1700
	1701
136-3190	1701
136-3195	1700
136-3357	▶1833
	▶1834
	▶1835
	1836
	1837
136-3607	1724
136-3645	1833
	1834
	1835
136-3742	187
136-3842	1319
136-3970	1832
136-4838	812
136-4839	812
136-4840	812

▶ PRIMARY REFERENCE

PART NUMBER INDEX

Part	Page
136-4841	812
136-5049	891
	892
	893
	895
	897
	▶912
136-5490	1766
	1767
	1813
	1850
	1851
136-6195	1944
136-6203	1944
136-6381	134
136-6382	134
136-7227	117
	139
	141
	143
136-8035	712
136-8036	712
136-8423	1373
	1551
	1553
136-9353	1860
	1863
	1866
	1872
	1875
136-9466	982
	987
	991
	994
136-9698	1294
	1302
	1311
136-9699	805
136-9718	980
136-9719	980
136-9720	989
	994
136-9721	989
	994
136-9722	989
136-9723	982
	991
136-9759	989
137-2170	1908
137-2196	134
137-3300	966
137-4234	1946
	1954
	1979
137-5109	351
	363
	370
	374
	378
	382
	386
137-5646	1546
	1555
137-6645	430
	435
	436
	438
	439
137-6841	1899
137-7321	1860
	1863
	1866
	1869
	1872
	1875
137-7331	179
	184
137-8832	▶675
	821
137-8833	▶675
	821
137-8834	675
	▶677
137-8836	676
	677
137-8837	887
137-8843	887
137-8846	887
137-8849	887
137-8851	675
	▶712
137-8856	712
137-8857	712
137-8858	712
	▶714
137-8859	714
	716
137-8862	675
	▶676
137-8865	▶717
	821
138-0006	1969
	1972
138-0020	1969
	1972
138-0022	1969
	1972
138-0549	1658
138-1523	993
138-1870	1332
	1333
138-1873	924
	926
138-1875	929
	932
138-2237	688
	693
	698
138-2238	688
	693
	698
138-2239	▶163
	688
	693
	698
138-2240	163
138-2800	1838
	1841
138-3815	1649
	1650
138-3909	1566
	1569
138-4048	1294
	1302
	1311
138-4049	1465
138-4050	743
	747
	752
	756
	763
138-4837	1828
138-6108	921
	939
	968
	971
	974
	1158
	1841
138-6451	2053
138-6552	2054
138-6744	187
138-7496	1561
138-7497	1561
138-7643	1131
138-7795	2093
138-7823	1828
138-8173	1560
138-8175	1560
138-8187	1794
	1795
138-8861	1816
	1818
	1819
138-8862	1816
	1818
	1819
138-8863	1816
	1818
	1819
138-8864	1816
	1818
	1819
138-9651	1295
	1303
	1311
139-0178	534
	542
139-1378	1709
	1713
139-2116	664
	667
139-2212	279
	283
	482
139-3213	1371
139-3544	▶1646
	1649
139-3550	179
	184
139-3884	279
	283
	482
139-5544	1838
139-5546	1841
139-5943	717
139-6366	909
139-9189	▶726
	777
	784
	791
	798
	805
139-9391	714
139-9392	714
139-9469	1794
140-0205	1294
	1302
	1311
140-0206	1285
	1294
	1302
	1311
140-1088	349
	351
	353
	355
	356
	370
	374
	378
	382
140-2961	1831
140-2963	1831
140-3094	954
140-3129	891
	892
	893
	895
	897
140-3673	912
140-5856	777
	784
	791
	798
	805
140-5945	1716
	1718
140-6553	714
140-6554	714
140-6555	714
140-8949	161
140-9746	13
	15
	17
	▶37
140-9859	161
140-9860	161
141-0008	932
141-1481	1405
	▶1656
141-2107	1189
	1204
	1206
	1208
	1210
	▶1266
141-2150	966
141-2151	966
141-2155	966

▶ PRIMARY REFERENCE

PART NUMBER INDEX

Part	Page
141-2156	966
141-2158	1148
141-4644	▶1284
	1702
	1703
	1704
	1705
141-4645	1702
	1703
	1704
	1705
	▶1832
141-4699	1774
141-4936	1724
141-4940	1702
	1703
	1704
	1705
	▶1724
141-7072	739
	743
	747
	752
	756
	760
	763
141-7405	1465
	1470
141-7909	1294
	1302
	1311
141-7913	1294
	1302
	1311
141-8698	533
	541
	548
	554
	560
	566
	574
141-8712	617
	624
141-8713	349
	353
	365
141-8714	617
	624
141-9203	947
141-9520	1346
	1350
	1354
	1359
141-9521	1346
	1350
	1354
	1359
141-9666	1338
	1342
141-9811	▶827
	840
	841
	842
	843
	844
	845
142-0149	1546
	1555
142-0203	1566
	1569
142-0358	533
	541
	548
	554
	560
	566
	574
142-0811	161
	164
142-2133	1371
142-2137	1371
142-2329	53
	55
	57
142-3331	605
	608
142-5017	921
	922
142-5795	917
142-5797	917
	919
142-5798	917
	919
142-5799	917
	979
	▶987
142-5800	▶917
	▶919
	979
142-5801	982
	987
	994
142-5802	982
	987
	994
142-5803	917
	919
142-5804	917
	919
142-5805	917
142-5807	917
	919
142-5808	917
	919
142-5809	917
	919
142-5867	133
142-5868	132
142-6988	966
142-6989	966
142-6994	1139
	1141
	1143
142-6995	1139
	1141
	1143
142-6996	1139
	1141
	1143
142-7008	909
142-7009	909
142-7010	1157
142-7011	1157
142-7022	943
142-7442	1768
	1771
142-8870	163
143-1288	1880
	1882
	1885
143-2006	1546
	1555
143-3000	672
143-3669	206
143-4158	1346
	1350
	1354
	1359
143-4512	887
143-5122	522
143-7319	1546
	1555
143-8971	77
143-9148	1297
	1304
	1313
143-9361	968
	971
	974
	▶1157
143-9393	179
	184
143-9732	77
144-0178	641
144-0195	1909
	1912
	1915
	1919
	1923
144-0221	1604
	1609
	▶1647
144-0290	828
144-1636	461
	1417
	1419
144-2223	533
	541
144-4524	712
144-4613	351
	363
	375
	379
	386
	585
	612
	628
	635
	1134
	1483
	1490
	1497
144-5385	828
	829
144-6142	77
144-7033	1285
144-7766	1729
144-9528	921
144-9529	921
144-9530	921
144-9531	921
	922
145-0326	1903
145-0415	▶840
145-0421	▶840
145-2379	472
145-3319	1475
	1481
	1488
	1495
145-3849	37
145-4922	1139
	1141
	1143
145-5181	1601
145-8130	968
145-8951	1729
145-8952	1729
145-9283	179
	184
145-9959	680
	682
	684
	686
146-1890	1274
146-1891	1274
146-1892	1276
146-1893	1276
146-2274	1295
	1303
	1312
146-2598	1276
146-3338	221
146-3725	1294
	1302
	1311
	▶1320
146-3728	1399
	1546
146-4378	▶715
	716
146-5067	161
	164
146-6734	617
	624
	628
	635
146-6747	2088
146-7271	▶716
146-7272	▶716
146-7274	715
146-7275	715
146-7571	1363
	▶1394
146-8349	915
146-8350	982
	987
	994
146-8351	917
	919

▶ PRIMARY REFERENCE

PART NUMBER INDEX

Part	Page
	994
146-8352	917
	919
	994
146-8353	917
	919
	994
146-8354	917
	919
	994
146-8990	1546
	1555
146-8991	1546
	1555
146-9408	1320
	1322
147-0192	179
147-0319	▶327
	355
	356
147-0385	585
	589
	592
	1285
147-1223	▶1657
	1660
147-1237	1380
	▶1381
147-1238	1380
	▶1382
147-1445	567
	576
	1807
147-1446	567
	576
	1807
147-2001	1688
147-2577	1709
	1713
147-3061	1381
147-3120	▶1694
	1702
	1703
	1704
147-3150	254
147-3324	1294
147-6457	887
147-6603	1387
147-6604	1387
147-6605	1387
147-8561	727
147-8562	727
147-8563	727
148-1546	887
148-1928	882
	885
148-2350	1399
	1546
148-3548	1546
	1555
148-5581	1274
148-6729	617
148-7482	19
	▶99
148-7919	167
	170
	173
	176
	▶198
148-8240	1163
148-8306	1295
	1326
148-8307	1295
	1303
	1312
	1338
	1342
148-8311	1792
148-8312	1475
	1481
	1488
	1495
148-8313	618
	625
	629
	637
148-8315	1590
	1595
148-8316	167
	170
	173
	176
	190
	192
	194
	196
148-8318	1295
	1303
	1312
	1363
	1366
148-8320	999
	1004
	1118
	1122
	1126
	1180
	1183
	1197
	1230
	1257
	1258
	1259
148-8322	1489
	1496
148-8325	777
	784
	2067
	2072
	2075
	2078
	2081
	2084
148-8326	698
	1481
	1488
	1495
148-8327	739
	743
	747
	752
	756
	760
	763
	766
	770
	777
	784
	791
	798
	805
	1295
	1303
	1312
	1411
	1465
	1471
	1475
	1481
	1488
	1495
148-8333	739
	760
148-8334	743
	747
	752
	756
	763
148-8335	155
	688
	693
	698
	1405
148-8336	777
	784
	791
	798
	806
	1295
	1303
	1312
	1322
	1324
	1363
	1366
	1405
	1481
	1488
	1495
	1507
	1509
	1511
	1513
	1573
	1575
	1578
	1582
	1586
	1590
	1595
148-8338	1285
148-8339	693
	698
	743
	747
	752
	756
	763
	766
	1431
	1434
148-8340	170
	173
	176
	1295
	1303
	1312
	1405
	1466
	1591
	1596
148-8341	1363
	1366
148-8342	234
	238
	242
	246
	319
	1363
	1366
	1591
	1596
148-8344	777
	784
	791
	798
	806
148-8346	234
	238
	242
	246
148-8347	688
	739
	760
	1411
	1437
	1466
	1471
	1475
	1481
	1488
	1495
	1564
	1591
	1596
148-8352	688
	693
	698
	1405
	1434
148-8353	778
	785
	791
	1346
	1350
	1354
	1359
	1363
	1366
	1466

▶ PRIMARY REFERENCE

PART NUMBER INDEX

Part	Page
	1471
	1475
	1482
	1489
	1495
	1572
	1575
	1578
	1582
	1586
148-8354	1338
	1342
148-8355	155
	156
148-8357	1431
	1434
	1437
148-8359	739
	743
	747
	752
	756
	760
	763
	1475
148-8360	688
	693
	698
	743
	747
	752
	756
	763
	1431
	1434
	1437
	1466
	1471
148-8361	688
	693
148-8362	688
	693
	698
148-8363	806
148-8364	1290
	1292
	1295
	1303
	1312
	1326
	1406
	1466
	1471
	1572
	1575
	1578
	1582
	1586
	1591
	1596
148-8365	198
	1147
	1320
	1322
	1324
	1338
	1342
	1591
	1596
148-8366	1062
	1064
	1067
	1084
148-8367	657
	778
	785
	792
	798
	1080
	1082
	1088
	1090
	1186
	1188
	1212
	1214
	1216
	1219
	1221
	1223
	1231
	1237
	1247
	1249
	1250
	1252
	1253
	1254
	1255
	1304
	1312
	1338
	1342
	1363
	1366
	1573
	1575
	1578
	1582
	1586
	1591
	1596
148-8368	2067
	2072
	2075
	2078
	2081
	2084
148-8370	1295
	1303
	1312
	1326
	1364
	1367
	1406
148-8371	724
	1062
	1064
	1067
	1084
148-8372	1475
	1482
	1489
	1496
148-8373	747
	752
	756
	764
148-8374	250
	252
	254
	778
	785
	799
	1364
	1367
	1406
	1466
	1471
148-8375	1286
	1295
	1303
	1309
	1312
	1364
	1367
	1724
148-8376	688
	694
	699
	1476
	1482
	1489
	1496
148-8377	1131
148-8378	657
	792
	1131
	1286
	1295
	1303
	1312
	1338
	1342
	1346
	1350
	1354
	1364
	1367
	1406
	1507
	1572
	1575
	1578
	1582
	1586
	1591
	1596
148-8380	1062
	1064
	1067
	1084
148-8387	739
	743
	748
	753
	757
	760
	764
148-8388	1482
148-8389	1092
	1096
	1100
	1105
	1109
	1113
	1134
	1139
	1141
	1143
148-8390	234
	238
	242
	246
148-8392	743
	748
	753
	757
	764
	799
	806
	1295
	1303
	1312
148-8395	223
	225
	227
	229
	1662
	1663
148-8405	147
148-8406	1604
	1609
	1617
	1621
	1626
	1631
148-8407	1346
	1350
	1354
	1359
	1388
	1391
	1502
	1505
	1604
	1609
	1617
	1621
	1626
	1631
	1649
	1650
	1653
148-8408	1466
	1471
148-8409	1388
	1391
148-8410	234
	238

PART NUMBER INDEX

Part	Page
	242
	246
148-8411	1364
	1367
148-8415	657
	1286
	1406
148-8417	688
	694
	699
148-8418	1476
	1482
	1489
	1496
148-8426	1406
148-8427	1466
	1471
148-8428	1295
	1303
	1312
	1406
148-8429	1431
	1434
	1437
148-8430	791
	1294
	1302
	1311
	1431
	1434
	1437
148-8433	1131
	1147
	1186
	1189
	1204
	1206
	1208
	1210
	1212
	1214
	1223
	1233
	1238
	1239
	1243
	1245
	1247
	1250
	1255
	1364
	1367
	1583
	1587
	1591
	1596
148-8434	1134
	1509
148-8435	1322
	1507
	1572
	1575
	1578
	1582
	1586
148-8436	1364
	1367
148-8439	1509
	1511
	1591
	1596
148-8442	688
	694
	699
148-8443	1359
	1431
	1434
	1437
148-8444	1084
	1131
	1286
	1296
	1303
	1312
	1326
	1406
	1591
	1596
148-8445	1406
148-8446	1364
	1367
148-8449	766
	770
	1431
	1476
	1482
	1489
	1496
148-8451	766
	770
148-8452	1591
	1596
148-8454	1290
	1292
	1309
148-8455	744
	748
	753
	757
	764
	766
	770
148-8457	1286
	1296
	1303
	1312
	1724
148-8458	1080
	1082
	1088
	1090
	1134
148-8889	727
149-0606	1679
	1680
	1682
	1683
149-2491	1774
	1777
	1781
149-2610	766
	770
	▶884
	1658
149-2611	884
149-3253	1803
149-3949	1709
	1713
149-4617	1363
	1366
	▶1377
149-4925	1276
149-5268	81
149-5915	1952
149-6378	996
149-7378	41
	43
	44
	46
149-7738	585
	589
	592
	598
	978
149-8112	843
	845
149-8379	641
	643
	647
	649
	651
149-8452	900
	902
	904
	906
149-9110	85
150-1541	5
	▶938
	1166
150-2557	41
150-3035	1591
	1596
150-3036	1324
150-3065	718
	806
	1466
	1471
150-3135	▶41
	42
150-4027	1285
	1320
	1475
	1482
	1489
	1496
150-4029	167
	170
	173
	176
150-4037	1286
	1476
	1482
	1489
	1496
	1591
	1596
150-4043	1320
	1364
	1367
	1406
	1476
	1482
	1489
	1496
150-4047	1542
	1543
150-4048	319
150-4049	689
	694
	699
150-4279	14
	16
	18
	▶259
	▶260
150-4355	1546
	1555
150-6287	1709
150-6765	559
150-7585	1338
	1342
	▶1371
150-8015	1907
	1908
150-8896	2087
150-8993	943
	945
	947
151-2092	1803
	1805
151-2094	1724
151-2384	▶1376
151-2680	1346
	1350
	1354
	1359
151-2766	987
151-2767	987
151-5925	115
151-5966	85
151-6008	968
	971
151-6009	968
151-6250	1280
	1281
151-6251	1280
	1281
151-6427	1729
151-7455	1572
	1575
	1578
	1582
	1586
	1590
	1595
	▶1658
151-8754	329
151-9274	1720
152-0270	1304
	1311

▶ PRIMARY REFERENCE

PART NUMBER INDEX

Part	Page
152-0961	190
	192
	194
	196
152-1130	719
152-1626	704
	706
	708
152-1646	1428
152-3426	194
	196
152-3730	1688
152-3732	1688
152-3735	1667
	1668
	1670
	1672
	1686
	1687
152-3738	1688
152-3739	1417
	1419
	1428
	1430
152-3740	1667
	1668
	1670
	1672
	1686
	1687
152-3741	1688
152-3742	1688
152-3743	1662
	1663
152-3748	1688
152-3749	924
152-3750	1413
	1415
	1422
	1423
152-3751	1688
152-3752	924
	926
	1662
	1663
152-3753	1688
152-3832	167
152-3870	1465
	1470
152-5713	1465
	1470
152-5714	1465
	1470
152-5715	1465
	1470
152-5716	1465
	1470
152-7582	61
152-7737	1481
	1488
	1495
152-8332	1657
152-8338	1659
152-8340	1653
	▶1659
152-9152	1388
152-9840	744
153-1256	187
153-1804	943
	945
	947
153-2073	▶328
	349
	351
	353
	370
	374
	378
	382
153-3570	943
	945
	947
153-3602	1561
	▶1566
153-4806	956
	958
	960
	1673
	1674
	1675
	1676
	1677
	1678
153-6224	1284
153-6236	1346
	1350
	1354
	1359
	1476
	1482
	1489
	1496
153-6237	739
	748
	753
	757
	760
	764
	1431
	1476
	1482
	1489
	1496
153-6241	1062
	1064
	1067
	1084
	1296
	1304
	1313
	1364
	1367
153-6242	1466
	1471
153-6246	1134
153-6249	1338
	1342
153-6252	1286
	1296
	1326
153-6273	1274
	1276
153-6293	1572
	1575
	1578
	1582
	1586
	1590
	1595
153-6479	1371
153-6480	1371
153-6481	1371
153-7023	67
	68
	69
153-7024	67
	68
	69
	71
153-7044	979
	▶989
153-7095	617
	624
	628
	635
153-7655	1294
153-7656	1294
	1302
	1311
153-7738	1294
	1302
	1311
153-8474	1502
153-8475	1502
153-8476	1502
153-8477	1502
	1505
153-8478	1502
	1505
153-8479	1502
153-8480	1502
	1505
153-8481	1502
	1505
153-8482	1502
	1505
153-8483	1502
153-8484	1502
	1505
153-8921	1294
	1302
	1311
153-8922	1294
	1302
	1311
153-9023	187
153-9063	1566
153-9624	1346
	1350
	1354
	1359
	▶1373
153-9784	1566
	1569
153-9839	1687
153-9840	1687
153-9844	1687
153-9989	1614
	1640
153-9990	1614
	1640
154-0350	1363
	1366
154-0351	1363
	1366
154-0352	1363
	1366
154-0930	1566
	1569
154-1981	1798
154-1982	1799
154-4133	1399
	1546
154-4383	714
154-4475	159
	160
154-5232	171
	174
	177
154-5512	1572
	1575
	1578
	1582
	1586
	1590
	1595
154-6333	704
	706
	708
154-6518	351
	370
	374
	378
	382
154-6626	582
	585
	589
	617
154-6659	1338
	1342
154-6819	1572
	1575
	1578
	1582
	1586
154-6820	1572
	1575
	1578
	1582
	1586
154-6879	1687
154-7179	1572
	1575
	1578
	1582
	1586
154-7443	485
	492
	499
	▶1731

▶ PRIMARY REFERENCE

PART NUMBER INDEX

Part	Page
154-7531	1
	2
	►1688
154-7532	1363
	1366
154-7997	712
154-7998	712
154-8962	1475
	1481
	1488
	1495
154-9023	179
	184
154-9731	719
155-0054	743
	747
	752
	756
155-0696	295
	296
155-0698	295
	296
155-0809	49
	51
	52
155-0810	49
	51
155-0811	1134
155-1838	1294
	1302
	1311
155-2026	1431
	1434
155-2077	860
	862
	867
155-2079	987
	994
155-2251	1399
	1401
	1403
	1546
	1555
155-2255	479
	480
	481
	482
	485
	486
	492
	493
	499
	500
	509
	510
	511
	518
	520
	533
	534
	541
	542
	548
	559
	567
	576
	601
	603
	618
	625
	629
	636
	641
	643
	651
	654
	655
	680
	682
	684
	686
	850
	856
	1080
	1082
	1084
	1088
	1090
	1134
	1159
	1709
	1713
	1805
155-2257	684
	686
155-2258	482
	511
	520
	521
	637
	651
155-2259	511
	520
	635
	1682
155-2260	420
	421
	422
	459
	475
	477
	479
	480
	481
	482
	485
	486
	492
	493
	499
	500
	509
	510
	511
	518
	520
	522
	582
	585
	598
	601
	603
	605
	608
	612
	617
	618
	624
	625
	628
	629
	635
	636
	641
	643
	647
	651
	654
	655
	669
155-2263	511
155-2265	485
	492
	499
	511
	518
	533
	541
	601
	603
	617
	624
	628
	635
	1679
	1680
	1681
	1682
	1683
	1684
	1685
	1724
	1807
155-2269	601
	603
155-2270	223
	349
	351
	353
	363
	365
	370
	374
	378
	379
	382
	386
	394
	398
	400
	429
	441
	457
	479
	480
	481
	482
	485
	486
	492
	493
	499
	500
	510
	511
	518
	520
	521
	529
	533
	541
	548
	559
	568
	576
	582
	585
	598
	601
	603
	605
	608
	612
	617
	618
	624
	625
	628
	629
	635
	636
	641
	643
	647
	651
	654
	655
	669
	680
	682
	684
	686
	850
	1160
	1276
	1405
	1697
155-2271	479
	480
	481
	482
	485
	486
	492
	493
	499
	500

► PRIMARY REFERENCE

PART NUMBER INDEX

Part	Page
	509
	511
	518
	520
	608
	612
	618
	625
	629
	636
	641
	643
	647
	651
	657
	1724
	1763
155-2274	351
	363
	370
	374
	378
	382
	386
	485
	486
	492
	493
	499
	500
	509
	511
	518
	520
	605
	608
	612
	618
	625
	629
	636
	680
	682
	684
	686
	1697
	1763
	1807
155-2291	1609
	1621
	1631
155-2478	1267
	1268
	1269
	1270
	1271
155-2793	49
	51
	52
155-3624	171
	1388
	1391
	1476
	1482
	1489
	1496
	1604
	1609
	1617
	1621
	1626
	1631
155-3677	1363
	1366
155-3678	1363
	1366
155-3679	1363
	1366
155-3680	1363
	1366
155-3681	1363
	1366
155-3683	1363
	1366
155-4320	1363
	1366
155-4326	1546
	1555
155-4791	1497
155-5619	88
	90
155-5789	▶1809
	1909
	1912
	1915
155-5790	▶1810
	1909
	1912
	1915
	1919
155-6344	1466
	1471
155-6563	1724
155-6649	1802
	▶1803
	▶1805
155-7321	319
	1792
155-7328	689
	694
	699
155-7517	1476
	1482
	1489
	1496
155-7518	1475
	1481
	1488
	1495
155-7525	1475
155-7527	1475
	1481
	1488
	1495
155-7528	1476
	1482
	1489
	1496
155-8354	1836
	1837
155-8355	1836
	1837
155-8356	1836
	1837
155-8357	1752
155-9457	1338
	1342
155-9461	1465
	1470
155-9462	1465
155-9524	93
	95
155-9653	1752
156-0052	961
156-1817	924
	926
156-2842	1519
	1521
	1531
	1533
	1535
156-4403	1515
	1523
	1527
	1529
156-5519	▶1515
	1680
	1681
156-5545	1691
156-5781	1521
	1533
	1535
156-5970	1538
156-6175	518
156-7472	1475
	1481
	1488
	1495
156-9156	1572
	1575
	1578
	1582
	1586
157-0670	179
	184
157-2017	1159
157-2844	2087
157-3612	1662
	1663
157-4428	155
157-6138	777
	784
	791
	798
	805
157-6210	408
	409
	953
157-6305	1434
157-8954	1137
157-8955	1137
157-8957	1016
	1020
158-0250	327
	328
	339
158-0252	327
	328
	339
158-2336	1397
	1398
158-3416	85
158-3504	1555
158-6153	726
158-6185	▶1137
	1146
158-6634	664
	667
158-8032	941
158-8033	1561
158-8785	1
	2
	▶941
158-8881	93
	95
159-0250	1294
	1302
	1311
159-1533	85
159-3945	830
	832
159-6159	13
	15
	17
	▶39
159-7234	1836
	1837
159-7320	1546
	1555
159-8035	2087
159-8036	2087
159-8049	287
	482
159-8050	482
159-8053	279
	283
	287
159-8054	279
	280
	284
	287
	482
159-8524	85
159-8612	1139
	1141
	1143
159-8613	1139
	1141
	1143
159-8614	739
	760
159-8615	739
	760
159-8664	1727
159-8665	1727
159-9322	519
	527
	528
	567
	575

▶ PRIMARY REFERENCE

PART NUMBER INDEX

Part	Page
	576
	598
	636
	1807
159-9362	13
	15
	17
	▶145
160-0222	1320
	1322
160-0564	1092
	1096
	1100
	1105
	1109
	1113
	1118
	1122
	1126
	1777
	1781
	1785
160-0595	811
160-1638	731
	735
160-1744	997
	1062
	1064
	1067
	1084
	1131
160-2243	1724
160-2425	1290
	1292
	1309
160-3518	1727
	1766
	1767
	1813
	1846
	1850
	1851
160-4357	891
	892
	893
	895
	897
160-4989	612
160-5003	1860
	1863
	1866
	1869
	1872
	1875
160-5760	1
	2
	▶159
	▶160
160-5877	1838
	1841
160-6328	909
160-6353	1831
160-6365	1831
160-6366	1831
160-6381	319
160-7271	39
160-7277	▶840
160-7689	511
	519
	582
	585
	598
	629
	636
160-7690	519
	527
	528
	575
160-8510	677
160-9925	1768
161-0022	1276
161-0114	942
161-1353	1752
161-1382	1363
	1366
161-1383	1363
	1366
161-3357	982
161-3415	1768
	1771
161-3509	▶339
	351
	370
	374
	378
	382
161-3565	179
	184
161-4113	14
	16
	18
	▶157
161-4511	719
161-4515	719
161-5718	187
161-5719	▶187
	189
161-6149	1637
	1655
161-6154	1378
	1379
161-6161	1637
	1655
161-6403	1481
	1488
	1495
161-6622	145
161-6958	214
	218
	219
161-6963	214
	218
	219
161-7419	295
	296
161-8900	994
	1562
161-9275	675
	▶1280
	▶1281
161-9901	994
	1562
161-9903	167
	170
	173
	176
162-0177	143
	1388
	1391
	1399
	1401
	1403
	1604
	1609
	1614
	1617
	1621
	1626
	1631
	1640
162-0225	841
162-2077	339
162-2127	1346
	1350
	1354
	1359
162-2128	1346
	1350
	1354
	1359
162-2165	1547
	1555
162-3052	724
162-3858	1774
162-5812	1694
	▶1794
162-6505	1756
	1758
162-6884	▶1758
	1820
162-7365	1475
	1481
	1488
	1495
162-7599	1838
	1841
	▶1844
162-8455	1346
	1350
	1354
	1359
162-8617	113
162-8619	113
163-1135	1903
163-1201	1757
163-1876	340
	464
	485
	492
	499
	509
	521
163-1878	462
	463
	464
	485
	492
	499
	509
	521
163-1879	465
	467
163-2478	67
	68
	69
	71
163-3119	2088
163-3926	1274
163-3997	304
	305
	▶664
	▶666
163-4572	887
163-4797	1167
163-4798	1167
163-5442	1346
	1350
	1354
	1359
163-5515	1833
	1834
	1835
163-5596	1346
	1350
163-5646	1724
163-5647	1724
163-7902	1167
163-7903	1167
163-7908	1167
163-8033	▶909
	968
	971
	974
163-8119	1709
	1713
163-8811	1724
164-0058	1
	2
	▶1411
164-0327	1157
164-1234	1903
164-2108	878
	880
164-3256	1546
164-3302	811
164-3303	811
164-3417	256
	318
164-3765	533
	541
164-3766	533
	541
164-4156	677
164-4175	677
164-4180	924
	926
164-4237	1702
	1703
	1704
	1705

▶ PRIMARY REFERENCE

PART NUMBER INDEX

Part	Page
	▶1734
164-4531	1691
164-4767	1163
164-4769	1163
164-4817	1163
164-4831	1163
164-4856	859
	▶876
164-4865	▶1162
	1166
164-4866	▶1163
	1166
164-4883	1822
	1825
	1826
164-4891	811
164-5079	812
164-5544	657
	1084
	1131
	1322
164-5567	718
	778
	785
	792
	798
	806
	850
	856
	1286
	1294
	1302
	1311
	1326
	1346
	1350
	1354
	1359
	1376
	1401
	1403
	1431
	1434
	1437
	1465
	1470
	1477
	1482
	1489
	1496
	1542
	1543
	1591
	1596
	1604
	1609
164-5574	1471
	1476
	1482
	1489
	1496
164-5586	1286
	1294
	1302
	1311
	1326
164-5590	718
	1466
	1471
164-5611	1465
	1470
164-5616	1653
164-5619	143
164-5789	23
	▶76
164-6084	▶979
164-6085	▶979
164-6709	721
	1440
164-6862	1476
	1482
	1489
	686
	727
164-7444	1768
	1771
164-7556	333
	334
164-7577	▶452
	617
	624
	628
164-7908	1476
164-7959	1768
	1771
164-8911	167
	170
	173
164-9324	712
164-9326	712
165-0373	777
	784
	791
	798
	805
165-2093	1515
	1523
165-2096	1515
	1523
165-2135	712
165-2273	1792
165-2357	1519
	1521
165-2358	1519
	1521
165-3825	1519
	1521
	1531
	1533
	1535
165-3827	1519
165-3929	88
	90
165-3933	88
	90
165-4795	1866
165-4799	1866
165-4801	1866
	1869
165-4806	1866
	1869
165-4808	1866
	1869
165-4930	680
	682
	684
	686
165-4931	1346
	1350
	1354
165-4933	744
	748
	753
	757
	764
	766
	770
165-5030	202
165-5085	1609
	1621
	1631
165-5575	1740
165-5576	▶1740
	1860
165-5722	1742
165-5725	▶1742
	1860
165-5728	1742
165-5970	234
	238
	242
	246
	▶468
165-6062	1546
	1555
165-6170	146
165-6560	1702
	1703
	1704
	1705
	▶1754
165-6561	1754
165-6750	2067
	2072
	2075
	2081
165-6769	1702
	1703
	1704
	1705
	▶1752
165-6984	704
	706
	708
166-0344	1551
	1553
166-1880	747
166-2101	1521
166-2903	62
166-2904	59
	62
	65
166-3416	1797
	▶1798
166-3417	1797
	▶1799
166-4647	1431
	1434
	1437
	▶1440
166-4731	1899
166-4732	1899
166-4804	1713
166-4805	1713
166-6693	402
	403
166-6928	485
	492
	499
	509
	518
	▶1801
166-7057	209
166-9144	93
	95
166-9367	719
167-0080	961
167-0642	61
167-0643	61
167-1278	1944
167-1335	161
	164
167-1742	672
167-1795	1475
	1481
	1488
	1495
167-2009	719
167-2201	1334
	1335
	1336
167-2220	1417
	1419
	1428
	1430
167-2222	1413
	1415
	1422
	1423
167-2312	1334
	1335
	1336
167-2336	1417
	1419
	1428
	1430
167-2339	1413
	1415
	1422
	1423
167-4322	5

▶ PRIMARY REFERENCE

PART NUMBER INDEX

Part	Page
	6
	7
	8
	9
	10
	11
	▶1337
167-6769	1688
167-6771	1688
167-8081	48
	50
167-8083	48
	50
167-8130	75
167-9196	199
168-0287	941
168-0300	250
	257
168-1793	1838
	1841
168-2198	1551
	1553
168-2203	1541
168-3378	1559
168-3379	1559
168-3382	1559
168-3384	1559
168-3385	1559
168-3504	1551
	1553
168-4331	1688
168-4332	1688
168-4510	1897
	1898
168-4658	1337
168-4659	1337
168-6514	297
168-7319	1541
168-7800	215
	216
168-7861	1551
	1553
168-7868	1551
	1553
	▶1560
168-7869	1551
	1553
168-7940	1560
168-7941	1560
168-7942	1560
168-7943	1560
168-7944	1560
168-8508	1688
168-8974	250
	252
	254
168-9026	319
168-9980	1902
169-0417	406
	408
	▶414
	953
169-1529	485
	492
169-1616	1655
169-1617	1655
169-3295	155
	156
169-3301	297
	▶406
	▶407
169-3302	297
	▶408
	▶409
169-3311	406
	407
169-4279	1062
	1064
	1067
	1084
	1131
169-4374	1844
169-5862	718
	805
	1465
	1470
169-7380	1903
169-8258	▶1282
	1702
	1703
	1704
	1705
169-8373	2088
170-0050	719
170-0490	1890
170-0493	1272
	1273
	1397
	1398
170-0696	1899
170-0970	1709
	1713
170-0971	1899
170-0976	1890
170-0977	1899
170-0978	1890
170-0980	1713
170-1107	▶840
170-1112	1691
170-1114	1691
170-1115	1691
170-1757	23
	▶120
170-1821	522
	1709
	1713
170-3447	1788
	1790
170-3448	1788
	1790
170-3791	2093
170-3843	718
	▶719
170-4042	▶718
	777
	784
	791
	798
170-4673	179
170-4735	2067
	2072
	2075
	2078
	2081
	2084
170-4737	61
170-4738	61
170-6712	1278
170-7096	1709
	1713
170-7295	▶2053
170-7296	▶2054
170-7309	730
	734
170-7313	980
	▶991
170-7314	979
	▶993
170-7339	▶915
	979
170-7340	▶979
170-8540	1899
170-8590	1854
170-9372	533
	541
171-1055	1713
171-1147	1713
171-1150	2065
171-1151	2065
171-1152	2065
171-1153	2065
171-1230	1880
	1882
	1885
171-1391	1278
171-1855	2065
171-1856	2065
171-2205	534
	542
	549
	554
	560
	566
	574
171-2212	534
	542
	549
	555
	560
	566
	574
171-3673	1434
171-3759	1729
171-3897	1702
	1703
	1704
	1705
	▶1899
171-5349	428
171-5415	743
	747
	752
	756
171-5427	1662
	1663
171-6021	949
171-6022	949
171-6023	949
171-6024	949
171-6682	1880
	1882
	1885
171-6723	1296
	1304
	1313
171-6727	1092
	1096
	1100
	1105
	1109
	1113
	1118
	1122
	1126
	1134
171-6731	167
	170
	173
	176
	774
171-6757	1688
171-6786	▶949
	989
171-8867	1267
171-8868	1268
	1270
171-8869	1267
	1268
	1269
	1270
	1271
171-8870	1267
	1268
	1269
	1270
	1271
171-8964	1191
	1193
	1200
	1202
	1204
	1206
	1208
	1210
171-9629	1191
	1193
	1200
	1202
	1204
	1206
	1208
	1210
171-9679	1897
171-9683	1897
	1898
172-0084	860
	867
172-1482	414
172-2416	1880
	1882

▶ PRIMARY REFERENCE

PART NUMBER INDEX

Part	Page
	1885
172-3511	459
	522
	523
	1709
	1713
172-4387	▶1836
	▶1837
	1860
	1863
	1866
	1869
	1872
	1875
172-4424	1944
172-4425	1944
172-4426	1944
172-4622	766
172-4717	1944
172-4718	1944
172-4848	120
172-5277	1475
	1481
	1488
	1495
172-5307	1674
172-5481	1609
	1621
	1631
	▶1648
172-6409	1334
	1335
	1336
172-8037	1766
	1767
	1846
	1850
	1851
172-8039	1766
	1767
	1846
	1850
172-9200	465
	467
172-9389	▶299
	534
	542
	549
	555
	560
	568
	576
172-9391	▶300
	533
	541
	548
	554
	560
172-9981	1334
	1335
	1336
173-0714	730
	734
173-0715	730
	734
173-1028	▶1691
	1880
	1882
	1885
173-1437	760
173-1583	595
	597
173-1827	727
173-1830	727
173-1905	1702
	1703
	1704
	▶1897
173-1957	112
173-2052	1823
	1824
173-2118	1856
	1859
173-2469	730
	734
173-2616	1134
173-3993	1604
	1609
173-5787	1888
	1889
173-5791	1734
173-5850	712
173-5986	891
	892
	893
	895
173-5987	891
	892
	893
	895
173-6640	837
	838
173-6706	688
	693
	698
173-6753	688
	693
	698
173-7035	1888
	1889
173-7223	641
	643
	647
173-7455	1590
	1595
	▶1660
173-7760	719
173-8278	719
173-8466	304
	305
	346
	347
	348
	▶1757
173-8612	▶1422
	1444
	1502
173-8613	▶1423
	1444
	1502
173-8614	1413
	1415
	1422
	1423
173-8615	1422
173-8616	1423
173-9195	1838
	1841
173-9197	1838
	1841
173-9198	1838
	1841
173-9375	1702
	1703
	1704
	1705
	▶1902
173-9376	1902
173-9682	1334
	1335
	1336
173-9684	676
	677
174-0503	1807
174-0830	1446
	1449
174-0831	1446
	1449
174-0832	1446
	1449
174-0833	1446
	1449
	1452
	1455
	1458
	1460
174-1550	1278
174-1552	821
	▶1278
174-2031	667
174-2407	1856
	1857
	1858
174-2408	1857
	1858
174-2435	1446
	1449
	1452
	1455
	1458
	1460
174-3055	1902
174-3874	14
	16
	17
	▶112
174-4117	▶1926
174-4301	1894
174-4312	1285
	1320
174-4613	529
	531
	657
	670
	1131
174-5807	917
	919
174-5907	595
	641
	643
	647
	649
	651
	680
	684
174-5986	14
	16
	18
	▶189
174-6381	911
174-7875	1757
174-7950	▶2038
174-8849	297
174-9169	441
175-1366	39
175-1367	39
175-1370	1311
175-1372	1294
	1302
	1311
175-1373	1294
	1302
	1311
175-1374	1294
	1302
	1311
175-1375	1294
	1302
	1311
175-1376	1294
	1302
	1311
175-2794	1944
175-2795	1944
175-2853	887
175-3064	1768
	1771
175-3183	234
	238
	242
	246
175-3244	617
	624
	628
	635
175-3617	61
175-3860	14
	16
	17
	▶107
	▶109
175-3868	107
	109
175-4291	333
	334
175-4292	333
	334
175-5058	1692
175-6795	1551
	1553

▶ PRIMARY REFERENCE

PART NUMBER INDEX

Part	Page
175-6799	1551
	1553
175-7162	1774
175-7419	907
175-7739	246
	250
	252
	254
	592
175-7887	1546
	1555
175-7900	1334
	1335
	1336
176-5504	777
	784
	791
	798
	805
176-6448	693
	698
	▶877
176-7190	1509
	1511
	1513
176-7289	830
	832
176-7507	1373
176-7508	1373
176-7509	1373
	▶1375
176-7510	1373
176-7511	1373
176-7512	1373
176-7513	1373
176-7514	1373
176-7516	1373
176-7517	1373
176-7518	1373
176-7519	1373
176-7520	1373
	▶1383
176-7521	1373
176-7692	1373
176-7693	1373
176-7696	1373
176-8350	12
	▶454
176-9369	1377
	▶1378
176-9370	1377
	▶1379
177-0093	1566
	1569
177-1403	1546
177-1405	1399
	1401
	1403
	1546
	1555
177-1449	1688
177-1483	1278
177-1862	1854
177-1863	1880
	1882
	1885
177-2215	1790
177-2374	1727
177-3579	1816
	1818
177-4112	1727
177-4113	1726
	▶1727
177-4122	535
	543
	549
	555
	561
	569
	577
	907
177-4152	27
	31
177-4155	1465
	1470
177-4686	1271
177-4687	1269
177-4937	1884
	1887
177-8839	744
177-8924	1294
	1302
	1311
	▶1319
177-9645	485
	492
	499
	533
	541
177-9648	485
	492
	499
	533
	542
177-9653	628
	636
177-9656	629
	636
178-0182	1566
	1569
178-0603	▶1880
	▶1882
	1884
178-0604	▶1822
	1880
178-0605	1822
	▶1823
178-0606	▶1884
	1888
178-1602	688
	693
	698
178-2500	182
178-2991	712
178-2992	717
178-2999	1363
	1366
178-3000	1363
	1366
178-3001	1363
	1366
178-3002	1363
	1366
178-4139	▶1751
	1838
	1841
178-4640	730
	734
178-4641	730
	734
178-6265	408
	409
178-7907	1823
	1824
178-8486	1838
	1841
178-8504	1838
	1841
178-8583	485
	492
	499
	509
	518
179-2006	1546
179-2229	1519
	1521
179-2805	1068
	1084
	1431
	1434
	1437
179-3211	107
	111
179-3274	1338
	1342
179-3726	1866
	1869
179-3737	▶1743
	1863
	1866
	1869
179-3738	▶1745
	1863
	1866
	1869
	1875
179-4324	1285
179-6051	1768
	1771
179-6791	1465
	1470
179-6792	1465
	1470
179-6793	1465
179-6794	1465
	1470
179-6878	777
	784
179-6998	727
179-8107	454
179-9392	485
	492
	499
	509
	521
180-2595	1724
180-2596	1724
180-2624	1363
	1366
180-2625	1363
	1366
180-3039	1944
180-3040	1944
180-3732	▶469
180-3733	1866
	1869
180-3994	1283
180-3999	1282
	▶1283
180-4000	▶1274
	1283
180-4001	▶1276
	1283
180-4533	921
	922
180-4686	1519
	1521
180-5021	777
	784
	791
	798
180-5567	146
180-7110	595
180-7350	115
180-8424	182
180-9267	167
	170
	173
	176
180-9270	911
180-9272	▶911
	968
	971
	974
180-9339	32
	425
	429
	643
	647
	649
	651
	1706
180-9340	229
	420
	421
	422
	429
	617
	624
	628
	1080
	1082
	1084
	1088
	1090
180-9595	777
	784
	791
	798
180-9971	1724

▶ PRIMARY REFERENCE

PART NUMBER INDEX

Part	Page
180-9972	1724
183-1989	1902
183-2299	929
	932
183-3407	73
	119
183-3409	208
183-3626	1465
	1470
183-3681	477
183-3756	1703
	1704
	▶1923
183-4007	▶1816
	1820
183-4063	1397
	1398
183-4491	1465
	1470
183-4605	1926
183-5318	▶2000
183-5321	▶2000
183-5324	2000
183-5325	2000
183-5382	1185
	1189
183-5384	1181
	1183
	1186
	1250
183-5509	1195
	1197
	1227
183-5512	1181
	1183
	1195
	1197
	1212
	1214
	1221
	1223
	1227
	1229
	1230
	1247
	1254
	1255
183-5825	1183
	1186
	1188
	1191
	1200
	1204
	1208
	1221
	1223
	1225
	1227
	1229
	1230
	1233
	1235
	1238
	1242
	1250
	1252
	1253
	1254
	1255
	1258
183-7228	1163
183-7262	1388
	1391
183-7263	179
	184
	1391
	1604
	1610
	1617
	1622
	1626
	1632
183-7531	1838
	1841
183-7532	1838
	1841
183-7535	1167
183-7540	1167
183-7595	1616
	▶1661
183-8004	824
183-8040	1774
	1777
	1781
183-9409	1167
183-9411	1167
183-9412	1167
183-9413	1167
183-9414	1167
183-9415	1169
	1170
183-9416	1169
	1170
184-1699	1838
	1841
184-1700	1838
184-2298	1880
	1882
	1885
184-2299	1880
	1882
	1885
184-2420	1470
184-2472	301
	310
184-3635	1546
184-3675	1278
184-3677	1278
184-4617	1278
184-4902	617
	624
	628
184-4903	617
184-5092	1923
184-5093	▶1811
	1923
184-6673	1752
184-9866	1982
185-0004	743
	747
	752
	756
	763
185-0275	1541
	▶1559
185-0278	1541
185-0280	1541
185-0287	1559
185-0289	1559
185-0292	1559
185-0295	1541
185-0296	1541
185-1861	519
	520
	521
	1807
185-1897	1604
	▶1637
185-1933	▶113
	1166
185-2192	113
185-2638	276
185-2639	276
185-2644	276
185-2645	276
185-2647	276
185-2648	276
185-2650	276
185-2651	276
185-2653	276
185-2654	276
185-2655	276
185-2658	276
185-3521	1709
185-3522	1709
185-3523	1709
185-3653	887
185-3874	1800
185-3889	1546
	1555
185-4021	234
	238
	242
	246
185-4022	234
	238
	242
	246
185-5352	1547
	1556
185-5354	1547
	1556
185-5626	1617
	1621
	1626
	1631
185-6250	2067
	2072
	2075
	2078
	2081
	2084
185-6278	14
	16
	18
	▶135
185-6334	199
185-6690	454
185-7541	1186
185-7876	1641
	1652
185-9956	935
	938
	942
186-2001	67
	68
	69
	71
186-3294	1998
186-3735	275
	326
	341
	342
	343
	344
	345
	378
	379
	415
	416
	417
	427
	432
	433
	434
	452
	456
	458
	460
	468
	470
	471
	473
	484
	485
	491
	492
	498
	499
	508
	509
	510
	522
	523
	585
	589
	592
	628
	667
	879
	1285
	1338
	1441
	1709
	1713
	1721
	1766
	1767
	1805
	1809

▶ PRIMARY REFERENCE

PART NUMBER INDEX

Part	Page
	1811
	1812
	1846
	1850
	1851
	1923
186-3736	378
	379
	457
	509
	511
	1679
	1680
	1709
	1713
186-5107	1692
	1903
186-6189	1774
	1777
	1781
	1785
186-6218	1465
	▶1649
187-0541	1637
187-0565	1688
187-0678	727
187-0681	1294
	1302
	1311
187-0682	1294
	1302
	1311
187-0738	1702
	1703
	1704
	1705
	▶1729
187-0844	811
187-1328	13
	15
	17
	▶42
187-1679	256
	318
187-1707	1777
187-1867	1724
187-2108	1276
187-2710	879
187-2863	1944
187-2864	1944
187-3554	1740
187-5420	92
	93
187-6237	179
	184
187-8039	850
	856
187-8567	1370
187-8674	548
	554
	560
	566
	574
187-8675	548
	554
	560
	566
	574
187-8911	287
187-8979	85
187-8981	47
187-9116	1546
	1555
188-0158	280
188-0210	109
188-0960	1278
188-1035	1465
	1470
188-1754	13
	15
	17
	▶106
188-1755	106
188-2048	1729
188-2199	1413
	1415
	1417
	1419
188-3983	1709
	1713
188-3984	458
	1709
	1713
188-6280	1541
188-7007	1446
	1449
	1452
	1455
	1458
	1460
188-8849	327
	328
	339
188-9657	958
	1673
	1674
	1675
	1676
	1677
	1678
189-0852	429
189-1707	1781
	1785
189-1858	1062
	1064
	1067
	1084
	1131
	1172
	1174
189-2077	1716
	1718
189-2078	1716
	1718
189-2079	1716
	1718
189-3158	598
189-4383	1160
189-4384	1160
189-4387	1160
189-4391	1160
189-4393	1172
	1174
	1176
189-4394	1172
	1174
	1176
189-4395	1172
	1174
	1176
189-4398	1172
	1174
	1176
189-4401	1172
	1174
	1176
189-4402	1172
	1174
	1176
189-4404	1172
	1174
	1176
189-4407	1172
	1174
	1176
189-4408	1172
	1174
	1176
189-4409	1172
	1174
	1176
189-4918	47
189-5719	1294
	1302
	1311
189-7031	1181
	1183
	1212
	1214
	1227
	1229
	1230
	1247
189-7038	1062
	1064
	1067
	1084
	1131
189-7144	1462
189-7145	1462
189-7146	1462
189-7147	1462
189-7148	1462
189-7151	1318
189-7152	738
189-7153	738
189-7156	776
189-7157	724
189-7161	1504
189-7162	1504
189-7163	1504
189-7165	978
	1463
189-7166	1463
189-7167	978
	1463
189-7168	978
	1463
189-7169	978
	1463
189-7250	978
	1410
	▶1462
189-7252	978
	▶1318
	1410
189-7253	▶738
	978
	1410
189-7254	1410
	▶1517
189-7255	▶776
	978
	1410
189-7257	978
	1410
	▶1504
189-7259	1410
	▶1463
189-7288	1150
	1151
	1152
	1153
	1154
	1155
	1156
189-7337	953
189-7338	953
189-7370	1285
189-7372	1285
189-7373	1285
189-7394	950
189-7409	1819
189-7412	950
189-7413	950
189-7421	1285
189-7423	1285
189-7425	1285
189-7441	▶960
	1149
	1150
	1151
	1152
	1153
	1154
189-7444	1672
	1686
189-7445	1672
	1686
189-7456	1819
189-7467	950
189-7470	1285
189-7474	1686
189-7475	1686
189-7482	1062
	1064
	1067
	1084
	1131
189-7483	1062

▶ PRIMARY REFERENCE

PART NUMBER INDEX

Part	Page
	1064
	1067
	1084
	1131
189-7488	1062
	1064
	1067
	1084
189-7490	1147
189-7492	1147
189-7493	1147
189-7494	1080
189-7495	1080
	1082
	1088
	1090
189-7496	1080
	1082
	1088
	1090
189-7497	1034
	1038
	1042
	1070
	1074
	1100
	1113
189-7498	1034
	1038
	1042
	1100
189-7499	1034
	1038
	1070
189-7500	1034
	1038
	1042
	1046
	1050
	1056
	1070
	1074
	1092
	1100
	1113
189-7501	1062
	1064
	1067
	1084
189-7502	1062
	1064
	1067
	1084
189-7503	1080
	1082
	1088
	1090
189-7508	1080
	1082
	1088
	1090
189-7509	1080
	1082
	1088
	1090
189-7514	1007
	1012
	1034
	1038
	1042
189-7515	1007
	1012
	1034
	1038
	1042
189-7531	1100
	1105
	1122
	1181
	1195
	1197
	1214
	1216
	1219
	1225
	1235
	1244
	1247
	1249
	1259
189-7534	1181
189-7535	1231
	1237
189-7536	1092
	1096
	1118
	1231
	1237
	1241
	1257
189-7540	1181
	1183
	1186
	1223
	1227
	1229
	1230
	1250
	1255
189-7541	1191
	1193
	1195
	1197
	1200
	1202
	1212
	1214
	1247
	1250
	1253
189-7543	1178
	1188
	1191
	1193
	1195
	1197
	1200
	1202
	1204
	1206
	1208
	1210
	1216
	1219
	1221
	1225
	1235
	1249
	1252
	1254
	1260
189-7546	1178
	1183
	1188
	1212
	1216
	1219
	1221
	1225
	1227
	1229
	1230
	1233
	1235
	1238
	1249
	1252
	1253
	1254
189-7547	1183
	1223
	1227
	1229
	1230
189-7548	1181
	1197
	1214
	1219
	1223
	1227
	1229
	1247
	1249
	1255
189-7552	1225
	1235
	1237
	1243
189-7553	1189
	1223
	1227
	1229
	1230
	1255
189-7554	1178
	1195
	1197
	1212
	1214
	1225
	1235
	1247
	1260
189-7581	954
189-7589	1149
	1151
	▶1673
189-7590	6
	7
	8
	9
	10
	11
	▶724
189-7592	724
189-7593	724
189-7594	724
189-7595	724
189-7609	1070
189-7617	950
189-7622	950
189-7623	950
189-7638	1149
	1150
	▶1686
189-7700	950
189-7702	950
189-7703	950
189-7718	1185
	1191
	1193
	1200
	1202
	1241
	1242
	1244
189-7722	6
	7
	8
	9
	10
	11
189-7736	672
189-7737	499
189-7739	672
189-7740	1733
189-7779	6
	7
	8
	9
	10
	11
	▶310
189-7787	1405
189-7788	1405
189-7852	6
	7
	8
	9
	10
	11
189-7855	950
189-7895	1405
189-7897	1405
189-7981	1179
	1195
	1197
	1221
	1254
189-8048	1191

▶ PRIMARY REFERENCE

PART NUMBER INDEX

Part	Page
	1193
	1204
	1206
189-8050	1185
189-8069	1159
189-8624	1661
189-9763	1555
190-0009	19
	22
	▶100
	▶101
190-0948	▶1993
190-0949	1993
	▶2037
190-1701	1688
190-3132	▶321
190-3635	278
190-4764	1729
190-5386	2088
190-6560	33
190-6563	23
	▶33
191-0554	1264
	1265
	1266
191-0965	139
	141
	143
191-1782	234
	238
	242
	246
191-2933	1888
	1889
	▶1903
191-5114	1763
191-6084	704
	706
	708
191-7585	1375
191-7587	1375
191-7589	1375
191-7591	1375
191-7594	1375
191-7596	1375
191-7597	1375
191-7607	1383
191-8303	430
191-8735	1475
	1481
	1488
	1495
	▶1616
191-8921	1700
	1701
191-9247	1401
	1403
	1555
	1661
192-0815	887
192-0822	675
	▶887
192-1425	1428
	1430
192-1590	▶301
	559
192-4151	121
	123
	124
	125
	126
	130
192-5017	252
	582
	585
	589
	612
192-7054	1766
	1767
	1845
	1848
	1849
	1852
192-7439	559
	566
	574
192-7455	617
	624
	628
	635
192-7470	1541
192-7752	1903
192-7755	1903
192-7767	1903
192-7783	1903
192-7787	1903
192-7790	1903
192-7795	1903
192-7799	1903
192-7805	1903
192-7810	1903
192-7812	1903
192-7820	1903
192-7848	1903
192-7969	394
	400
192-8848	891
	892
	893
	895
	897
192-8851	▶900
	▶902
	989
192-8852	2
	▶904
	987
	994
192-9832	1993
192-9834	1993
192-9835	1993
192-9838	1993
192-9839	1993
193-0771	1803
	1805
193-0980	▶824
	826
193-1036	1638
193-1760	1944
193-2120	1517
193-2550	▶428
	731
	735
193-2652	1803
	1805
193-2653	1803
	1805
193-3086	1638
193-3087	1638
193-3973	522
	605
	608
	756
	763
193-5572	356
193-6911	1424
	1426
193-7404	250
	252
	254
	▶257
193-8912	945
	947
193-9131	582
	585
	589
193-9179	824
194-1497	693
	698
194-1674	1688
194-2147	1285
194-2905	777
	784
	791
	798
	805
194-2906	777
	784
	791
	798
	805
194-2909	777
	784
	791
	798
	805
194-2910	777
	784
	791
	798
	805
194-3285	1383
194-3286	▶1370
	1383
194-3287	1383
194-3288	1383
194-3289	1383
194-3715	▶1856
194-3766	▶1857
194-4132	841
194-4133	▶841
194-4136	▶841
194-4185	841
194-4186	▶841
194-6626	824
194-6722	▶420
	423
194-6725	▶421
	424
194-6849	1370
194-7264	774
194-8648	1736
	1738
194-9194	1421
194-9203	▶1421
	1993
194-9204	1421
194-9503	1421
194-9504	1421
194-9505	1421
194-9506	1421
194-9508	1421
194-9509	1421
195-0342	2037
195-0343	2037
195-0462	1290
	1292
195-0472	1838
	1841
195-0609	1993
195-0610	1993
195-0611	1993
195-0612	1993
195-0613	1993
195-0614	1993
195-0615	1993
195-0623	2037
195-0624	2037
195-2251	454
195-2271	454
195-3162	1084
	1131
	1838
	1841
195-3324	1370
195-3325	1370
195-5979	777
	784
	791
	798
	805
	▶826
195-5981	824
195-5985	824
195-5988	824
195-7180	2040
	2041
195-7181	2040
195-7182	2040
195-8697	1160
196-0056	778
	785
	792
	799
196-0342	358
196-0436	1856
	1859
196-2036	1590
	1595
196-5069	121

▶ PRIMARY REFERENCE

PART NUMBER INDEX

Part	Page
	123
	124
	125
	126
	130
196-5070	121
	123
	124
	125
	126
	130
196-5538	▶458
	1802
196-7365	1688
196-7369	1688
197-0679	1666
	▶1687
197-1488	138
197-1563	1172
	1174
	1176
197-3295	739
	743
	747
	752
	756
	763
	770
	777
	784
	791
	798
	805
	1294
	1302
	1311
	1465
	1470
197-3332	319
197-4859	1856
	1858
	1859
197-4971	85
197-5470	1856
	1859
197-6660	1007
	1012
	1016
	1020
	1025
	1029
	1034
	1038
	1042
	1046
	1050
	1056
	1092
	1096
	1100
	1105
	1118
	1122
	1137
197-7565	485
	492
	499
	510
	518
197-7701	1659
197-7863	1007
	1012
	1016
	1020
	1025
	1029
	1034
	1038
	1042
	1046
	1050
	1056
	1092
	1096
	1100
	1105
	1118
	1122
	1137
197-8391	223
	410
	▶435
197-8392	410
	▶436
197-8820	▶276
	278
198-0997	657
198-1092	1927
	1986
	1988
	1990
198-1854	1481
	1488
	1495
198-2914	1401
	1403
	1555
	1661
198-3406	739
198-3407	739
198-4266	924
	926
198-4775	523
198-4777	164
198-4780	1858
198-6434	1572
	1575
	1578
	1582
	1586
198-6439	1290
	1292
	1572
	1575
	1578
	1582
	1586
198-6570	485
	492
	499
	509
	518
198-6571	492
	499
	509
	518
198-7651	592
	598
198-7667	1572
	1575
	1578
	1582
	1586
198-7668	1572
	1575
	1578
	1582
	1586
198-7669	1572
	1575
	1578
	1582
	1586
198-7670	1572
	1575
	1578
	1582
	1586
198-8196	1572
	1575
198-8769	1894
198-8871	1405
198-9229	1
	2
	▶940
198-9230	940
198-9397	900
198-9403	900
	904
198-9406	900
198-9407	900
	902
	904
198-9408	904
198-9412	904
198-9898	99
	▶121
199-1293	929
	932
199-3066	▶928
199-3368	▶342
	370
	374
	382
199-3721	841
199-3722	▶841
199-5510	1857
199-5670	408
	409
	953
199-6290	778
	785
	792
	799
	806
199-7891	276
199-8436	276
2	
200-0728	1894
200-0729	1894
200-0818	887
200-0819	887
200-0820	676
200-0866	1294
	1326
200-1137	199
200-3174	1702
	1703
	1704
	1705
	▶1888
200-5156	▶842
200-5161	▶842
200-5165	▶842
200-5169	▶842
200-5172	▶843
200-5177	843
200-5178	842
200-5180	842
200-5181	842
200-5254	1446
	1449
	1452
	1455
	1458
	1460
200-5728	1766
	1767
	1813
	1846
	1850
	1851
200-5962	1285
	▶1330
200-6345	605
	608
	612
	756
	763
	999
200-7949	▶843
200-7951	843
201-0184	1993
201-0218	▶1575
	1680
	1681
201-0364	1743
	1745
	1747
	1749
201-0377	▶1446
	1681
201-0737	1280
	1281
201-1049	▶1664
	1681
	1685

▶ PRIMARY REFERENCE

PART NUMBER INDEX

Part	Page
201-4221	1906
201-4222	1906
201-4340	55
	57
201-5563	1718
201-6617	▶429
	431
201-7244	835
201-7245	830
	▶835
202-0314	568
	576
202-0671	1636
202-0673	1636
202-0674	1636
202-2762	370
	374
	379
	382
202-3702	688
	693
	698
202-6614	333
	334
202-7652	1768
	1771
202-8038	1295
	1302
	1311
203-0147	147
203-0328	1890
	1894
203-1095	1373
203-2059	1134
	1263
203-3072	1465
	1470
203-4811	1431
	1434
203-5443	1424
	1426
	1774
	1777
	1781
	1785
203-5498	1774
203-5499	1774
203-5535	1431
	1434
	1437
203-5870	1295
	1302
	1311
203-5871	1295
203-6481	1734
203-6490	929
	932
203-6992	▶843
203-7703	1888
	1889
203-8482	1604
	1609
	1617
	1621
	1626
	1631
203-8609	1551
	1553
203-8822	121
203-8824	121
	123
	124
	125
203-9163	1551
	1553
203-9364	766
	770
203-9368	743
	747
	752
	756
	763
203-9369	743
	747
	752
	756
	763
203-9991	1890
	1893
	1894
204-0135	1431
	1434
	1437
204-0157	743
	747
	752
	823
204-0341	1411
204-0721	1944
204-0722	1944
204-1340	1614
	1640
204-1505	928
204-2281	529
	531
	612
	670
	756
	763
	999
204-2640	1411
204-3546	843
204-3547	▶843
204-3611	1729
204-4853	1993
	▶2087
204-5486	1993
204-6050	1285
204-6286	1569
204-6287	950
	▶1569
204-7846	190
	194
204-7847	194
204-7949	▶415
	1831
204-8000	522
	529
	531
	612
	670
204-9316	▶84
	85
204-9523	1993
204-9524	1993
204-9525	1993
204-9734	252
	582
	585
204-9957	1993
205-0626	276
205-1115	1993
205-3239	1166
205-3583	1276
205-6051	846
	848
	850
	853
	856
205-6388	1879
	1884
	1887
205-8212	1894
205-9184	777
	784
	791
	798
	805
205-9293	179
206-1345	603
206-2723	2067
	2072
	2075
	2078
	2081
	2084
206-2726	1135
206-2736	748
206-4227	13
	15
	17
	▶77
206-5823	1812
206-9295	723
207-0449	19
	20
	21
	22
	▶85
207-0533	1907
	1908
207-0534	1907
	1908
207-0535	1907
207-0547	1907
	1908
207-0580	310
207-0581	310
207-0695	1551
	1553
	▶1638
207-1462	777
	784
207-1810	1405
207-4720	1421
207-4721	1421
207-5248	121
207-6901	321
207-7025	322
207-7030	▶322
207-8128	145
207-8218	1605
	1610
208-0545	▶463
	859
208-1629	774
208-2479	1709
208-3778	1763
208-3779	1763
208-5022	1908
208-5150	1908
208-5260	2001
	2002
208-5261	1983
208-5262	▶2001
208-5281	2002
208-5282	2002
208-5283	2002
208-5284	2002
208-5285	2002
208-5286	2002
208-5336	▶1997
208-7448	199
208-7948	1169
208-8094	822
208-8661	719
208-8840	▶2001
208-8841	▶2001
209-0381	485
	492
	499
	509
	518
	1763
209-3569	39
209-4573	167
	170
	173
209-4580	167
	170
	173
209-5018	1860
209-6638	329
	330
	335
	336
209-6694	677
209-6696	712
209-7659	234
	238
210-1235	▶1982
210-1236	▶1944
	1982
210-2037	1944
210-2038	1944
210-2145	1944
210-2262	1854
210-2263	1854
210-2266	1854
210-2270	▶1854

▶ PRIMARY REFERENCE

PART NUMBER INDEX

Part	Page
	1880
	1882
	1885
210-5692	777
	784
	791
	798
	805
210-6783	1894
210-8423	▶329
	▶330
	353
210-8620	1295
	1302
	1311
210-9246	153
	154
211-0247	924
	926
211-0248	913
	916
211-3122	67
	68
	69
	71
211-3123	67
	68
211-4942	1890
	1899
211-5358	1903
211-9047	1697
211-9294	1903
212-0907	1413
	1415
	1417
	1419
212-6027	1661
212-6862	1446
	1449
	1452
	1455
	1458
	1460
212-6933	167
212-8712	1572
	▶1617
212-8739	846
212-8746	1575
	▶1621
212-9580	▶231
	265
213-3217	115
213-3221	1546
213-4740	234
	238
	242
	246
	▶265
213-4998	331
	332
213-5268	1540
	▶1541
213-7465	1338
	1342
213-7466	1338
	1342
213-9100	473
214-0783	▶1692
214-0784	1692
214-1639	1413
	1415
	1417
	1419
214-2445	1546
	1555
214-2484	410
	412
	▶430
214-4208	548
	559
	568
	576
214-4862	▶416
	1709
	1713
214-4863	▶417
	1276
214-5431	1950
214-5432	1950
214-6364	1950
	1958
214-6365	1950
	1958
214-6367	1950
	1958
214-6489	1546
	1555
214-7566	77
	402
214-7568	73
	119
	229
	238
	242
	246
	247
	613
	723
	799
	806
	850
	856
	878
	879
	880
	1286
	1302
	1311
	1354
	1359
	1401
	1403
	1434
	1437
	1470
	1489
	1496
	1555
	1591
	1596
	1604
	1609
	1661
214-7634	▶1700
	1909
	1912
	1915
	1919
	1923
214-7635	▶1701
	1909
	1912
	1915
	1919
	1923
214-8899	1993
214-8900	1993
214-9523	1519
	1521
215-1933	331
	332
215-1942	1413
	1415
	1417
	1419
215-2423	916
215-2424	916
215-2425	913
215-2426	913
215-5503	1993
215-6406	595
215-9554	943
216-0273	730
216-2515	1541
216-3011	1084
	1131
216-3681	1950
216-3683	1950
	1958
	1977
216-4884	688
	693
	698
216-4889	688
	693
	698
216-5342	850
	876
	▶878
216-5582	59
	62
	65
216-8978	1544
	▶1546
216-9195	1346
	1350
	1354
	1359
217-0641	1446
	1455
	1460
217-0642	1446
	1455
	1460
217-0643	1446
	1455
	1460
217-0751	59
	62
	65
217-0752	59
	62
	65
217-1557	943
217-2708	641
	643
	647
	649
	850
	856
	▶879
217-3549	1160
217-4521	1413
	1415
217-4590	232
	234
	238
	242
	246
	256
	605
	608
217-4652	▶2002
217-5073	1413
	1415
217-5074	1413
	1415
217-5911	1517
217-6284	324
217-6566	1417
217-6567	1413
217-6719	▶1399
	▶1401
	1604
	1609
	1614
	1617
	1621
	1626
	1631
	1640
217-6720	▶1403
	1604
	1609
	1617
	1621
	1626
	1631
217-6885	170
	173
217-7850	▶1290
	▶1292
	1443
217-7933	1854
217-8763	1413
	1415
	1417
	1419
217-8938	33
217-8946	208

▶ PRIMARY REFERENCE

PART NUMBER INDEX

Part	Page
217-9049	1880
	1882
217-9060	179
	184
218-0324	▶1706
	1707
218-0861	1880
	1882
218-2373	878
	879
	880
218-9733	1417
	1419
218-9894	884
	1657
	1659
219-0305	2088
219-0313	209
219-0601	392
219-0602	392
219-1438	1413
	1415
	1417
	1419
	1422
	1423
219-2432	595
219-4418	297
219-4443	13
	15
	17
	▶147
219-4458	115
219-4960	1285
219-4961	1286
219-4977	▶961
	1410
219-5023	978
	▶1369
	1410
219-5029	6
	7
	8
	9
	10
	11
	▶954
219-5030	1369
219-5031	6
	7
	8
	9
	10
	11
	▶935
219-5032	935
219-5038	1181
	1183
	1195
	1197
219-5039	1181
	1183
	1227
	1229
	1230
219-5053	937
219-5055	935
219-5066	▶937
	1410
219-5073	1070
	1074
	1078
219-5074	1070
	1074
	1078
219-5098	1405
219-5120	1405
219-5155	1285
	▶1322
219-8899	822
219-9521	485
	492
	499
	509
219-9522	395
	397
219-9523	485
	492
	499
	509
219-9533	486
	493
	500
	512
219-9536	465
220-0812	1564
220-1432	▶1272
	1285
	1295
	1302
	1311
220-1441	19
	20
	21
	22
	▶115
220-1645	1405
220-1646	1405
220-1650	1405
220-1657	1405
220-1659	1405
220-1828	1697
220-2779	774
220-2782	2088
220-2917	13
	15
	17
	▶146
220-2948	1564
220-3444	1139
	1141
	1143
220-3445	1139
	1141
	1143
220-3446	1139
	1141
	1143
220-3447	1290
	1292
220-3448	1290
	1292
	1309
220-6043	677
220-6079	994
	1562
220-6372	13
	15
	17
	▶210
220-7087	595
220-8358	486
	493
	500
	512
220-8678	231
220-8796	739
	760
220-9110	2045
	2055
220-9168	▶2055
220-9169	▶2045
221-0130	1405
221-0134	1405
221-0135	1405
221-1426	210
221-1879	739
	760
221-1880	739
221-1881	739
	760
221-1882	739
221-3404	1080
	1082
	1084
	1088
	1090
	1131
	1134
221-3405	617
	624
	628
221-3416	▶422
	427
	657
221-3440	1564
221-3481	1564
221-4015	1564
221-4201	1562
	1563
	▶1564
221-5303	221
221-5304	221
221-5377	1405
221-5459	1562
221-5470	1562
221-5471	1562
221-5472	1562
221-6807	▶1562
221-6808	▶1562
	▶1563
221-7693	220
	221
221-8690	267
221-8691	▶220
	232
	233
221-8693	220
221-9963	1661
222-0345	▶1879
	1884
	1887
222-1549	677
222-2029	1139
	1141
	1143
222-2030	1139
	1141
	1143
222-2402	1318
222-2403	1318
222-2404	1318
222-3584	961
222-3756	978
	▶1318
	1410
222-4436	1590
	▶1604
222-4737	1605
	1610
	1617
	1621
	1626
	1631
	1653
222-6713	721
222-6869	1465
	1471
223-0147	209
223-2102	1542
	1543
223-2112	766
	770
223-3490	2075
	2081
223-4254	▶774
	821
223-4263	1465
	1470
223-4296	292
223-4591	220
223-5118	190
	192
	194
	196
223-5814	147
223-5836	887
223-7263	▶59
	62
	67
	69
223-8112	2045
223-8114	▶1928
223-8115	▶1929
223-8116	▶1930
223-8132	2046
223-8134	1962
	1969
223-8969	463
223-8971	486

▶ PRIMARY REFERENCE

PART NUMBER INDEX

Part	Page
	493
	500
	512
223-8972	486
	493
	500
	512
223-8975	358
	360
223-8976	486
	493
	500
223-8979	465
223-8982	486
	493
	500
	512
223-9159	115
223-9250	▶67
	▶68
	▶69
	70
223-9732	19
	20
	21
	22
	▶47
224-0672	1272
224-2687	212
224-2735	568
	576
224-2988	221
224-3245	115
224-3246	115
224-3872	1521
224-3951	1178
	▶1267
224-3952	997
	999
	1007
	1012
	1016
	1020
	1025
	1029
	1078
	1096
	1105
	1109
	1118
	1122
	1126
224-3953	997
224-3954	997
	999
	▶1178
224-3955	▶997
	▶999
	1149
	1150
	1152
	1153
	1154
224-3957	1178
	1180
	1262
224-3958	997
	999
224-3979	14
	16
	▶2091
224-3983	59
224-4044	▶956
	1149
	1150
	1152
	1153
	1154
224-4057	▶1001
	▶1004
	1149
	1150
	1152
	1153
	1154
224-4229	914
	▶916
224-4325	1001
	1004
224-4326	1180
	▶1268
224-4327	1179
	▶1269
224-4328	1001
	1004
	▶1179
224-4329	1001
224-4330	1001
	1004
224-4331	1001
	1004
224-4332	1001
	1004
224-4333	1001
	1004
224-4334	1001
	1004
224-4335	1001
	1004
224-4338	1001
	1004
	▶1180
224-4404	1181
224-4405	1181
224-4410	1007
	1012
	1105
	1122
	▶1181
	▶1183
224-4411	1078
	▶1185
224-4415	997
	999
	▶1159
224-4416	1007
	1012
	1016
	1020
	1025
	1029
	1034
	1038
	1042
	1046
	1050
	1056
	1070
	1074
	1078
	1092
	1096
	1100
	1105
	1109
	1113
	1118
	1122
	1126
224-4417	1007
	1012
	1016
	1020
	1025
	1029
	1034
	1038
	1042
	1046
	1050
	1056
	1070
	1074
	1078
	1092
	1096
	1100
	1105
	1109
	1113
	1118
	1122
	1126
224-4420	1181
	1183
	1195
	1197
	1227
	1229
	1230
	▶1270
224-4422	1185
	1191
	1193
	1200
	1202
	1241
	1242
	1244
	1257
	1258
	1259
	▶1271
224-5122	70
	73
224-7696	221
224-9280	348
	▶392
224-9454	199
224-9455	1
	2
	▶199
224-9456	158
	▶190
	▶192
225-0312	2089
225-0313	2090
225-1144	43
225-1148	▶43
	45
225-2646	1673
225-2647	1673
	1674
	1675
225-2648	1007
	1012
	1034
	1038
	1042
225-3281	1334
	1335
	1336
225-3289	1417
	1419
	1428
	1430
225-3290	1413
	1415
	1422
	1423
225-4256	2090
225-4257	2089
225-4278	▶3
225-5235	1
	2
	▶968
	▶971
	▶974
225-5237	968
	971
	974
225-5239	968
	971
225-5240	968
	971
225-5432	▶1
	3
225-5449	3
	▶1443
225-5452	3
	▶304
225-5455	3
	▶821
225-6065	▶13
225-6106	12
	▶15
225-6319	1
	2
	▶167
	▶170

▶ PRIMARY REFERENCE

PART NUMBER INDEX

Part	Page
	▶173
	▶176
225-6320	167
	170
	173
	176
225-6330	190
	192
225-6331	190
	192
225-6332	190
225-6333	158
	▶194
	▶196
225-6334	1
	2
	▶943
	▶945
	▶947
225-6709	▶777
	▶784
	▶791
	▶798
	1443
225-6712	777
	784
	791
	798
	805
225-6713	777
	784
	791
	798
	805
225-6714	777
	784
	791
	798
	805
225-6716	1443
	1444
	▶1475
	▶1481
	▶1488
	▶1495
225-6717	1475
	1481
	1488
	1495
225-6719	1475
	1481
	1488
	1495
225-6720	1475
	1481
	1488
	1495
225-6723	1475
	1481
225-6724	1475
	1481
	1488
	1495
225-6725	▶158
225-6841	304
	305
	▶313
	▶315
	▶317
225-6845	347
	348
	▶351
225-6851	304
	305
	▶582
	▶585
	▶589
	▶592
225-6852	304
	▶605
225-6856	304
	▶654
225-6859	304
	▶617
	▶624
225-6993	347
	348
	▶353
225-6999	346
	347
	▶370
	▶374
	▶378
225-7922	1
	2
	▶929
	▶932
225-8334	1
	2
	▶234
	▶238
	▶242
	▶246
225-8337	▶1166
225-8338	▶1166
225-9199	201
225-9482	1946
	1948
	1950
	1952
	1954
	1956
	1958
	1960
	1962
	1965
	1967
	1969
	1972
	1974
	1977
	1979
	1980
225-9602	1946
	1948
	1950
	1952
	1954
	1956
	1958
	1960
	1962
	1965
	1967
	1969
	1972
	1974
	1977
	1979
	1980
226-0306	232
	256
226-0307	4
	▶256
226-0483	319
226-0947	4
	▶232
226-0960	▶318
226-0961	5
	233
	318
	▶319
226-1236	533
	541
226-1240	2089
226-1242	2090
226-1244	▶233
226-1274	2089
226-1275	2090
226-1954	▶158
226-1955	1431
226-1956	▶158
226-1957	158
	▶1542
226-1958	777
	784
	1477
226-1970	859
	▶2067
226-1971	859
	▶2072
226-1973	1431
	1434
	1437
226-1982	1431
	1434
	1437
226-2040	1443
	1444
	▶1540
226-2045	1346
	1350
	1354
226-2051	304
	▶307
226-2060	304
	305
	▶309
226-2061	304
	▶311
226-4222	184
226-4737	14
	16
	18
226-5561	59
	65
226-6571	205
226-9431	234
	238
	242
	246
226-9613	1774
226-9643	3
	▶23
226-9798	1166
	▶1167
226-9799	1167
226-9801	1167
226-9802	1167
227-0091	1167
227-0213	1752
	1754
227-0966	1680
	1681
	1683
	1685
	▶1709
227-1069	1547
227-1204	53
	55
	57
227-1369	1788
	1790
227-2441	1788
	1790
227-3047	1034
	1038
	1042
	▶1186
227-3048	1034
	1038
	1042
	▶1188
227-3190	▶1702
	1820
227-3192	1702
	1703
	1704
	1705
	▶1828
227-3198	1702
	1703
	1704

▶ PRIMARY REFERENCE

PART NUMBER INDEX

Part	Page
	1705
	▶1830
227-3200	1
	▶1820
227-3213	1285
227-3216	1462
227-3232	269
227-3250	1070
	1074
	1078
227-3253	1179
	1216
227-3254	1001
	1004
227-3255	1227
	1229
227-3269	979
	▶994
227-3270	▶1747
	1872
	1875
227-3275	1405
227-3276	1405
227-3281	1405
227-3316	1424
	1426
227-3317	6
	7
	8
	▶1410
227-3704	75
227-3705	13
	15
	17
	▶75
227-3791	394
	400
227-3792	▶394
227-3812	223
227-3872	135
227-3917	13
	15
	17
	▶149
	▶150
	▶151
227-4002	601
	603
227-4239	62
227-4564	13
	15
	▶179
227-5373	304
	▶641
	▶643
227-7390	2090
227-7391	2089
227-7392	1700
	1701
227-8837	1431
227-9980	14
	16
	17
	▶114
228-0376	158
	▶1543
228-0755	1172
	1174
	1176
228-0918	1679
	1680
	1682
	1684
	▶1713
228-0919	1768
228-0920	1702
	1703
	1704
	1705
	▶1768
	▶1771
228-1787	1
	2
	▶266
228-2615	2090
228-2616	2089
228-3636	1543
	▶1551
228-3638	1542
	▶1553
228-4388	2067
	2072
228-4389	2067
	2072
228-4390	2067
228-4391	2067
	2072
228-4392	2067
	2072
228-4393	2067
	2072
228-4394	2067
	2072
228-4395	2067
	2072
228-4396	2067
	2072
228-4397	2067
	2072
228-4403	2067
	2072
228-4727	1946
	1948
	1950
	1952
	1954
	1956
	1958
	1960
	1962
	1965
	1967
	1969
	1972
	1974
	1977
	1979
	1980
228-4947	430
	431
228-6089	522
228-6562	1722
228-6563	▶1722
	1803
228-7024	1405
228-7026	743
228-7089	154
228-7092	770
228-9514	485
	492
	499
	509
	522
228-9530	1702
	▶1860
228-9535	1860
228-9624	1702
	1703
	1704
	▶1890
228-9628	1702
	1703
	1704
	1705
	▶1761
229-0066	1695
	▶1795
229-0659	743
	747
	752
229-1494	1884
	1887
229-2106	358
229-2257	1828
229-2622	1070
	1074
	▶1189
229-3177	618
	624
	628
	635
229-5669	2091
229-5843	13
	15
	▶250
229-6259	115
229-6388	▶2002
229-7114	▶1931
229-7134	▶1932
229-7316	882
229-8122	777
	784
	791
	798
	805
229-8429	1950
229-8435	1950
229-8568	▶48
	49
229-9969	329
	330
229-9972	329
229-9974	329
	330
	335
	336
	337
	338
230-0104	13
	15
	17
	▶40
230-0877	1413
	1415
	1417
	1419
230-0915	1417
	1419
230-1434	441
230-2400	1443
	▶1465
230-2406	1443
	▶1544
230-2407	▶1294
	▶1302
	1443
230-2410	▶1431
	▶1434
	1443
230-2569	115
230-3633	688
	693
	698
	▶721
230-3728	261
	263
230-3775	261
	263
230-4011	225
	229
	461
230-4012	225
	229
230-4182	1
	2
	▶1158
230-4183	1158
230-4186	1158
230-5008	608
	612
	629
	635
	636
	647
	651
230-5378	14
	16
	18
	▶119
230-5669	▶347
230-5671	▶348
230-5672	▶346
230-5673	▶347
230-5771	1338
230-6315	821
	▶872
230-6316	▶811
	872
230-6317	▶679
	872

▶ PRIMARY REFERENCE

PART NUMBER INDEX

Part	Page
230-6318	▶680
	▶682
	872
230-7913	▶1417
	▶1419
	1424
	1426
230-7914	▶1413
	▶1415
	1424
	1426
230-8152	370
	374
	378
	382
	386
	390
	391
	392
230-9085	1830
230-9087	1830
230-9101	1465
230-9446	79
230-9447	79
230-9501	1295
	1302
230-9715	370
	374
	378
	382
	386
	390
	391
	392
230-9716	382
230-9717	382
230-9800	1465
	1470
230-9802	1465
	1470
230-9804	1465
	1470
230-9961	211
230-9962	13
	15
	17
	▶211
230-9985	1413
	1415
231-0321	13
	15
	▶223
	▶225
231-1270	811
231-1955	▶1428
	1515
	1529
231-1957	1428
231-1960	1417
	1419
	1428
	1430
231-1973	14
	16
	18
	▶410
	▶412
231-2036	1166
	▶1169
	▶1170
231-2037	1169
231-2307	846
	▶862
231-3529	680
	682
231-3882	304
	305
	▶473
231-3947	259
231-4779	680
	682
	684
	686
231-4780	680
	682
	684
	686
231-4781	882
231-5295	679
231-6525	346
	348
	▶355
231-6526	346
	347
	348
	▶356
231-6558	533
	541
231-7084	23
	▶201
231-7090	23
	▶212
231-7705	777
231-7706	777
231-7842	▶859
231-7844	▶859
231-8177	▶1662
	1664
	1680
	1684
231-8178	1662
231-8900	680
	682
	684
	686
231-9006	266
	▶267
231-9411	▶395
231-9458	727
232-0134	▶1933
	1977
	1980
232-0135	▶1934
232-0136	▶1935
232-0138	1965
	1972
	1974
	1999
232-0139	1965
	1972
	1974
	1999
232-0154	▶1936
232-0155	▶1937
232-0156	▶1938
232-0161	▶2040
232-0167	▶1927
232-0209	▶710
	872
232-0253	121
	123
232-0347	23
	▶209
232-0348	212
232-0350	204
232-0362	23
	▶136
232-0364	23
	▶204
232-0366	211
232-1104	▶727
	872
232-1206	262
232-1293	680
	682
	684
	686
232-1374	234
	238
	242
	246
232-1376	234
	238
	242
	246
232-1693	295
	296
232-1767	220
	221
232-2112	2055
	▶2060
232-2114	1950
	1954
	1956
	1958
	1960
	1967
232-2117	▶1939
232-2139	2046
232-2154	▶1940
232-3235	115
232-3236	115
232-3243	485
	492
	499
	509
232-3346	307
232-3347	307
232-7562	533
	541
232-7610	346
	347
	▶465
233-0065	1551
	1553
	1974
	1999
233-0455	1560
233-0891	295
	296
233-1666	1709
233-1704	680
	684
	▶882
233-2545	533
	541
233-6045	1709
233-6046	464
	1150
	1151
233-6216	14
	16
	18
	▶601
	▶603
233-6358	1167
233-6742	223
	225
	227
	229
	▶270
	▶271
233-6745	1822
233-7154	▶1941
233-7155	▶1942
233-7156	▶1943
233-7183	23
	▶182
233-7185	182
233-7186	182
233-7245	20
	▶24
	▶25
233-8479	1
	2
	▶2088
233-8675	146
233-8676	138
233-8677	13
	15
	17
	▶138
233-9748	812
234-1400	2091
234-1401	2091
234-1902	1421
234-3550	743
	747
	752
	756
234-3551	743
	747
	752
	756
	763
234-5002	27
	29
234-5005	19
	20
	21
	▶27
	▶29

▶ PRIMARY REFERENCE

PART NUMBER INDEX

Part	Page
	▶30
234-5013	225
	227
	229
	▶437
234-5132	167
	170
	173
	176
234-5706	▶12
234-5925	548
	554
	560
	566
	574
234-6707	812
234-7935	19
	20
	21
	▶34
234-8937	90
234-8940	▶2063
234-9505	24
	25
234-9508	24
	25
235-0251	1295
	1303
	1311
235-0368	1080
	1082
	1088
	1090
	1134
235-0658	24
235-1054	13
	15
	17
	▶153
	▶154
235-1088	24
	25
235-1089	24
	25
235-1402	19
	20
	21
	22
	▶261
	▶262
	▶263
235-1587	157
235-1869	657
235-2415	862
235-2418	860
235-2506	▶657
	1802
235-2974	19
	20
	21
	▶70
235-3350	657
235-3595	223
	225
	227
	229
235-3937	▶344
	394
	395
	397
235-4123	519
	520
	521
235-4176	▶1802
235-5316	1172
	1174
	1176
235-8159	179
	184
235-8397	14
	16
	17
	▶117
235-8631	1160
236-0964	3
	▶2089
236-0966	▶2090
236-1059	1564
236-1239	1564
236-4545	441
236-4608	523
236-4610	523
236-4611	523
236-4631	367
	518
236-4674	1950
236-4675	1950
236-4676	1950
236-4689	1950
236-4690	1950
236-4693	1950
236-4694	1950
236-4695	1950
236-4696	▶1950
236-5197	1854
236-5420	774
236-5605	71
236-6253	1763
236-7043	▶1998
236-7226	2090
236-7227	2089
236-7530	▶2064
236-7753	1950
	1952
	1958
	1967
	1977
236-7772	1763
236-8117	2064
236-8675	1278
236-8722	485
	492
	499
	509
	522
237-0212	2088
237-0227	636
237-0974	887
237-1962	443
	▶444
	447
237-1964	13
	15
	17
	▶203
237-2227	238
	242
	246
237-3943	1903
237-3970	▶1693
	1903
237-9310	223
	225
	227
	229
237-9736	398
	400
237-9848	734
237-9849	734
238-0296	270
	▶272
238-1006	1062
	1064
	1067
	1084
	1131
	▶1172
	▶1174
	▶1176
238-2707	115
238-5078	39
238-5080	119
	154
	437
238-5081	271
238-5082	770
238-5084	109
	850
	856
238-8685	▶214
	215
239-0245	1954
	1956
	1960
	1980
239-0258	1956
	1960
239-0261	1956
	1960
239-0262	1956
	1960
239-0282	1768
	1771
239-1134	▶471
	472
239-2395	410
	412
	▶423
239-2396	223
	225
	227
	229
	410
	412
	▶424
239-3478	▶425
	426
239-4106	46
239-4111	▶44
	45
239-4113	13
	15
	17
	▶45
239-4258	887
239-4259	887
239-5674	410
	412
	▶426
239-5928	410
	412
	▶431
239-5929	601
	603
239-6304	179
	184
239-6986	2088
239-7440	908
239-7441	908
239-8129	213
239-9233	1475
	1481
	1488
	1495
239-9624	24
	25
	▶79
239-9660	1890
239-9954	▶302
	527
240-0284	1965
240-0285	1965
240-0286	1962
	1965
	1969
	1972
	1974
240-2653	23
	▶213
240-7983	1962
	1965
	1969
	1972
	1974
240-9083	1952
	1979
240-9085	1952
	1979
240-9087	1952
240-9088	1952
240-9499	1860
	1863
	1866
	1869
	1872
	1875
240-9687	1172
	1174
	1176
240-9689	1172

▶ PRIMARY REFERENCE

PART NUMBER INDEX

Part	Page
	1174
	1176
240-9690	1172
	1174
	1176
240-9692	1007
	1012
	▶1191
	▶1193
241-0037	1272
	1397
	1398
241-0478	▶92
	93
	95
241-3283	182
	203
241-4936	▶1845
	1850
241-4939	1846
241-5785	▶1827
	1885
241-5933	13
	17
	▶19
241-5934	15
	▶20
241-6186	410
	412
241-6215	1346
	1350
	1354
241-8368	▶457
	533
	541
	548
	554
	560
	566
	574
241-8538	1160
241-9265	209
242-3360	214
	218
	219
242-3375	153
	154
242-3376	153
242-5175	908
242-5176	908
242-5177	158
	▶908
242-9537	41
	43
	44
	46
243-0774	523
243-0943	▶61
	62
243-1159	41
	43
	44
	46
243-1277	805
243-1560	13
	15
	17
	▶295
	▶296
243-3177	1413
	1415
	1417
	1419
243-3720	1515
	1523
243-5499	659
	660
	662
	663
243-5786	13
	15
	17
	▶93
243-5875	▶1007
	▶1012
	1149
243-5885	1149
	1150
	▶1674
243-5929	1016
243-5930	1007
	1012
	1034
	1038
	1042
243-5932	1007
	1012
	1016
	1020
	1025
	1029
	1034
	1038
	1042
	1046
	1050
	1056
243-5937	1674
	1675
243-5938	1007
	1012
	1034
	1038
	1042
243-5942	1191
	1193
	1204
	1206
243-6718	47
243-6741	▶62
	68
244-3114	680
	682
	684
	686
	▶880
244-3712	850
	856
244-6626	167
	170
	173
244-6908	1905
244-7716	261
245-6447	1716
	1718
245-7434	518
	520
	1807
245-7465	879
246-0561	1405
246-2293	1777
	1781
	1785
246-2294	1777
	1781
	1785
246-2305	1449
	1452
	1458
246-2321	1449
	1452
	1458
246-2322	▶1519
	1679
	1680
246-2323	▶1521
	1680
	1681
246-2641	266
	900
	902
	904
	968
	971
	974
	2062
246-2686	323
246-2689	5
	▶323
246-2753	▶1946
246-2754	▶1984
246-2755	▶1952
	1984
246-2756	▶1954
246-2757	▶1956
246-2764	1958
	1967
246-2765	▶1958
246-2766	1956
	1960
246-2767	▶1960
246-2768	1962
	1969
246-2769	▶1985
246-2770	▶1962
	1985
246-2771	▶1986
246-2772	▶1965
	1986
246-2812	739
	760
246-2813	739
246-2817	743
	747
	752
	756
246-2818	743
	747
	752
	756
	763
246-2828	1405
246-3513	324
246-3514	5
	▶324
246-4304	1827
246-4306	1827
246-4307	1827
246-4395	209
246-4545	703
	▶739
246-4546	743
	747
	752
	756
	763
246-4547	688
	693
	698
246-4548	688
	693
	698
246-4549	688
246-4551	688
246-4552	688
	693
	698
246-4553	688
	693
	698
246-4555	703
	▶766
	▶770
246-4559	743
	747
	752
	756
	763
246-4561	704
	706
	708
246-5659	115
246-6036	154
246-6624	14
	16
	18
	▶215
	▶216
	▶217
246-6720	331
	332
246-6921	▶1523
	1679
	1680
246-6923	▶1449
	1680
246-9308	777
	784
	798
247-0293	▶331

▶ PRIMARY REFERENCE

PART NUMBER INDEX

Part	Page
	358
247-0294	▶332
	358
247-0848	1
	2
	▶441
247-0849	441
	▶472
247-4969	1716
	1718
247-5556	441
247-6050	264
	265
247-7033	▶1149
247-7034	▶1149
247-8529	1346
247-8530	1346
247-8531	1346
247-8532	1346
247-8535	1346
247-8536	1346
	1350
247-8537	1346
247-8538	1346
	1350
247-8540	▶1346
	▶1350
	1443
247-9908	69
	71
248-0102	982
248-1130	945
248-4068	295
248-4152	▶1846
	1847
248-5513	179
	184
248-6340	▶1663
	1665
	1679
	1682
248-6341	1663
248-6350	▶1667
	1679
	1680
	1682
	1683
248-6351	1667
	1668
248-6352	1667
	1668
248-6354	1667
	1668
248-6357	1667
	1668
248-8889	201
	▶202
249-0945	202
249-5482	467
249-5615	▶1380
	1724
249-5616	1380
249-7734	139
	141
	143
249-7738	13
	15
	▶139
	▶141
250-0466	53
	55
	57
250-1423	752
	756
	763
250-1440	1285
250-3474	1703
	1704
250-3480	1866
	1869
250-4628	1822
	1825
	1826
250-4906	1703
	1704
250-5634	1295
	1303
	1312
250-8402	1948
250-9328	1555
250-9329	1546
250-9378	79
250-9983	887
251-2029	464
251-2180	1986
	1988
	1990
251-2461	1986
	1988
	1990
251-3113	1444
	1445
	▶1507
251-4160	524
	525
251-4162	524
	525
251-4243	1736
251-5849	367
251-6192	1167
251-6730	1986
	1988
	1990
251-7828	1555
251-8248	524
	525
	1736
	1738
251-9991	1285
252-0745	1538
252-1285	1346
	1350
	1354
	1359
252-2378	1090
252-4501	509
	518
	1731
252-4537	1546
	1555
252-9667	▶2065
	2088
252-9668	2065
252-9669	2065
253-0066	2038
253-0067	2038
253-0575	1894
253-0616	263
253-0861	2066
253-1752	47
253-2111	534
	542
	549
	555
	560
	566
	574
253-2596	1430
253-4280	1346
	1350
	1354
253-4768	704
	706
	708
253-4787	▶1442
	1444
	1445
253-4788	1444
	1445
	▶1600
253-7135	1285
253-8745	968
	971
	974
253-8766	49
	51
253-9967	1893
253-9968	1893
253-9969	▶1893
254-2162	1893
254-3214	1430
254-4957	404
254-5665	822
254-6062	▶1410
254-6063	▶1405
	1410
254-6999	154
254-7000	154
254-7018	1295
	1303
254-8155	▶333
	368
	369
254-9146	1894
254-9147	1894
255-0040	▶1679
255-0041	▶1680
255-0042	▶1680
255-0043	▶1681
255-0614	1007
	1012
	1016
	1020
	1025
	1029
	1034
	1038
	1042
	1046
	1050
	1056
	1070
	1074
	1078
	1092
	1096
	1100
	1105
	1109
	1113
	1118
	1122
	1126
255-6691	1946
	1948
	1952
	1954
	1956
	1958
	1960
	1962
	1965
	1967
	1969
	1972
	1974
	1977
	1979
	1980
255-6692	1946
	1948
	1952
	1954
	1956
	1958
	1960
	1962
	1965
	1967
	1969
	1972
	1974
	1977
	1979
	1980
255-6694	1946
	1948
	1952
	1954
	1956
	1958
	1960
	1962
	1965
	1967
	1969
	1972
	1974
	1977
	1979
	1980

▶ PRIMARY REFERENCE

PART NUMBER INDEX

Part	Page
	1980
255-6695	1946
	1948
	1952
	1954
	1956
	1958
	1960
	1962
	1965
	1967
	1969
	1972
	1974
	1977
	1979
	1980
255-6710	1952
	1954
	1956
	1958
	1960
	1962
	1965
	1967
	1969
	1972
	1974
	1977
	1979
	1980
255-6711	1946
	1948
	1952
	1954
	1956
	1958
	1960
	1962
	1965
	1967
	1974
	1977
	1979
	1980
255-6712	1946
	1948
	1952
	1954
	1956
	1958
	1960
	1962
	1965
	1967
	1974
	1977
	1979
	1980
255-6961	▶891
	▶892
	1679
	1680
	1682
	1683
255-6963	891
255-7139	▶659
	1679
	1680
	1682
	1683
255-8204	▶1665
	1680
	1683
255-8232	966
255-8239	966
255-8243	1
	2
	▶966
255-8244	966
255-8245	966
255-8246	966
256-1142	358
	360
	367
256-1143	358
	360
	367
256-2211	250
256-2213	250
256-2214	250
256-3839	945
	947
256-6453	437
256-7823	467
256-9817	279
	283
	287
257-0051	304
	▶533
257-0053	533
	541
257-1778	1986
	1988
	1990
257-1779	1986
	1988
	1990
257-1781	1986
	1988
	1990
257-1782	1986
	1988
	1990
257-1783	1986
	1988
	1990
257-1784	1986
	1988
	1990
257-1817	▶2028
257-1818	▶2029
257-1819	▶2030
257-1821	▶2031
257-1822	▶2032
257-1823	▶2033
257-2537	1
	2
	▶924
	▶926
257-3226	1777
	1781
	1785
257-3448	657
257-3649	1954
257-3651	1946
	1948
	1952
	1954
	1956
	1958
	1960
	1962
	1965
	1967
	1969
	1972
	1974
	1977
	1979
	1980
257-3655	1946
	1948
	1954
	1956
	1960
	1962
	1965
	1969
	1972
	1974
	1980
257-3657	1962
	1969
257-3658	1962
	1969
257-3659	1962
	1969
257-3660	1962
	1965
	1969
	1972
	1974
257-3663	1954
257-3664	1954
257-3665	1954
257-3667	1946
257-3669	1946
257-3670	1946
257-3671	1946
257-3672	1946
257-3673	1946
257-3679	1946
	1948
257-3695	1965
257-3697	1965
	1972
	1974
257-3698	1965
	1972
	1974
257-4183	▶674
257-5028	▶279
	304
257-5075	304
	305
	▶479
	▶480
257-5076	479
257-7676	1328
257-7804	1346
	1350
	1354
	1359
257-7805	703
	▶704
	▶706
	▶708
257-7806	743
257-7807	743
257-7808	766
	770
257-7809	688
	693
	698
257-7810	703
	▶743
	▶747
	▶752
	▶756
257-7811	688
257-7814	766
	770
257-7815	▶688
	▶693
	▶698
	704
	706
	708
257-7816	766
258-0883	223
	▶460
258-4142	548
	554
	560
	566
	574
258-4524	214
	218
	219
258-5060	766
	770
	▶822
258-7014	828
258-7015	828
258-7916	657
258-8721	121
	123
	124
	125
	127
	128
258-9757	605
	608
259-0576	828
	829
259-1228	595
259-1965	605
259-1986	595
259-2095	347

▶ PRIMARY REFERENCE

PART NUMBER INDEX

Part	Page
	▶382
259-2401	1
	2
	▶1139
	▶1141
	▶1143
259-2402	▶1145
	1146
259-2403	1145
259-2404	1145
259-2405	▶1150
259-2406	▶1016
	▶1020
	▶1025
	▶1029
	1150
259-2407	1016
	1020
	1025
	1029
	1096
	1118
	▶1195
	▶1197
259-2408	1016
	1020
	1025
	1029
	▶1200
	▶1202
259-2409	1016
	1020
	1025
	1029
	1046
	1050
	1056
259-2410	1016
	1020
	1025
	1029
	1046
	1050
	1056
259-2411	1007
	1012
	1016
	1020
	1025
	1029
	1034
	1038
	1042
	1046
	1050
	1056
259-2414	1034
	1038
	1042
	▶1204
	▶1206
259-2415	1016
	1020
	1025
	1029
	1046
	1050
	1056
259-2416	1016
	1020
	1025
	1029
	1046
	1050
	1056
259-2417	1016
	1020
	1025
	1029
	1046
	1050
	1056
259-2418	1200
	1202
	1208
	1210
259-2419	1200
	1202
	1208
	1210
259-2420	4
	▶1146
259-2421	1183
	1186
	1188
	1195
	1197
	1212
	1214
	1247
	1250
	1252
	1253
259-2422	1046
	1050
	1056
	▶1208
	▶1210
259-2423	1195
	1255
259-2424	1195
	1227
	1229
259-2425	1150
	1151
	▶1668
259-2426	1668
	1670
259-2427	1668
	1670
259-2428	1668
259-2429	1668
259-2430	1150
	1151
	▶1675
259-2431	1046
	1050
	1056
	▶1212
	▶1214
259-2432	1046
	1050
	1056
	▶1216
	▶1219
259-2433	▶1034
	▶1038
	▶1042
	1150
259-2434	▶1046
	▶1050
	▶1056
	1151
259-2435	▶1150
259-2436	▶1151
259-2437	▶1151
259-2438	1046
	1050
	1056
	1092
259-2439	1046
	1050
	1056
	1092
259-2440	1046
	1050
259-2441	▶1062
	▶1064
	▶1067
	1150
	1151
259-2442	1062
	1064
	1067
	1084
	▶1147
259-2443	1147
259-2444	▶1070
	▶1074
	1151
259-2445	1070
	1074
	▶1221
259-2446	1070
	1074
	▶1223
259-2447	1062
	1064
	1067
	▶1225
259-2448	1078
	1109
	1126
	▶1227
	▶1229
	▶1230
259-2449	▶1078
	1149
259-2450	▶1080
	▶1082
	1150
	1151
259-2451	1080
	1082
	▶1231
259-2452	▶958
	1150
	1151
	1152
	1153
	1154
259-2453	1080
	1082
	▶1233
259-2454	1080
	1082
	1088
	1090
259-2458	1193
	1202
	1206
	1210
259-2467	1007
	1012
	1020
	1025
	1029
	1034
	1038
	1042
	1046
	1050
	1056
	1092
	1056
259-4397	1735
	1807
259-4399	1735
	1807
259-4694	▶1397
	1405
259-4695	▶1398
259-4733	1332
	▶1334
259-4737	1332
	▶1335
259-4738	1335
259-4739	1334
259-5825	347
	348
	▶358
	▶360
259-6275	1405
	▶1653
259-7143	1405
259-7155	641
259-8339	582
259-8357	143
259-8449	▶703
259-9251	617
	624
260-0081	▶474
	1149
	1150
	1152
	1153
	1154
260-0194	582
	585
	589
	592
260-0254	279

▶ PRIMARY REFERENCE

PART NUMBER INDEX

Part	Page
	283
	287
260-0255	279
	283
	287
260-0256	279
	283
	482
260-0266	13
	15
	▶402
260-0443	351
260-0445	370
	374
	378
	382
260-0446	370
	374
	379
	382
260-0447	351
	363
	370
	374
	378
	382
	386
260-0859	441
260-0907	605
260-1395	654
260-1400	▶893
	▶895
	1680
	1681
	1684
	1685
260-1401	893
260-1578	182
260-3158	304
	▶595
260-3198	533
	542
	548
	554
	560
	566
	574
260-7652	325
	2090
260-7653	325
	2089
260-8638	533
	542
	548
	554
	560
	566
	574
260-8902	822
260-8903	822
260-8904	822
260-8905	822
260-9143	805
260-9155	1993
260-9234	238
	242
	246
260-9236	238
	242
	246
261-0052	▶49
	53
261-0191	19
	20
	21
	22
	▶53
	▶55
	▶57
261-0400	▶484
	▶491
	▶498
	▶508
	1702
	1703
	1704
261-0410	485
	492
	499
261-0411	486
	492
	499
	509
261-0412	486
	493
	500
261-0413	486
	493
	500
261-0416	▶462
	1410
261-1463	6
	7
	8
	9
	10
	11
	▶872
261-1510	6
	7
	8
	9
	10
	11
	▶939
261-1515	405
261-1516	7
	9
	▶1424
	▶1426
261-1517	1424
	1426
261-2893	▶684
	▶686
	872
261-3024	279
261-3222	1735
	1807
261-3223	524
	525
261-3224	1735
261-3226	▶1735
	1736
	1738
261-3429	59
	62
	65
261-3430	59
	62
	65
261-3650	279
	283
	482
261-3770	534
261-3855	280
	284
	287
261-3857	▶810
	827
261-3862	▶827
	845
261-3863	827
	▶828
261-4911	462
261-5694	1823
	1824
	1826
261-8023	659
261-8024	660
261-8025	▶660
	1680
	1681
	1684
	1685
261-9418	534
	542
	548
	554
	560
	566
	574
261-9420	534
	542
	548
	554
	560
261-9424	907
261-9433	907
261-9434	534
	542
	548
	554
	560
	566
	574
	▶907
262-0494	176
262-0558	▶475
	1150
	1151
262-1352	1827
262-1421	▶306
	528
	574
262-1557	827
	▶828
262-2878	296
262-3887	475
262-4158	534
	542
262-4948	23
	▶1707
262-5046	23
	▶278
262-5236	1716
262-5237	1718
262-5239	1716
	1718
262-5240	1716
	1718
262-5490	▶844
262-5491	844
262-6754	214
262-6880	123
262-7100	102
	▶123
262-8009	776
263-1493	459
	522
263-3217	684
	686
263-4920	59
	65
263-5055	▶71
	73
263-5374	13
	15
	17
	▶143
263-7358	23
	▶274
263-7732	1546
	1555
263-9088	292
	294
	▶1853
264-0010	1546
	1555
264-1440	1777
	1781
	1785
264-2226	▶2061
264-4297	438
	439
264-5111	595
264-7029	229
	461
264-7030	636
264-7031	612
	636
	651
264-7671	292
264-9879	559
264-9880	559
265-2834	427
265-8171	522
265-8218	▶1983
265-8219	▶1948
	1983
265-8220	1948

▶ PRIMARY REFERENCE

PART NUMBER INDEX

Part	Page
265-8221	1948
265-8223	1948
265-8231	▶1967
265-8232	1967
265-8234	1967
265-8235	1967
265-8236	1967
265-9091	23
	▶447
	▶448
266-0195	216
	▶218
266-2337	407
	409
	▶418
266-2861	292
266-3699	20
	▶102
	▶103
	▶104
266-4234	1777
	1781
	1785
266-4236	1777
266-8577	643
	647
	649
	651
266-9266	730
	734
266-9281	1827
267-2074	844
267-2075	▶844
267-3741	1555
267-3743	1555
267-4087	1179
267-4631	▶50
	51
	52
267-8338	549
	554
	560
	567
	575
267-8658	218
268-1708	1807
268-1960	158
	▶205
268-1961	158
	▶206
268-2960	218
	219
268-6497	459
	1716
	1718
268-9063	525
269-3947	23
	▶258
269-4136	123
269-5346	1239
	1243
	1245
	1263
269-5348	1237
	1249
	1252
	1253
	1254
	1262
269-5352	1235
	1238
	1247
	1250
	1255
	1260
269-5755	1546
269-6348	44
270-2481	1860
	1863
	1866
	1872
270-3561	945
	947
270-6873	527
	528
	574
270-7898	1555
270-9046	▶292
	▶294
	325
271-1750	844
271-4571	1600
271-4577	1444
	▶1601
271-4578	1442
271-4585	1507
271-4586	1507
271-4587	1525
	1526
	1537
271-4593	1601
271-4594	1600
271-5160	160
	▶164
271-5562	164
271-5563	164
271-5564	164
271-5565	164
271-6441	▶1430
	1523
	1527
271-6442	1430
271-7301	234
	238
	242
271-7303	234
	238
	242
	246
271-7459	▶669
	1444
	1445
271-8503	▶325
271-9062	325
	▶527
	▶528
271-9276	▶325
272-0390	29
	30
	32
272-0455	209
272-5068	1172
	1174
	1176
272-5090	▶1084
	1152
	1153
	1154
272-5091	1084
	▶1235
272-5092	▶1088
	▶1090
	1152
	1153
	1154
272-5093	1088
	1090
	▶1237
272-5094	1088
	1090
	▶1238
272-5098	1113
272-5100	1074
272-5475	766
	770
272-5605	1564
272-5606	1564
272-6641	▶334
	363
	365
	386
272-7981	1431
	1434
	1437
272-7990	1295
	1303
	1312
272-9800	344
272-9896	1716
	1718
272-9897	1716
	1718
273-0155	493
	500
	509
273-1182	971
273-1639	828
	▶829
273-1640	829
273-2128	1640
273-2130	1600
	1601
	▶1640
273-2598	311
273-2599	311
273-2999	204
273-3224	784
	791
	798
	805
273-3239	747
	752
	756
	763
273-5632	625
	628
	635
273-6469	669
274-1716	971
	974
274-1717	971
	974
274-1718	971
	974
274-1953	19
	20
	22
	▶73
274-2392	1752
	1771
274-3774	482
	520
	612
274-3775	518
274-3776	518
	520
274-3777	518
274-3778	518
274-3779	482
	511
	518
	520
274-3781	636
274-4491	124
	125
	127
	128
274-5643	684
	686
274-7395	412
	▶438
274-7396	412
	▶439
274-8359	115
274-8501	▶827
274-9189	1831
274-9991	184
275-0701	1160
275-0702	▶1160
	1172
	1174
	1176
275-1253	225
	227
	229
	▶461
275-5465	1962
	1969
275-5466	1972
	1974
275-5470	1985
	1987
275-5471	1985
	1987
275-5472	1985
	1987
275-5490	▶2041
275-5727	▶269
	950
275-5797	1614

▶ PRIMARY REFERENCE

PART NUMBER INDEX

Part	Page
275-5924	▶2010
275-5925	▶2011
275-5926	▶2012
275-5936	▶2034
275-5937	▶2035
275-5938	▶2036
275-5980	▶2013
275-6008	▶2014
275-6009	▶2015
275-6010	▶2016
275-6048	▶1999
275-7741	469
	▶470
	508
	518
275-7838	▶1444
275-7840	▶1444
275-7848	747
275-7850	766
276-0478	1422
	1423
276-3091	225
276-3104	227
	229
276-3462	▶844
276-3607	1405
276-3649	1470
	▶1650
276-3650	1650
	▶1651
276-4132	125
276-5317	121
	123
	124
	125
	127
	128
276-5726	1172
	1174
	1176
277-0467	▶335
	360
277-0468	▶336
	360
	361
277-3082	335
	336
	337
	338
278-1363	125
	126
278-1365	124
	130
278-1929	100
	105
	▶124
278-1938	104
	▶125
278-5657	31
278-5662	19
	22
	▶31
	▶32
278-6470	1578
	1582
	1586
278-7109	542
	548
	554
	560
	566
	575
278-8185	1972
	1974
278-8186	1965
	1972
	1974
278-8965	1720
278-8967	1720
278-8970	1720
278-8974	1720
278-8981	474
279-6102	1688
279-6103	1688
280-2166	13
	▶21
280-2167	21
	▶105
280-2691	1735
280-3979	65
280-4033	304
	▶541
280-4060	1979
	▶2017
280-4061	▶2018
280-4062	1992
	▶2019
280-4063	1992
	▶2020
280-4064	1992
	▶2021
280-4065	▶2022
280-4066	1992
	▶2023
280-4067	1992
	▶2024
280-4069	▶2025
280-6800	542
281-0680	▶2026
281-1640	▶65
	71
281-2725	271
	▶273
281-5972	770
281-6452	▶17
281-7060	17
	▶184
281-7062	184
281-7608	929
	932
281-8261	70
	73
282-3731	25
282-5042	812
282-9904	184
283-0130	1525
	1526
	1537
283-0136	747
283-0137	747
283-1137	▶1273
	1815
283-1603	1723
283-1604	▶1723
	1805
283-1721	252
	254
283-1850	▶1987
283-1851	▶1969
	1987
283-1937	1962
	1969
	1972
	1974
283-1938	1962
	1969
	1972
	1974
283-1940	▶1988
283-1941	▶1972
	1988
283-9815	361
	362
284-0001	1278
284-1570	897
284-1571	897
284-2327	▶3
284-2409	643
284-2735	▶2
	3
284-2987	3
	▶305
284-2990	304
	305
	▶597
284-2991	305
	▶308
284-2995	305
	▶312
284-2998	305
	▶628
284-3003	305
	▶647
	▶649
	▶651
284-3007	305
	▶608
284-3008	608
284-3010	▶283
	304
	305
284-3502	154
	170
	173
	176
284-3623	523
284-3757	▶345
	398
	400
284-4739	▶1847
284-5790	844
	845
284-8533	294
284-8954	▶1848
284-8955	▶1849
284-9055	1813
285-1133	302
285-1202	▶221
285-3564	628
285-3570	548
	554
	560
285-3575	▶290
285-3576	▶290
285-3602	585
	589
	592
	598
285-3606	647
	649
	651
285-5531	361
	362
285-5629	1538
285-6399	▶348
285-6400	▶346
285-7275	▶1092
	1152
	1155
285-7276	▶1096
	1152
285-7277	▶1100
	1153
	1155
285-7278	▶1105
	1153
285-7279	▶1109
	1154
285-7280	▶1113
	1154
	1156
285-7281	1152
	1155
	▶1676
285-7282	1153
	1155
	▶1677
285-7283	1154
	1156
	▶1678
285-7284	1092
	▶1239
285-7285	1096
	▶1241
285-7286	1042
	1100
285-7287	1105
	▶1242
285-7288	1113
	▶1243
285-7289	1109
	▶1244
285-7293	1092
	1096
	1118
285-7294	1092
	1096
285-7295	1092

▶ PRIMARY REFERENCE

PART NUMBER INDEX

Part	Page
	1096
285-7296	1100
	1105
	1122
285-7297	1100
	1105
285-7298	1100
	1105
285-7299	1109
	1113
	1126
285-7300	1109
	1113
285-7301	1109
	1113
285-7302	1056
	1092
285-7303	1239
	1241
	1242
	1243
	1244
	1245
	1257
	1258
	1259
285-7304	1100
	▶1245
285-7305	1239
	1245
285-7306	1229
	1230
285-7307	1084
	1131
285-7309	1074
	1113
285-7310	1092
	▶1247
285-7311	1092
	▶1249
285-7312	1100
	▶1250
285-7313	1100
	▶1252
	▶1253
285-7314	1113
	▶1254
285-7315	1113
	▶1255
285-8423	▶1885
	1887
285-8424	▶1887
	1889
285-8674	▶1333
	1443
	1444
286-0916	608
286-1092	290
	▶524
286-1094	548
	554
286-1755	1170
286-2110	2047
286-2118	2056
286-2119	2045
	2047
286-2486	939
	1170
286-3219	743
	747
	752
	823
286-7232	305
	▶655
286-7245	305
	▶670
286-7272	290
	▶525
286-7273	629
	635
286-7275	548
	554
	560
286-7276	629
	635
286-7925	347
	▶361
	▶362
286-9380	1907
	1908
287-3049	254
287-3585	712
287-3679	6
	8
	10
	11
	▶953
287-8013	▶844
287-8397	655
287-8402	▶1441
	1470
288-0568	1333
	▶1336
288-0569	1336
288-1023	603
288-1683	548
	554
	560
	566
	575
288-1744	▶1850
	▶1851
288-1772	▶477
	1152
	1153
	1154
	1155
	1156
288-1773	477
288-2518	480
288-4109	24
288-4881	65
288-4882	65
288-4883	59
	65
288-4884	59
	65
288-8250	▶1990
288-8251	▶1974
	1990
288-8350	▶1977
288-8390	▶440
	608
	612
	629
	636
	647
	649
	651
289-2217	309
289-8215	29
	30
	32
290-0106	524
290-0461	1375
290-2298	1316
290-2299	1316
290-2301	1317
290-2302	1317
290-2682	1174
	1176
290-2685	1174
	1176
290-2688	1174
	1176
290-2694	1160
290-3265	1481
	1488
	1495
290-4821	1350
290-4822	1350
290-4824	770
290-5780	▶1445
290-8160	337
	338
290-8996	337
	338
291-2165	508
	522
291-3012	1601
291-3013	1444
	▶1525
291-3014	1526
	1537
291-4392	693
	698
291-4397	693
	698
291-4398	693
291-4399	693
291-4400	693
291-5553	2066
291-5554	2066
291-5555	2066
291-5556	2066
291-5558	2066
291-5560	▶2066
	2088
291-5561	2066
291-6821	13
	15
	17
	▶152
291-8508	1595
	▶1609
292-1312	1350
292-3869	629
	636
292-4307	1388
	1391
292-6092	2
	▶1820
292-6097	1825
292-6107	1826
292-6110	▶1703
	1820
292-6402	▶1824
	1825
292-6890	▶1818
	1820
	1821
292-6893	1703
	1705
	▶1863
292-6895	1703
	1704
	▶1866
	▶1869
292-8121	1578
	1582
	▶1626
292-8123	1586
	▶1631
292-8134	305
	▶548
	▶554
292-9237	▶1825
	1882
292-9482	1977
292-9484	1977
292-9485	1977
292-9779	559
	568
	576
292-9782	152
292-9783	152
292-9911	747
	752
	823
292-9912	756
	763
	▶823
292-9966	752
	756
	763
292-9967	752
	756
	763
292-9968	752
	756
	763
293-2911	1854
293-5263	1395
293-5328	770
293-7303	▶1152
293-7304	▶1152
293-7305	▶1153
293-7306	▶1153
293-7307	▶1154
293-7308	▶1154

▶ PRIMARY REFERENCE

PART NUMBER INDEX

Part	Page
293-7309	1152
	1155
	▶1670
293-7310	1153
	1155
	▶1672
293-9130	510
294-0058	1483
	1490
	1497
294-0321	1294
	1302
	1312
294-1072	548
	554
294-1153	1354
	1359
294-1154	1354
	1359
294-1155	1354
294-1156	1354
294-2251	566
294-2318	279
	283
	287
294-2319	279
	280
	284
	287
	482
294-3075	25
294-3076	25
294-5042	1882
	1885
294-9162	▶845
295-1145	682
	686
	▶885
295-1146	885
295-1299	548
	554
	560
	566
	575
295-1300	559
	567
	575
296-5662	1366
	▶1395
296-5725	1591
	1596
296-6055	348
	▶391
296-7575	1813
	1815
296-7632	217
	▶219
296-7759	330
	335
	336
296-7786	1444
	▶1526
296-8073	▶616
296-8263	1527
	1529
296-8265	▶1527
	1682
	1683
296-8266	1527
	1529
296-8268	▶1529
	1684
	1685
296-8269	1527
296-8270	1529
296-8271	▶1531
	1682
	1684
296-8272	▶1533
	1683
	1685
296-8275	1533
296-8276	1531
	1533
	1535
296-8281	1531
296-8282	1531
297-0831	947
297-1398	1805
297-1813	39
297-2873	170
	173
297-3207	22
297-4902	395
	397
	398
297-6919	1509
	1511
	1513
297-6920	1509
	1511
	1513
297-6921	1509
	1511
	1513
297-6922	1509
297-6924	1443
	▶1509
	▶1511
298-2038	3
	▶1443
298-2497	1452
	1455
298-2498	1452
	1455
	1458
	1460
298-2500	▶1578
	▶1582
	1682
	1684
298-2501	▶1586
	1683
	1685
298-2502	▶1452
	1683
298-2503	▶1455
	1685
298-2518	510
298-2534	510
298-6962	▶1682
298-6963	▶1683
298-6964	▶1684
298-6965	▶1685
299-1893	264
299-2277	1826
299-4132	950
299-4134	950
299-4136	950
299-4793	1670
299-4794	1670
299-4797	1672
299-4798	1672
299-5838	▶1354
	1443
299-5845	278
299-6993	1405
299-7326	14
	16
	▶403
299-7327	17
	▶404
299-9482	978
	1463
299-9618	549
	554
	560
	567
	575
3	
300-2780	▶1703
300-3617	309
300-3618	309
300-3639	308
300-3640	308
300-5844	290
	▶1736
	▶1738
301-0038	1807
301-0104	698
301-0105	698
301-0106	698
301-0412	1805
301-0589	294
301-2979	666
301-3018	▶51
	55
301-4162	▶1826
	1885
301-4549	1863
	1872
	1875
301-4599	1376
	▶1388
301-4602	1338
	1342
	▶1391
301-4617	1866
	1869
301-4899	▶1763
301-5154	1890
	1894
301-5352	▶126
	131
301-7980	974
301-7981	974
301-8685	284
	287
301-9554	284
	287
302-1410	219
302-2177	6
	10
	▶662
302-5668	▶427
302-8170	6
	7
	8
	9
	10
	11
	▶264
303-6325	▶845
303-6328	845
303-8126	1736
	1738
303-8246	662
303-8303	8
	11
	▶663
304-0355	663
304-2740	1785
304-4173	1763
	1813
	1815
304-4212	▶1813
304-4540	1525
	1526
	1537
304-5267	1165
304-5270	18
	▶1165
304-5687	303
304-5691	1807
304-5755	1174
	1176
304-7223	1519
	1521
304-7224	1523
304-7225	1515
304-7226	1515
	1523
304-7716	1354
	1359
304-8401	862
304-8652	511
	521
304-8704	838
304-8946	▶977
	1410
304-9540	1566
	1569
304-9553	25
305-3684	242
	246
305-5522	511
	522

▶ PRIMARY REFERENCE

PART NUMBER INDEX

Part	Page
305-9196	55
	57
	▶118
305-9882	559
305-9883	559
306-0350	568
	576
306-0351	568
	576
306-3998	444
306-4214	7
	9
	▶405
306-8156	447
	448
306-8927	▶845
306-9526	1263
307-0047	325
307-1610	30
307-2338	520
307-2673	119
307-3245	1237
	1238
	1239
	1245
	1247
	1249
	1250
	1253
	1254
	1255
	1260
	1262
	1263
307-4671	518
	1718
	▶1720
307-6457	1388
	1391
307-6458	1388
	1391
307-7603	1274
307-8322	124
	129
	131
307-9901	950
308-2613	1555
308-2708	1702
	1705
	▶1872
	▶1875
308-2709	672
308-2710	▶559
	1733
308-2711	559
308-2712	▶1749
	1872
308-2713	7
	9
	▶308
308-2714	1285
	▶1324
308-2715	6
	7
	8
	9
	10
	11
	▶996
308-2716	1324
308-2718	6
	7
	8
	9
	10
	11
	▶963
308-2720	6
	7
	8
	9
	10
	11
	▶897
308-2722	▶667
	1285
308-2723	667
308-2724	6
	7
	8
	9
	10
	11
	▶1285
308-2725	6
	7
	8
	9
	10
	11
	▶1820
308-2726	▶1819
	1820
308-2727	▶1704
	1820
308-2729	6
	7
	8
	9
	10
	11
	▶950
308-3868	1732
308-3869	▶1732
	1807
308-4925	1595
308-6336	▶845
308-8466	996
308-8470	996
308-8496	897
308-9131	902
309-0972	3
	▶566
309-0973	325
	▶574
309-1059	▶2046
309-1065	▶2056
309-1066	▶2045
309-1119	2045
	2056
309-1129	▶2047
309-2710	567
	575
309-2714	612
309-2726	305
	▶529
309-2727	529
309-2740	363
309-2741	386
309-2748	386
309-4433	294
309-5053	1771
309-5130	402
309-5133	850
	856
309-8477	863
309-8768	▶672
	1704
310-3495	978
	▶1358
	1410
310-4307	481
310-4785	1285
310-5561	1358
310-5562	1358
310-5563	1358
310-5991	6
	7
	8
	9
	10
	11
	▶481
310-6493	1397
	1398
310-7198	1284
310-7218	1858
310-7584	1866
	1869
310-7585	1866
310-7612	35
310-7767	1318
310-7768	1318
310-7769	1318
310-7770	1318
310-8266	1704
	1855
	▶1858
310-8564	1369
310-8565	1369
310-8566	1369
310-8567	1369
310-9060	▶1992
310-9061	▶1979
	1992
310-9106	2003
310-9107	2003
310-9108	2003
310-9109	2003
310-9110	▶2003
310-9200	▶1980
311-2166	1292
311-2425	1304
	1312
311-3898	1878
311-7595	2075
	2078
	2081
	2084
311-7596	2075
	2078
	2081
	2084
311-7597	2075
	2078
	2081
	2084
311-7598	2075
	2078
	2081
	2084
311-7599	2075
	2078
311-7600	859
	▶2075
	▶2078
311-7601	859
	▶2081
	▶2084
311-7603	2075
	2078
	2081
	2084
311-7604	2075
	2078
	2081
	2084
311-7605	2075
	2078
	2081
	2084
311-7606	2075
	2078
	2081
	2084
311-7607	2075
	2078
	2081
	2084
311-7608	2075
	2078
	2081
	2084
312-4125	395
	397
	398
312-4790	1525
	1526
	1537
312-6374	1304
312-8629	1661
313-1284	1555
313-4573	1902

▶ PRIMARY REFERENCE

PART NUMBER INDEX

Part	Page
313-5104	1342
313-5472	▶913
	915
313-9198	760
313-9550	210
314-3063	59
314-3064	59
314-3065	59
314-3066	59
314-3067	59
314-3068	59
314-3069	59
314-3243	1555
314-3985	2090
314-3986	2089
314-4018	1706
314-5059	▶2027
314-5163	252
314-5164	17
	▶252
	▶254
314-5216	17
	▶227
	▶229
314-5274	1903
314-5275	1903
314-5580	791
314-5581	791
	798
	805
314-5582	791
	798
	805
314-6409	1980
314-6413	1980
314-6414	1980
314-7599	176
314-7642	1337
314-7644	1337
314-7938	1488
	1495
314-9582	922
314-9614	22
	▶35
315-0080	2004
315-0081	2004
315-0082	2004
315-0083	▶2004
315-0117	1927
315-0118	1927
315-0119	1927
315-2615	947
315-4945	977
315-5160	1395
315-6110	246
315-8420	1434
	1437
315-8752	1533
	1535
315-8755	▶1309
	1444
315-8759	1458
	1460
315-8761	1458
	1460
315-8791	1535
315-8805	1444
	▶1513
315-8809	1505
315-8810	▶1535
	1683
	1685
315-8814	1505
315-8815	▶1590
	1682
	1684
315-8825	▶1458
	1683
315-8830	▶1595
	1683
	1685
315-8836	760
315-8837	763
315-8840	▶1460
	1685
315-8852	1590
	1595
315-8854	1590
	1595
315-8857	1590
	1595
315-8858	1590
	1595
315-8859	1590
	1595
315-8861	1590
	1595
315-8862	1590
	1595
315-8863	1590
	1595
315-8864	1590
	1595
315-8866	1590
	1595
315-8867	1590
	1595
315-8868	1590
	1595
315-8869	1590
	1595
315-8871	1590
	1595
315-8872	1590
	1595
315-8873	1590
	1595
315-8874	1505
315-8930	703
	▶760
315-8994	1590
	1595
315-8999	1505
315-9142	1505
315-9159	1309
315-9161	1309
315-9162	1309
315-9174	760
315-9176	760
315-9202	1359
315-9203	1359
315-9211	760
315-9291	1505
315-9315	760
315-9319	763
315-9324	760
315-9326	1590
	1595
315-9425	1595
315-9426	1590
315-9484	1590
315-9485	1590
	1595
315-9970	922
315-9971	922
315-9972	1531
	1533
	1535
315-9973	1531
	1533
	1535
315-9974	1531
	1533
	1535
316-1438	1401
	1403
	1555
	1661
316-1835	1841
316-1927	1697
316-4312	1434
	1437
316-4382	791
	798
	805
316-5182	1531
	1533
	1535
316-6864	260
317-1109	597
317-2286	922
317-2288	922
317-2547	922
317-2767	17
	▶22
317-4456	▶2059
317-5833	1858
317-8012	612
317-8014	612
317-8766	47
317-9186	267
	269
318-2082	445
318-2925	1527
	1529
	▶1614
318-6048	597
319-0144	947
319-0785	88
	90
	▶132
319-2833	170
	173
319-3583	1752
319-6149	1771
319-6234	109
319-6688	1525
	1526
	1537
319-6940	1092
	1097
	1101
	1106
	1109
	1114
	1118
	1122
	1126
319-6951	1093
	1096
	1100
	1105
	1109
	1113
	1118
	1122
	1126
319-7006	589
	592
	598
319-7384	337
	338
319-7401	47
	▶133
320-2794	▶127
	131
320-2795	127
320-2796	▶128
	129
	131
320-2797	128
320-7454	947
321-0617	1519
321-0619	1573
	1578
321-0929	974
321-0932	974
321-5920	1771
321-5952	1771
321-5981	1452
	1455
	1458
	1460
321-6256	576
322-1126	52
322-1945	252
	254
322-2018	1555
322-2737	1525
322-2926	1525
	1537
322-3152	1445
	▶1537
322-3161	1824
322-3621	▶303
	568
	576
322-3793	▶1538
	1590
	1595

▶ PRIMARY REFERENCE

PART NUMBER INDEX

Part	Page
322-5504	848
	850
	▶867
322-5505	867
322-6478	947
323-1049	1263
323-1053	1134
323-3533	1167
323-3534	1167
323-3535	1167
323-3536	1167
323-3537	1167
323-3538	1167
323-3539	1167
323-3540	1167
323-3543	1841
323-3544	1841
323-3545	1751
323-3750	982
323-3752	982
323-3753	982
323-4071	848
	850
	853
	856
323-8451	▶52
	57
323-9531	878
	880
324-3641	267
	269
324-6804	114
325-0130	▶397
325-0132	▶1815
325-0195	▶1905
325-1551	670
325-7180	1705
	▶1894
325-7221	982
325-7222	982
325-7233	982
326-0254	1285
326-0632	978
326-0633	978
326-0634	978
326-0635	978
326-0636	978
326-1643	231
326-1831	978
326-1832	978
326-3071	1703
	1704
	1705
	▶1756
326-3073	1703
	1705
	▶1859
326-3092	1807
326-3191	1682
	1684
	▶1716
326-3193	1683
	1685
	▶1718
326-3198	1705
	▶1898
326-3205	1898
326-3803	1359
	▶1539
326-4234	254
	592
326-4287	309
326-4512	32
326-5212	1401
	1403
	1555
326-7291	▶1326
	1703
	1704
	1705
327-1154	529
	670
327-2109	1614
327-4309	902
327-4485	▶464
	1152
	1153
	1154
	1155
	1156
327-5450	1899
327-6917	▶1760
	1820
	1821
327-8026	▶340
	1339
	1343
327-9346	902
327-9347	902
328-2264	1812
328-2929	254
328-3051	892
328-3052	906
328-3055	895
328-3080	2
	▶899
328-4236	101
	▶129
328-4238	129
	▶130
328-4242	103
	▶131
329-0416	1526
329-4511	115
329-4997	1781
	1785
329-5778	739
329-8109	9
	10
	11
	▶978
329-8110	978
329-9287	531
329-9288	9
	10
	11
	▶531
329-9915	310
330-3409	306
330-3410	306
330-3495	1752
330-3715	156
330-4035	1281
330-4984	1771
330-5050	▶1812
	1919
330-5646	363
	386
330-7802	1820
	1821
331-0314	▶1695
	1703
	1704
	1705
331-0315	1695
	▶1790
331-5291	1846
	1851
	▶1852
331-6206	677
331-6210	677
331-9011	363
	387
332-2178	1614
332-2398	1262
332-2399	1262
	1263
332-2401	1260
332-2402	1260
332-2403	1260
332-2404	1260
332-6679	1800
332-6900	1800
332-7298	34
332-9402	▶337
	367
333-2014	899
	▶906
333-2427	▶287
	305
333-8153	1738
333-9673	982
333-9674	982
333-9675	982
333-9676	982
333-9677	982
333-9678	982
333-9679	982
333-9680	982
333-9683	982
333-9684	982
333-9685	982
333-9686	982
333-9687	982
333-9688	982
333-9967	1160
334-0895	1604
	1609
334-4603	2088
334-5410	▶343
	378
	387
334-6832	95
334-6836	717
334-8328	1907
	1908
334-8329	1907
	1908
334-8332	1604
	1609
	▶1652
335-1304	568
	576
335-1893	109
	▶111
335-5218	1582
335-6693	1118
335-6694	1118
335-6695	1122
335-6696	1122
335-6697	1126
335-6698	1126
336-2311	▶2039
336-3566	1853
336-3655	1285
336-3656	1285
336-4317	568
	576
336-7235	327
	328
336-7877	2005
336-7878	2005
336-7879	2005
336-7880	2005
336-7881	2005
336-9313	867
336-9318	860
	867
336-9437	919
336-9438	919
336-9440	982
336-9442	982
337-0870	3
	▶305
337-0950	▶2005
337-3452	▶2006
337-3453	2006
337-3454	2006
337-3455	2006
337-5191	363
	387
337-5269	▶722
	723
337-5270	722
	723
338-0915	1563
338-1105	1556
338-2051	832
	▶836
338-2116	836
338-3453	449
338-3454	448
	▶449
338-8544	999
339-0313	926
	1662
	1663
339-0314	1662
	1663
339-4361	1439

▶ PRIMARY REFERENCE

PART NUMBER INDEX

Part	Page
	1441
339-4477	1734
339-8271	305
	▶598
339-8272	598
339-8790	840
340-1119	305
	▶482
340-1120	482
340-6776	1178
340-6777	1180
340-6779	1257
	1258
	1259
340-6919	1183
	1197
	1230
340-6920	1197
340-6921	1197
341-1652	1183
341-1653	1183
341-1654	1230
341-6644	723
341-6804	42
	▶46
341-8964	13
	15
	17
	▶95
342-1185	▶1118
	1152
342-1186	▶1122
	1153
342-1187	▶1126
	1154
342-1188	1118
	▶1257
342-1189	1122
	▶1258
342-1190	1126
	▶1259
342-5983	1511
342-5985	1419
342-5986	1415
343-1820	176
343-2263	1513
343-3145	1869
	1875
343-3146	1802
	▶1807
343-3147	1807
343-5430	999
343-5527	231
343-6501	523
343-6813	1688
343-8115	77
343-8121	77
343-9866	32
345-0509	636
345-0510	305
	▶635
345-0516	▶325
345-0519	348
	▶363
345-0520	305
	▶612
345-0521	612
345-0522	346
	347
	348
	▶365
345-0523	346
	347
	▶386
345-0527	305
	▶308
345-0529	305
	▶312
345-0530	305
	▶309
345-0533	▶1802
345-0534	▶309
	1802
345-0535	▶309
345-0536	▶310
345-2259	312
345-2260	312
345-3928	1470
345-3929	1470
345-3930	3
	▶1444
345-3931	1444
	▶1505
345-3932	1444
	▶1470
345-3933	1444
	▶1545
345-3934	▶1311
	1444
345-3935	▶1437
	1444
345-3936	▶805
	1444
345-3943	▶1359
	1444
345-3951	1470
345-3952	1312
345-3953	763
345-3954	763
345-3956	1470
345-3958	1470
345-3959	1470
345-3960	703
	▶763
345-3964	805
345-3967	1505
345-3969	1470
345-3981	1471
345-4455	518
345-4456	520
345-4457	520
345-4460	▶518
	1705
346-3822	2
	▶1821
346-3826	▶1705
	1821
346-3830	▶464
	859
346-3833	347
	▶367
346-3838	346
	348
	▶368
346-3840	346
	347
	348
	▶369
346-3842	▶1766
346-3843	▶1767
346-3850	1705
	▶1800
346-5571	▶723
	805
346-5572	723
346-6095	1545
	▶1555
347-0382	308
347-0385	312
347-0404	309
347-1738	850
	856
347-4165	176
347-4755	805
347-4784	1785
347-7102	1807
347-7407	722
347-9427	▶338
	362
	367
348-5952	308
348-5953	308
348-7743	101
348-8181	1894
349-1178	637
349-2530	523
349-2533	523
349-3904	885
349-4476	1134
349-4477	1134
349-4479	1134
349-4484	4
	▶1155
349-4485	4
	▶1155
349-4486	▶1156
349-4487	▶1131
	1155
	1156
349-4488	▶1134
	1155
	1156
349-4489	1134
349-4491	1134
349-4492	1131
	▶1260
349-4493	1131
349-4494	1131
349-4495	1131
349-4496	1131
349-4497	1131
349-4499	1134
	▶1262
349-4500	1134
	▶1263
349-4506	1131
349-4507	▶959
	1155
	1156
349-4508	▶964
	1155
	1156
349-4511	1230
349-6239	176
349-6242	176
349-7701	1766
349-7704	1767
349-8642	1767
350-9957	▶398
350-9958	▶400
350-9959	522
350-9960	346
	347
	▶467
350-9961	▶459
	1802
351-1901	1800
351-5778	805
351-6537	176
351-6538	176
351-9049	176
351-9918	327
351-9958	1875
351-9959	1875
351-9960	1869
351-9961	1869
351-9962	1869
351-9963	1875
352-3790	176
352-3791	176
352-3792	176
352-3793	176
352-5457	192
352-5477	192
	196
352-7837	196
352-8266	▶3
352-8271	▶4
352-8272	▶4
352-8273	▶4
352-8274	▶4
352-8275	▶5
352-8276	▶5
352-8277	▶5
353-1634	1767
353-4515	666
353-5125	119
353-5126	119
354-7387	▶1889
356-3417	▶1705

▶ PRIMARY REFERENCE

MEMORANDA

© 2010 CATERPILLAR
ALL RIGHTS
RESERVED

CAT, CATERPILLAR, THEIR RESPECTIVE LOGOS, “CATERPILLAR YELLOW” AND THE POWER EDGE TRADE DRESS, AS WELL AS CORPORATE AND PRODUCT IDENTITY USED HEREIN, ARE TRADEMARKS OF CATERPILLAR AND MAY NOT BE USED WITHOUT PERMISSION.

PRINTED IN
U.S.A.

SEBP3906-33
VOLUME III
Pages 1397-2094

988H Wheel Loader

BXY1-Up