CATERPILLAR®

UENR1735
June 2011

Schematic

735B and 740B Articulated Truck
740B Ejector Articulated Truck
Electrical System

735B:	740B:	740B EJ:
L4D1-UP	L4E1-UP	L4F1-UP
T4P1-UP	T4R1-UP	T4S1-UP

Volume 1 of 2: Chassis

© 2011 Caterpillar, All Rights Reserved

Printed in U.S.A.

UENR1735 VOL 1 of 2

42 Page, (Dimensions: 56 inches x 35 inches)

Component Location

Component	Schematic Location	Machine Location
Actuator - ARD Air Flow Control	C-3	1
Actuator - ARD Fuel Pressure #1 Cont	C-2	2
Actuator - ARD Fuel Pressure #2 Cont	E-2	3
Alarm - Backup	K-18	4
Alternator (L4D, L4E, L4F)	I-5	5
Battery A	I-4	6
Battery B	I-4	7
Breaker - Alternator (L4D, L4E, L4F)	J-4	8
Breaker - Engine ECM	J-4	9
Breaker - Engine ECM	J-4	10
Breaker - Main	J-4	11
Breaker - Main 2	J-4	12
Bus Bar	I-4	13
Camera	J-18	14
Camera	L-17	15
Coil - ARD Ignition Klumer Primary	B-2	16
Compressor - A/C Clutch Coil	H-1	17
Control - Air Cooled (T4P, T4R, T4S)	L-13	18
Control - Air Cooled (L4D, L4E, L4F)	F-12	19
Control - CCEM Fan	D-4	20
Controller - ARD Air Flow	D-2	21
Ground - Cab	H-5	22
Ground - Engine Block	H-5	23
Ground - Frame	H-5	24
Ground - Frame 1	K-8	25
Ground - Frame 2	H-6	26
Ground - Steer Motor	I-6	27
Heater - ARD Fuel Nozzle	B-4	28
Horn - High Tone	D-3	29
Horn - Low Tone	D-3	30
Injector 1 (T4P, T4R, T4S)	I-8	31
Injector 1 (L4D, L4E, L4F)	F-8	32
Injector 2 (T4P, T4R, T4S)	I-8	33
Injector 2 (L4D, L4E, L4F)	F-8	34
Injector 3 (T4P, T4R, T4S)	I-8	35
Injector 3 (L4D, L4E, L4F)	F-8	36
Injector 4 (T4P, T4R, T4S)	H-8	37
Injector 4 (L4D, L4E, L4F)	F-8	38
Injector 5 (T4P, T4R, T4S)	H-8	39
Injector 5 (L4D, L4E, L4F)	F-8	40
Injector 6 (T4P, T4R, T4S)	H-8	41
Module - Aftertreatment #1 ID	C-2	43
Motor - Electric Fuel Pump (L4D, L4E, L4F)	D-1	44
Motor - Hood Actuator	H-4	45
Motor - Second Steering	I-6	46
Motor - Starter	I-5	47
Pump - Autolube	E-5	48
Receptical - Remote Start	H-4	49
Relay - ARD Fuel Nozzle Heater	A-2	50
Relay - Secondary Steer	I-4	51
Relay - Start	I-5	52
Resistor - CAN A	A-4	53
Resistor - CAN A (L4D, L4E, L4F)	E-4	54
Resistor - CAN B	A-10	55
Sender - Fuel Level (T4P, T4R, T4S)	K-4	56
Sender - Fuel Level	K-4	57
Sensor - Accelerometer	A-15	58
Sensor - Aftermeat Gas DPF In	C-2	59
Sensor - Aftertreatment #1 Gas Temp	C-2	60
Sensor - Aftertreatment 1 Soc Oil Pressure	E-2	61
Sensor - Air Filter Restr Diff Pressure	I-6	62
Sensor - Air Filter Restr Diff Pressure (L4D, L4E, L4F)	C-1	63
Sensor - Air Inlet Temp Filter	J-6	64
Sensor - Air Inlet Temp Filter (L4D, L4E, L4F)	H-1	65
Sensor - ARD Fuel Pressure #1 (PIN2)	C-2	66
Sensor - ARD Fuel Pressure #2 (Main)	E-2	67
Sensor - ATAAC Fan Speed	G-7	68
Sensor - Barometric Pressure (T4P, T4R, T4S)	E-10	69
Sensor - Barometric Pressure (L4D, L4E, L4F)	E-10	70
Sensor - Body Tilt	L-16	71
Sensor - Coolant Temp #1 Out (T4P, T4R, T4S)	I-10	72
Sensor - Coolant Temp (T4P, T4R, T4S)	G-8	73
Sensor - Coolant Temp (L4D, L4E, L4F)	E-10	74
Sensor - Cooling Fan Speed	A-17	75
Sensor - Crankcase Pressure	I-10	76
Sensor - DPF #1 Intake Temp	C-2	77
Sensor - DPF Delta P	A-2	78
Sensor - DPF Intake Pressure #1	A-2	79
Sensor - Engine Oil Pressure (T4P, T4R, T4S)	H-11	80
Sensor - Engine Oil Pressure (L4D, L4E, L4F)	D-10	81
Sensor - Engine Speed	G-16	82
Sensor - Engine Speed #1 (Crank) (T4P, T4R, T4S)	H-11	83
Sensor - Engine Speed #1 (Crank) (L4D, L4E, L4F)	E-10	84
Sensor - Engine Speed (Cam) (T4P, T4R, T4S)	G-11	85
Sensor - Engine Speed #2 (Cam) (L4D, L4E, L4F)	E-2	86
Sensor - Engine Speed (T4P, T4R, T4S)	H-11	87
Sensor - Engine Speed (L4D, L4E, L4F)	E-10	88
Sensor - Fan Speed	G-7	89
Sensor - Fan Speed (T4P, T4R, T4S)	G-11	90
Sensor - Fan Speed (L4D, L4E, L4F)	E-4	91
Sensor - Fuel Pressure	I-10	92
Sensor - Fuel Pressure (T4P, T4R, T4S)	G-11	93
Sensor - Fuel Pressure (L4D, L4E, L4F)	E-10	94
Sensor - Fuel Temp (T4P, T4R, T4S)	G-10	95
Sensor - Fuel Temp (L4D, L4E, L4F)	E-10	96
Sensor - Ground Speed #2 (Cam) (T4P, T4R, T4S)	G-11	97
Sensor - Ground Speed #2 (Cam) (L4D, L4E, L4F)	E-2	98
Sensor - Ground Speed (T4P, T4R, T4S)	G-11	99
Sensor - Ground Speed (L4D, L4E, L4F)	F-10	100
Sensor - Front Right Hand Wheel Speed	C-17	87
Sensor - Fuel Pressure After Filter (T4P, T4R, T4S)	G-10	89
Sensor - Fuel Pressure After Filter (L4D, L4E, L4F)	D-9	90
Sensor - Fuel Temp (T4P, T4R, T4S)	G-10	91
Sensor - Fuel Temp (L4D, L4E, L4F)	D-9	92
Sensor - Hydraulic Oil Temp	D-10	93
Sensor - ARD ADD Pressure	B-16	94
Sensor - Intake Manifold Pressure (IMP) (T4P, T4R, T4S)	H-11	95
Sensor - Intake Manifold Pressure (L4D, L4E, L4F)	E-10	96
Sensor - Intake Manifold Temp (L4D, L4E, L4F)	E-10	97
Sensor - Intermediate Speed	G-16	98
Sensor - Line Oil Pressure	A-17	99
Sensor - Mid Left Hand Wheel Speed	F-16	100
Sensor - Mid Right Hand Wheel Speed	F-18	101
Sensor - NRS Differential Pressure (T4P, T4R, T4S)	H-11	102
Sensor - NRS Intake Pressure (T4P, T4R, T4S)	H-11	103
Sensor - NRS Temp (T4P, T4R, T4S)	J-10	104
Sensor - OTO Oil Temp	B-16	105
Sensor - Parking Brake Pressure	H-16	106
Sensor - Parking Brake Pressure 2	K-17	107
Sensor - Rear Left Hand Wheel Speed	F-18	108
Sensor - Rear Right Hand Wheel Speed	F-18	109
Sensor - Steering Oil Temp	D-5	110
Sensor - Steering Oil Temp	K-4	111
Sensor - TC Oil Temp	C-6	112
Sensor - Transmission Oil Temp	H-16	113
Sensor - Transmission Out Speed A	H-16	114
Sensor - Transmission Out Speed B	H-16	115
Sensor - Transmission TIC Output Speed	F-17	116
Solenoid - ATAAC Demand Fan	H-7	117
Solenoid - Demand Fan 1	A-16	118
Solenoid - Electric Fuel Pump	I-8	119
Solenoid - Front XAD	A-15	120
Solenoid - Fuel Prime	I-8	121
Solenoid - IAD Lock	B-16	122
Solenoid - IAD Lock ACC Charge	B-16	123
Solenoid - Lock Up Clutch	G-16	124
Solenoid - Mid XAD 1	A-16	125
Solenoid - Mid XAD 2	J-17	126
Solenoid - NRS Flow Bal Valve Actuator Up (T4P, T4R, T4S)	I-11	127
Solenoid - NRS Valve Actuator (T4P, T4R, T4S)	J-10	128
Solenoid - Parking Brake	G-16	129
Solenoid - Parking Brake 1	K-17	130
Solenoid - Rear XAD	G-16	131
Solenoid - Rear XAD 1	K-17	132
Solenoid - Start Aid	I-8	133
Solenoid - Start Aid (L4D, L4E, L4F)	C-1	134
Solenoid - Transmission Clutch 1	G-16	135
Solenoid - Transmission Clutch 2	G-16	136
Solenoid - Transmission Clutch 3	G-16	137
Solenoid - Transmission Clutch 4	G-16	138
Solenoid - Transmission Clutch 5	G-16	139
Solenoid - Transmission Clutch 6	G-16	140
Solenoid - Transmission Clutch 7	G-16	141
Solenoid - Lower Valve	H-16	142
Solenoid - Raise Valve	H-16	143
Spare Plug	B-2	144
Suppressor - Arc 1	I-3	145
Suppressor - Secondary Steering	J-4	146
Switch - A/C Pressure 1	H-1	147
Switch - Auto Lube	G-16	148
Switch - Auto Lube 1	K-17	149
Switch - Disconnect	H-4	150
Switch - Elevated Engine Idle	J-8	151
Switch - Engine Shutdown	K-5	152
Switch - Front Brake Temp	B-17	153
Switch - Hydraulic Tank Filter Bypass	L-4	154
Switch - Manual Fuel Prime	I-8	155
Switch - Neutralizer Relay (L4D, L4E, L4F)	C-1	156
Switch - OTO Filter Bypass	B-17	157
Switch - OTO Low Oil Pressure	A-17	158
Switch - Rear Brake Temp	G-16	159
Switch - Rear Brake Temp 1	K-17	160
Switch - Steering Pressure	K-4	161
Switch - Steering Tank Filter Bypass	H-4	162
Switch - Transmission Filter Bypass TH38	A-15	163
Valve - Brake 1/2 (T4P, T4R, T4S)	H-9	164
Valve - Brake 1/2 (L4D, L4E, L4F)	F-8	165
Valve - Brake 3/4 (T4P, T4R, T4S)	H-9	166
Valve - Brake 3/4 (L4D, L4E, L4F)	E-8	167
Valve - Brake 5/6 (T4P, T4R, T4S)	G-9	168
Valve - Brake 5/6 (L4D, L4E, L4F)	E-8	169

Off-Machine Switch Specification

Part No.	Function	Actuate	Deactivate	Contact Position
114-5333	AC High/Low Pressure	275 to 1760 kPa* (39.9 to 255.4 psi)	-	Normally Open*
227-6745	OTO Filter Bypass	293 ± 35 kPa (76 ± 35 kPa)	179 kPa Min	Normally Closed
253-2675	Hydraulic Tank Filter Bypass	148 ± 28 kPa (39 ± 28 kPa)	69 kPa Min	Normally Closed
253-2673	Steering Tank Filter Bypass	148 ± 28 kPa (39 ± 28 kPa)	69 kPa Min	Normally Closed
313-5104	Steering Pressure	1200 kPa Max	700 ± 100 kPa	N/O & N/C, SPDT
341-5644	Transmission Filter Bypass TH38	448 ± 69 kPa (65 ± 8 psi)	-	Normally Closed
369-1497	OTO Low Oil Pressure	113 kPa Max	70 ± 20 kPa	Normally Open

* With increasing pressure the closed condition can be maintained up to 2650 kPa (405 psi), with decreasing pressure the closed condition can be maintained down to 170 kPa (25 psi).
* Contact position at the contacts of the harness connector.

Resistor, Sender and Solenoid Specifications

Part No.	Component Description		Resistance (Ohms)*
80-0958	Resistor	CAN A	120 ± 5%
		CAN A	
134-2545	Resistor	CAN A (L4D); Term (C15)	120 ± 10%
152-8340	Solenoid	Parking Brake	32.6 ± 1.6
152-8340	Solenoid	Parking Brake 1	32.6 ± 1.6
196-2403	Solenoid	Lower Valve	5 ± 0.5
192-6443	Solenoid	Raise Valve	5 ± 0.5
211-2092	Solenoid	ATAAC Demand Fan	Nominal: 7.75 ± 1 Minimum: 5.81 ± 0.5 Maximum: 12.68
209-1134	Solenoid	Start Aid	20
209-1135	Solenoid	Start Aid (L4EC)	20
244-3114	Solenoid	Lock Up Clutch	8.7 ± 0.4
244-3114	Solenoid	Transmission Clutch 1 - 7	8.7 ± 0.4
252-8322	Solenoid	Front XAD	8.7 ± 0.4
252-8322	Solenoid	Mid XAD	8.7 ± 0.4
252-8322	Solenoid	Rear XAD	8.7 ± 0.4
252-8323	Solenoid	Mid XAD 1	8.7 ± 0.4
252-8323	Solenoid	Rear XAD 1	8.7 ± 0.5
277-6863	Solenoid	IAD Lock ACC Charge	33.9
279-8630	Solenoid	Demand Fan 1	5
300-0056	Solenoid	Fuel Prime	31.1 ± 2.4
308-1267	Solenoid	IAD Lock	5 ± 0.5
330-3086	Sender	Fuel Level	Full: 239 - 269 Empty: 25-30
342-0636	Solenoid	NRS Valve Actuator (C15)	Nominal: 2.85 ± 0.2 Maximum: 4.73
344-6043	Solenoid	NRS Flow Bal Valve Actuator Up (C15)	225

* At room temperature unless otherwise noted.

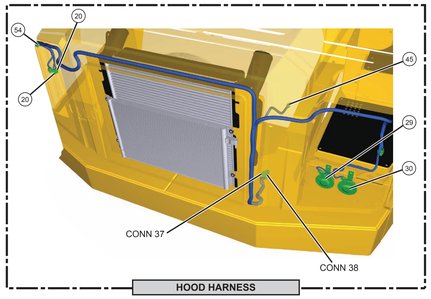
Connector Location	
Connector Number	Schematic Location
CONN 1	F-18
CONN 2	F-18
CONN 3	A-18
CONN 4	C-16
CONN 5	C-16/K-15
CONN 6	C-16
CONN 7	D-16/K-15
CONN 8	D-16
CONN 9	F-16
CONN 10	G-15
CONN 11	B-15
CONN 12	A-14
CONN 13	B-1&G-14
CONN 14	E-13
CONN 15	C-13
CONN 16	B-13
CONN 17	A-13
CONN 18	G-12/D-11
CONN 19	D-12/D-11/H-2
CONN 20	I-11/C-4
CONN 21	G-11
CONN 22	F-11/G-10
CONN 23	F-11/A-5

Connector Location	
Connector Number	Schematic Location
CONN 24	E-11
CONN 25	D-11
CONN 26	F-10
CONN 27	H-10
CONN 28	I-10
CONN 29	G-9
CONN 30	A-8
CONN 31	C-8
CONN 32	D-8
CONN 33	E-8
CONN 34	I-7/G-2
CONN 35	H-7
CONN 36	A-6
CONN 37	F-6
CONN 38	G-6
CONN 39	J-5
CONN 40	K-6
CONN 41	K-5
CONN 42	A-4
CONN 43	K-3
CONN 44	F-3
CONN 45	J-3

The connectors shown in this chart are for harness to harness connectors. Connectors that join a harness to a component are generally located at or near the component. See the Component Location Chart.

Related Electrical Service Manuals

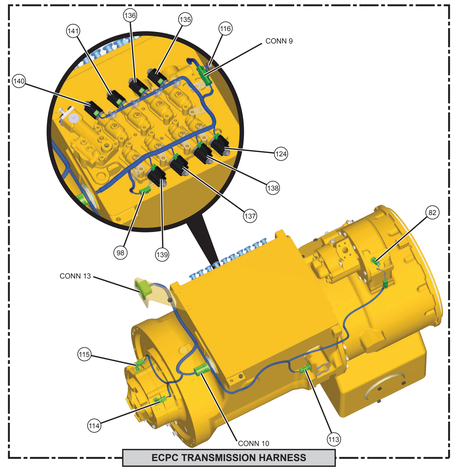
Title	Form Number
Alternator: 272-1889	SENR4130
Starting Motor: 338-3454	SENR3860
Chassis Control: 304-5687	UENR0206
Transmission Control: 304-5687	UENR1226
Communication Gateway Control: 327-6002	UENR1227



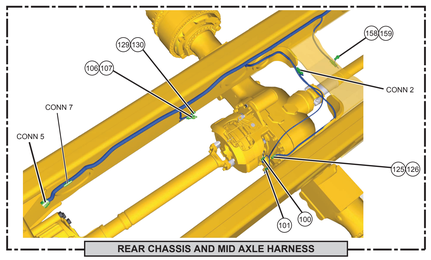
HOOD HARNESS



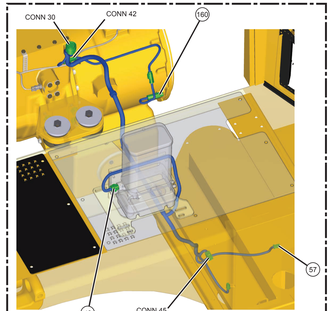
TRANSMISSION HARNESS



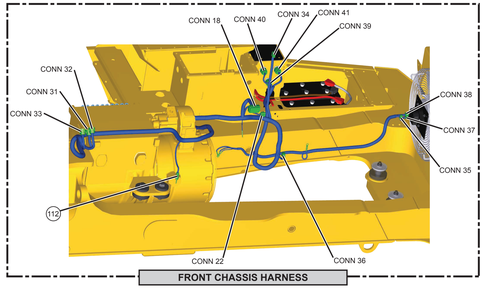
ECPC TRANSMISSION HARNESS



REAR CHASSIS AND MID AXLE HARNESS



FENDER HARNESS



FRONT CHASSIS HARNESS

Harness And Wire Electrical Schematic Symbols

Symbols

Pressure Symbol | Temperature Symbol | Level Symbol | Flow Symbol | Circuit Breaker Symbol

Symbols and Definitions

Fuse: A component in an electrical circuit that will open the circuit if too much current flows through it.

Switch (Normally Open): A switch that will close at a specified point (temp, press, etc.). The circle indicates that the component has screw terminals and a wire can be disconnected from it.

Switch (Normally Closed): A switch that will open at a specified point (temp, press, etc.). No circle indicates that the wire cannot be disconnected from the component.

Ground (Wired): This indicates that the component is connected to a grounded wire. The grounded wire is fastened to the machine.

Ground (Case): This indicates that the component does not have a wire connected to ground. It is grounded by being fastened to the machine.

Reed Switch: A switch whose contacts are controlled by a magnet. A magnet closes the contacts of a normally open reed switch; it opens the contacts of a normally closed reed switch.

Sender: A component that is used with a temperature or pressure gauge. The sender measures the temperature or pressure. Its resistance changes to give an indication to the gauge of the temperature or pressure.

Relay (Magnetic Switch): A relay is an electrical component that is activated by electricity. It has a coil that makes an electromagnet when current flows through it. The electromagnet can open or close the switch part of the relay.

Solenoid: A solenoid is an electrical component that is activated by electricity. It has a coil that makes an electromagnet when current flows through it. The electromagnet can open or close a valve or move a piece of metal that can do work.

Magnetic Latch Solenoid: A magnetic latch solenoid is an electrical component that is activated by electricity and held latched by a permanent magnet. It has two coils (latch and unlatch) that make electromagnet when current flows through them. It also has an internal switch that places the latch coil circuit open at the time the coil latches.

Harness and Wire Symbols

Wire, Cable, or Harness Identification Letters: Harness Identification Letters and Harness Connector Serialization Codes (see sample).

Harness Identification Letter(s): (A, B, C, ... AA, AB, AC, ...)

Harness Connector Serialization Code: (C1, C2, C3, ...) The connector serialization number indicates which connector in the harness (C1, C2, C3, ...).

AG-C4 111-7898 | L-C12 3E-5179 | L-C12 3E-5179

Part Number: for Connector Plug

Part Number: for Connector Receptacle

Plug | Receptacle | Pin or Socket Number

Deutsch connector: Typical representation of a Deutsch connector. The plug contains all sockets and the receptacle contains all pins.

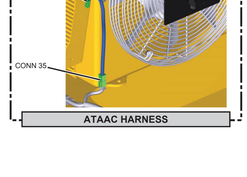
Sure-Seal connector: Typical representation of a Sure-Seal connector. The plug and receptacle contain both pins and sockets.

Fuse (5 Amps) | 9X-1123 | Component Part Number

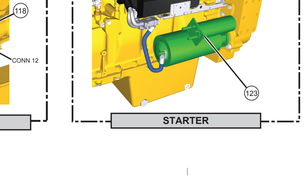
Harness identification code This example indicates wire group 325 wire 135 in harness "AG".

325-AG135 PK-14

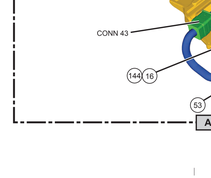
Wire Gauge | Wire Color



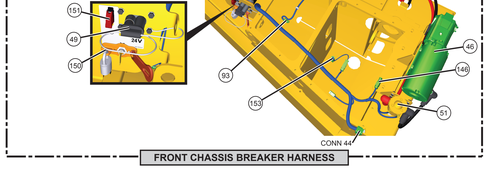
T4P, T4R, T4S ENGINE HARNESS



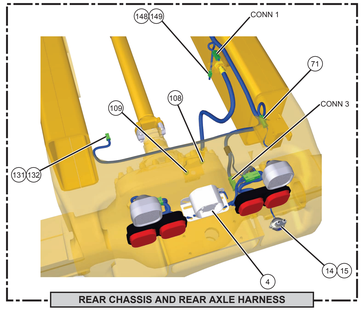
AIR CLEANER HARNESS (T4P, T4R, T4S)



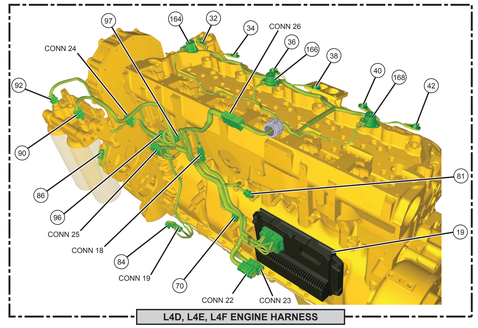
COOLANT JUMPER HARNESS (T4P, T4R, T4S)



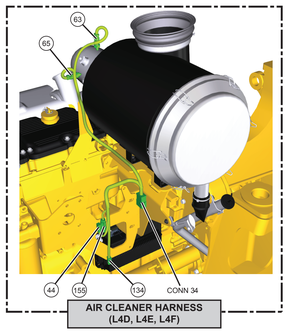
FRONT CHASSIS BREAKER HARNESS



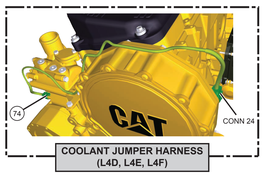
REAR CHASSIS AND REAR AXLE HARNESS



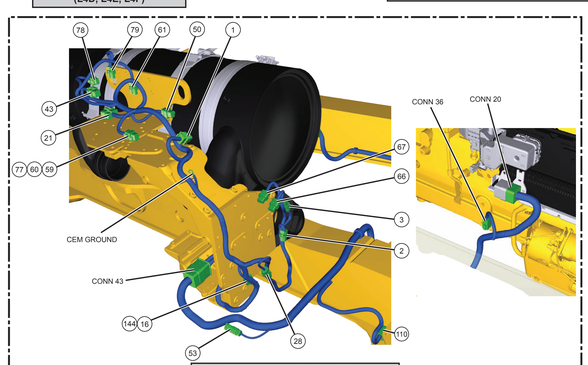
L4D, L4E, L4F ENGINE HARNESS



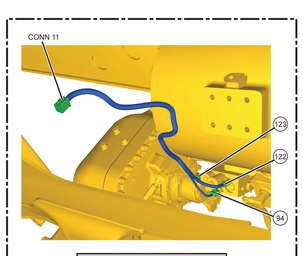
AIR CLEANER HARNESS (L4D, L4E, L4F)



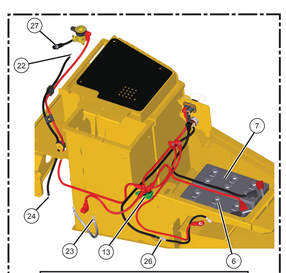
COOLANT JUMPER HARNESS (L4D, L4E, L4F)



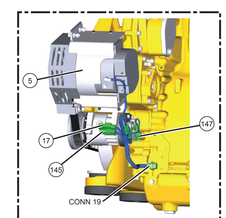
AFTERTREATMENT AND CEM HARNESS



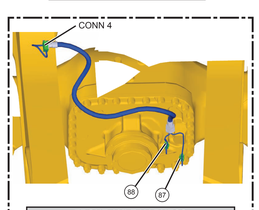
OTG HARNESS



GROUND HARNESSES

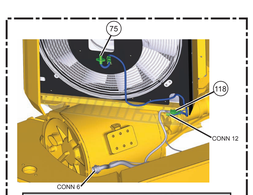


ALTERNATOR HARNESS



FRONT AXLE HARNESS

ATAAC HARNESS



MAIN FAN HARNESS

STARTER

UENR1735 VOL 1 of 2

42 Page, (Dimensions: 56 inches x 35 inches)

SYMBOL	DESCRIPTION
+	CIRCUIT CONNECTED
-	CIRCUIT NOT CONNECTED
⏚	ELECTRICAL CONNECTION TO MACHINE STRUCTURE
⏚	INTERNAL ELECTRICAL CONNECTION
CONN	CONNECTOR
CONN	CIRCUIT GROUPING DESIGNATION
- - -	ATCH WIRE, CABLE, COMPONENT
----	SPLICE
⊙	BLANK, SPADE, RING OR SCREW TERMINAL

ABBREV	COLOR
RD	RED
WH	WHITE
OR	ORANGE
YL	YELLOW
PK	PINK
BK	BLACK
GY	GRAY
PU	PURPLE
BR	BROWN
GN	GREEN
BU	BLUE

WIRE GROUP COLOR DESCRIPTIONS

- GROUND CIRCUIT
- WIRES THAT HAVE SYSTEM VOLTAGE WHEN THE KEY SWITCH IS OFF
- WIRES THAT HAVE SYSTEM VOLTAGE WHEN THE KEY SWITCH IS ON
- BATTERY POTENTIAL (+) CIRCUIT
- STARTING CIRCUIT
- START AID CIRCUIT
- TRANSMISSION CONTROL CIRCUIT
- ENGINE CONTROL CIRCUIT
- TURN SIGNAL/HAZARD WARNER CIRCUIT
- TURN SIGNAL WARNER WARNER CIRCUIT
- ECM - AIR COOLED EM
- CAT DATA LINK
- CAN DATA LINK A
- CAN DATA LINK B
- CHASSIS CONTROL CIRCUIT

OTHER COLOR DESCRIPTIONS

- HIGH MAX 5

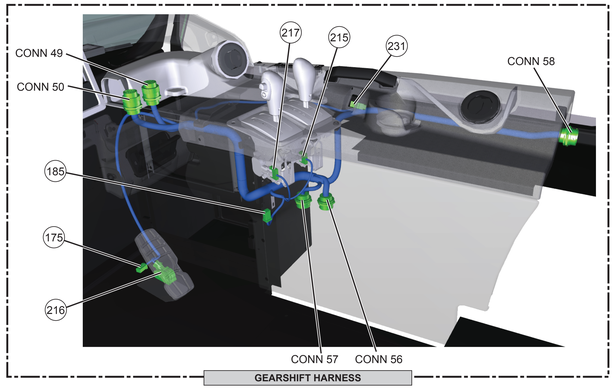
THIS DIAGRAM IS FOR THE 735B, 740B & 740BEJ ARTICULATED DUMP TRUCK WITH TIER IV ENGINE (C32 ADEM CHOSIS PAP765, PAP766, PAP767, PAM647 & PAM648 DESIGN CONTROL PAS5

COMPONENTS ARE SHOWN INSTALLED ON A FULLY OPERABLE MACHINE WITH THE ENGINE OFF, TRANSMISSION SHIFTER IN NEUTRAL AND PARKING BRAKE SET. UNLESS OTHERWISE NOTED. ALL SWITCHES ARE SHOWN WITH A "7" INTERMEDIATE DIGIT.

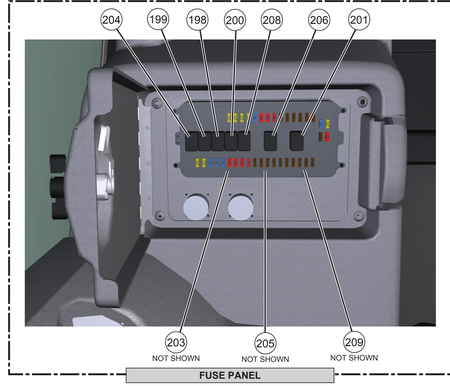
NOTE #1: NORMALLY OPEN BEYOND SECONDARY CHARGE NOTE #2: NORMALLY CLOSED BEYOND SECONDARY CHARGE NOTE #3: ELECTRICAL SCHEMATIC SPLIT SECTION (DETAILED FIT ONLY) ONE SIDE CAN BE CONNECTED TO 21 PIN OR 19 PIN CHASSIS END

A/C SYSTEM SCHEMATIC REFERENCE			
APPLICATION	PART NUMBER	SHEET LOCATION	
735B, 740B, 740BEJ	336-9004	PAGE 1	
735B, 740B, 740BEJ	336-9005	PAGE 2	
735B, 740B, 740BEJ	336-9006	PAGE 3	

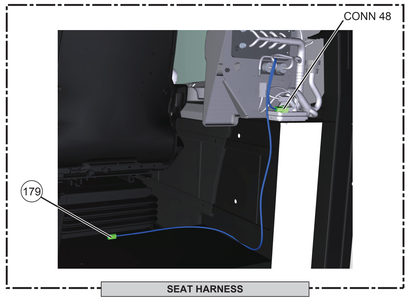
THIS SCHEMATIC IS FOR THE 735B, 740B AND 740B EJ ELECTRICAL SYSTEM
VOLUME 1 of 2: CHASSIS
MEDIA NUMBER: UENR1735
SCHEMATIC PART NUMBER: 330-9004, CHANGE: 00, VERSION: -
Components are shown installed on a fully operable machine with the key and engine off, transmission shifter in neutral and with parking brake set.
Refer to the appropriate Service Manual for Troubleshooting, Specifications and Systems Operations.



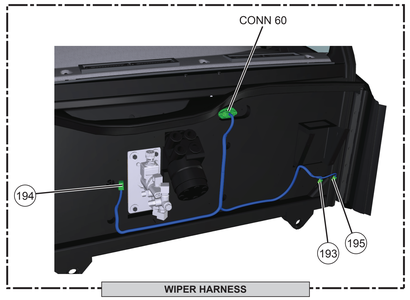
GEARSHIFT HARNESS



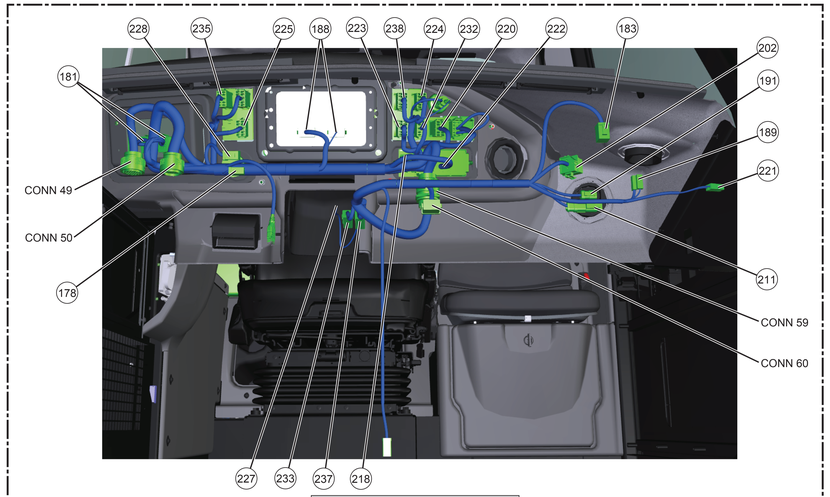
FUSE PANEL



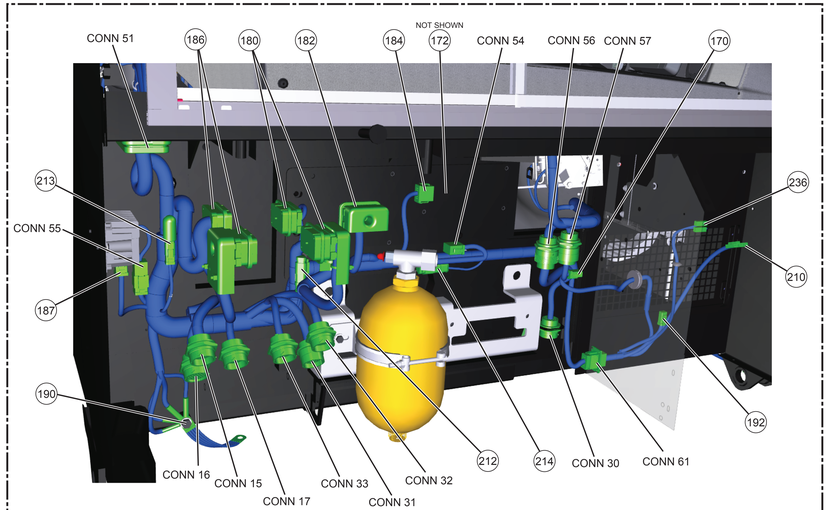
SEAT HARNESS



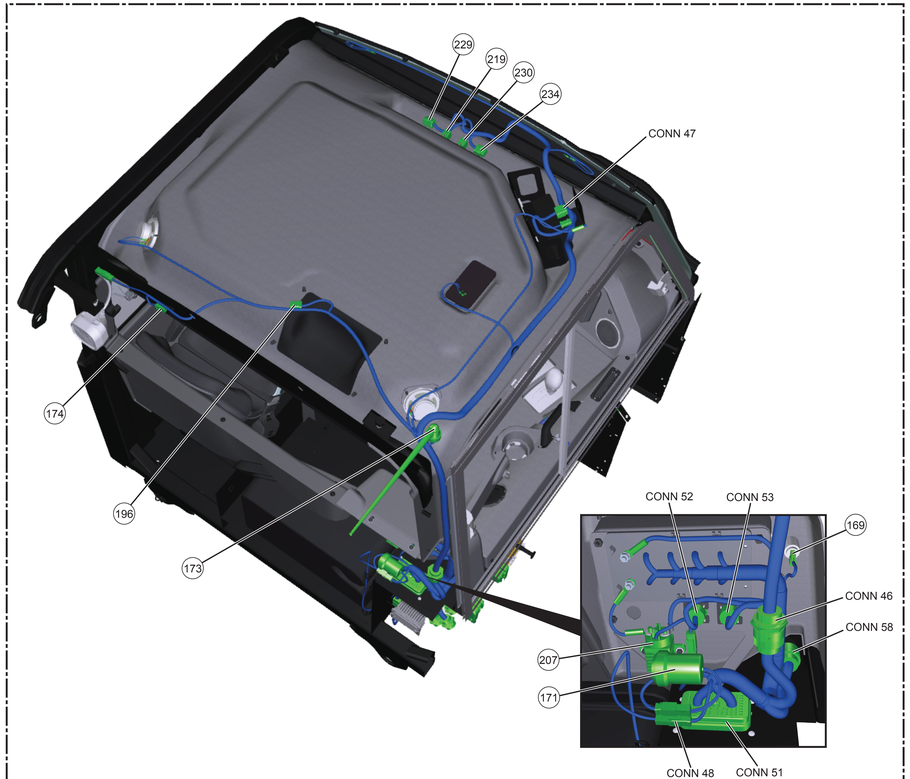
WIPER HARNESS



DASH AND BULKHEAD HARNESSES



MAIN CAB AND HVAC HARNESSES



ROOF AND FUSE HARNESSES

Component Location

Component	Schematic Location	Machine Location	Component	Schematic Location	Machine Location
12V Power Socket	J-15	169	Relay - Horn	J-12	204
Actuator - Water Valve	D-1	170	Relay - Int Second Steer	K-12	205
Alarm - Action	J-15	171	Relay - Int Wiper	K-12	206
Antenna	G-6	172	Relay - Main	I-12	207
Antenna - Radio	L-15	173	Relay - Second Steer	K-12	208
Beacon	J-18	174	Relay - Washer	K-12	209
Brake Pedal	E-11	175	Resistor	D-1	210
Camera - Rear Camera Cable	G-12	176	Resistor - CAN 2 Terminating A	B-7	211
Cigar Lighter	E-12	177	Resistor - CAN 2 Terminating B	F-6	212
Coil - MSS Exciter	B-12	178	Resistor - IAC Override	C-3	213
Compressor - Air Seat	J-15	179	Resistor - J1939 Datalink Terminating A	G-6	214
Control - Chassis ECU	L-5	180	Sensor - Hoist Control	F-11	215
Control - CMPD	G-12	181	Sensor - Throttle	G-11	216
Control - Communication Gateway	H-9	182	Sensor - Transmission Control	F-11	217
Control - Key Reader	B-5	183	Switch - Air Condition	H-15	218
Control - Product Link	H-6	184	Switch - CPS Force Regen	L-17	219
Control - Shift/Hoist Quad Lever	F-11	185	Switch - Dimmer	F-15	220
Control - Transmission/Chassis ECU	L-5	186	Switch - Dome Lamp	A-7	221
Converter 24V 12V	C-3	187	Switch - Fan Speed	E-12	222
Display - Indicator	F-12	188	Switch - Hazard	F-15	223
Flasher	A-7	189	Switch - Head Side Lamp	E-15	224
Ground - Cab	D-5	190	Switch - Heated Mirror	I-15	225
Module - Intermittent Wiper Delay	A-5	191	Switch - Hood	I-15	226
Motor - Blower	C-1	192	Switch - Horn	B-5	227
Motor - Front Washer	C-4	193	Switch - Key Start	A-12	228
Motor - Front Wiper	C-4	194	Switch - Left Hand Mirror	K-18	229
Motor - Rear Washer	C-4	195	Switch - Long Range Lamps	L-17	230
Motor - Rear Wiper	J-18	196	Switch - Park Brake	E-11	231
Radio	L-15	197	Switch - Rear Wiper	G-15	232
Relay - Backup Alarm	K-12	198	Switch - Retarder	A-5	233
Relay - Fuel Prime 1	J-12	199	Switch - Right Hand Mirror	L-18	234
Relay - Fuel Prime 2	K-12	200	Switch - Secondary Steer	G-15	235
Relay - Fuel Pump	L-12	201	Switch - Temperature	C-2	236
Relay - Headlamp	A-5	202	Switch - Wiper/Washer/Turn Signal	B-5	237
Relay - Heated Mirror	L-12	203	Switch - Worklamp	E-15	238

Machine locations are repeated for components located close together.

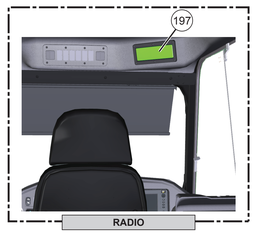
Connector Location

Connector Number	Schematic Location	Connector Number	Schematic Location
CONN 15	H-1	CONN 51	J-9
CONN 16	G-1	CONN 52	I-9
CONN 17	F-1	CONN 53	I-9
CONN 30	I-1	CONN 54	F-9
CONN 31	J-1	CONN 55	E-9
CONN 32	K-1	CONN 56	D-9
CONN 33	L-1	CONN 57	C-9
CONN 46	J-16	CONN 58	B-9
CONN 47	L-16	CONN 59	A-9
CONN 48	J-15	CONN 60	C-5
CONN 49	B-12	CONN 61	D-3
CONN 50	C-12		

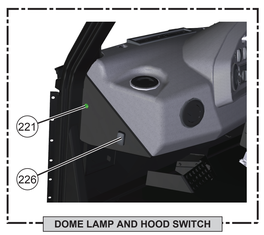
The connectors shown in this chart are for harness to harness connectors. Connectors that join a harness to a component are generally located at or near the component. See the Component Location Chart.



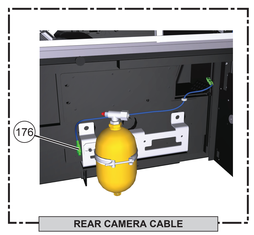
CIGAR LIGHTER



RADIO



DOME LAMP AND HOOD SWITCH



REAR CAMERA CABLE

CATERPILLAR®

UENR1735
June 2011

Schematic

735B and 740B Articulated Truck
740B Ejector Articulated Truck
Electrical System

735B: L4D1-UP, T4P1-UP
740B: L4E1-UP, T4R1-UP
740B EJ: L4F1-UP, T4S1-UP

Volume 2 of 2: Cab

© 2011 Caterpillar, All Rights Reserved

Printed in U.S.A.

UENR1735 VOL 2 of 2
42 Page, (Dimensions: 56 inches x 35 inches)

Harness And Wire Electrical Schematic Symbols

Symbols

Pressure Symbol | Temperature Symbol | Level Symbol | Flow Symbol | Circuit Breaker Symbol

Symbols and Definitions

Fuse: A component in an electrical circuit that will open the circuit if too much current flows through it.

Switch (Normally Open): A switch that will close at a specified point (temp, press, etc.). The circle indicates that the component has screw terminals and a wire can be disconnected from it.

Switch (Normally Closed): A switch that will open at a specified point (temp, press, etc.). No circle indicates that the wire cannot be disconnected from the component.

Ground (Wired): This indicates that the component is connected to a grounded wire. The grounded wire is fastened to the machine.

Ground (Case): This indicates that the component does not have a wire connected to ground. It is grounded by being fastened to the machine.

Reed Switch: A switch whose contacts are controlled by a magnet. A magnet closes the contacts of a normally open reed switch. It opens the contacts of a normally closed reed switch.

Sender: A component that is used with a temperature or pressure gauge. The sender measures the temperature or pressure. Its resistance changes to give an indication to the gauge of the temperature or pressure.

Relay (Magnetic Switch): A relay is an electrical component that is activated by electricity. It has a coil that makes an electromagnet when current flows through it. The electromagnet can open or close the switch part of the relay.

Solenoid: A solenoid is an electrical component that is activated by electricity. It has a coil that makes an electromagnet when current flows through it. The electromagnet can open or close a valve or move a piece of metal that can do work.

Magnetic Latch Solenoid: A magnetic latch solenoid is an electrical component that is activated by electricity and held latched by a permanent magnet. It has two coils (latch and unlatch) that make electromagnet when current flows through them. It also has an internal switch that places the latch coil circuit open at the time the coil latches.

Harness and Wire Symbols

Wire, Cable, or Harness Assembly Identification: Includes Harness Identification Letters and Wire Gauge and Wire Serialization Codes (see sample).

Harness Identification Letter(s): (A, B, C, ... AA, AB, AC, ...)

Harness Connector Serialization Code: The "C" stands for "Connector" and the number indicates which connector in the harness (C1, C2, C3, ...).

Part Number: for Connector Plug → AG-G4 111-7886 | L-C12 3E-5179 | L-C12 3E-5179 ← **Part Number:** for Connector Receptacle

Plug | **Receptacle**
Pin or Socket Number

Deutsch connector: Typical representation of a Deutsch connector. The plug contains all sockets and the receptacle contains all pins.

Fuse (5 Amps) — 5A — SX-5123 ← Component Part Number

Sure-Seal connector: Typical representation of a Sure-Seal connector. The plug and receptacle contain both pins and sockets.

Harness Identification code: This example indicates wire 325 in harness "AG".

325-AG13S PK-14 ← **Wire Gauge** / **Wire Color**

UENR1735 VOL 2 of 2

42 Page, (Dimensions: 56 inches x 35 inches)